HOW TO USE THIS MANUAL

IN00U–36

GENERAL INFORMATION

1. INDEX

An INDEX is provided on the first page of each section to guide you to the item to be repaired. To assist you in finding your way through the manual, the section title and major heading are given at the top of every page.

2. PRECAUTION

At the beginning of each section, a PRECAUTION is given that pertains to all repair operations contained in that section.

Read these precautions before starting any repair task.

3. TROUBLESHOOTING

TROUBLESHOOTING tables are included for each system to help you diagnose the problem and find the cause. The fundamentals of how to proceed with troubleshooting are described on page IN–17.

Be sure to read this before performing troubleshooting.

4. PREPARATION

Preparation lists the SST (Special Service Tools), recommended tools, equipment, lubricant and SSM (Special Service Materials) which should be prepared before beginning the operation and explains the purpose of each one.

5. REPAIR PROCEDURES

Most repair operations begin with an overview illustration. It identifies the components and shows how the parts fit together.

Example:

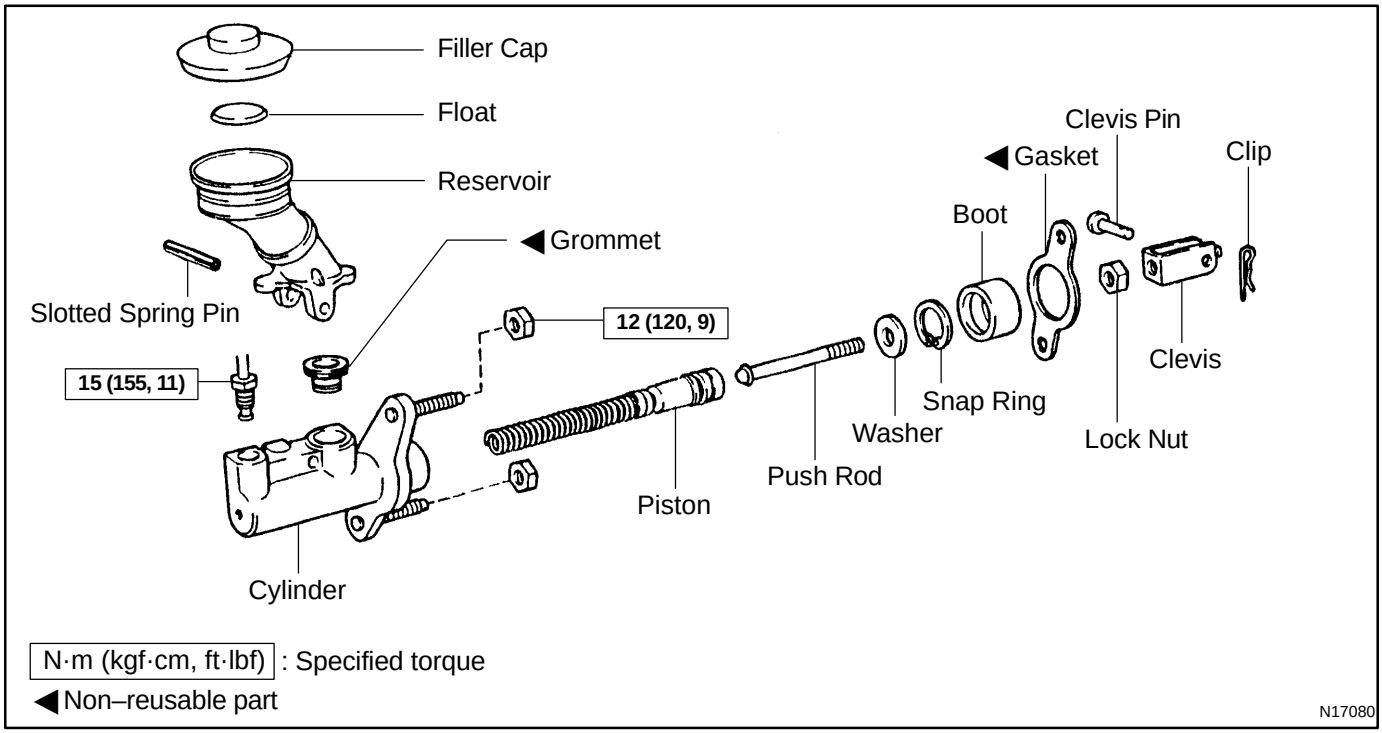

The procedures are presented in a step–by–step format:

- ▲ The illustration shows what to do and where to do it.
- ▲ The task heading tells what to do.
- ▲ The detailed text tells how to perform the task and gives other information such as specifications and warnings.

Example:

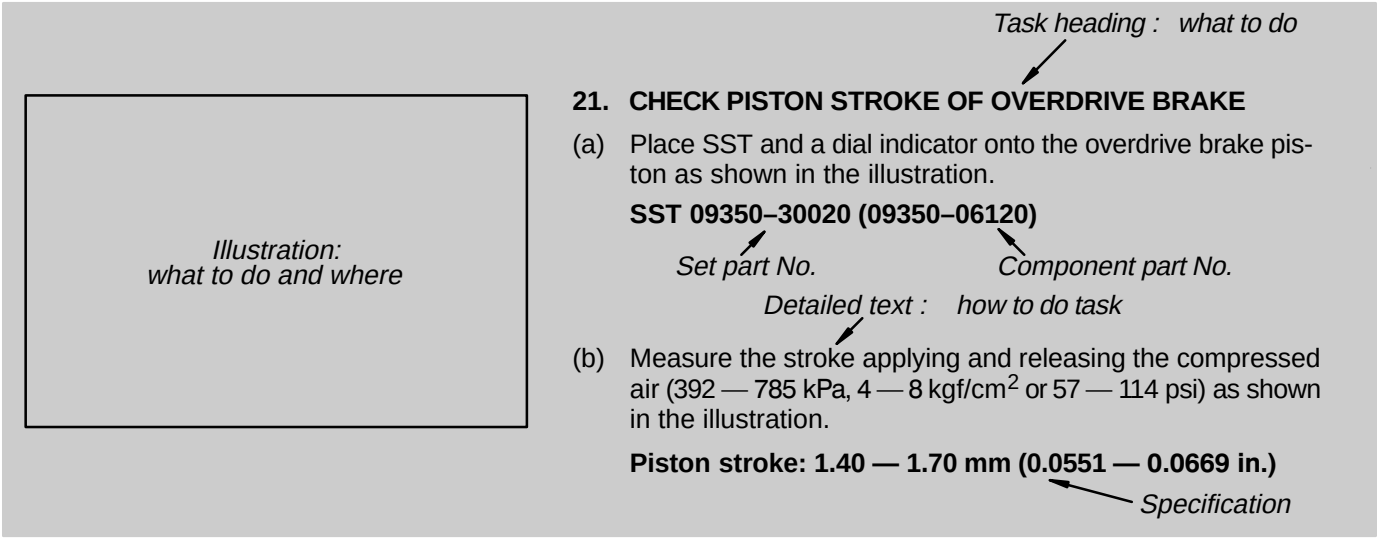

This format provides the experienced technician with a FAST TRACK to the information needed. The upper case task heading can be read at a glance when necessary, and the text below it provides detailed information. Important specifications and warnings always stand out in bold type.

6. REFERENCES

References have been kept to a minimum. However, when they are required you are given the page to refer to.

7. SPECIFICATIONS

Specifications are presented in bold type throughout the text where needed. You never have to leave the procedure to look up your specifications. They are also found in Service Specifications section for quick reference.

8. CAUTIONS, NOTICES, HINTS:

- ▲ CAUTIONS are presented in bold type, and indicate there is a possibility of injury to you or other people.
- ▲ NOTICES are also presented in bold type, and indicate the possibility of damage to the components being repaired.
- ▲ HINTS are separated from the text but do not appear in bold. They provide additional information to help you perform the repair efficiently.

9. SI UNIT

The UNITS given in this manual are primarily expressed according to the SI UNIT (International System of Unit), and alternately expressed in the metric system and in the English System.

Example:

Torque: 30 N·m (310 kgf·cm, 22 ft·lbf)

IDENTIFICATION INFORMATION

IN01P–04

VEHICLE IDENTIFICATION AND ENGINE SERIAL NUMBER

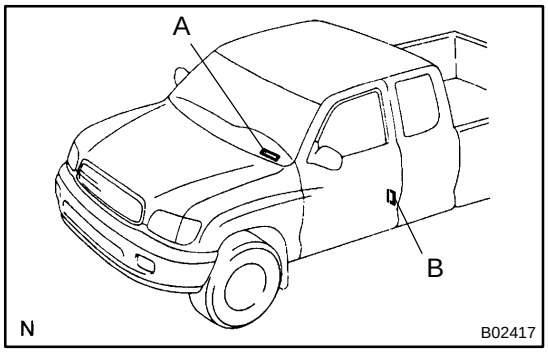

1. VEHICLE IDENTIFICATION NUMBER

The vehicle identification number is stamped on the vehicle identification number plate and certification label.

A: Vehicle Identification Number Plate

B: Certification Label

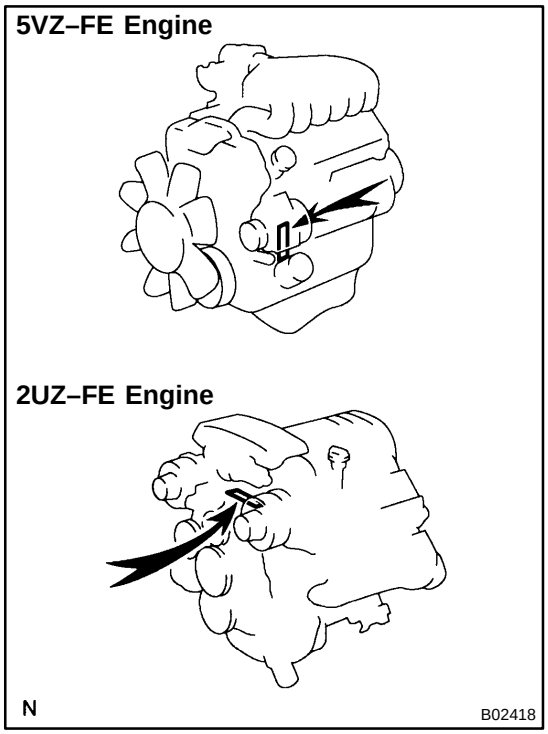

2. ENGINE SERIAL NUMBER

The engine serial number is stamped on the engine block, as shown in the illustration.

REPAIR INSTRUCTIONS

IN0CO–12

GENERAL INFORMATION

BASIC REPAIR HINT

(a) Use fender, seat and floor covers to keep the vehicle clean and prevent damage.

(b) During disassembly, keep parts in the appropriate order to facilitate reassembly.

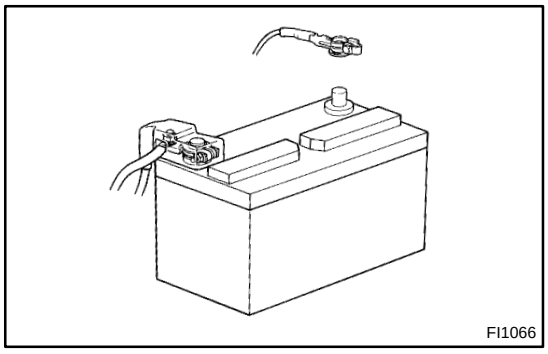
FI1066

(c) Installation and removal of battery terminal:
  (1) Before performing electrical work, disconnect the negative (–) terminal cable from the battery.
  (2) If it is necessary to disconnect the battery for inspection or repair, first disconnect the negative (–) terminal cable.
  (3) When disconnecting the terminal cable, to prevent damage to battery terminal, loosen the cable nut and raise the cable straight up without twisting or prying it.
  (4) Clean the battery terminals and cable ends with a clean shop rag. Do not scrape them with a file or other abrasive objects.
  (5) Install the cable ends to the battery terminals after loosening the nut, and tighten the nut after installation. Do not use a hammer to tap the cable ends onto the terminals.
  (6) Be sure the cover for the positive (+) terminal is properly in place.

(d) Check hose and wiring connectors to make sure that they are connected securely and correctly.

(e) Non–reusable parts
  (1) Always replace cotter pins, gaskets, O–rings, oil seals, etc. with new ones.
  (2) Non–reusable parts are indicated in the component illustrations by the ” ” symbol.

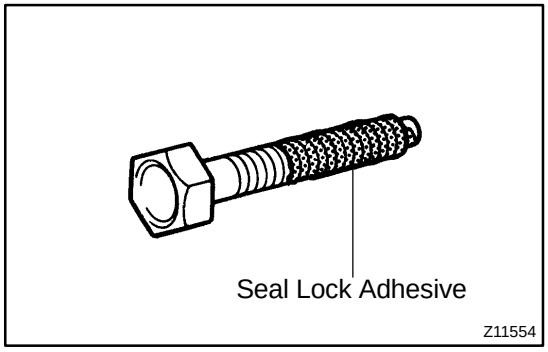

Z11554

(f) Precoated parts
Precoated parts are bolts, nuts, etc. that are coated with a seal lock adhesive at the factory.
  (1) If a precoated part is retightened, loosened or caused to move in any way, it must be recoated with the specified adhesive.
  (2) When reusing precoated parts, clean off the old adhesive and dry with compressed air. Then apply the specified seal lock adhesive to the bolt, nut or threads.

(3) Precoated parts are indicated in the component illustrations by the "▲" symbol.

(g) When necessary, use a sealer on gaskets to prevent leaks.

(h) Carefully observe all specifications for bolt tightening torques. Always use a torque wrench.

(i) Use of special service tools (SST) and special service materials (SSM) may be required, depending on the nature of the repair. Be sure to use SST and SSM where specified and follow the proper work procedure. A list of SST and SSM can be found in Preparation section in this manual.

Medium Current Fuse and High Current Fuse Equal Amperage Rating

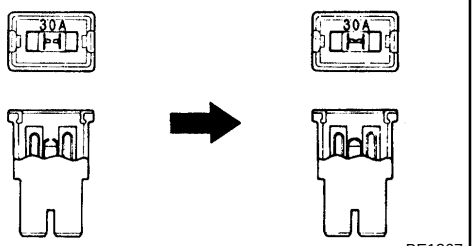

BE1367

(j) When replacing fuses, be sure the new fuse has the correct amperage rating. DO NOT exceed the rating or use one with a lower rating.

Illustration	Symbol	Part Name	Abbreviation
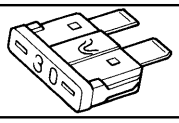 BE5594	 IN0365	FUSE	FUSE
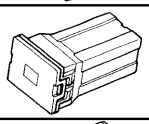 BE5595	 IN0366	MEDIUM CURRENT FUSE	M–FUSE
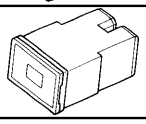 BE5596	 IN0367	HIGH CURRENT FUSE	H–FUSE
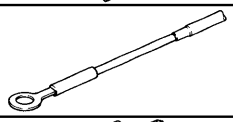 BE5597	 IN0367	FUSIBLE LINK	FL
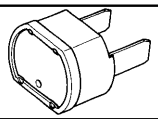 BE5598	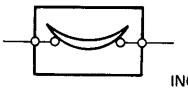 IN0368	CIRCUIT BREAKER	CB

V00076

(k) Care must be taken when jacking up and supporting the vehicle. Be sure to lift and support the vehicle at the proper locations (See page IN–8).

- ◀ Cancel the parking brake on the level place and shift the transmission in Neutral (or N position).
- ◀ When jacking up the front wheels of the vehicle at first place stoppers behind the rear wheels.
- ◀ When jacking up the rear wheels of the vehicle at first place stoppers before the front wheels.
- ◀ When either the front or rear wheels only should be jacked up, set rigid racks and place stoppers in front and behind the other wheels on the ground.
- ◀ After the vehicle is jacked up, be sure to support it on rigid racks . It is extremely dangerous to do any work on a vehicle raised on a jack alone, even for a small job that can be finished quickly.

(l) Observe the following precautions to avoid damage to the following parts:

(1) Do not open the cover or case of the ECU unless absolutely necessary. (If the IC terminals are touched, the IC may be destroyed by static electricity.)

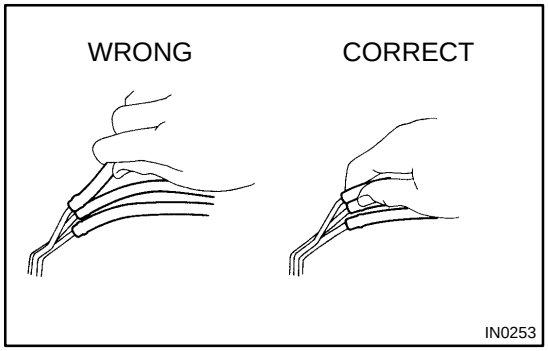

(2) To disconnect vacuum hoses, pull off the end, not the middle of the hose.

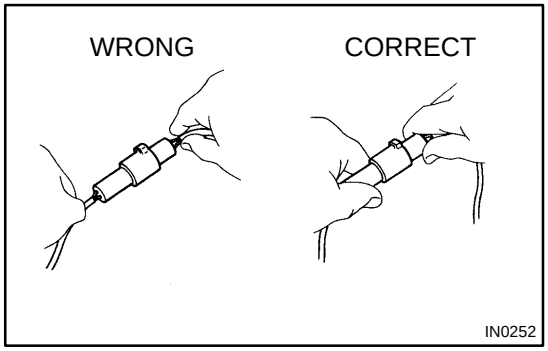

(3) To pull apart electrical connectors, pull on the connector itself, not the wires.

(4) Be careful not to drop electrical components, such as sensors or relays. If they are dropped on a hard floor, they should be replaced and not reused.

(5) When steam cleaning an engine, protect the electronic components, air filter and emission–related components from water.

(6) Never use an impact wrench to remove or install temperature switches or temperature sensors.

(7) When checking continuity at the wire connector, insert the tester probe carefully to prevent terminals from bending.

(8) When using a vacuum gauge, never force the hose onto a connector that is too large. Use a step–down adapter for adjustment. Once the hose has been stretched, it may leak air.

Example

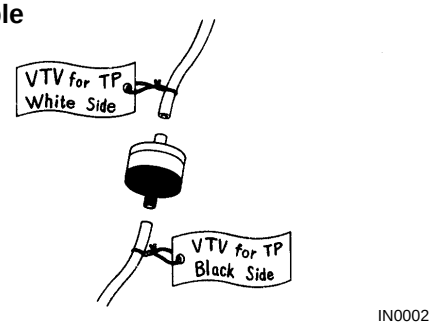

(m) Installation and removal of vacuum hose:

(1) When disconnecting vacuum hoses, use tags to identify how they should be reconnected to.

(2) After completing a job, double check that the vacuum hoses are properly connected. A label under the hood shows the proper layout.

(n) Unless otherwise stated, all resistance is measured at an ambient temperature of 20˚C (68˚F). Because the resistance may be outside specifications if measured at high temperatures immediately after the vehicle has been running, measurement should be made when the engine has cooled down.

IN0DY–01

VEHICLE LIFT AND SUPPORT LOCATIONS

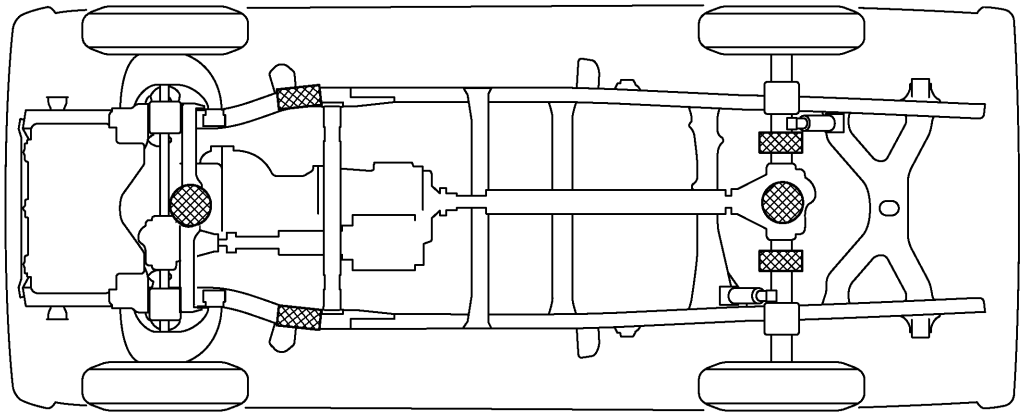

JACK POSITION

Front ◀ ◀ ◀ ◀ ◀ ◀ ◀ ◀ ◀ Center of crossmember

Rear ◀ ◀ ◀ ◀ ◀ ◀ ◀ ◀ ◀ Center of rear axle housing

SUPPORT POSITION

Safety stand

T

B07972

FOR ALL OF VEHICLES

IN0DB–04

PRECAUTION

1. FOR VEHICLES EQUIPPED WITH SRS AIRBAG AND SEAT BELT PRETENSIONER

(a) The TOYOTA TUNDRA is equipped with an SRS (Supplemental Restraint System), such as the driver airbag, front passenger airbag assembly and seat belt pretensioner.

Failure to carry out service operations in the correct sequence could cause the supplemental restraint system to unexpectedly deploy during servicing, possibly leading to a serious accident.

Further, if a mistake is made in servicing the supplemental restraint system, it is possible the SRS may fail to operate when required. Before servicing (including removal or installation of parts, inspection or replacement), be sure to read the following items carefully, then follow the correct procedure described in this manual.

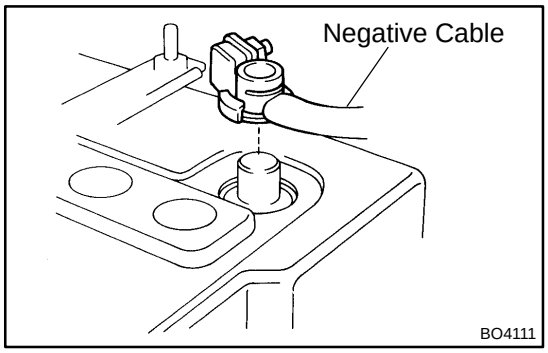

(b) GENERAL NOTICE

(1) Malfunction symptoms of the supplemental restraint system are difficult to confirm, so the diagnostic trouble codes become the most important source of information when troubleshooting. When troubleshooting the supplemental restraint system, always inspect the diagnostic trouble codes before disconnecting the battery (See page DI–490).

(2) Work must be started after 90 seconds from the time the ignition switch is turned to the ”LOCK” position and the negative (–) terminal cable is disconnected from the battery.

(The supplemental restraint system is equipped with a back–up power source so that if work is started within 90 seconds of disconnecting the negative (–) terminal cable from the battery, the SRS may deploy.)

When the negative (–) terminal cable is disconnected from the battery, memory of the clock and audio systems will be cancelled. So before starting work, make a record of the contents memorized by the each memory system. Then when work is finished, reset the clock and audio systems as before.

To avoid erasing the memory of each memory system, never use a back–up power supply from another battery.

(3) Even in cases of a minor collision where the SRS does not deploy, the steering wheel pad (See page RS–12), front passenger airbag assembly (See page RS–26) and seat belt pretensioner (See page BO–140) should be inspected.
(4) Never use SRS parts from another vehicle. When replacing parts, replace them with new parts.
(5) Before repairs, remove the airbag sensor if shocks are likely to be applied to the sensor during repairs.
(6) Never disassemble and repair the airbag sensor assembly, steering wheel pad, front passenger airbag assembly or seat belt pretensioner.
(7) If the airbag sensor assembly, steering wheel pad, front passenger airbag assembly or seat belt pretensioner has been dropped, or if there are cracks, dents or other defects in the case, bracket or connector, replace them with new ones.
(8) Do not directly expose the airbag sensor assembly, steering wheel pad, front passenger airbag assembly or seat belt pretensioner to hot air or flames.
(9) Use a volt/ohmmeter with high impedance (10 kΩ/V minimum) for troubleshooting of the electrical circuit.
(10) Information labels are attached to the periphery of the SRS components. Follow the instructions on the notices.
(11) After work on the supplemental restraint system is completed, check the SRS warning light (See page DI–490).

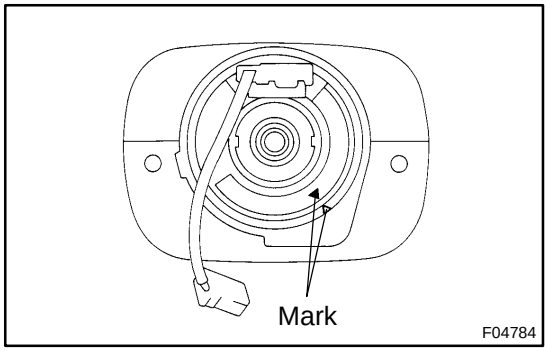

(c) SPIRAL CABLE (in Combination Switch)
The steering wheel must be fitted correctly to the steering column with the spiral cable at the neutral position, otherwise cable disconnection and other troubles may result. Refer to SR–28 concerning correct steering wheel installation.

(d) STEERING WHEEL PAD (with Airbag)

(1) When removing the steering wheel pad or handling a new steering wheel pad, it should be placed with the pad top surface facing up.
Storing the pad with its metallic surface upward may lead to a serious accident if the airbag inflates for some reason. In addition do not store a steering wheel pad on top of another one.

(2) Never measure the resistance of the airbag squib. (This may cause the airbag to deploy, which is very dangerous.)

(3) Grease should not be applied to the steering wheel pad and the pad should not be cleaned with detergents of any kind.

(4) Store the steering wheel pad where the ambient temperature remains below 93˚C (200˚F), without high humidity and away from electrical noise.

(5) When using electric welding, first disconnect the airbag connector (yellow color and 2 pins) under the steering column near the combination switch connector before starting work.

(6) When disposing of a vehicle or the steering wheel pad alone, the airbag should be deployed using an SST before disposal (See page RS–14).
Perform the operation in a safe place away from electrical noise.

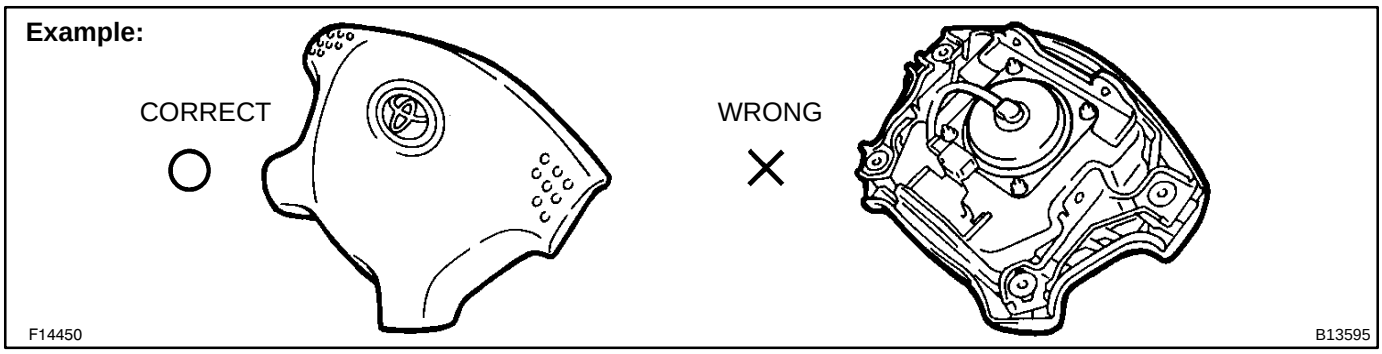

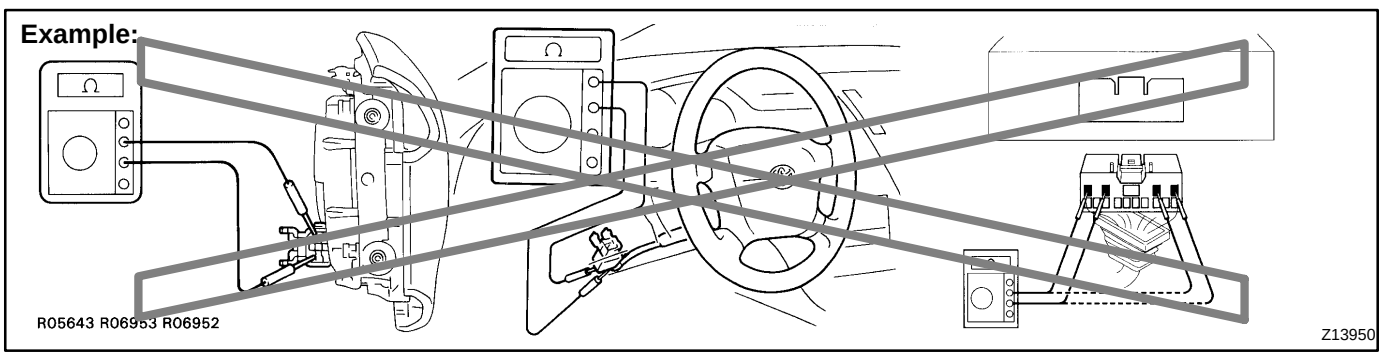

(e) FRONT PASSENGER AIRBAG ASSEMBLY

(1) Always store a removed or new front passenger airbag assembly with the airbag deployment direction facing up.
Storing the airbag assembly with the airbag deployment direction facing down could cause a serious accident if the airbag deploys.

(2) Never measure the resistance of the airbag squib. (This may cause the airbag to deploy, which is very dangerous.)

(3) Grease should not be applied to the front passenger airbag assembly and the airbag door should not be cleaned with detergents of any kind.

(4) Store the airbag assembly where the ambient temperature remains below 93˚C (200˚F), without high humidity and away from electrical noise.

(5) When using electric welding, first disconnect the airbag connector (yellow color and 2 pins) installed on assembly before starting work.

(6) When disposing of a vehicle or the airbag assembly alone, the airbag should be deployed using an SST before disposal (See page RS–27).
Perform the operation in a safe place away from electrical noise.

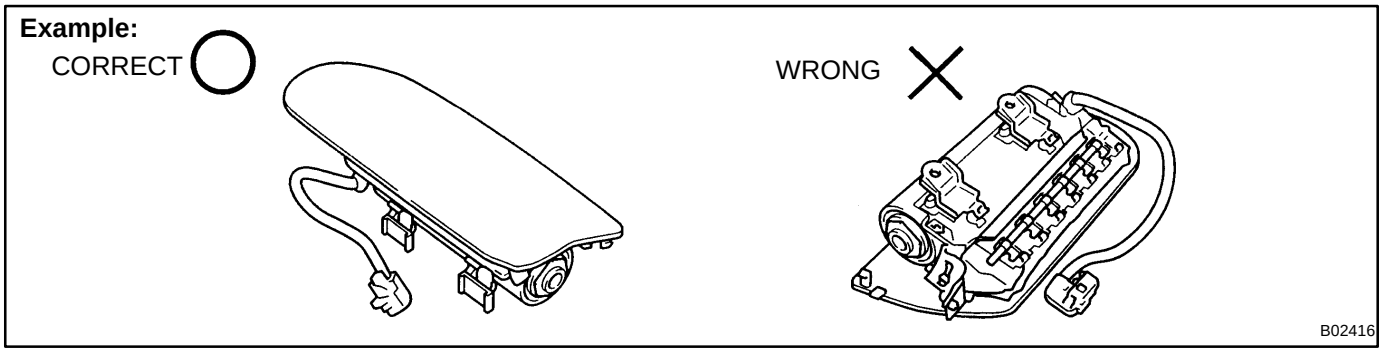

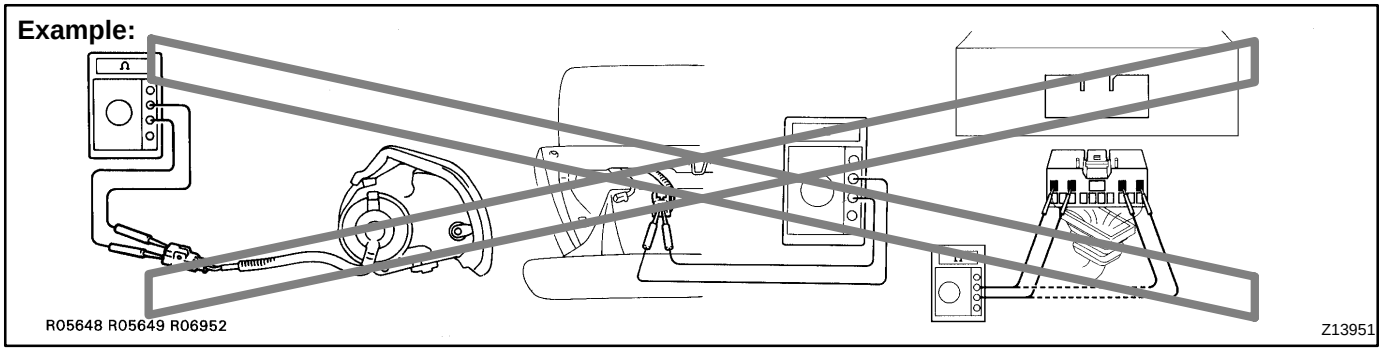

(f) SEAT BELT PRETENSIONER

(1) Never measure the resistance of the seat belt pretensioner. (This may cause the seat belt pretensioner activation which is very dangerous.)

(2) Never disassemble the seat belt pretensioner.

(3) Never install the seat belt pretensioner in another vehicle.

(4) Store the seat belt pretensioner where the ambient temperature remains below 80°C (176°F) and away from electrical noise without high humidity.

(5) When using electric welding, first disconnect the connector (yellow color and 2 pins) before starting work.

(6) When disposing of a vehicle or the seat belt pretensioner alone, the seat belt pretensioner should be activated before disposal (See page BO–142). Perform the operation in a safe place away from electrical noise.

(7) The seat belt pretensioner is hot after activation, so let it cool down sufficiently before the disposal. However never apply water to the seat belt pretensioner.

Example:

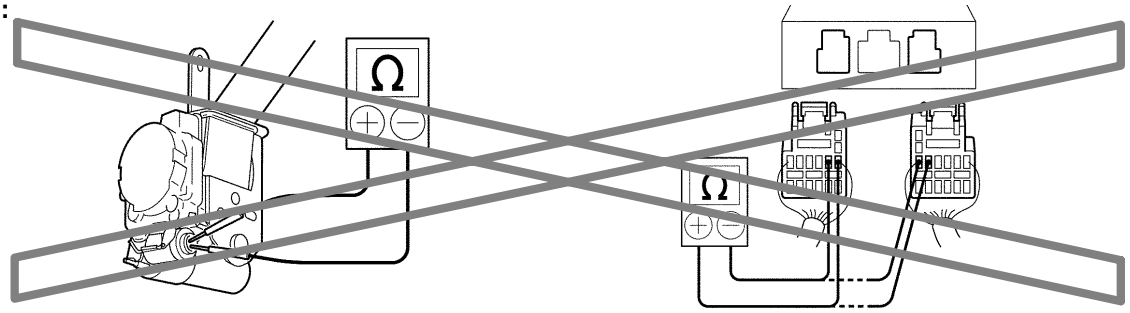

B02121

(g) AIRBAG SENSOR ASSEMBLY

(1) Never reuse the airbag sensor assembly involved in a collision when the SRS has deployed.

(2) The connectors to the airbag sensor assembly should be connected or disconnected with the sensor mounted on the floor. If the connectors are connected or disconnected while the airbag sensor assembly is not mounted to the floor, it could cause undesired ignition of the supplemental restraint system.

(3) Work must be started after 90 seconds from the time the ignition switch is turned to the ”LOCK” position and the negative (–) terminal cable is disconnected from the battery, even if only loosening the set bolts of the airbag sensor assembly.

(h) WIRE HARNESS AND CONNECTOR

The SRS wire harness is integrated with the cowl wire harness assembly and floor wire harness assembly. All the connectors for the system are also a standard yellow color. If the SRS wire harness becomes disconnected or the connector becomes broken due to an accident, etc., repair or replace it.

2. FOR VEHICLES EQUIPPED WITH A CATALYTIC CONVERTER

CAUTION:

If large amount of unburned gasoline flows into the converter, it may overheat and create a fire hazard. To prevent this, observe the following precautions and explain them to your customer.

(a) Use only unleaded gasoline.

(b) Avoid prolonged idling.
Avoid running the engine at idle speed for more than 20 minutes.

(c) Avoid spark jump test.
  (1) Perform spark jump test only when absolutely necessary. Perform this test as rapidly as possible.
  (2) While testing, never race the engine.

(d) Avoid prolonged engine compression measurement.
Engine compression tests must be done as rapidly as possible.

(e) Do not run engine when fuel tank is nearly empty.
This may cause the engine to misfire and create an extra load on the converter.

(f) Avoid coasting with ignition turned off.

(g) Do not dispose of used catalyst along with parts contaminated with gasoline or oil.

3. IF VEHICLE IS EQUIPPED WITH MOBILE COMMUNICATION SYSTEM

For vehicles with mobile communication systems such as two–way radios and cellular telephones, observe the following precautions.

(1) Install the antenna as far as possible away from the ECU and sensors of the vehicle's electronic system.

(2) Install the antenna feeder at least 20 cm (7.87 in.) away from the ECU and sensors of the vehicle's electronic systems. For details about ECU and sensors locations, refer to the section on the applicable component.

(3) Do not wind the antenna feeder together with the other wiring as much as possible, also avoid running the antenna feeder parallel with other wire harness.

(4) Check that the antenna and feeder are correctly adjusted.

(5) Do not install powerful mobile communications system.

4. FOR USING OBD II SCAN TOOL OR TOYOTA HAND–HELD TESTER

CAUTION:

Observe the following for safety reasons:

- **Before using the OBD II scan tool or TOYOTA hand–held tester, the OBD II scan tool's instruction book or TOYOTA hand–held tester's operator manual should be read thoroughly.**
- **Be sure to route all cables securely when driving with the OBD II scan tool or TOYOTA hand–held tester connected to the vehicle. (i.e. Keep cables away from feet, pedals, steering wheel and shift lever.)**
- **Two persons are required when test driving with the OBD II scan tool or TOYOTA hand–held tester, one person to drive the vehicle and one person to operate the OBD II scan tool or TOYOTA hand–held tester.**

HOW TO TROUBLESHOOT ECU CONTROLLED SYSTEMS

IN01T–12

GENERAL INFORMATION

A large number of ECU controlled systems are used in the TOYOTA TUNDRA. In general, the ECU controlled system is considered to be a very intricate system requiring a high level of technical knowledge and expert skill to troubleshoot. However, the fact is that if you proceed to inspect the circuits one by one, troubleshooting of these systems is not complex. If you have adequate understanding of the system and a basic knowledge of electricity, accurate diagnosis and necessary repair can be performed to locate and fix the problem. This manual is designed through emphasis of the above standpoint to help service technicians perform accurate and effective troubleshooting, and is compiled for the following major ECU controlled systems:

The troubleshooting procedure and how to make use of it are described on the following pages.

System	Page
1. Engine (5VZ–FE)	DI–1
2. Engine (2UZ–FE)	DI–192
3. Automatic Transmission (A340E, A340F)	DI–382
4. Anti–Lock Brake System	DI–446
5. Supplemental Restraint System	DI–488
6. TOYOTA Vehicle Intrusion Protection System	DI–592
7. Cruise Control System (5VZ–FE)	DI–638
8. Cruise Control System (2UZ–FE)	DI–662

FOR USING OBD II SCAN TOOL OR HAND–HELD TESTER

▲ Before using the scan tool or tester, the scan tool's instruction book or tester's operator manual should be read thoroughly.

▲ If the scan tool or tester cannot communicate with ECU controlled systems when you have connected the cable of the scan tool or tester to DLC3, turned the ignition switch ON and operated the scan tool, there is a problem on the vehicle side or tool side.

(1) If communication is normal when the tool is connected to another vehicle, inspect the diagnosis data link line (Bus＜line) or ECU power circuit of the vehicle.

(2) If communication is still not possible when the tool is connected to another vehicle, the problem is probably in the tool itself, so perform the Self Test procedures outline in the Tester Operator's Manual.

IN01U–06

HOW TO PROCEED WITH TROUBLESHOOTING

Carry out troubleshooting in accordance with the procedure on the following page. Here, only the basic procedure is shown. Details are provided in Diagnostics section, showing the most effective methods for each circuit. Confirm the troubleshooting procedures first for the relevant circuit before beginning troubleshooting of that circuit.

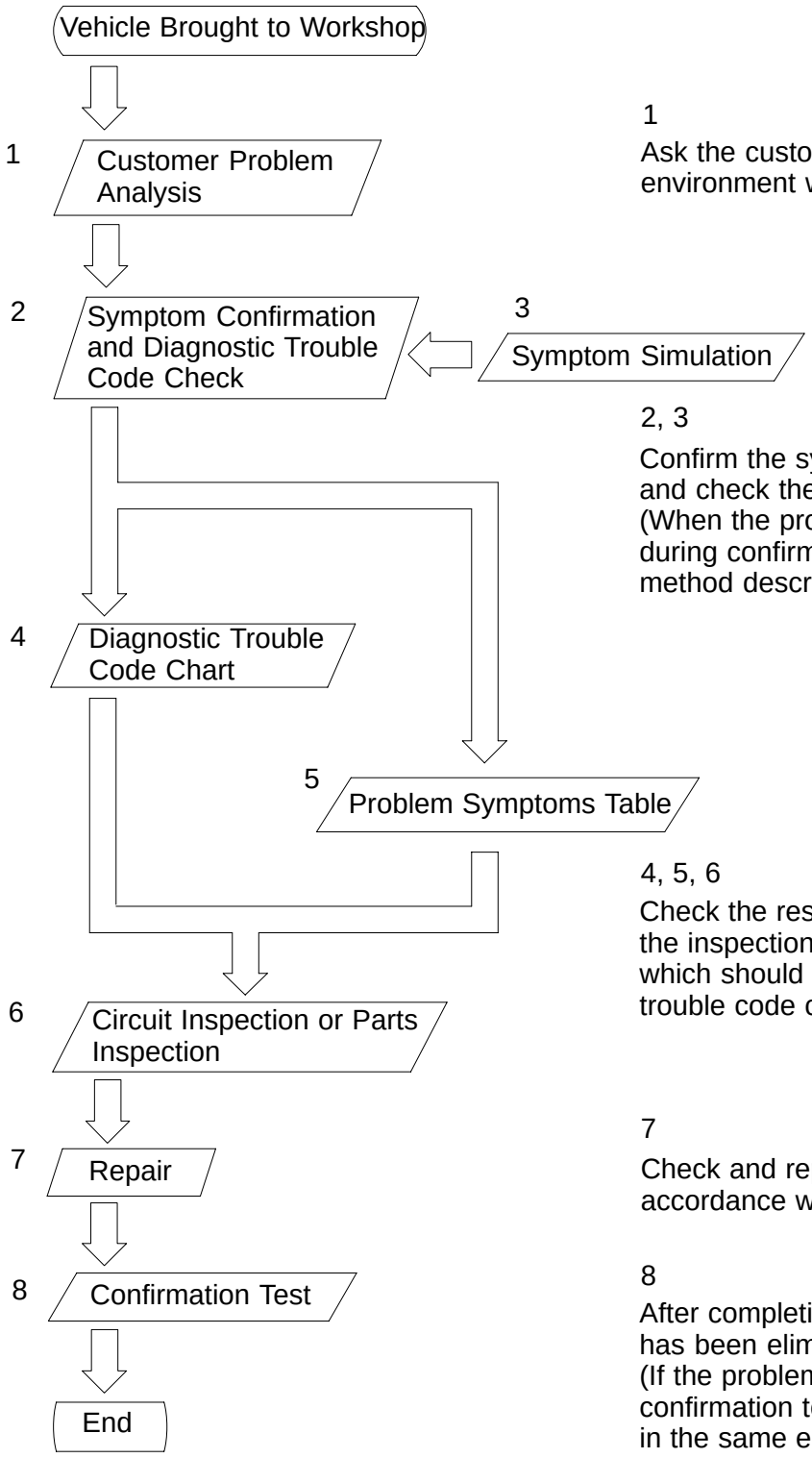

1

Ask the customer about the conditions and the environment when the problem occurred.

2, 3

Confirm the symptoms and the problem conditions, and check the diagnostic trouble codes.
(When the problem symptoms do not appear during confirmation, use the symptom simulation method described later on.)

4, 5, 6

Check the results obtained in Step 2, then confirm the inspection procedure for the system or the part which should be checked using the diagnostic trouble code chart or the problem symptoms table.

7

Check and repair the affected system or part in accordance with the instructions in Step 6.

8

After completing repairs, confirm that the problem has been eliminated.
(If the problem is not reproduced, perform the confirmation test under the same conditions and in the same environment as when it occurred for the first time.)

1. CUSTOMER PROBLEM ANALYSIS

In troubleshooting, the problem symptoms must be confirmed accurately and all preconceptions must be cleared away in order to give an accurate judgment. To ascertain just what the problem symptoms are, it is extremely important to ask the customer about the problem and the conditions at the time it occurred.

Important Point in the Problem Analysis:

The following 5 items are important points in the problem analysis. Past problems which are thought to be unrelated and the repair history, etc. may also help in some cases, so as much information as possible should be gathered and its relationship with the problem symptoms should be correctly ascertained for reference in troubleshooting. A customer problem analysis table is provided in Diagnostics section for each system for your use.

Important Points in the Customer Problem Analysis

▲What ——— Vehicle model, system name
▲When ——— Date, time, occurrence frequency
▲Where ——— Road conditions
▲Under what conditions? ——— Running conditions, driving conditions, weather conditions
▲How did it happen? ——— Problem symptoms

(Sample) Engine control system check sheet.

CUSTOMER PROBLEM ANALYSIS CHECK

ENGINE CONTROL SYSTEM Check Sheet

Inspector's Name _____

Customer's Name		**Model and Model Year**	
Driver's Name		**Frame No.**	
Data Vehicle Brought in		**Engine Model**	
License No.		**Odometer Reading**	km miles

Problem Symptoms	☐ **Engine does not Start**	☐ **Engine does not crank** ☐ **No initial combustion** ☐ **No complete combustion**
	☐ **Difficult to Start**	☐ **Engine cranks slowly** ☐ **Other** _____
	☐ **Poor Idling**	☐ **Incorrect first idle** ☐ **Idling rpm is abnormal** ☐ **High (rpm)** ☐ **Low (rpm)** ☐ **Rough idling** ☐ **Other** _____
	☐ **Poor Drive ability**	☐ **Hesitation** ☐ **Back fire** ☐ **Muffler explosion (after–fire)** ☐ **Surging** ☐ **Knocking** ☐ **Other** _____
	☐ **Engine Stall**	☐ **Soon after starting** ☐ **After accelerator pedal depressed** ☐ **After accelerator pedal released** ☐ **During A/C operation** ☐ **Shifting from N to D** ☐ **Other** _____
	☐ **Others**	

☐ **Constant** ☐ **Sometimes (times per day/month)**

2. SYMPTOM CONFIRMATION AND DIAGNOSTIC TROUBLE CODE CHECK

The diagnostic system in the TOYOTA TUNDRA fulfills various functions. The first function is the Diagnostic Trouble Code Check in which a malfunction in the signal circuits to the ECU is stored in code in the ECU memory at the time of occurrence, to be output by the technician during troubleshooting. Another function is the Input Signal Check which checks if the signals from various switches are sent to the ECU correctly. By using these check functions, the problem areas can be narrowed down quickly and troubleshooting can be performed effectively. Diagnostic functions are incorporated in the following systems in the TOYOTA TUNDRA.

System	Diagnostic Trouble Code Check	Input Signal Check (Sensor Check)	Diagnostic Test Mode (Active Test)
1. Engine (5VZ–FE)	◀ (with Check Mode)	◀	◀
2. Engine (2UZ–FE)	◀ (with Check Mode)	◀	◀
3. Automatic Transmission	◀ (with Check Mode)	◀	
4. Anti–Lock Brake System	◀	◀	
5. Supplemental Restraint System	◀		
6. Cruise Control System (5VZ–FE)	◀		
7. Cruise Control System (2UZ–FE)	◀	◀	

In diagnostic trouble code check, it is very important to determine whether the problem indicated by the diagnostic trouble code is still occurring or occurred in the past but returned to normal at present. In addition, it must be checked in the problem symptom check whether the malfunction indicated by the diagnostic trouble code is directly related to the problem symptom or not. For this reason, the diagnostic trouble codes should be checked before and after the symptom confirmation to determine the current conditions, as shown in the table below. If this is not done, it may, depending on the case, result in unnecessary troubleshooting for normally operating systems, thus making it more difficult to locate the problem, or in repairs not pertinent to the problem. Therefore, always follow the procedure in correct order and perform the diagnostic trouble code check.

DIAGNOSTIC TROUBLE CODE CHECK PROCEDURE

Diagnostic Trouble Code Check (Make a note of and then clear)	**Confirmation of Symptoms**	**Diagnostic Trouble Code Check**	**Problem Condition**
Diagnostic Trouble Code Display	Problem symptoms exist	Same diagnostic trouble code is displayed	Problem is still occurring in the diagnostic circuit
⇨		Normal code is displayed	The problem is still occurring in a place other than in the diagnostic circuit (The diagnostic trouble code displayed first is either for a past problem or it is a secondary problem)
⇨	No problem symptoms exist		The problem occurred in the diagnostic circuit in the past
Normal Code Display ⇨	Problem symptoms exist	Normal code is displayed	The problem is still occurring in a place other than in the diagnostic circuit
⇨	No problem symptoms exist	Normal code is displayed	The problem occurred in a place other than in the diagnostic circuit in the past

Taking into account the points on the previous page, a flow chart showing how to proceed with troubleshooting using the diagnostic trouble code check is shown below. This flow chart shows how to utilize the diagnostic trouble code check effectively, then by carefully checking the results, indicates how to proceed either to diagnostic trouble code troubleshooting or to troubleshooting of problem symptoms table.

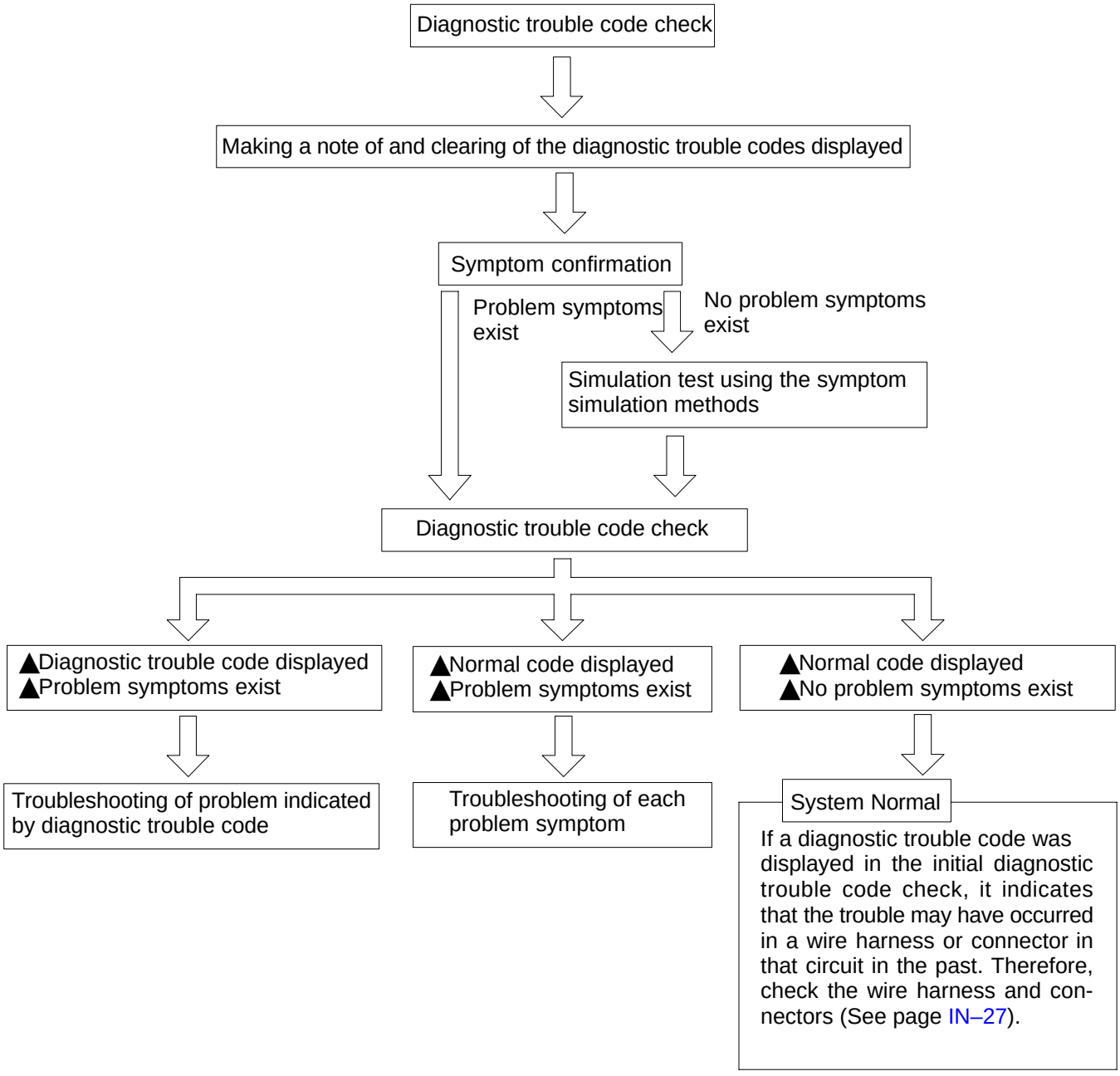

3. SYMPTOM SIMULATION

The most difficult case in troubleshooting is when there are no problem symptoms occurring. In such cases, a thorough customer problem analysis must be carried out, then simulate the same or similar conditions and environment in which the problem occurred in the customer's vehicle. No matter how much experience a technician has, or how skilled he may be, if he proceeds to troubleshoot without confirming the problem symptoms he will tend to overlook something important in the repair operation and make a wrong guess somewhere, which will only lead to a standstill. For example, for a problem which only occurs when the engine is cold, or for a problem which occurs due to vibration caused by the road during driving, etc., the problem can never be determined so long as the symptoms are confirmed with the engine hot condition or the vehicle at a standstill. Since vibration, heat or water penetration (moisture) is likely cause for problem which is difficult to reproduce, the symptom simulation tests introduced here are effective measures in that the external causes are applied to the vehicle in a stopped condition.

Important Points in the Symptom Simulation Test:

In the symptom simulation test, the problem symptoms should of course be confirmed, but the problem area or parts must also be found out. To do this, narrow down the possible problem circuits according to the symptoms before starting this test and connect a tester beforehand. After that, carry out the symptom simulation test, judging whether the circuit being tested is defective or normal and also confirming the problem symptoms at the same time. Refer to the problem symptoms table for each system to narrow down the possible causes of the symptom.

1	**VIBRATION METHOD: When vibration seems to be the major cause.**
CONNECTORS Slightly shake the connector vertically and horizontally. **WIRE HARNESS** Slightly shake the wire harness vertically and horizontally. The connector joint, fulcrum of the vibration, and body through portion are the major areas to be checked thoroughly.	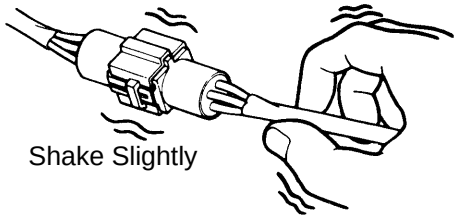 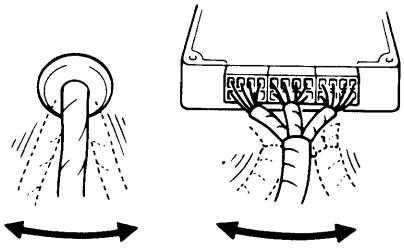 FI2331 FI2332
PARTS AND SENSOR Apply slight vibration with a finger to the part of the sensor considered to be the problem cause and check that the malfunction occurs. HINT: Applying strong vibration to relays may result in open relays.	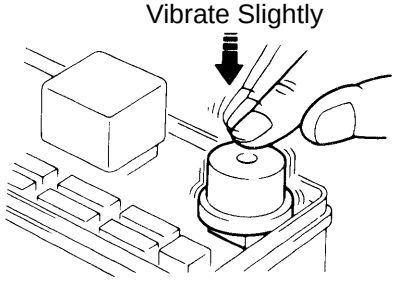 FI2330

V07268

2	HEAT METHOD: When the problem seems to occur when the suspect area is heated.

Heat the component that is the likely cause of the malfunction with a hair dryer or similar object. Check to see if the malfunction occurs.

NOTICE:

(1) Do not heat to more than 60˚C (140˚F). (Temperature is limited not to damage the components.)

(2) Do not apply heat directly to parts in the ECU.

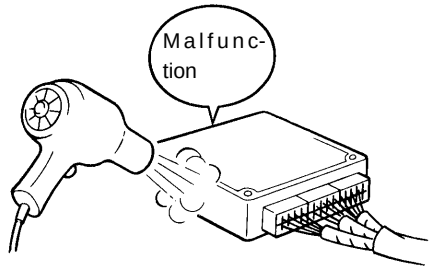

FI2334

3	WATER SPRINKLING METHOD: When the malfunction seems to occur on a rainy day or in a high–humidity condition.

Sprinkle water onto the vehicle and check to see if the malfunction occurs.

NOTICE:

(1) Never sprinkle water directly into the engine compartment, but indirectly change the temperature and humidity by applying water spray onto the radiator front surface.

(2) Never apply water directly onto the electronic components.

HINT:

If a vehicle is subject to water leakage, the leaked water may contaminate the ECU. When testing a vehicle with a water leakage problem, special caution must be taken.



FI6649

4	OTHER: When a malfunction seems to occur when electrical load is excessive.

Turn on all electrical loads including the heater blower, head lights, rear window defogger, etc. and check to see if the malfunction occurs.

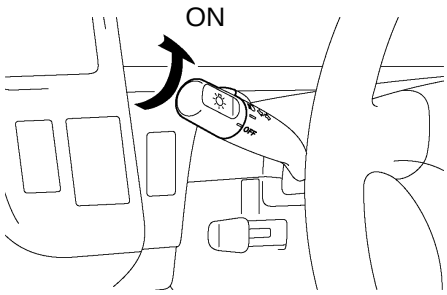

B02389

B02390

4. DIAGNOSTIC TROUBLE CODE CHART

The inspection procedure is shown in the table below. This table permits efficient and accurate troubleshooting using the diagnostic trouble codes displayed in the diagnostic trouble code check. Proceed with troubleshooting in accordance with the inspection procedure given in the diagnostic chart corresponding to the diagnostic trouble codes displayed. The engine diagnostic trouble code chart is shown below as an example.

▲DTC No.
Indicates the diagnostic trouble code.
▲Page or Instructions
Indicates the page where the inspection procedure for each circuit is to be found, or gives instructions for checking and repairs.

▲Trouble Area
Indicates the suspect area of the problem.

▲Detection Item
Indicates the system of the problem or contents of the problem.

DIAGNOSTIC TROUBLE CODE CHART

HINT:
Parameters listed in the chart may not be exactly the same as your reading due to the type of instrument or other factors.

If a malfunction code is displayed during the DTC check mode, check the circuit for the code listed in the table below. For details of each code, turn to the page referred to under the ”See page” for the respective ”DTC No.” in the DTC chart.

SAE CONTROLLED

DTC No. (See page)	Detection Item	Trouble Area	MIL*	Memory
P0100 (DI–24)	Mass Air Flow Circuit Malfunction	▲Open or short in mass air flow meter circuit ▲Mass air flow meter ▲ECM	○	○
P0101 (DI–28)	Mass Air Flow Circuit Range/ Performance Problem	▲Mass air flow meter	○	○
P0110 (DI–29)	Intake Air Temp. Circuit Malfunction	▲Open or short in intake air temp. sensor circuit ▲Intake air temp. sensor ▲ECM	○	○
P0115 (DI–33)	Engine Coolant Temp. Circuit Malfunction	▲Open or short in engine coolant temp. sensor circuit ▲Engine coolant temp. sensor ▲ECM	○	○
P0116 (DI–37)	Engine Coolant Temp. Circuit Range/ Performance Problem	▲Engine coolant temp. sensor ▲Cooling system	○	○
	/ Pedal Position Sensor/Switch nction	▲Open or short in throttle position sensor circuit ▲Throttle position sensor ▲ECM		
	osition Sensor/ Switch rformance Prob-	▲Throttle position sensor		

5. PROBLEM SYMPTOMS TABLE

The suspected circuits or parts for each problem symptom are shown in the table below. Use this table to troubleshoot the problem when a ”Normal” code is displayed in the diagnostic trouble code check but the problem is still occurring. Numbers in the table indicate the inspection order in which the circuits or parts should be checked.

HINT:

When the problem is not detected by the diagnostic system even though the problem symptom is present, it is considered that the problem is occurring outside the detection range of the diagnostic system, or that the problem is occurring in a system other than the diagnostic system.

▲Page
Indicates the page where the flow chart for each circuit is located.

▲Circuit Inspection, Inspection Order
Indicates the circuit which needs to be checked for each problem symptom. Check in the order indicated by the numbers.

▲Problem Symptom

▲Circuit or Part Name
Indicates the circuit or part which needs to be checked.

PROBLEM SYMPTOMS TABLE

Symptom	Suspected Area	See page
Engine does not crank (Does not start)	1. Starter and starter relay	ST–2 ST–17
No initial combustion (Does not start)	1. ECM power source circuit 2. Fuel pump control circuit 3. ECM	DI–147 DI–151 IN–29
No complete combustion (Does not start)	1. Fuel pump control circuit	DI–151
Engine cranks normally (Difficult to start)	1. Starter signal circuit 2. Fuel pump control circuit 3. Compression	DI–144 DI–151 EM–3
Cold engine (Difficult to start)	1. Starter signal circuit 2. Fuel pump control circuit	DI–144 DI–151
Hot engine	1. Starter signal circuit 2. Fuel pump control circuit	DI–144 DI–151
idle speed (Poor idling)	1. A/C signal circuit (Compressor circuit) 2. ECM power source circuit	AC–88
ling)	1. A/C signal circuit 2. Fuel pump control circuit	
	1. Compression 2. Fuel pump control circuit	

6. CIRCUIT INSPECTION

How to read and use each page is shown below.

▲Diagnostic Trouble Code No. and Detection Item

▲Circuit Description
The major role and operation, etc. of the circuit and its component parts are explained.

DTC	P0325	Knock Sensor 1 Circuit Malfunction

CIRCUIT DESCRIPTION

Knock sensor is fitted to the cylinder block to detect engine knocking. This sensor contains a piezoelectric element which generates a voltage when it becomes deformed, which occurs when the cylinder block vibrates due to knocking. If engine knocking occurs, ignition timing is retarded to suppress it.

DTC No.	DTC Detection Condition	Trouble Area
P0325	No knock sensor 1 signal to ECM with engine speed, 1,200 rpm or more.	▲Open or short in knock sensor1 circuit ▲Knock sensor 1 (looseness) ▲ECM

If the ECM detects the above diagnosis conditions, it operates the fail safe function in which the corrective retard angle value is set to the maximum value.

▲Indicates the diagnostic trouble code, diagnostic trouble code set parameter and suspect area of the problem.

WIRING DIAGRAM

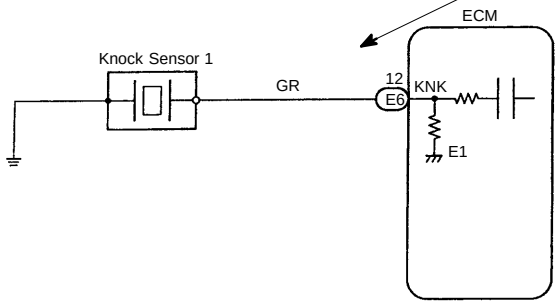

▲Wiring Diagram
This shows a wiring diagram of the circuit.
Use this diagram together with ELECTRICAL WIRING DIAGRAM to thoroughly understand the circuit.
Wire colors are indicated by an alphabetical code.
B = Black, L = Blue, R = Red, BR = Brown,
LG = Light Green, V = Violet, G = Green,
O = Orange, W = White, GR = Gray, P = Pink,
Y = Yellow, SB = Sky Blue
The first letter indicates the basic wire color and the second letter indicates the color of the stripe.

V08423

▲Indicates the position of the ignition switch during the check.

LOCK
Ignition Switch LOCK (OFF)

ON
Ignition Switch ON

START
Ignition Switch START

ACC
Ignition Switch ACC

▲Inspection Procedure
Use the inspection procedure to determine if the circuit is normal or abnormal, and, if it is abnormal, use it to determine whether the problem is located in the sensors, actuators, wire harness or ECU.

INSPECTION PROCEDURE

1	**Check continuity between terminal KNK of ECM connector and body ground.**

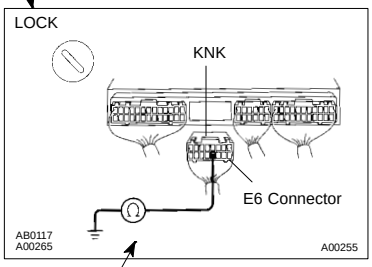

PREPARATION:
(a) Remove the glove compartment (See page SF–68).
(b) Disconnect the E6 connector from the ECM.

CHECK:
Measure the resistance between terminal KNK of the ECM connector and body ground.

OK:
Resistance: 1 MΩ or higher

OK	**Go to step 3.**

NG

2	**Check knock sensor (See page SF–61).**

OK	**Replace knock sensor.**

▲Indicates the place to check the voltage or resistance.
▲Indicates the connector position to checked, from the front or back side.

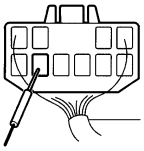

Check from the connector back side. (with harness)

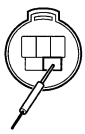

Check from the connector front side. (without harness)
In this case, care must be taken not to bend the terminals.

▲Indicates the condition of the connector of ECU during the check.

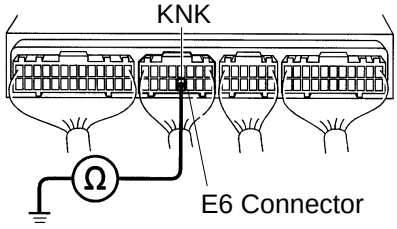

Connector being checked is connected.

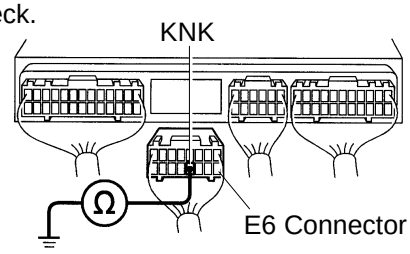

Connector being checked is disconnected.

V08425

IN05X–13

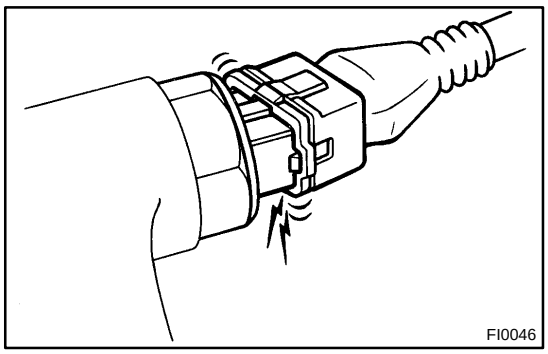
FI0046

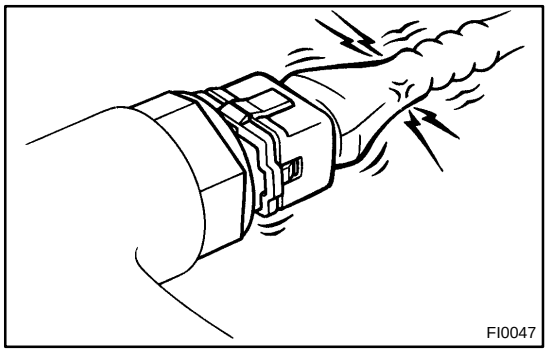
FI0047

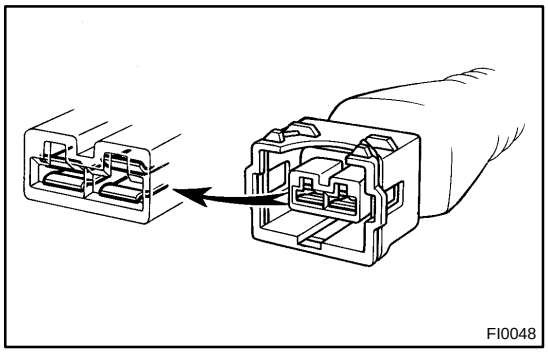
FI0048

HOW TO USE THE DIAGNOSTIC CHART AND INSPECTION PROCEDURE

1. CONNECTOR CONNECTION AND TERMINAL INSPECTION

- For troubleshooting, diagnostic trouble code charts or problem symptom table are provided for each circuit with detailed inspection procedures on the following pages.
- When all the component parts, wire harnesses and connectors of each circuit except the ECU are found to be normal in troubleshooting, then it is determined that the problem is in the ECU. Accordingly, if diagnosis is performed without the problem symptoms occurring, refer to Step 8 to replace the ECU. So always confirm that the problem symptoms are occurring, or proceed with inspection while using the symptom simulation method.
- The instructions ”Check wire harness and connector” and ”Check and replace ECU” which appear in the inspection procedure, are common and applicable to all diagnostic trouble codes. Follow the procedure outlined below whenever these instructions appear.

OPEN CIRCUIT:

This could be due to a disconnected wire harness, faulty contact in the connector, a connector terminal pulled out, etc.

HINT:

- It is rarely the case that a wire is broken in the middle of it. Most cases occur at the connector. In particular, carefully check the connectors of sensors and actuators
- Faulty contact could be due to rusting of the connector terminals, to foreign materials entering terminals or a deformation of connector terminals. Simply disconnecting and reconnecting the connectors once changes the condition of the connection and may result in a return to normal operation. Therefore, in troubleshooting, if no abnormality is found in the wire harness and connector check, but the problem disappears after the check, then the cause is considered to be in the wire harness or connectors.

SHORT CIRCUIT:

This could be due to a contact between wire harness and the body ground or to a short circuit occurred inside the switch, etc.

HINT:

When there is a short circuit between the wire harness and body ground, check thoroughly whether the wire harness is caught in the body or is clamped properly.

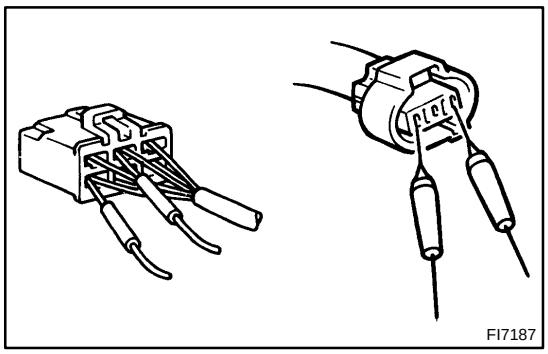

2. CONNECTOR HANDLING

When inserting tester probes into a connector, insert them from the rear of the connector. When necessary, use mini test leads. For water resistant connectors which cannot be accessed from behind, take good care not to deform the connector terminals.

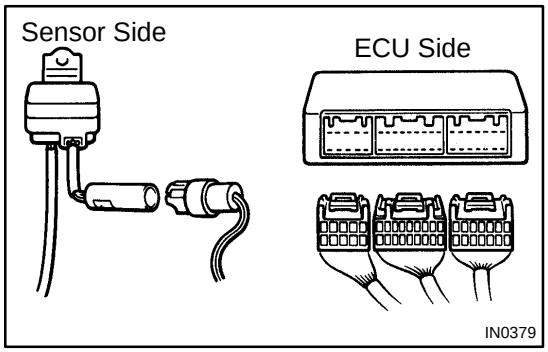

3. CONTINUITY CHECK (OPEN CIRCUIT CHECK)

(a) Disconnect the connectors at both ECU and sensor sides.

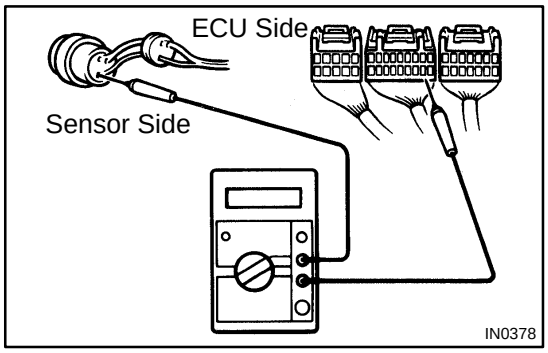

(b) Measure the resistance between the applicable terminals of the connectors.

Resistance: 1 Ω or less

HINT:

Measure the resistance while lightly shaking the wire harness vertically and horizontally.

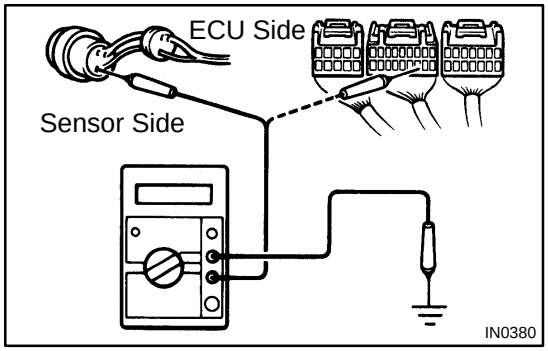

4. RESISTANCE CHECK (SHORT CIRCUIT CHECK)

(a) Disconnect the connectors on both ends.

(b) Measure the resistance between the applicable terminals of the connectors and body ground. Be sure to carry out this check on the connectors on both ends.

Resistance: 1 MΩ or higher

HINT:

Measure the resistance while lightly shaking the wire harness vertically and horizontally.

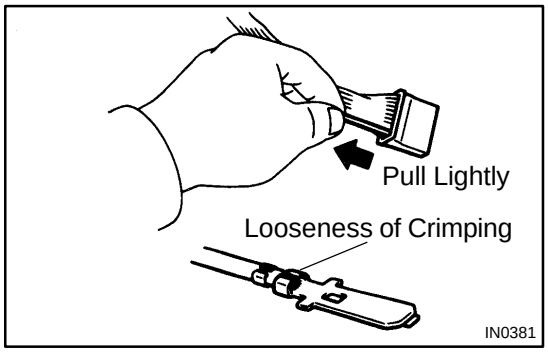

5. VISUAL CHECK AND CONTACT PRESSURE CHECK

(a) Disconnect the connectors at both ends.

(b) Check for rust or foreign material, etc. in the terminals of the connectors.

(c) Check crimped portions for looseness or damage and check that the terminals are secured in lock portion.

HINT:

The terminals should not come out when pulled lightly from the back.

(d) Prepare a test male terminal and insert it in the female terminal, then pull it out.

NOTICE:

When testing a gold–plated female terminal, always use a gold–plated male terminal.

HINT:

When the test terminal is pulled out more easily than others, there may be poor contact in that section.

Fig. 1

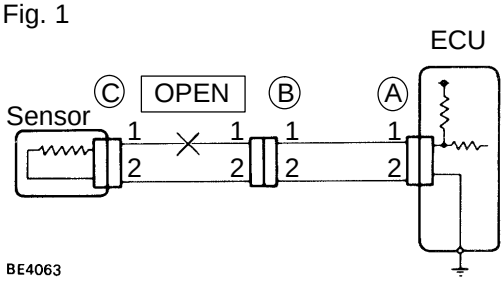

6. CHECK OPEN CIRCUIT

For the open circuit in the wire harness in Fig. 1, perform "(a) Continuity Check" or "(b) Voltage Check" to locate the section.

Fig. 2

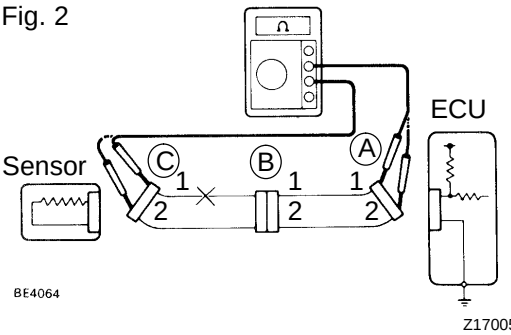

(a) Check the continuity.

(1) Disconnect connectors "A" and "C" and measure the resistance between them.

In the case of Fig. 2:

Between terminal 1 of connector "A" and terminal 1 of connector "C" → No continuity (open)

Between terminal 2 of connector "A" and terminal 2 of connector "C" → Continuity

Therefore, it is found out that there is an open circuit between terminal 1 of connector "A" and terminal 1 of connector "C".

Fig. 3

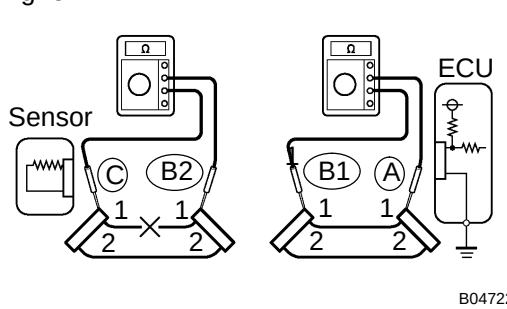

(2) Disconnect connector "B" and measure the resistance between the connectors.

In the case of Fig. 3:

Between terminal 1 of connector "A" and terminal 1 of connector "B1" → Continuity

Between terminal 1 of connector "B2" and terminal 1 of connector "C" → No continuity (open)

Therefore, it is found out that there is an open circuit between terminal 1 of connector "B2" and terminal 1 of connector "C".

Fig. 4

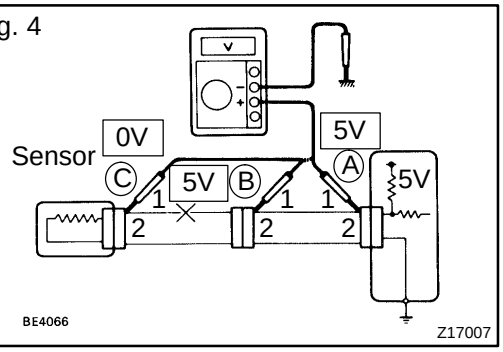

(b) Check the voltage.

In a circuit in which voltage is applied (to the ECU connector terminal), an open circuit can be checked for by conducting a voltage check.

As shown in Fig. 4, with each connector still connected, measure the voltage between body ground and terminal 1 of connector ”A” at the ECU 5V output terminal, terminal 1 of connector ”B”, and terminal 1 of connector ”C”, in that order.

If the results are:

5V: Between Terminal 1 of connector ”A” and Body Ground
5V: Between Terminal 1 of connector ”B” and Body Ground
0V: Between Terminal 1 of connector ”C” and Body Ground

Then it is found out that there is an open circuit in the wire harness between terminal 1 of ”B” and terminal 1 of ”C”.

Fig. 5

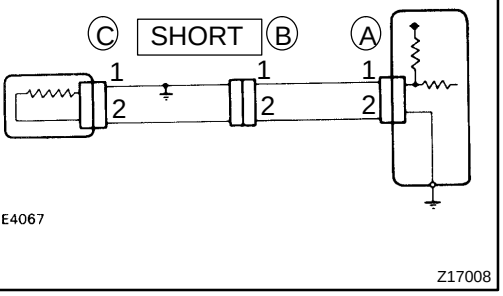

7. CHECK SHORT CIRCUIT

If the wire harness is ground shorted as in Fig. 5, locate the section by conducting a ”continuity check with ground”.

Fig. 6

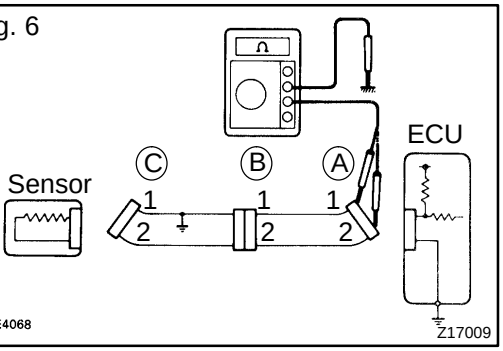

Check the continuity with ground.

(1) Disconnect connectors ”A” and ”C” and measure the resistance between terminal 1 and 2 of connector ”A” and body ground.

In the case of Fig. 6:

Between terminal 1 of connector ”A” and body ground → Continuity (short)

Between terminal 2 of connector ”A” and body ground → No continuity

Therefore, it is found out that there is a short circuit between terminal 1 of connector ”A” and terminal 1 of connector ”C”.

Fig. 7

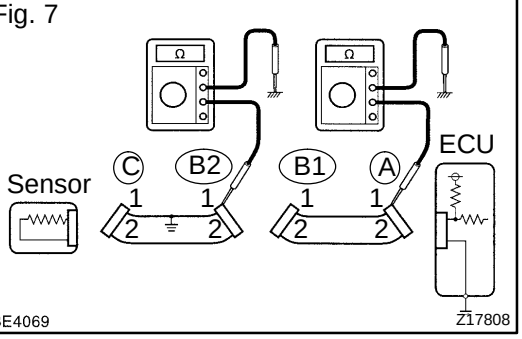

(2) Disconnect connector ”B” and measure the resistance between terminal 1 of connector ”A” and body ground, and terminal 1 of connector ”B2” and body ground.
In the case of Fig. 7:
Between terminal 1 of connector ”A” and body ground → No continuity
Between terminal 1 of connector ”B2” and body ground → Continuity (short)
Therefore, it is found out that there is a short circuit between terminal 1 of connector ”B2” and terminal 1 of connector ”C”.

8. CHECK AND REPLACE ECU

First check the ECU ground circuit. If it is faulty, repair it. If it is normal, the ECU could be faulty, so replace the ECU with a normal functioning one and check that the symptoms appear.

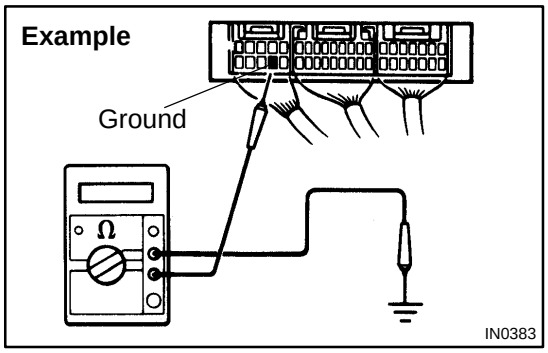

(1) Measure the resistance between the ECU ground terminal and the body ground.

Resistance: 1 Ω or less

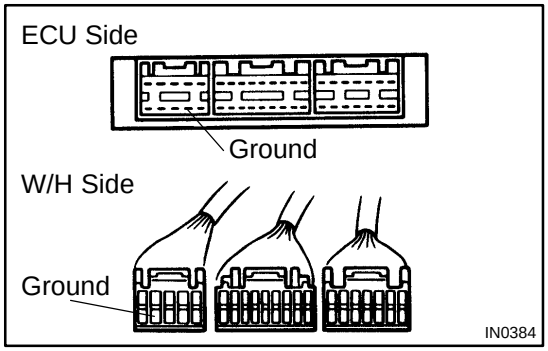

(2) Disconnect the ECU connector, check the ground terminals on the ECU side and the wire harness side for bend and check the contact pressure.

TERMS

ABBREVIATIONS USED IN THIS MANUAL

IN04Q–07

Abbreviations	Meaning
ABS	Anti–Lock Brake System
AC	Alternating Current
ACC	Accessory
ACIS	Acoustic Control Induction System
ACSD	Automatic Cold Start Device
A.D.D.	Automatic Disconnecting Differential
A/F	Air–Fuel Ratio
AHC	Active Height Control Suspension
ALR	Automatic Locking Retractor
ALT	Alternator
AMP	Amplifier
ANT	Antenna
APPROX.	Approximately
A/T	Automatic Transmission (Transaxle)
ATF	Automatic Transmission Fluid
AUTO	Automatic
AUX	Auxiliary
AVG	Average
AVS	Adaptive Variable Suspension
BA	Brake Assist
BACS	Boost Altitude Compensation System
BAT	Battery
BDC	Bottom Dead Center
B/L	Bi–Level
B/S	Bore–Stroke Ratio
BTDC	Before Top Dead Center
BVSV	Bimetallic Vacuum Switching Valve
Calif.	California
CB	Circuit Breaker
CCo	Catalytic Converter For Oxidation
CD	Compact Disc
CF	Cornering Force
CG	Center Of Gravity
CH	Channel
COMB.	Combination
CPE	Coupe
CPS	Combustion Pressure Sensor
CPU	Central Processing Unit
CRS	Child Restraint System
CTR	Center
C/V	Check Valve
CV	Control Valve

CW	Curb Weight
DC	Direct Current
DEF	Defogger
DFL	Deflector
DIFF.	Differential
DIFF. LOCK	Differential Lock
D/INJ	Direct Injection
DLI	Distributorless Ignition
DOHC	Double Over Head Cam
DP	Dash Pot
DS	Dead Soak
DSP	Digital Signal Processor
EBD	Electronic Brake Force Distribution
ECAM	Engine Control And Measurement System
ECD	Electronic Controlled Diesel
ECDY	Eddy Current Dynamometer
ECU	Electronic Control Unit
ED	Electro–Deposited Coating
EDIC	Electric Diesel Injection Control
EDU	Electronic Driving Unit
EFI	Electronic Fuel Injection
E/G	Engine
EGR–VM	Exhaust Gas Recirculation–Vacuum Modulator
ELR	Emergency Locking Retractor
ENG	Engine
ESA	Electronic Spark Advance
ETCS	Electronic Throttle Control System
EVP	Evaporator
E–VRV	Electric Vacuum Regulating Valve
EXH	Exhaust
FE	Fuel Economy
FF	Front–Engine Front–Wheel–Drive
F/G	Fuel Gage
FIPG	Formed In Place Gasket
FL	Fusible Link
F/P	Fuel Pump
FPU	Fuel Pressure Up
Fr	Front
FR	Front–Engine Rear–Wheel–Drive
F/W	Flywheel
FW/D	Flywheel Damper
FWD	Front–Wheel–Drive
GAS	Gasoline
GSA	Gear Shift Actuator
GND	Ground
HAC	High Altitude Compensator

H/B	Hatchback
H–FUSE	High Current Fuse
HI	High
HID	High Intensity Discharge (Head Lamp)
HPU	Hydraulic Power Unit
HSG	Housing
HT	Hard Top
HWS	Heated Windshield System
IAC	Idle Air Control
IC	Integrated circuit
IDI	Indirect Diesel Injection
IFS	Independent Front Suspension
IG	Ignition
IIA	Integrated Ignition Assembly
IN	Intake (Manifold, Valve)
INT	Intermittent
I/P	Instrument Panel
IRS	Independent Rear Suspension
J/B	Junction Block
J/C	Junction Connector
KD	Kick–Down
LAN	Local Area Network
LB	Liftback
LCD	Liquid Crystal Display
LED	Light Emitting Diode
LH	Left–Hand
LHD	Left–Hand Drive
L/H/W	Length, Height, Width
LLC	Long–Life Coolant
LNG	Liquified Natural Gas
LO	Low
LPG	Liquified Petroleum Gas
LSD	Limited Slip Differential
LSP & PV	Load Sensing Proportioning And Bypass Valve
LSPV	Load Sensing Proportioning Valve
MAX.	Maximum
M–FUSE	Medium Current Fuse
MIC	Microphone
MIL	Malfunction Indicator Lamp
MIN.	Minimum
MP	Multipurpose
MPX	Multiplex Communication System
M/T	Manual Transmission (Transaxle)
MT	Mount
MTG	Mounting
N	Neutral

NA	Natural Aspiration
No.	Number
O/D	Overdrive
OEM	Original Equipment Manufacturing
OHC	Overhead Camshaft
OHV	Overhead Valve
OPT	Option
O/S	Oversize
P & BV	Proportioning And Bypass Valve
PCS	Power Control System
PCV	Positive Crankcase Ventilation
PKB	Parking Brake
PPS	Progressive Power Steering
PS	Power Steering
PTO	Power Take–Off
R & P	Rack And Pinion
R/B	Relay Block
RBS	Recirculating Ball Type Steering
R/F	Reinforcement
RFS	Rigid Front Suspension
RH	Right–Hand
RHD	Right–Hand Drive
RLY	Relay
ROM	Read Only Memory
Rr	Rear
RR	Rear–Engine Rear–Wheel Drive
RRS	Rigid Rear Suspension
RWD	Rear–Wheel Drive
SDN	Sedan
SEN	Sensor
SICS	Starting Injection Control System
SMT	Sequential Manual Transmission
SOC	State Of Charge
SOHC	Single Overhead Camshaft
SPEC	Specification
SPI	Single Point Injection
SRS	Supplemental Restraint System
SSM	Special Service Materials
SST	Special Service Tools
STD	Standard
STJ	Cold–Start Fuel Injection
SW	Switch
SYS	System
T/A	Transaxle
TACH	Tachometer
TBI	Throttle Body Electronic Fuel Injection

TC	Turbocharger
TCCS	TOYOTA Computer–Controlled System
TCV	Timing Control Valve
TDC	Top Dead Center
TEMP.	Temperature
TEMS	TOYOTA Electronic Modulated Suspension
TIS	Total Information System For Vehicle Development
T/M	Transmission
TMC	TOYOTA Motor Corporation
TMMK	TOYOTA Motor Manufacturing Kentucky, Inc.
TRAC	Traction Control System
TURBO	Turbocharge
U/D	Underdrive
U/S	Undersize
VCV	Vacuum Control Valve
VENT	Ventilator
VIN	Vehicle Identification Number
VPS	Variable Power Steering
VSC	Vehicle Skid Control
VSV	Vacuum Switching Valve
VTV	Vacuum Transmitting Valve
w/	With
WGN	Wagon
W/H	Wire Harness
w/o	Without
1st	First
2nd	Second
2WD	Two Wheel Drive Vehicle (4x2)
4WD	Four Wheel Drive Vehicle (4x4)

IN0CI–02

GLOSSARY OF SAE AND TOYOTA TERMS

This glossary lists all SAE–J1930 terms and abbreviations used in this manual in compliance with SAE recommendations, as well as their TOYOTA equivalents.

SAE ABBREVIATIONS	SAE TERMS	TOYOTA TERMS ( )—ABBREVIATIONS
A/C	Air Conditioning	Air Conditioner
ACL	Air Cleaner	Air Cleaner, A/CL
AIR	Secondary Air Injection	Air Injection (AI)
AP	Accelerator Pedal	–
B+	Battery Positive Voltage	+B, Battery Voltage
BARO	Barometric Pressure	HAC
CAC	Charge Air Cooler	Intercooler
CARB	Carburetor	Carburetor
CFI	Continuous Fuel Injection	–
CKP	Crankshaft Position	Crank Angle
CL	Closed Loop	Closed Loop
CMP	Camshaft Position	Cam Angle
CPP	Clutch Pedal Position	–
CTOX	Continuous Trap Oxidizer	–
CTP	Closed Throttle Position	LL ON, Idle ON
DFI	Direct Fuel Injection (Diesel)	Direct Injection (DI)
DI	Distributor Ignition	–
DLC1 DLC2 DLC3	Data Link Connector 1 Data Link Connector 2 Data Link Connector 3	1: Check Connector 2: Total Diagnosis Comunication Link (TDCL) 3: OBD II Diagnostic Connector
DTC	Diagnostic Trouble Code	Diagnostic Code
DTM	Diagnostic Test Mode	–
ECL	Engine Control Level	–
ECM	Engine Control Module	Engine ECU (Electronic Control Unit)
ECT	Engine Coolant Temperature	Coolant Temperature, Water Temperature (THW)
EEPROM	Electrically Erasable Programmable Read Only Memory	Electrically Erasable Programmable Read Only Memory (EEPROM), Erasable Programmable Read Only Memory (EPROM)
EFE	Early Fuel Evaporation	Cold Mixture Heater (CMH), Heat Control Valve (HCV)
EGR	Exhaust Gas Recirculation	Exhaust Gas Recirculation (EGR)
EI	Electronic Ignition	TOYOTA Distributor–less Ignition (TDI)
EM	Engine Modification	Engine Modification (EM)
EPROM	Erasable Programmable Read Only Memory	Programmable Read Only Memory (PROM)
EVAP	Evaporative Emission	Evaporative Emission Control (EVAP)
FC	Fan Control	–
FEEPROM	Flash Electrically Erasable Programmable Read Only Memory	–
FEPROM	Flash Erasable Programmable Read Only Memory	–
FF	Flexible Fuel	–
FP	Fuel Pump	Fuel Pump
GEN	Generator	Alternator
GND	Ground	Ground (GND)

HO2S	Heated Oxygen Sensor	Heated Oxygen Sensor (HO_2S)
IAC	Idle Air Control	Idle Speed Control (ISC)
IAT	Intake Air Temperature	Intake or Inlet Air Temperature
ICM	Ignition Control Module	–
IFI	Indirect Fuel Injection	Indirect Injection (IDL)
IFS	Inertia Fuel–Shutoff	–
ISC	Idle Speed Control	–
KS	Knock Sensor	Knock Sensor
MAF	Mass Air Flow	Air Flow Meter
MAP	Manifold Absolute Pressure	Manifold Pressure Intake Vacuum
MC	Mixture Control	Electric Bleed Air Control Valve (EBCV) Mixture Control Valve (MCV) Electric Air Control Valve (EACV)
MDP	Manifold Differential Pressure	–
MFI	Multiport Fuel Injection	Electronic Fuel Injection (EFI)
MIL	Malfunction Indicator Lamp	Check Engine Lamp
MST	Manifold Surface Temperature	–
MVZ	Manifold Vacuum Zone	–
NVRAM	Non–Volatile Random Access Memory	–
O2S	Oxygen Sensor	Oxygen Sensor, O_2 Sensor (O_2S)
OBD	On–Board Diagnostic	On–Board Diagnostic System (OBD)
OC	Oxidation Catalytic Converter	Oxidation Catalyst Convert (OC), CCo
OP	Open Loop	Open Loop
PAIR	Pulsed Secondary Air Injection	Air Suction (AS)
PCM	Powertrain Control Module	–
PNP	Park/Neutral Position	–
PROM	Programmable Read Only Memory	–
PSP	Power Steering Pressure	–
PTOX	Periodic Trap Oxidizer	Diesel Particulate Filter (DPF) Diesel Particulate Trap (DPT)
RAM	Random Access Memory	Random Access Memory (RAM)
RM	Relay Module	–
ROM	Read Only Memory	Read Only Memory (ROM)
RPM	Engine Speed	Engine Speed
SC	Supercharger	Supercharger
SCB	Supercharger Bypass	E–ABV
SFI	Sequential Multiport Fuel Injection	Electronic Fuel Injection (EFI), Sequential Injection
SPL	Smoke Puff Limiter	–
SRI	Service Reminder Indicator	–
SRT	System Readiness Test	–
ST	Scan Tool	–
TB	Throttle Body	Throttle Body
TBI	Throttle Body Fuel Injection	Single Point Injection Central Fuel Injection (Ci)
TC	Turbocharger	Turbocharger
TCC	Torque Converter Clutch	Torque Converter

TCM	Transmission Control Module	Transmission ECU, ECT ECU
TP	Throttle Position	Throttle Position
TR	Transmission Range	–
TVV	Thermal Vacuum Valve	Bimetallic Vacuum Switching Valve (BVSV) Thermostatic Vacuum Switching Valve (TVSV)
TWC	Three–Way Catalytic Converter	Three–Way Catalytic (TWC) Manifold Converter CC_{RO}
TWC+OC	Three–Way + Oxidation Catalytic Converter	CC_R + CCo
VAF	Volume Air Flow	Air Flow Meter
VR	Voltage Regulator	Voltage Regulator
VSS	Vehicle Speed Sensor	Vehicle Speed Sensor
WOT	Wide Open Throttle	Full Throttle
WU–OC	Warm Up Oxidation Catalytic Converter	–
WU–TWC	Warm Up Three–Way Catalytic Converter	–
3GR	Third Gear	–
4GR	Fourth Gear	–

OUTSIDE VEHICLE

MA001–06

GENERAL MAINTENANCE

The owners are responsible for these maintenance and inspection items.
They can be done by the owner or they can have them done at a service shop.
These items include those which should be checked on a daily basis, those which, in most cases, do not require (special) tools and those which are considered to be reasonable for the owner to do.
Items and procedures for general maintenance are as follows.

1. GENERAL NOTES

- ▲ Maintenance items may vary from country to country. Check the owner's manual supplement in which the maintenance schedule is shown.
- ▲ Every service item in the periodic maintenance schedule must be performed.
- ▲ Periodic maintenance service must be performed according to whichever interval in the periodic maintenance schedule occurs first, the odometer reading (miles) or the time interval (months).
- ▲ Maintenance service after the last period should be performed at the same interval as before unless otherwise noted.
- ▲ Failure to do even one item can cause the engine to run poorly and increase exhaust emissions.

2. TIRES

(a) Check the pressure with a gauge.

If necessary, adjust.

(b) Check for cuts, damage or excessive wear.

3. WHEEL NUTS

When checking the tires, check the nuts for looseness or for missing nuts.
If necessary, tighten them.

4. TIRE ROTATION (See page SA–3)

Check the owner's manual supplement in which the maintenance schedule is shown.

5. WINDSHIELD WIPER BLADES

Check for wear or cracks whenever they do not wipe clean.
If necessary, replace.

6. FLUID LEAKS

(a) Check underneath for leaking fuel, oil, water or other fluid.
(b) If you smell gasoline fumes or notice any leak, have the cause found and corrected.

7. DOORS AND ENGINE HOOD

(a) Check that all doors and the tailgate operate smoothly, and that all latches lock securely.
(b) Check that the engine hood secondary latch secures the hood from opening when the primary latch is released.

INSIDE VEHICLE

MA002–38

GENERAL MAINTENANCE

The owners are responsible for these maintenance and inspection items.
They can be done by the owner or they can have them done at a service shop.
These items include those which should be checked on a daily basis, those which, in most cases, do not require (special) tools and those which are considered to be reasonable for the owner to do.
Items and procedures for general maintenance are as follows.

1. GENERAL NOTES

- ▲ Maintenance items may vary from country to country. Check the owner's manual supplement in which the maintenance schedule is shown.
- ▲ Every service item in the periodic maintenance schedule must be performed.
- ▲ Periodic maintenance service must be performed according to whichever interval in the periodic maintenance schedule occurs first, the odometer reading (miles) or the time interval (months).
- ▲ Maintenance service after the last period should be performed at the same interval as before unless otherwise noted.
- ▲ Failure to do even one item can cause the engine to run poorly and increase exhaust emissions.

2. LIGHTS

(a) Check that the headlights, stop lights, taillights, turn signal lights, and other lights are all working.
(b) Check the headlight aim.

3. WARNING LIGHTS AND BUZZERS

Check that all warning lights and buzzers function properly.

4. HORN

Check that it is working.

5. WINDSHIELD

Check for scratches, pits or abrasions.

6. WINDSHIELD WIPER AND WASHER

(a) Check operation of the wipers and washer.
(b) Check that the wipers do not streak.

7. WINDSHIELD DEFROSTER

Check that air comes out from the defroster outlet when operating the heater or air conditioner.

8. REAR VIEW MIRROR

Check that it is mounted securely.

9. SUN VISORS

Check that they move freely and are mounted securely.

10. STEERING WHEEL

Check that it has the specified freeplay. Be alert for changes in steering condition, such as hard steering, excessive freeplay or strange noises.

11. SEATS

(a) Check that the seat adjusters operate smoothly.
(b) Check that all latches lock securely in any position.
(c) Check that the head restraints move up and down smoothly and that the locks hold securely in any latch position.
(d) For fold–down seat backs, check that the latches lock securely.

12. SEAT BELTS

(a) Check that the seat belt system such as the buckles, retractors and anchors operate properly and smoothly.
(b) Check that the belt webbing is not cut, frayed, worn or damaged.

13. ACCELERATOR PEDAL

Check the pedal for smooth operation and uneven pedal effort or catching.

14. CLUTCH PEDAL (See page CL–2)

(a) Check the pedal for smooth operation.

(b) Check that the pedal has the proper free play.

15. BRAKE PEDAL (See page BR–6)

(a) Check the pedal for smooth operation.

(b) Check that the pedal has the proper reserve distance and free play.

(c) Check the brake booster function.

16. BRAKES

At a safe place, check that the brakes do not pull to one side when applied.

17. PARKING BRAKE (See page BR–13)

(a) Check that the lever has the proper travel.

(b) On a safe incline, check that the vehicle is held securely with only the parking brake applied.

18. AUTOMATIC TRANSMISSION ”PARK” MECHANISM

(a) Check the lock release button of the selector lever for proper and smooth operation.

(b) On a safe incline, check that the vehicle is held securely with the selector lever in P position and all brakes released.

UNDER HOOD

MA003–05

GENERAL MAINTENANCE

1. GENERAL NOTES

▲ Maintenance items may vary from country to country. Check the owner's manual supplement in which the maintenance schedule is shown.
▲ Every service item in the periodic maintenance schedule must be performed.
▲ Periodic maintenance service must be performed according to whichever interval in the periodic maintenance schedule occurs first, the odometer reading (miles) or the time interval (months).
▲ Maintenance service after the last period should be performed at the same interval as before unless otherwise noted.
▲ Failure to do even one item can cause the engine to run poorly and increase exhaust emissions.

2. WINDSHIELD WASHER FLUID

Check that there is sufficient fluid in the tank.

3. ENGINE COOLANT LEVEL

Check that the coolant level is between the FULL and LOW lines on the see–through reservoir.

4. RADIATOR AND HOSES

(a) Check that the front of the radiator is clean and not blocked with leaves, dirt or bugs.
(b) Check the hoses for cracks, kinks, rot or loose connections.

5. BATTERY ELECTROLYTE LEVEL

Check that the electrolyte level of all battery cells is between the upper and lower level lines on the case.

6. BRAKE AND CLUTCH FLUID LEVELS

Check that the brake and clutch fluid levels are near the upper level line on the see–through reservoirs.

7. ENGINE DRIVE BELTS

Check all drive belts for fraying, cracks, wear or oiliness.

8. ENGINE OIL LEVEL

Check the level on the dipstick with the engine turned off.

9. POWER STEERING FLUID LEVEL

(a) Check the level on the dipstick.
(b) The level should be in the HOT or COLD range depending on the fluid temperature.

10. AUTOMATIC TRANSMISSION FLUID LEVEL

(a) Park the vehicle on a level surface.
(b) With the engine idling and the parking brake applied, shift the selector into all positions from the P to L, and then shift into the P position.
(c) Pull out the dipstick and wipe off the fluid with a clean rag. Re–insert the dipstick and check that the fluid level is in the HOT range.
(d) Do this check with the fluid at normal driving temperature (70 – 80˚C, 158 – 176˚F).

HINT:

Wait until the engine cools down (approx. 30 min.) before checking the fluid level after extended driving at high speeds, in hot weather, in heavy traffic or pulling a trailer.

11. EXHAUST SYSTEM

(a) Visually inspect for cracks, holes or loose supports.
(b) If any change in the sound of the exhaust or smell of the exhaust fumes is noticed, have the cause located and corrected.

ENGINE

MA004–08

INSPECTION

HINT:

Inspect these items when the engine is cold.

1. **REPLACE TIMING BELT**
   (5VZ–FE: See pages EM–14 and EM–20)
   (2UZ–FE: See pages EM–14 and EM–21)
2. **INSPECT VALVE CLEARANCE**
   (5VZ–FE: See page EM–4)
   (2UZ–FE: See page EM–4)
3. **INSPECT DRIVE BELT(S)**
   (5VZ–FE: See pages CH–1, SR–3 and AC–16)
   (2UZ–FE: See page CH–1)
4. **REPLACE ENGINE OIL AND OIL FILTER**
   (5VZ–FE: See page LU–3)
   (2UZ–FE: See page LU–2)
5. **REPLACE ENGINE COOLANT**
   (5VZ–FE: See page CO–2)
   (2UZ–FE: See page CO–2)
6. **INSPECT EXHAUST PIPES AND MOUNTINGS**

Visually inspect the pipes, hangers and connections for severe corrosion, leaks or damage.

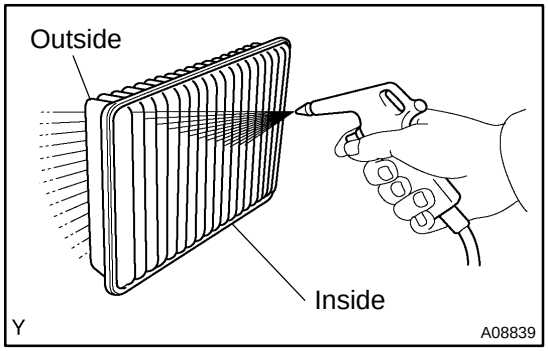

7. **INSPECT AIR FILTER**

(a) Visually check that the air filter is not excessively dirty or oily.

HINT:

Oiliness may indicate a stuck PCV valve.

If necessary, replace the air filter.

(b) Clean the air filter with compressed air.
First blow from the inside thoroughly, then blow off the outside of the air filter.

8. **REPLACE AIR FILTER**

Replace the air filter with a new one.

9. **INSPECT FUEL LINES AND CONNECTIONS, AND FUEL TANK VAPOR VENT SYSTEM HOSES AND FUEL TANK BAND**

Visually inspect the fuel lines for cracks, leakage loose connections, deformation or tank band looseness.

10. **REPLACE GASKET IN FUEL TANK CAP**
    (5VZ–FE: See page EC–6)
    (2UZ–FE: See page EC–8)

11. REPLACE SPARK PLUGS
(5VZ–FE: See page IG–1)
(2UZ–FE: See page IG–1)

12. INSPECT CHARCOAL CANISTER
(5VZ–FE: See page EC–6)
(2UZ–FE: See page EC–8)

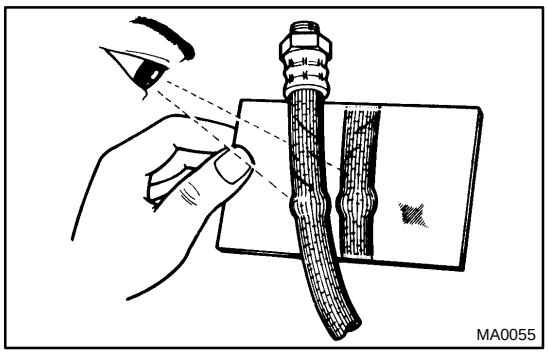

BRAKE

MA014–02

INSPECTION

1. INSPECT BRAKE LINE PIPES AND HOSES

HINT:

Inspect in a well–lighted area. Inspect the entire circumference and length of the brake hoses using a mirror as required. Turn the front wheels fully right or left before inspecting the front brake.

(a) Check all brake lines and hoses.
- ▲ Check for damage.
- ▲ Check for wear.
- ▲ Check for deformation.
- ▲ Check for cracks.
- ▲ Check for corrosion.
- ▲ Check for leaks.
- ▲ Check for bends.
- ▲ Check for twists.

(b) Check all clamps for tightness and connections for leakage.

(c) Check all clamps for tightness and connections for leakage.

(d) Check that the hoses and lines are clear of sharp edges, moving parts and the exhaust system.

(e) Check that the lines installed in grommets pass through the center of the grommets.

2. INSPECT FRONT BRAKE PADS AND DISCS (See page BR–29)

HINT:

If a squealing or scraping noise occurs from the brake during driving, check the pad wear indicator.

If there are traces of the indicator contacting the disc rotor, the disc pad should be replaced.

3. INSPECT REAR BRAKE LININGS AND DRUMS (See page BR–36)

CHASSIS

MA04D–02

INSPECTION

1. INSPECT STEERING LINKAGE

(a) Check the steering wheel free play (See page SR–9).

(b) Check the steering linkage for looseness or damage.

▲ Check that the tie rod ends do not have excessive play.

▲ Check that the dust seals and boots are not damaged.

▲ Check that the boot clamps are not loose.

2. INSPECT STEERING GEAR HOUSING OIL

Check the steering gear housing for oil leaks.

If leakage is found, check for cause and repair.

3. INSPECT BALL JOINTS AND DUST COVERS

(a) Inspect the ball joints for excessive looseness.

(b) Inspect the dust cover for damage.

4. 4WD:

INSPECT DRIVE SHAFT BOOTS

Inspect the drive shaft boots for clamp looseness, grease leakage or damage.

5. CHECK OIL LEVEL IN MANUAL TRANSMISSION, TRANSFER AND DIFFERENTIAL

Remove the filler plug and feel inside the hole with your finger. Check that the oil comes to within 5 mm (0.20 in.) of the bottom edge of the hole.

If the level is low, add oil until it begins to run out of the filler hole.

Transmission oil (2WD): See page MT–6.
Transmission oil (4WD): See page MT–11.
Transfer (VF2A) oil (5VZ–FE): See page TR–6.
Transfer (VF2BM) oil (2UZ–FE): See page TR–6.
Front differential oil (4WD): See page SA–26.
Rear differential oil: See page SA–92.

6. REPLACE MANUAL TRANSMISSION, TRANSFER AND DIFFERENTIAL OIL

(a) Remove the drain plug and drain the oil.

(b) Reinstall drain plug securely.

(c) Add new oil until it begins to run out of the filler hole.

Transmission oil (2WD): See page MT–6.
Transmission oil (4WD): See page MT–11.
Transfer (VF2A) oil (5VZ–FE): See page TR–6.
Transfer (VF2BM) oil (2UZ–FE): See page TR–6.
Front differential oil (4WD): See page SA–26.
Rear differential oil: See page SA–92.

7. CHECK FLUID LEVEL IN AUTOMATIC TRANSMISSION (See page DI–384)

8. REPLACE AUTOMATIC TRANSMISSION FLUID (See page DI–384)

9. LUBRICATE PROPELLER SHAFT AND TIGHTEN BOLTS

(a) 4WD:

Lubricate propeller shaft, referring to the lubrication chart. Before pumping in grease, wipe off any mud and dust on the grease fitting.

Grease grade:

Propeller shaft (Except Double–cardan joint): Lithium base chassis grease NLGI No. 2

Double–cardan joint: Molybdenum disulphide lithium base chassis grease NLGI No. 2

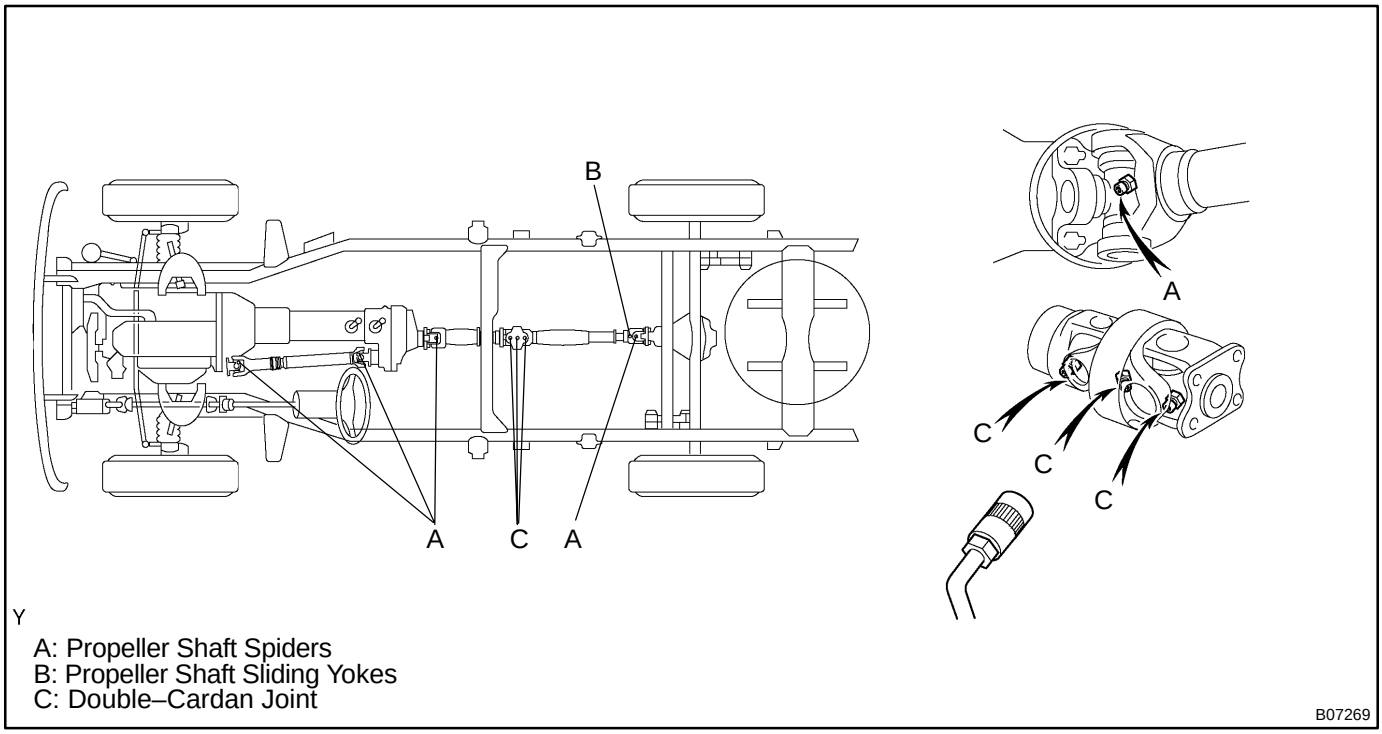

(b) Tighten the bolts for propeller shaft (2WD: See page PR–8) (4WD: See page PR–15).

10. ROTATE TIRES (See page SA–3)

BODY

MA04E–01

INSPECTION

TIGHTEN BOLTS AND NUTS ON CHASSIS AND BODY

(a) Where necessary, tighten all parts of the chassis.
- ▲ Front axle and suspension
- ▲ Drive train
- ▲ Rear axle and suspension
- ▲ Brake system
- ▲ Engine mounting, etc.

(b) Where necessary, tighten all parts of the body.
- ▲ Seat belt system
- ▲ Seats
- ▲ Doors and hood
- ▲ Body mountings
- ▲ Fuel tank
- ▲ Exhaust pipe system, etc.

MAINTENANCE

EQUIPMENT

PP0G5–01

Mirror	Brake hose
Torque wrench	

ENGINE MECHANICAL (5VZ–FE)

PP016–08

SST (Special Service Tools)

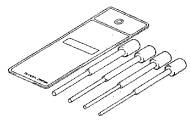	09201–10000	Valve Guide Bushing Remover & Replacer Set	
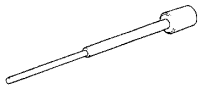	(09201–01060)	Valve Guide Bushing Remover & Replacer 6	
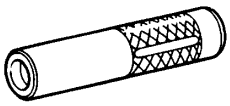	09201–41020	Valve Stem Oil Seal Replacer	
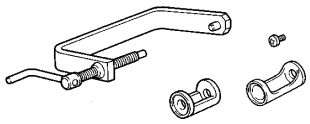	09202–70020	Valve Spring Compressor	
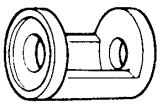	(09202–00010)	Attachment	
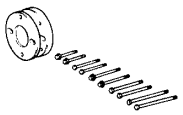	09213–54015	Crankshaft Pulley Holding Tool	
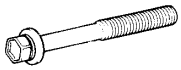	(90119–08216)	Bolt	
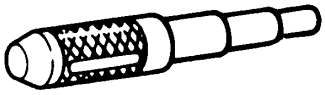	09222–30010	Connecting Rod Bushing Remover & Replacer	
	09223–15030	Oil Seal & Bearing Replacer	Crankshaft rear oil seal
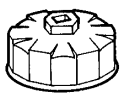	09228–07501	Oil Filter Wrench	
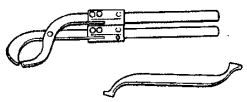	09248–55040	Valve Clearance Adjust Tool Set	
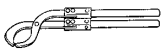	(09248–05410)	Valve Lifter Press	

	(09248–05420)	Valve Lifter Stopper	
	09330–00021	Companion Flange Holding Tool	Crankshaft pulley
	09816–30010	Oil Pressure Switch Socket	Oil pressure switch
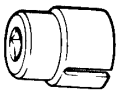	09817–16011	Back–up Light Switch Tool	Knock sensor
	09843–18040	Diagnosis Check Wire No.2	
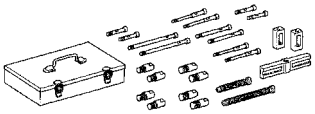	09950–50013	Puller C Set	
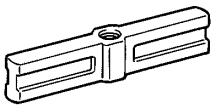	(09951–05010)	Hanger 150	Crankshaft pulley Crankshaft timing pulley
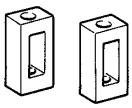	(09952–05010)	Slide Arm	Crankshaft pulley Crankshaft timing pulley
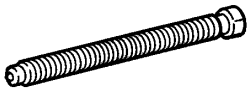	(09953–05020)	Center Bolt 150	Crankshaft pulley Crankshaft timing pulley
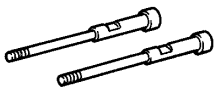	(09954–05011)	Claw No.1	Crankshaft timing pulley
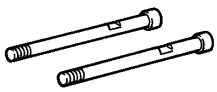	(09954–05031)	Claw No.3	Crankshaft pulley
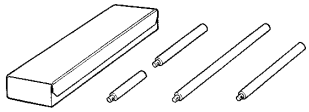	09950–70010	Handle Set	
	(09951–07150)	Handle 150	Crankshaft rear oil seal Valve guide bushing

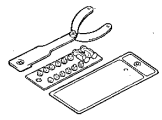	09960–10010	Variable Pin Wrench Set	
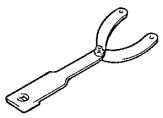	(09962–01000)	Variable Pin Wrench Arm Assy	Camshaft timing pulley Camshaft sub–gear
	(09963–00600)	Pin 6	Camshaft sub–gear
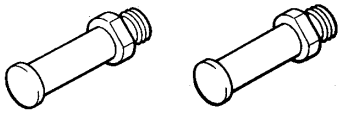	(09963–01000)	Pin 10	Camshaft timing pulley

PP017–07

RECOMMENDED TOOLS

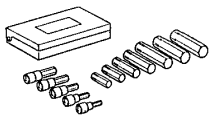	09040–00011	Hexagon Wrench Set .	
	09090–04020	Engine Sling Device	For suspending engine
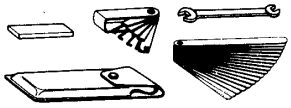	09200–00010	Engine Adjust Kit .	
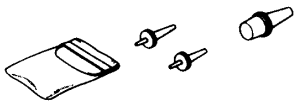	09258–00030	Hose Plug Set .	Plug for the vacuum hose, fuel hose etc.
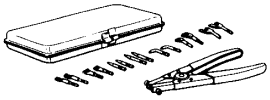	09904–00010	Expander Set .	

PP018–03

EQUIPMENT

Caliper gauge	
CO/HC meter	
Compression gauge	
Connecting rod aligner	
Cylinder gauge	
Dial indicator	
Dye penetrant	
Engine tune–up tester	
Groove cleaning tool	
Heater	
Magnetic finger	
Micrometer	
Pin hole grinder	
OBD II scan tool	
Piston ring compressor	
Piston ring expander	
Plastigage	
Precision straight edge	
Press	
Soft brush	
Ridge reamer	
Solvent	
Spring tester	Valve spring
Steel square	Valve spring
Thermometer	
Torque wrench	
Valve seat cutter	
V–block	
Vernier calipers	
Wire brush	Valve

PP3WO–01

SSM (Special Service Materials)

08826–00080	Seal Packing Black or equivalent (FIPG)	No. 1 camshaft bearing cap Cylinder head semi–circular plug Cylinder head cover Rear oil seal retainer
08826–00100	Seal Packing 1282B, THREE BOND 1282B or equivalent (FIPG)	Water bypass pipe
08833–00070	Adhesive 1324, THREE BOND 1324 or equivalent	Spark plug tube Drive plate bolt Flywheel bolt
08833–00080	Adhesive 1344 THREE BOND 1344 LOCTITE 242 or equivalent	No. 1 idler pulley bolt Oil pressure switch

ENGINE MECHANICAL (2UZ–FE)

PP24E–02

SST (Special Service Tools)

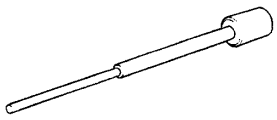	09201–01055	Valve Guide Bushing Remover & Replacer 5.5	
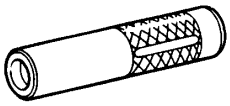	09201–41020	Valve Stem Oil Seal Replacer	
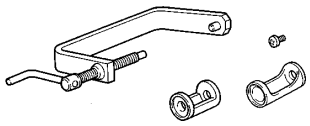	09202–70020	Valve Spring Compressor	
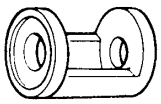	(09202–00010)	Attachment	
	09213–70011	Crankshaft Pully Holding Tool	
	09222–30010	Connecting Rod Bushing Remover & Replacer	
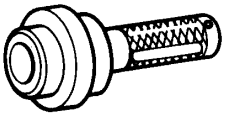	09223–46011	Crankshaft Front Oil Seal Replacer	Crankshaft pulley Crankshaft timing pulley
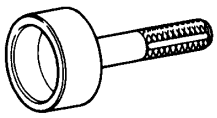	09223–56010	Crankshaft Rear Oil Seal Replacer	
	09330–00021	Companion Flange Holding Tool	Crankshaft pulley
	09843–18040	Diagnosis Check Wire No.2	
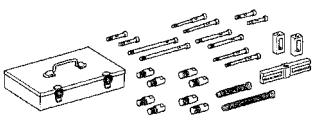	09950–50013	Puller C Set	
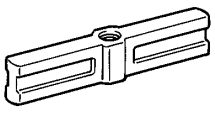	(09951–05010)	Hanger 150	Crankshaft pulley Crankshaft timing pulley

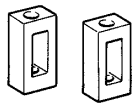	(09952–05010) Slide Arm	Crankshaft pulley Crankshaft timing pulley
	(09953–05010) Center Bolt 100	Crankshaft pulley Crankshaft timing pulley
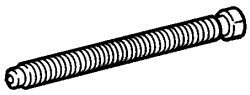	(09953–05020) Center Bolt 150	Crankshaft pulley Crankshaft timing pulley
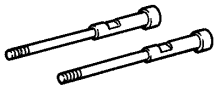	(09954–05011) Claw No.1	Crankshaft timing pulley
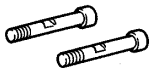	(09954–05021) Claw No.2	Crankshaft pulley
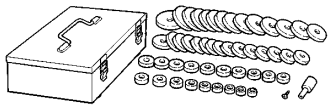	09950–60010 Replacer Set	
	(09951–00240) Replacer 24	Spark plug tube gasket
	(09951–00440) Replacer 44	Spark plug tube gasket
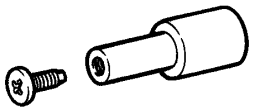	(09952–06010) Adapter	Spark plug tube gasket
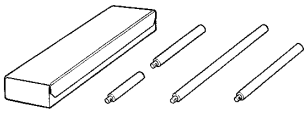	09950–70010 Handle Set	
	(09951–07100) Handle 100	Spark plug tube gasket Valve guide bushing
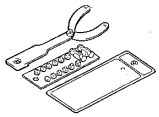	09960–10010 Variable Pin Wrench Set	
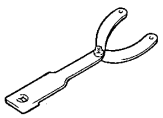	(09962–01000) Variable Pin Wrench Arm Assy	Camshaft timing pulley Camshaft sub–gear

	(09963–00500) Pin 5	Camshaft sub–gear
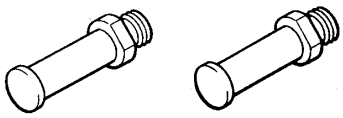	(09963–01000) Pin 10	Camshaft timing pulley

PP1BL–08

RECOMMENDED TOOLS

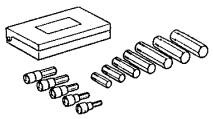	09040–00011	Hexagon Wrench Set .	
	09090–04020	Engine Sling Device	For suspension engine
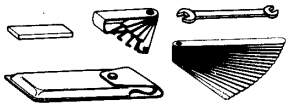	09200–00010	Engine Adjust Kit .	
	09258–00030	Hose Plug Set .	Plug for vacuum hose, fuel hose etc.
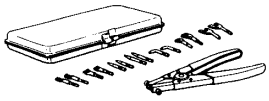	09904–00010	Expander Set .	

PP1BM–01

EQUIPMENT

Caliper gauge	
CO/HC meter	
Compression gauge	
Connecting rod aligner	
Cylinder gauge	
Dial indicator	
Dye penetrant	
Engine tune–up tester	
Groove cleaning tool	
Heater	
Magnetic finger	
Micrometer	
Pin hole grinder	
OBD II scan tool	
Piston ring compressor	
Piston ring expander	
Plastigage	
Precision straight edge	
Press	
Soft brush	
Ridge reamer	
Solvent	
Spring tester	Valve spring
Steel square	Valve spring
Thermometer	
Torque wrench	
Valve seat cutter	
V–block	
Vernier calipers	
Wire brush	Valve

PP1BN–05

SSM (Special Service Materials)

08826–00080	Seal Packing Black or equivalent (FIPG)	Front camshaft bearing cap Cylinder head semi–circular plug Camshaft housing cap Cylinder head cover Rear oil seal retainer
08833–00070	Adhesive 1324, THREE BOND 1324 or equivalent	Spark plug tube Drive plate bolt Torque converter clutch bolt Engine coolant drain union
08833–00080	Adhesive 1344 THREE BOND 1344 LOCTITE 242 or equivalent	No. 1 idler pulley bolt

EMISSION CONTROL (5VZ–FE)

PP015–07

EQUIPMENT

MITYVAC (Hand–held vacuum pump)	
Pressure gauge	
Torque wrench	
Vacuum gauge	

EMISSION CONTROL (2UZ–FE)

PP1AK–04

EQUIPMENT

MITYVAC (Hand–held vacuum pump)	
Pressure gauge	
Torque wrench	
Vacuum gauge	

PP3WN–01

SSM (Special Service Materials)

08833–00070	Adhesive 1324, THREE BOND 1324 or equivalent	PCV valve

SFI (5VZ–FE)

PP3WV–01

SST (Special Service Tools)

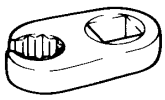	09023–38400	Union Nut Wrench 14mm	Fuel line flare nut
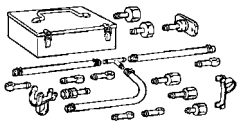	09268–41047	Injection Measuring Tool Set	
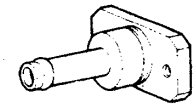	(09268–41091)	NO.7 Union	
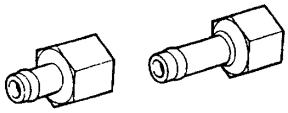	(09268–52011)	Injection Measuring Attachment	
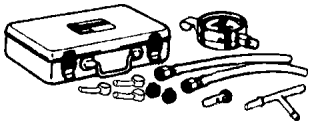	09268–45014	EFI Fuel Pressure Gauge	
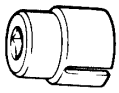	09817–16011	Back–up Light Switch Tool	Knock sensor
	09842–30070	Wiring ”F” EFI Inspection	

PP01E–03

RECOMMENDED TOOLS

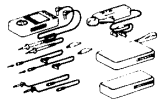	09082–00050	TOYOTA Electrical Tester Set.	
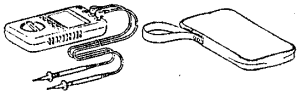	(09082–00040)	TOYOTA Electrical Tester.	
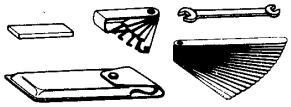	09200–00010	Engine Adjust Kit .	
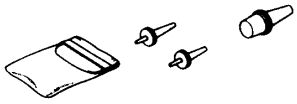	09258–00030	Hose Plug Set .	Plug for the vacuum hose, fuel hose etc.

PP01F–02

EQUIPMENT

Carburetor cleaner	Throttle body
Graduated cylinder	Injector
OBD II scan tool	Engine speed
Soft brush	Throttle body
Sound scope	Injector
Torque wrench	

SFI (2UZ–FE)

PP24H–02

SST (Special Service Tools)

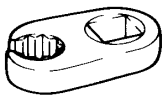	09023–38400	Union Nut Wrench 14mm	Fuel line flare nut
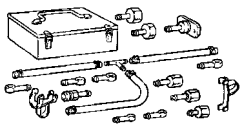	09268–41047	Injection Measuring Tool Set	
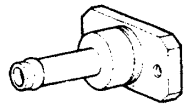	(09268–41091)	NO.7 Union	
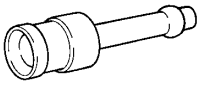	(09268–41110)	Adaptor	
	(09268–41300)	Clamp	
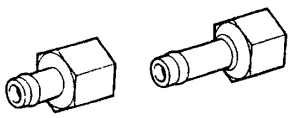	(09268–52011)	Injection Measuring Attachment	
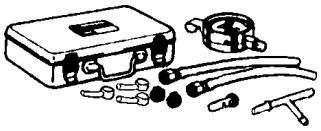	09268–45014	EFI Fuel Pressure Gauge	
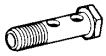	(09268–41190)	Adaptor	
	(90405–06167)	I Union	
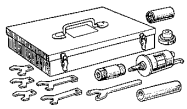	09612–24014	Steering Gear Housing Overhaul Tool Set	
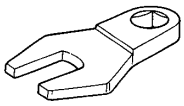	(09617–24011)	Steering Rack Wrench	Fuel pressure pulsation damper
	09816–30010	Oil Pressure Switch Socket	Knock sensor

 09842–30070 Wiring "F" EFI Inspection	

PP0U4–05

RECOMMENDED TOOLS

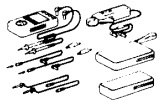	09082–00050	TOYOTA Electrical Tester Set.	
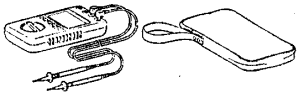	(09082–00040)	TOYOTA Electrical Tester.	
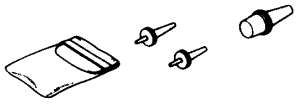	09258–00030	Hose Plug Set .	Plug for vacuum hose, fuel hose etc.

PP0NI–02

EQUIPMENT

Graduated cylinder	Injector
OBD II scan tool	
Sound scope	Injector
Torque wrench	
Vacuum gauge	

COOLING (5VZ–FE)

PP24F–02

SST (Special Service Tools)

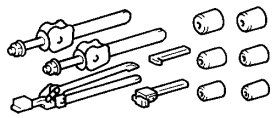	09230–01010	Radiator Service Tool Set	
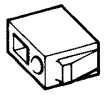	09231–14010	Punch	Radiator

PP01J–02

EQUIPMENT

Heater	
Radiator cap tester	
Thermometer	
Torque wrench	

PP01K–04

COOLANT

Item		Capacity	Classification
Engine coolant	A/T	9.9 liters (10.5 US qts, 8.7 lmp. qts)	”TOYOTA Long Life Coolant” or equivalent
	M/T	10.0 liters (10.6 US qts, 8.8 lmp. qts)	

PP24G–02

SSM (Special Service Materials)

08826–00100	Seal Packing 1282B, THREE BOND 1282B or equivalent (FIPG)	Water pump

COOLING (2UZ–FE)

PP24C–04

SST (Special Service Tools)

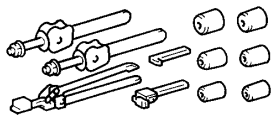	09230–01010	Radiator Service Tool Set	
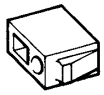	09231–14010	Punch	Radiator

PP1AQ–02

EQUIPMENT

Heater	Thermostat
Radiator cap tester	
Thermometer	Thermostat
Torque wrench	

PP1AR–02

COOLANT

Item	Capacity	Classification
Engine coolant	11.6 liters (12.3 US qts, 10.2 lmp. qts)	”TOYOTA Long Life Coolant” or equivalent

PP1AS–04

SSM (Special Service Materials)

08826–00100	Seal Packing 1282B, THREE BOND 1282B or equivalent (FIPG)	Water inlet housing

LUBRICATION (5VZ–FE)

PP01R–04

SST (Special Service Tools)

	09032–00100	Oil Pan Seal Cutter	
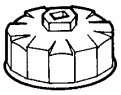	09228–07501	Oil Filter Wrench	
	09309–37010	Transmission Bearing Replacer	Crankshaft front oil seal
	09816–30010	Oil Pressure Switch Socket	

PP01S–05

RECOMMENDED TOOLS

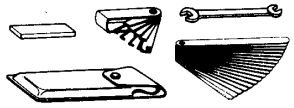	09200–00010 Engine Adjust Kit .	

PP01T–02

EQUIPMENT

Oil pressure gauge	
Precision straight edge	Oil pump
Torque wrench	

PP01U–08

LUBRICANT

Item		Capacity	Classification
Engine oil			API grade SL, Energy–Conserving or ILSAC multigrade engine oil. SAE 5W–30 is the best choice for your vehicle, for good fuel economy, and good starting in cold weather
Dry fill		5.9 liters (6.2 US qts, 5.2 lmp. qts)	
Drain and refill	w/ Oil filter change	5.2 liters (5.5 US qts, 4.6 lmp. qts)	
	w/o Oil filter change	4.9 liters (5.2 US qts, 4.3 lmp. qts)	

PP24D–02

SSM (Special Service Materials)

08826–00080	Seal Packing Black or equivalent (FIPG)	Oil pump, Oil pan
08833–00080	Adhesive 1344 THREE BOND 1344 LOCTITE 242 or equivalent	Oil pressure switch

LUBRICATION (2UZ–FE)

PP24A–04

SST (Special Service Tools)

	09032–00100	Oil Pan Seal Cutter	
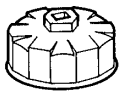	09228–07501	Oil Filter Wrench	
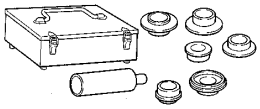	09316–60011	Transmission & Transfer Bearing Replacer	
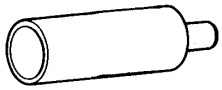	(09316–00011)	Replacer Pipe	Crankshaft front oil seal

PP1AU–04

RECOMMENDED TOOLS

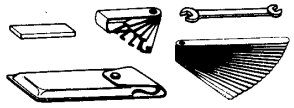	09200–00010 Engine Adjust Kit .	
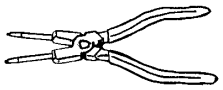	09905–00013 Snap Ring Pliers .	

PP1AV–02

EQUIPMENT

Oil pressure gauge	
Precision straight edge	
Torque wrench	

PP1AW–06

LUBRICANT

Item		Capacity	Classification
Engine oil			API grade SL, Energy–Conserving or ILSAC multigrade engine oil. SAE 5W–30 is the best choice for your vehicle, for good fuel economy, and good starting in cold weather
Dry fill		7.1 liters (7.5 US qts, 6.2 Imp. qts)	
Drain and refill	w/ Oil filter change	6.2 liters (6.5 US qts, 5.5 Imp. qts)	
	w/o Oil filter change	5.7 liters (6.0 US qts, 5.0 Imp qts)	

PP1AX–04

SSM (Special Service Materials)

08826–00080	Seal Packing Black or equivalent (FIPG)	Oil pump No.1 oil pan No.2 oil pan
08833–00080	Adhesive 1344 THREE BOND 1344 LOCTITE 242 or equivalent	Oil pressure switch

IGNITION (5VZ–FE)

PP3WP–01

RECOMMENDED TOOLS

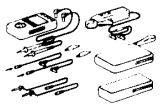	09082–00050	TOYOTA Electrical Tester Set.	
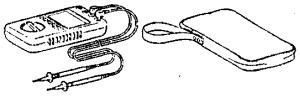	(09082–00040)	TOYOTA Electrical Tester.	
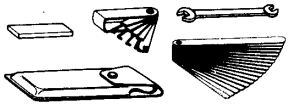	09200–00010	Engine Adjust Kit .	

PP020–01

EQUIPMENT

Megger insulation resistance meter	Spark plug
Spark plug cleaner	

IGNITION (2UZ–FE)

PP3WQ–01

RECOMMENDED TOOLS

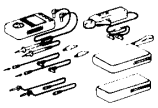	09082–00050	TOYOTA Electrical Tester Set.	
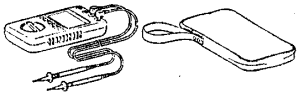	(09082–00040)	TOYOTA Electrical Tester.	
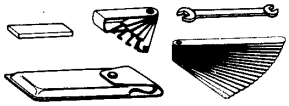	09200–00010	Engine Adjust Kit .	

PP1AM–01

EQUIPMENT

Megger (Insulation resistance meter)	Spark plug
Spark plug cleaner	
Torque wrench	

STARTING (5VZ–FE)

PP024–04

SST (Special Service Tools)

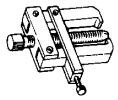	09286–46011	Injection Pump Spline Shaft Puller	Armature bearing
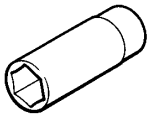	09810–38140	Starter Magnet Switch Nut Wrench 14	
	09820–00031	Alternator Rear Bearing Replacer	Armature front bearing

PP3WR–01

RECOMMENDED TOOLS

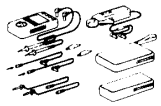	09082–00050 TOYOTA Electrical Tester Set.	
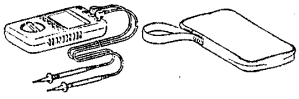	(09082–00040) TOYOTA Electrical Tester.	

PP026–03

EQUIPMENT

Dial indicator	Commutator
Magnetic finger	Steel ball
Press	Armature bearing, Magnetic switch terminal kit
Pull scale	Brush spring
Sandpaper	Commutator
Torque wrench	
V–block	Commutator
Vernier calipers	Commutator, Brush

STARTING (2UZ–FE)

PP1AZ–07

SST (Special Service Tools)

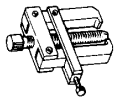	09286–46011	Injection Pump Spline Shaft Puller	Armature bearing
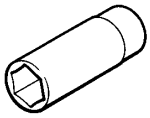	09810–38140	Starter Magnet Switch Nut Wrench 14	
	09820–00031	Alternator Rear Bearing Replacer	Armature front bearing

PP3WS–01

RECOMMENDED TOOLS

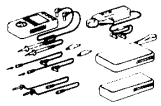	09082–00050 TOYOTA Electrical Tester Set.	
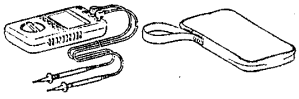	(09082–00040) TOYOTA Electrical Tester.	

PP1B1–03

EQUIPMENT

Dial indicator	Commutator
Magnetic finger	Steel ball
Press	Armature bearing, Magnetic switch terminal kit
Pull scale	Brush spring
Sandpaper	Commutator
Torque wrench	
V–block	Commutator
Vernier calipers	Commutator, Brush

CHARGING (5VZ–FE)

PP24B–03

SST (Special Service Tools)

	09285–76010	Injection Pump Camshaft Bearing Cone Replacer	Rotor rear bearing cover
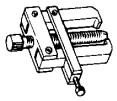	09286–46011	Injection Pump Spline Shaft Puller	Rectifier end frame
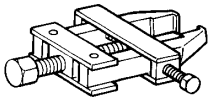	09820–00021	Alternator Rear Bearing Puller	
	09820–00031	Alternator Rear Bearing Replacer	
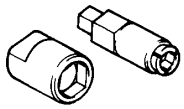	09820–63011	Alternator Pulley Set Nut Wrench Set	
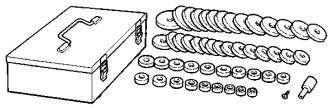	09950–60010	Replacer Set	Rotor front bearing
	(09951–00260)	Replacer 26	
	(09951–00460)	Replacer 46	70 A type
	(09951–00520)	Replacer 52	80 A type
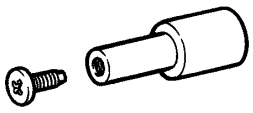	(09952–06010)	Adapter	

PP3WT–01

RECOMMENDED TOOLS

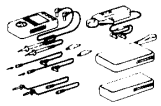	09082–00050 TOYOTA Electrical Tester Set.	
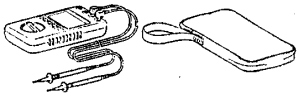	(09082–00040) TOYOTA Electrical Tester.	

PP02C–05

EQUIPMENT

Battery specific gravity gauge	Battery
Belt tension gauge	
Torque wrench	
Vernier calipers	Rotor (Slip ring)

CHARGING (2UZ–FE)

PP249–03

SST (Special Service Tools)

	09285–76010	Injection Pump Camshaft Bearing Cone Replacer	Rotor rear bearing cover
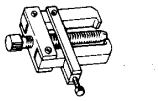	09286–46011	Injection Pump Spline Shaft Puller	Rectifier end frame
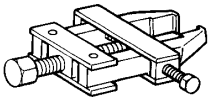	09820–00021	Alternator Rear Bearing Puller	
	09820–00031	Alternator Rear Bearing Replacer	
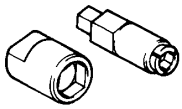	09820–63011	Alternator Pulley Set Nut Wrench Set	
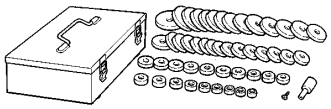	09950–60010	Replacer Set	Rotor front bearing
	(09951–00260)	Replacer 26	
	(09951–00460)	Replacer 46	70 A type
	(09951–00520)	Replacer 52	80 A type
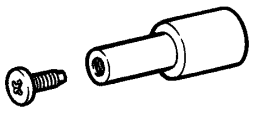	(09952–06010)	Adapter	

PP3WU–01

RECOMMENDED TOOLS

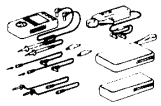	09082–00050 TOYOTA Electrical Tester Set.	
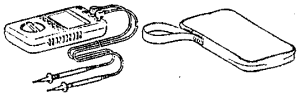	(09082–00040) TOYOTA Electrical Tester.	

PP1B4–05

EQUIPMENT

Battery specific gravity gauge+	Battery
Torque wrench	
Vernier calipers	Rotor (Slip ring)

CLUTCH

PP0EN–02

SST (Special Service Tools)

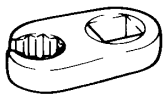	09023–00100	Union Nut Wrench 10 mm	Clutch line
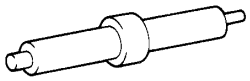	09301–00110	Clutch Guide Tool	
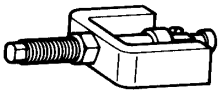	09303–35011	Input Shaft Front Bearing Puller	
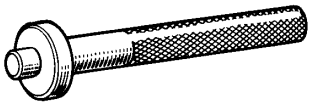	09304–30012	Input Shaft Front Bearing Replacer	
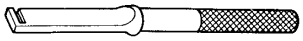	09333–00013	Clutch Diaphragm Spring Aligner	

PP0EO–02

RECOMMENDED TOOLS

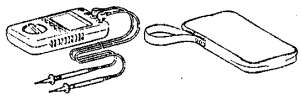	09082–00040 TOYOTA Electrical Tester.	
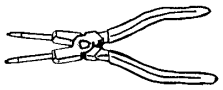	09905–00013 Snap Ring Pliers .	

PP0EP–01

EQUIPMENT

Caliper	
Dial indicator	
Torque wrench	

MANUAL TRANSMISSION (R150, R150F)

PP25A–02

SST (Special Service Tools)

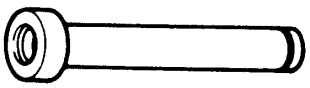	09309–35010	Transmission Rear Bearing Replacer	2WD: Output shaft rear bearing Output shaft center bearing
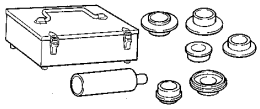	09316–60011	Transmission & Transfer Bearing Replacer	
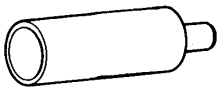	(09316–00011)	Replacer Pipe	Output shaft rear bearing Gear spline piece No.5
	(09316–00031)	Replacer ”B”	5th gear
	(09316–00071)	Replacer ”F”	4WD: Output shaft rear bearing Output shaft center bearing
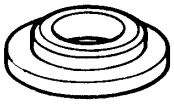	09506–35010	Differential Drive Pinion Rear Bearing Replacer	Input shaft bearing
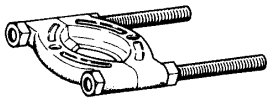	09950–00020	Bearing Remover	Counter drive gear front bearing
	09950–40011	Puller B Set	Output shaft rear bearing
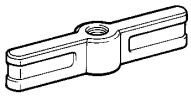	(09951–04010)	Hanger 150	
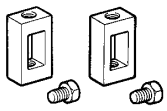	(09952–04010)	Slide Arm	
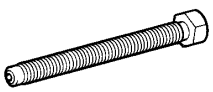	(09953–04020)	Center Bolt 150	
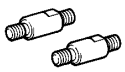	(09954–04010)	Arm 25	

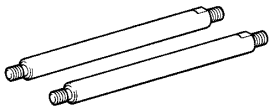	(09954–04030) Arm 150	
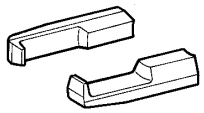	(09955–04061) Claw No.6	
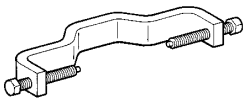	(09958–04011) Holder	
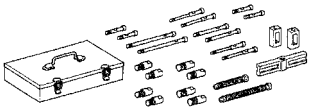	09950–50013 Puller C Set	Gear spline piece No.5
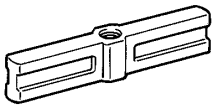	(09951–05010) Hanger 150	
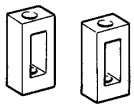	(09952–05010) Slide Arm	
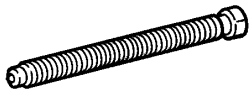	(09953–05020) Center Bolt 150	
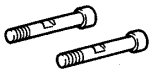	(09954–05021) Claw No.2	
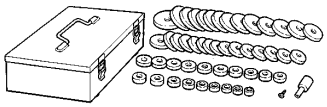	09950–60010 Replacer Set	
	(09951–00510) Replacer 51	Front bearing retainer oil seal
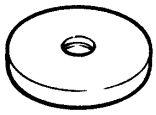	(09951–00570) Replacer 57	Extension housing oil seal Transfer adaptor oil seal
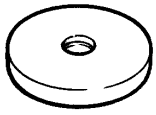	(09951–00620) Replacer 62	Counter rear bearing
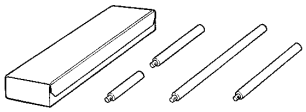	09950–70010 Handle Set	

	(09951–07150) Handle 150	

PP0ER–04

RECOMMENDED TOOLS

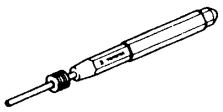	09031–00030	Pin Punch .	
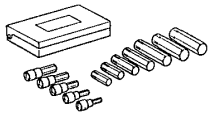	09040–00011	Hexagon Wrench Set .	
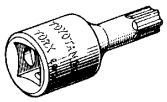	09042–00020	Torx Socket T40 .	
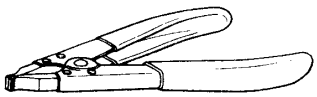	09905–00012	Snap Ring No.1 Expander .	

PP0ES–02

EQUIPMENT

Dial indicator	
Micrometer	
Torque wrench	
Feeler gauge	
Magnetic finger	

PP0ET–02

LUBRICANT

Item		Capacity	Classification
Manual transmission oil	2WD:	2.6 liters (2.7 US qts, 2.3 Imp. qts)	API GL–4 or GL–5
	4WD:	2.2 liters (2.3 US qts, 1.9 Imp. qts)	SAE 75W–90

SSM (Special Service Materials)

08826–00090	Seal Packing 1281, THREE BOND 1281 or equivalent (FIPG)	Intermediate plate x Transmission case Front bearing retainer x Transmission case
08833–00080	Adhesive 1344 THREE BOND 1344 LOCTITE 242 or equivalent	Straight screw plug Front bearing retainer set bolt

AUTOMATIC TRANSMISSION (A340E, A340F)

PP25J–03

SST (Special Service Tools)

	09032–00100	Oil Pan Seal Cutter	Valve body assembly
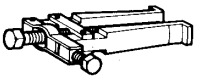	09308–10010	Oil Seal Puller	Extension housing oil seal
	09325–40010	Transmission Oil Plug	Extension housing oil seal
	09350–30020	TOYOTA Automatic Transmission Tool Set	
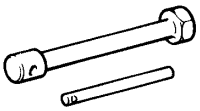	(09351–32010)	One–way Clutch Test Tool	Torpue converter clutch and drive plate
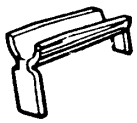	(09351–32020)	Stator Stopper	Torpue converter clutch and drive plate
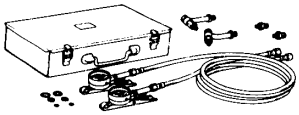	09992–00095	Automatic Transmission Oil Pressure Gauge Set	
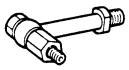	(09992–00151)	Adaptor B	
	(09992–00271)	Gauge Assy	

PP0FM–04

RECOMMENDED TOOLS

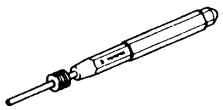	09031–00030	Pin Punch .	
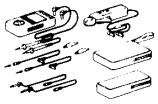	09082–00050	TOYOTA Electrical Tester Set.	
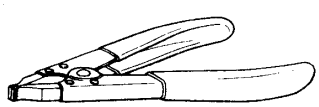	09905–00012	Snap Ring No.1 Expander .	

PP0FN–03

EQUIPMENT

OBD II scan tool	
Vernier calipers	Torque converter clutch
Dial indicator or dial indicator with magnetic base	Drive plate
Straight edge	Torque converter clutch
Torque wrench	

PP0FO–07

LUBRICANT

Item	Capacity	Classification
Automatic transmission fluid		
(5VZ–FE)		
Dry fill	10.1 liters (10.7 US qts, 8.9 Imp.qts)	
Drain and refill	2.0 liters (2.1 US qts, 1.8 Imp.qts)	Automatic transmission fluid Type T–IV
(2UZ–FE)		
Dry fill	12.3 liters (13.0 US qts, 10.8 Imp.qts)	
Drain and refill	2.0 liters (2.1 US qts, 1.8 Imp.qts)	

PP25K–02

SSM (Special Service Materials)

08826–00090	Seal Packing 1281, THREE BOND 1281 or equivalent (FIPG)	Transmission case x Oil pan
08833–00080	Adhesive 1344 THREE BOND 1344 LOCTITE 242 or equivalent	Transmission case x Extension housing

TRANSFER (VF2A)

PP0FF–03

SST (Special Service Tools)

	09223–15020	Oil Seal & Bearing Replacer	Planetary gear outer bearing
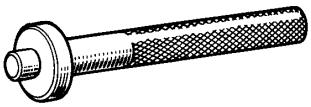	09304–12012	Input Shaft Front Bearing Replacer	Shift fork shaft oil seal
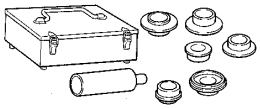	09316–60011	Transmission & Transfer Bearing Replacer	
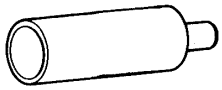	(09316–00011)	Replacer Pipe	High and low clutch hub Rear output shaft bearing Front case oil seal
	(09316–00071)	Replacer ”F”	Rear output shaft bearing
	09330–00021	Companion Flange Holding Tool	Companion flange
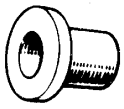	09515–30010	Rear Wheel Bearing Replacer	Planetary gear outer bearing
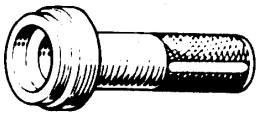	09554–22010	Differential Oil Seal Replacer	Extension housing oil seal
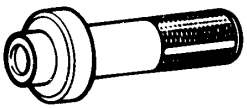	09554–30011	Differential Oil Seal Replacer	Planetary gear outer bearing
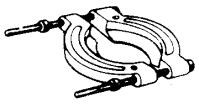	09555–55010	Differential Drive Pinion Bearing Replacer	Driven sprocket rear bearing Rear output shaft bearing Planetary gear outer bearing
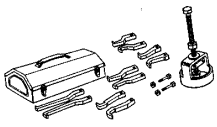	09612–65014	Steering Worm Bearing Puller	
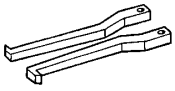	(09612–01030)	Claw ”C”	Planetary gear inner bearing

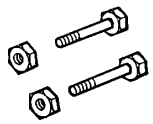	(09612–01050)	Hanger Pin with Nut	Planetary gear inner bearing
	09950–40011	Puller B Set	
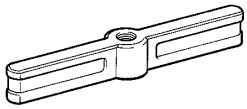	(09951–04020)	Hanger 200	Companion flange
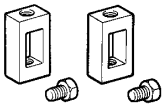	(09952–04010)	Slide Arm	Companion flange
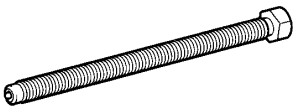	(09953–04030)	Center Bolt 200	Companion flange
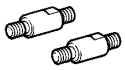	(09954–04010)	Arm 25	Companion flange
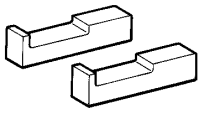	(09955–04051)	Claw No.5	Companion flange
	(09957–04010)	Attachment	Companion flange
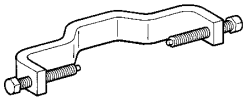	(09958–04011)	Holder	Companion flange
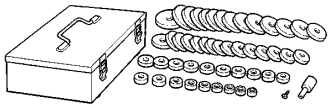	09950–60010	Replacer Set	
	(09951–00220)	Replacer 22	Companion flange oil seal
	(09951–00350)	Replacer 35	Companion flange oil seal
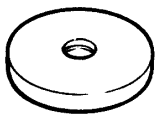	(09951–00570)	Replacer 57	Planetary gear inner bearing

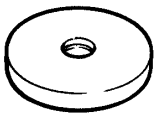	(09951–00590) Replacer 59	Front bearing retainer oil seal
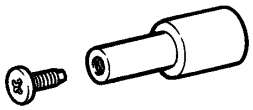	(09952–06010) Adapter	Companion flange oil seal
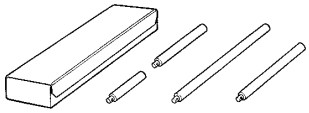	09950–70010 Handle Set	
	(09951–07100) Handle 100	Front bearing retainer oil seal Planetary gear outer bearing Planetary gear inner bearing Companion flange oil seal

PP1YC–03

RECOMMENDED TOOLS

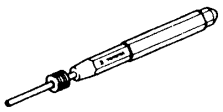	09031–00030	Pin Punch .	
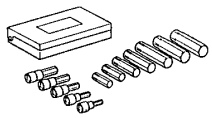	09040–00011	Hexagon Wrench Set .	
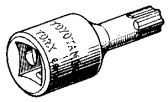	09042–00010	Torx Socket T30 .	
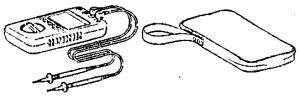	09082–00040	TOYOTA Electrical Tester.	
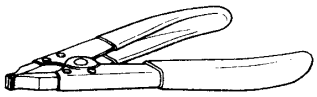	09905–00012	Snap Ring No.1 Expander .	

PP0FH–02

EQUIPMENT

Dial indicator	
Micrometer	
Torque wrench	
Feeler gauge	
Magnetic finger	
Steel square	

PP0FI–02

LUBRICANT

Item	Capacity	Classification
Transfer oil	1.0 liters (1.1 US qts, 0.9 Imp. qts)	API GL–4 or GL–5 SAE 75W–90

PP1YD–01

SSM (Special Service Materials)

08826–00090	Seal Packing 1281, THREE BOND 1281 or equivalent (FIPG)	Front case x Rear case Extension housing x Rear case Front retainer x Front case
08833–00080	Adhesive 1344 THREE BOND 1344 LOCTITE 242 or equivalent	Straight screw plug Head screw plug Extension housing set bolt Front retainer set bolt

TRANSFER (VF2BM)

SST (Special Service Tools)

PP25F–01

	09223–15020	Oil Seal & Bearing Replacer	Planetary gear outer bearing
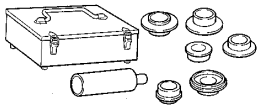	09316–60011	Transmission & Transfer Bearing Replacer	
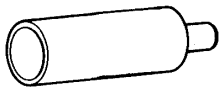	(09316–00011)	Replacer Pipe	Rear output shaft bearing Front case oil seal
	(09316–00071)	Replacer ”F”	Rear output shaft bearing
	09330–00021	Companion Flange Holding Tool	Companion flange
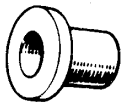	09515–30010	Rear Wheel Bearing Replacer	Planetary gear outer bearing
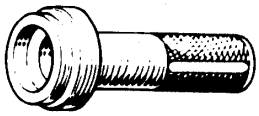	09554–22010	Differential Oil Seal Replacer	Extension housing oil seal
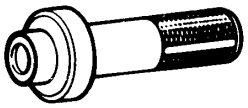	09554–30011	Differential Oil Seal Replacer	Planetary gear outer bearing
	09555–55010	Differential Drive Pinion Bearing Replacer	Driven sprocket rear bearing Rear output shaft bearing Planetary gear outer bearing
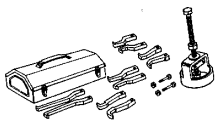	09612–65014	Steering Worm Bearing Puller	
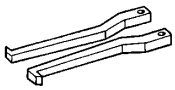	(09612–01030)	Claw ”C”	Planetary gear inner bearing
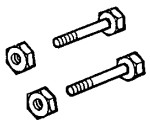	(09612–01050)	Hanger Pin with Nut	Planetary gear inner bearing

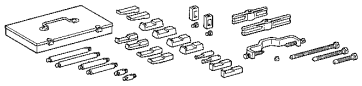	09950–40011	Puller B Set	
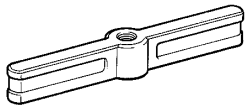	(09951–04020)	Hanger 200	Companion flange
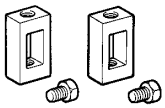	(09952–04010)	Slide Arm	Companion flange
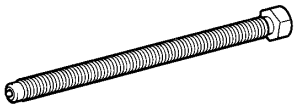	(09953–04030)	Center Bolt 200	Companion flange
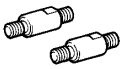	(09954–04010)	Arm 25	Companion flange
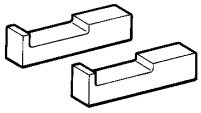	(09955–04051)	Claw No.5	Companion flange
	(09957–04010)	Attachment	Companion flange
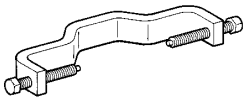	(09958–04011)	Holder	Companion flange
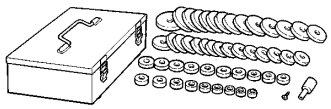	09950–60010	Replacer Set	
	(09951–00220)	Replacer 22	Companion flange oil seal
	(09951–00350)	Replacer 35	Companion flange oil seal
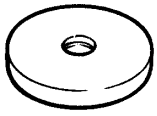	(09951–00570)	Replacer 57	Planetary gear inner bearing
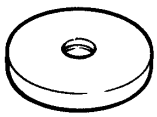	(09951–00590)	Replacer 59	Front bearing retainer oil seal

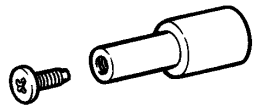	(09952–06010) Adapter	Companion flange oil seal
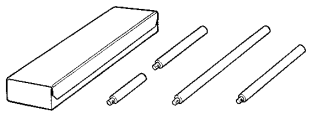	09950–70010 Handle Set	
	(09951–07100) Handle 100	Front bearing retainer oil seal Planetary gear outer bearing Planetary gear inner bearing Companion flange oil seal

PP25G–02

RECOMMENDED TOOLS

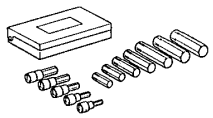	09040–00011	Hexagon Wrench Set .	
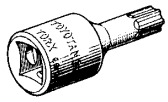	09042–00010	Torx Socket T30 .	
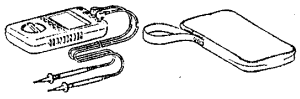	09082–00040	TOYOTA Electrical Tester.	
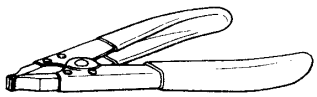	09905–00012	Snap Ring No.1 Expander .	

PP0FH–02

EQUIPMENT

Dial indicator	
Micrometer	
Torque wrench	
Feeler gauge	
Magnetic finger	
Steel square	

PP0FI–02

LUBRICANT

Item	Capacity	Classification
Transfer oil	1.0 liters (1.1 US qts, 0.9 Imp. qts)	API GL–4 or GL–5 SAE 75W–90

PP1YD–01

SSM (Special Service Materials)

08826–00090	Seal Packing 1281, THREE BOND 1281 or equivalent (FIPG)	Front case x Rear case Extension housing x Rear case Front retainer x Front case
08833–00080	Adhesive 1344 THREE BOND 1344 LOCTITE 242 or equivalent	Straight screw plug Head screw plug Extension housing set bolt Front retainer set bolt

PROPELLER SHAFT

SST (Special Service Tools)

PP0EY–03

	09325–40010	Transmission Oil Plug	Transmission to prevent oil leakage
	09330–00021	Companion Flange Holding Tool	Companion flange holding
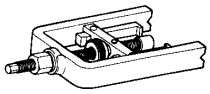	09332–25010	Universal Joint Bearing Remover & Replacer	Spider bearing removal and installation
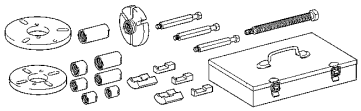	09950–30012	Puller A Set	Companion flange removal
	(09951–03010)	Upper Plate	
	(09953–03010)	Center Bolt	
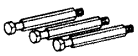	(09954–03010)	Arm	
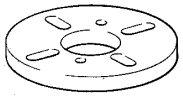	(09955–03030)	Lower Plate 130	
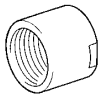	(09956–03020)	Adapter 18	

PP0EZ–01

EQUIPMENT

Dial indicator	
Torque wrench	

SUSPENSION AND AXLE

PP25D–03

SST (Special Service Tools)

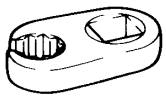	09023–00100	Union Nut Wrench 10 mm	Rear axle
	09223–15020	Oil Seal & Bearing Replacer	Front differential
	09223–15030	Oil Seal & Bearing Replacer	Front axle
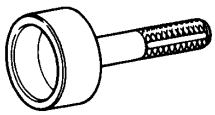	09223–56010	Crankshaft Rear Oil Seal Replacer	Rear axle
	09226–10010	Crankshaft Front & Rear Bearing Replacer	Front differential
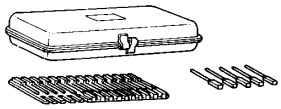	09240–00020	Wire Gauge Set	Front drive shaft
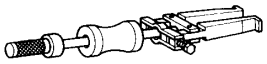	09308–00010	Oil Seal Puller	Front differential Rear axle
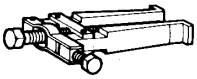	09308–10010	Oil Seal Puller	Front differential Rear differential
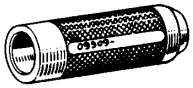	09309–37010	Transmission Bearing Replacer	Front differential Front suspension
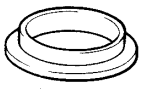	09316–12010	Transfer Bearing Replacer	Rear differential
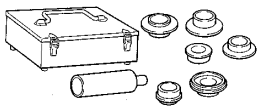	09316–60011	Transmission & Transfer Bearing Replacer	Rear axle
	(09316–00051)	Replacer ”D”	

	09318–12010	Transfer Bearing Adjusting Nut Wrench	Front axle (2WD)
	09330–00021	Companion Flange Holding Tool	Front differential Rear differential
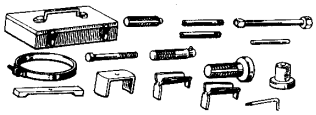	09350–20015	TOYOTA Automatic Transmission Tool Set	Front differential
	(09369–20040)	Piston Spring Compressor Set	
	09502–12010	Differential Bearing Replacer	Front differential Front suspension
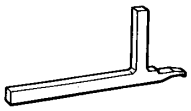	09504–22012	Differential Side Bearing Replacer	Rear differential
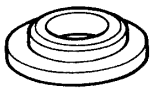	09506–30012	Differential Drive Pinion Rear Bearing Cone Replacer	Front differential
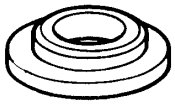	09506–35010	Differential Drive Pinion Rear Bearing Replacer	Rear differential
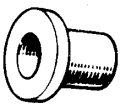	09515–30010	Rear Wheel Bearing Replacer	Rear axle
	09520–01010	Drive Shaft Remover Attachment	Front drive shaft
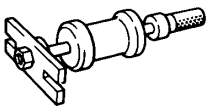	09520–24010	Differential Side Gear Shaft Puller	Front drive shaft
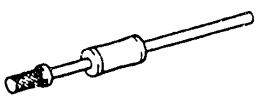	(09520–32040)	Shocker Set	
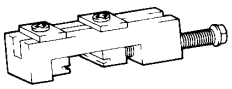	09521–24010	Drive Shaft Boot Clamping Tool	Front drive shaft

	09521–25011	Rear Axle Shaft Puller	Rear axle
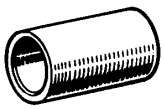	09523–36010	Rear Axle Hub Guide Tool	Rear differential
	09527–17011	Rear Axle Shaft Bearing Remover	Front axle
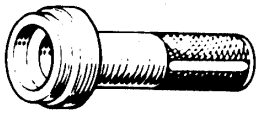	09554–22010	Differential Oil Seal Replacer	Front differential
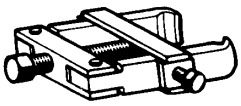	09556–22010	Drive Pinion Front Bearing Remover	Front differential Rear differential
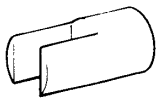	09564–32011	Differential Preload Adaptor	Front differential
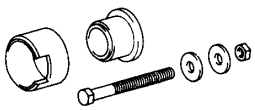	09570–22011	Differential Mounting Cushion Remover & Replacer	Front differential
	09608–32010	Steering Knuckle Oil Seal Replacer	Front differential
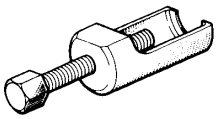	09610–20012	Pitman Arm Puller	Front suspension
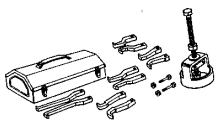	09612–65014	Steering Worm Bearing Puller	Front differential
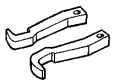	(09612–01020)	Claw ”B”	
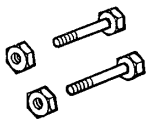	(09612–01050)	Hanger Pin with Nut	
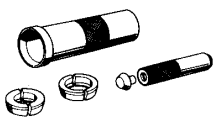	09613–26010	Steering Worm Bearing Cone Remover	Front suspension

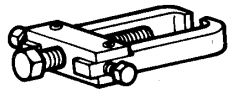	09628–62011	Ball Joint Puller	Front drive shaft Front suspension
	09630–24014	Steering Rack Oil Seal Tool Set	Rear suspension
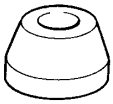	(09620–24041)	Seal Ring Guide	
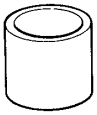	09631–12090	Seal Ring Tool	Front suspension
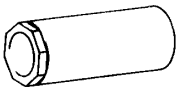	09631–20060	Bearing Guide Nut Wrench	Front suspension
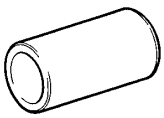	09632–36010	Steering Vane Pump Bearing Replacer	Front suspension Rear suspension
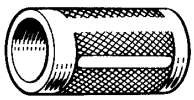	09636–20010	Upper Ball Joint Dust Cover Replacer	Front differential
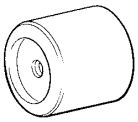	09649–17010	Steering Knuckle Tool	Front axle Rear differential
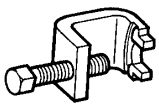	09650–17011	Hub Bolt Remover	Front axle Rear axle
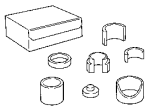	09710–28012	Front Suspension Bushing Tool Set	Rear suspension
	(09710–07062)	Bushing Replacer	
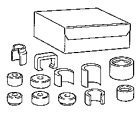	09710–30021	Suspension Bushing Tool Set	
	(09710–03051)	Bushing Replacer	Front axle Front suspension

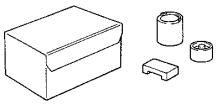	09710–30041	Rear Suspension Bushing Tool Set	Rear suspension
	(09710–03211)	Remover	
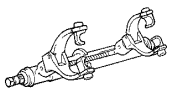	09727–30021	Coil Spring Compressor	Front suspension
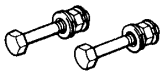	(09727–00010)	Bolt Set	
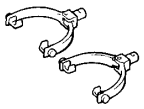	(09727–00021)	Arm Set	
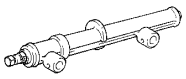	(09727–00031)	Compressor	
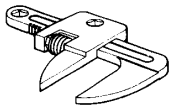	09922–10010	Variable Open Wrench	Front suspension
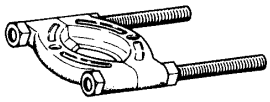	09950–00020	Bearing Remover	Front drive shaft Front differential Front suspension Rear differential
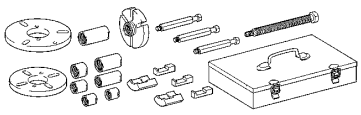	09950–30012	Puller A Set	
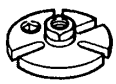	(09951–03010)	Upper Plate	Front differential Rear differential
	(09953–03010)	Center Bolt	Front differential Rear differential
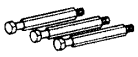	(09954–03010)	Arm	Front differential Rear differential
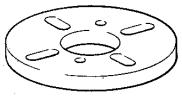	(09955–03030)	Lower Plate 130	Front differential Rear differential

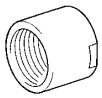	(09956–03020) Adapter 18	Front differential
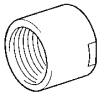	(09956–03050) Adapter 24	Rear differential
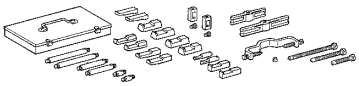	09950–40011 Puller B Set	
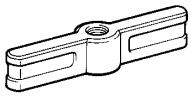	(09951–04010) Hanger 150	Front axle Front differential Front suspension Rear differential
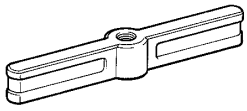	(09951–04020) Hanger 200	Front axle
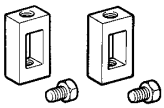	(09952–04010) Slide Arm	Front axle Front differential Front suspension Rear differential
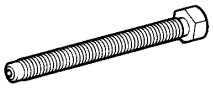	(09953–04020) Center Bolt 150	Front axle Front differential Front suspension Rear differential
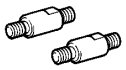	(09954–04010) Arm 25	Front axle Front differential Front suspension Rear differential
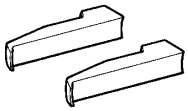	(09955–04011) Claw No.1	Front differential
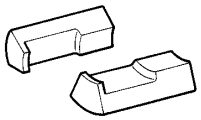	(09955–04031) Claw No.3	Front axle Front suspension
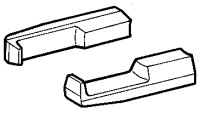	(09955–04061) Claw No.6	Front differential Rear differential
	(09957–04010) Attachment	Front axle Front differential Front suspension Rear differential
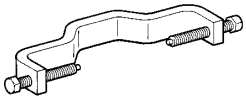	(09958–04011) Holder	Front axle Front differential Front suspension Rear differential

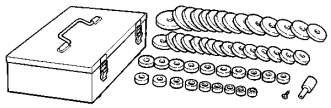	09950–60010 Replacer Set	
	(09951–00350) Replacer 35	Rear suspension
	(09951–00380) Replacer 38	Front differential
	(09951–00480) Replacer 48	Front differential Rear differential
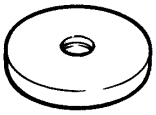	(09951–00540) Replacer 54	Front differential
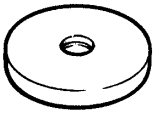	(09951–00560) Replacer 56	Rear axle
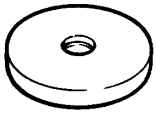	(09951–00610) Replacer 61	Rear axle
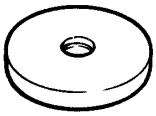	(09951–00640) Replacer 64	Rear differential
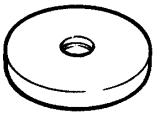	(09951–00650) Replacer 65	Front axle Front differential
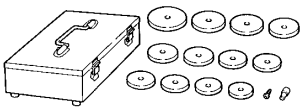	09950–60020 Replacer Set No.2	
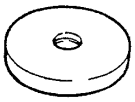	(09951–00680) Replacer 68	Front suspension
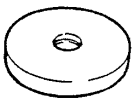	(09951–00710) Replacer 71	Rear axle Rear differential
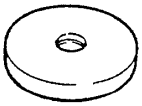	(09951–00790) Replacer 79	Front differential

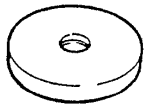	(09951–00810) Replacer 81	Front axle
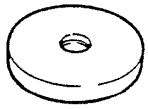	(09951–00890) Replacer 89	Rear axle
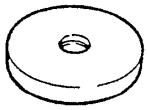	(09951–00910) Replacer 91	Front axle Rear differential
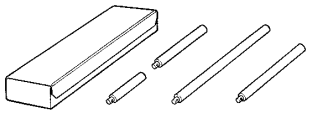	09950–70010 Handle Set	Front axle, Front differential Rear axle Rear differential Rear suspension
	(09951–07150) Handle 150	

PP099–04

RECOMMENDED TOOLS

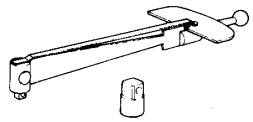	09025–00010	Torque Wrench (30 kgf–cm)	
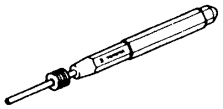	09031–00030	Pin Punch .	
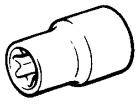	09044–00010	Torx Socket E14 .	
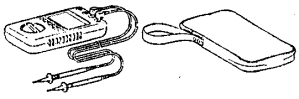	09082–00040	TOYOTA Electrical Tester.	
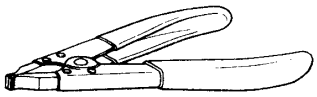	09905–00012	Snap Ring No.1 Expander .	
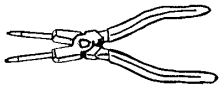	09905–00013	Snap Ring Pliers .	

PP09A–03

EQUIPMENT

Dial indicator with magnetic base	
Torque wrench	
Micrometer	
Voltmeter	
Ohmmeter	
Saw	

PP09B–07

LUBRICANT

Item		Capacity	Application
Front drive shaft			
Outboard joint grease	(Color = Black)	205 – 225 g (7.23 – 7.94 oz.)	
Inboard joint grease	(Color = Black)	190 – 210 g (6.70 – 7.41 oz.)	
Front differential Differential oil		1.15 liters (1.22 US qts. 1.01 lmp. qts)	Hypoid gear oil API GL–5 SAE 75W–90
Rear differential (Standard type)			Hypoid gear oil API GL–5
Differential oil	2WD	3.80 liters (4.02 US qts. 3.34 lmp. qts)	Above –18˚C (0˚F) SAE 90
	4WD	3.50 liters (3.70 US qts. 3.08 lmp. qts)	Below –18˚C (0˚F) SAE 80W or 80W–90
Rear differential (LSD type)			Hypoid gear oil for LSD API GL–5
Differential oil	2WD	3.15 liters (3.33 US qts. 2.77 lmp. qts)	Above –18˚C (0˚F) SAE 90
	4WD	2.95 liters (3.12 US qts. 2.60 lmp. qts)	Below –18˚C (0˚F) SAE 80W or 80W–90

PP25E–01

SSM (Special Service Materials)

08826–00090	Seal Packing 1281, THREE BOND 1281 or equivalent (FIPG)	Front differential
08833–00070	Adhesive 1324, THREE BOND 1324 or equivalent	Front differential
08833–00100	THREE BOND 1360K or equivalent	Rear differential

BRAKE

SST (Special Service Tools)

PP25C–01

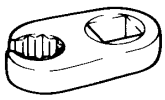	09023–00100	Union Nut Wrench 10 mm	
	09703–30010	Brake Shoe Return Spring Tool	
	09709–29018	LSPV Gauge Set	
	09718–00010	Shoe Hold Down Spring Driver	
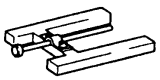	09737–00011	Brake Booster Push Rod Gauge	
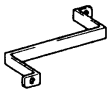	09737–00020	Brake Booster Push Rod Wrench	
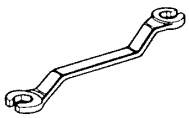	09751–36011	Brake Line Union Nut 10 x 12 mm Wrench	
	09843–18020	Diagnosis Check Wire	

PP0FB–02

RECOMMENDED TOOLS

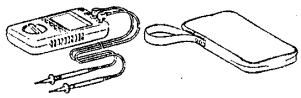	09082–00040 TOYOTA Electrical Tester.	
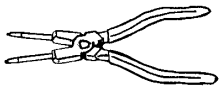	09905–00013 Snap Ring Pliers .	

PP0FC–02

EQUIPMENT

Torque wrench	
Micrometor	Brake disc
Dial indicator	Brake disc
Vernier calipers	Brake drum

PP0FD–02

LUBRICANT

Item	Capacity	Classification
Brake fluid	–	SAE J1703 or FMVSS No.116 DOT 3

STEERING

PP25H–03

SST (Special Service Tools)

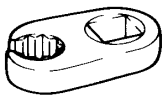	09023–12700	Union Nut Wrench 17mm	PS gear
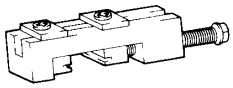	09521–24010	Drive Shaft Boot Clamping Tool	PS gear
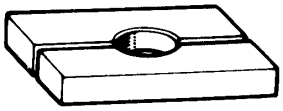	09527–20011	Rear Axle Shaft Bearing Remover	PS gear
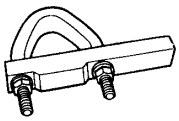	09612–00012	Rack & Pinion Steering Rack Housing Stand	PS gear
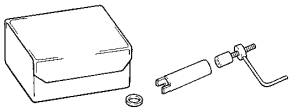	09612–07010	Main Shaft Retaining Ring Remover & Replacer	Steering column
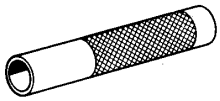	09612–22011	Tilt Handle Bearing Replacer	PS gear
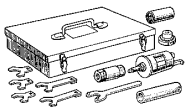	09612–24014	Steering Gear Housing Overhaul Tool Set	
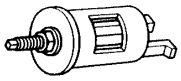	(09613–22011)	Steering Rack Shaft Bushing Puller	PS gear
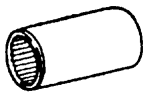	09616–00011	Steering Worm Bearing Adjusting Socket	PS gear
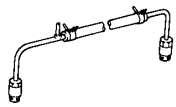	09631–12071	Steering Rack Oil Seal Test Tool	PS gear
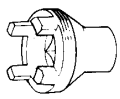	09631–16010	Cylinder End Stopper Nut Wrench	PS gear
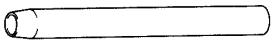	09631–20051	Steering Rack Cover "C"	PS gear

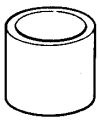	09631–20081	Seal Ring Tool	PS gear
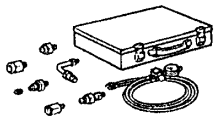	09640–10010	Power Steering Pressure Gauge Set	
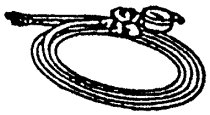	(09641–01010)	Gauge Assy	Power steering fluid
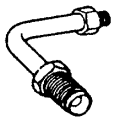	(09641–01030)	Attachment B	Power steering fluid
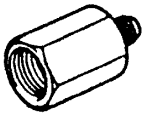	(09641–01060)	Attachment E	Power steering fluid
	09816–30010	Oil Pressure Switch Socket	PS gear
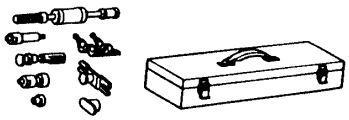	09910–00015	Puller Set	
	(09911–00011)	Puller Clamp	Steering column
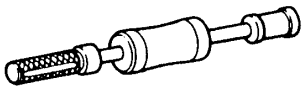	(09912–00010)	Puller Slide Hammer	Steering column
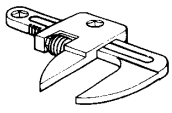	09922–10010	Variable Open Wrench	PS gear
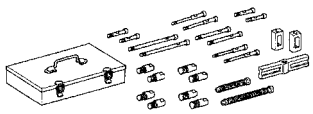	09950–50013	Puller C Set	
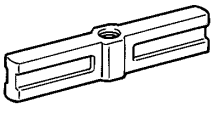	(09951–05010)	Hanger 150	Steering column
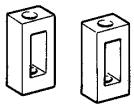	(09952–05010)	Slide Arm	Steering column

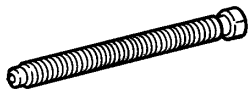	(09953–05020) Center Bolt 150	Steering column
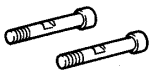	(09954–05021) Claw No.2	Steering column
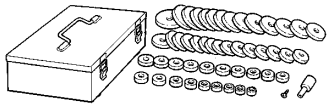	09950–60010 Replacer Set	
	(09951–00180) Replacer 18	PS gear
	(09951–00250) Replacer 25	PS gear
	(09951–00260) Replacer 26	PS gear
	(09951–00300) Replacer 30	PS gear
	(09951–00310) Replacer 31	PS gear
	(09951–00320) Replacer 32	PS gear
	(09951–00330) Replacer 33	PS vane pump (5VZ–FE, 2UZ–FE) PS gear
	(09951–00340) Replacer 34	PS gear
	(09951–00360) Replacer 36	PS gear
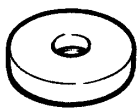	(09951–00430) Replacer 43	Steering column

	(09951–00460) Replacer 46	Steering column PS gear
	(09951–00490) Replacer 49	PS gear
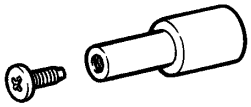	(09952–06010) Adapter	PS gear
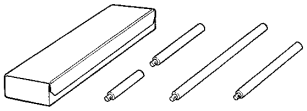	09950–70010 Handle Set	
	(09951–07100) Handle 100	PS vane pump (5VZ–FE, 2UZ–FE)
	(09951–07150) Handle 150	Steering column PS gear
	(09951–07200) Handle 200	PS gear
	(09951–07360) Handle 360	Steering column PS gear

PP25I–01

RECOMMENDED TOOLS

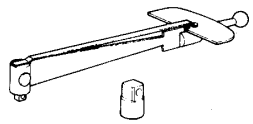	09025–00010	Torque Wrench (30 kgf–cm)	PS vane pump (5VZ–FE, 2UZ–FE) PS gear
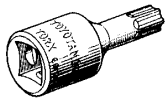	09042–00010	Torx Socket T30 .	Steering column

PP0FW–03

EQUIPMENT

Belt tension gauge	Drive belt (5VZ–FE)
Caliper gauge	PS vane pump (5VZ–FE, 2UZ–FE)
Vernier calipers	PS vane pump (5VZ–FE, 2UZ–FE)
Dial indicator	PS gear
Feeler gauge	PS vane pump (5VZ–FE, 2UZ–FE)
Micrometer	PS vane pump (5VZ–FE, 2UZ–FE)
Torque wrench	

PP0FX–03

LUBRICANT

Item	Capacity	Classification
Power steering fluid Total	1.0 liters (1.1 US qts, 0.9 Imp.qts)	ATF DEXRON® II or III

PP1B9–08

SSM (Special Service Materials)

08833–00080	Adhesive 1344 THREE BOND 1344 LOCTITE 242 or equivalent	PS gear

SUPPLEMENTAL RESTRAINT SYSTEM

PP0FR–01

SST (Special Service Tools)

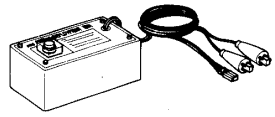	09082–00700 SRS Airbag Deployment Tool	
	09843–18020 Diagnosis Check Wire	

PP0FS–01

RECOMMENDED TOOLS

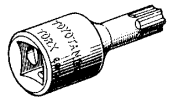	09042–00020 Torx Socket T40 .	
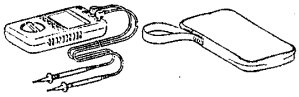	09082–00040 TOYOTA Electrical Tester.	

PP0FT–01

EQUIPMENT

Torque wrench	
Bolt: Length: 35mm (1.38 in.) Pitch: 1.0 mm (0.039 in.) Diam.: 6.0 mm (0.236 in.)	Airbag disposal
Tire Width: 185 mm (7.28 in.) Inner diam.: 360 mm (14.17 in.)	Airbag disposal
Tire with disc wheel Width: 185 mm (7.28 in.) Inner diam.: 360 mm (14.17 in.)	Airbag disposal
vinyl bag	Airbag disposal

BODY ELECTRICAL

PP06F–05

SST (Special Service Tools)

 09843–18020 Diagnosis Check Wire	

PP06G–05

RECOMMENDED TOOLS

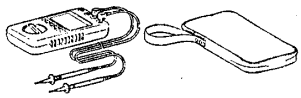	09082–00040	TOYOTA Electrical Tester.	
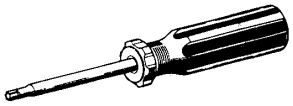	09041–00030	Torx Driver T30 .	For removing and installing steering wheel pad
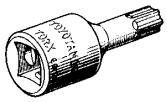	09042–00010	Torx Socket T30 .	For removing and installing steering wheel pad

PP06H–05

EQUIPMENT

Voltmeter	
Ammeter	
Ohmmeter	
Test lead	
Syphon	Brake fluid level warning switch
Bulb (3.4 W)	
Torque wrench	

BODY

PP25L–01

SST (Special Service Tools)

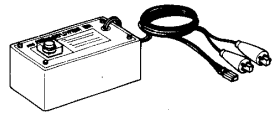	09082–00700	SRS Airbag Deployment Tool	
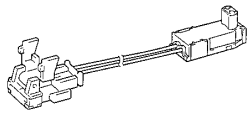	09082–00740	Airbag Deployment Wire Sub–harness No.2	
	09812–00020	Door Hinge Set Bolt Wrench	

PP25M–01

RECOMMENDED TOOLS

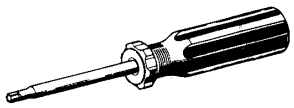	09041–00030	Torx Driver T30 .	
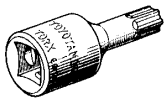	09042–00010	Torx Socket T30 .	
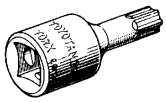	09042–00020	Torx Socket T40 .	

PP0MV–05

EQUIPMENT

Clip remover	
Torque wrench	
Torx driver	
Hog ring pliers	
Tape	To avoid surface damage
Adhesive tape	To avoid surface damage
Double – stick tape	
Adhesive	
Cleaner	
Shop rag	Regulator handle
Knife	Moulding
Heat light	Moulding
Piano wire	Windshield
Sealer gun	
Brush	
Putty spatula	
Wooden block or similar object	For tying both piano wire ends
Plastic sheet	To avoid surface damage
Rope (no projections, difficult to break)	Seat belt pretensioner disposal
Tire Width: 185 mm (7.28 in.) Inner diam.: 360 mm (14.17 in.)	Seat belt pretensioner disposal
Tire with disc wheel Width: 185 mm (7.28 in.) Inner diam.: 360 mm (14.17 in.)	Seat belt pretinsioner disposal
Vinyl bag	Seat belt pretensioner disposal

PP0MW–02

LUBRICANT

Item	Capacity	Classification
MP grease	–	–

SSM (Special Service Materials)

08833–00070	Adhesive 1324, THREE BOND 1324 or equivalent	
08833–00030	Three cement black or equivalent	
08850–00801	Windshield Glass Adhesive Set or equivalent	

AIR CONDITIONING

PP252–02

SST (Special Service Tools)

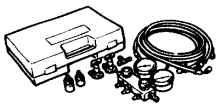	07110–58060	Air Conditioner Service Tool Set	
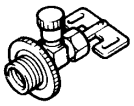	(07117–58060)	Refrigerant Drain Service Valve	
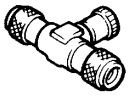	(07117–58070)	T–Joint	
	(07117–58080)	Quick Disconnect Adapter	
	(07117–58090)	Quick Disconnect Adapter	
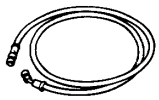	(07117–88060)	Refrigerant Charging Hose	
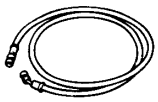	(07117–88070)	Refrigerant Charging Hose	
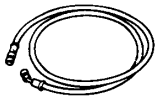	(07117–88080)	Refrigerant Charging Hose	
	07112–66040	Magnetic Clutch Remover	
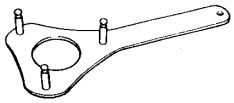	07112–76060	Magnetic Clutch Stopper	
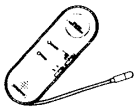	07116–38360	Gas Leak Detector Assembly	
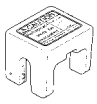	09870–00025	A/C Quick Joint Puller No.2	Liquid tube

	95994–10020	Snap Ring Pliers (DENSO Part No.)	

PP0E3–04

RECOMMENDED TOOLS

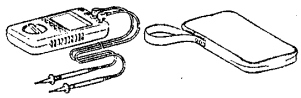	09082–00040	TOYOTA Electrical Tester.	
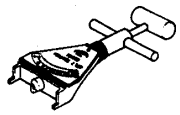	09216–00021	Belt Tension Gauge .	
	09216–00030	Belt Tension Gauge Cable .	

PP0E4–03

EQUIPMENT

Voltmeter	
Ammeter	
Ohmmeter	
Test lead	
Thermometer	Thermistor
Torque wrench	
Dial indicator	Magnetic clutch
Plastic hammer	Magnetic clutch
Hexagon wrench	Expansion valve

PP0E5–03

LUBRICANT

Item	Capacity	Classification
Compressor oil	–	ND–OIL 8 or equivalent
When replacing receiver	20 cc (0.71 fl.oz.)	
When replacing condenser	40 cc (1.4 fl. oz.)	
When replacing evaporator	40 – 50 cc (1.4 – 1.7 fl. oz.)	

STANDARD BOLT

HOW TO DETERMINE BOLT STRENGTH

SS0ZS–01

Bolt Type				Class
Hexagon Head Bolt		Stud Bolt	Weld Bolt	
Normal Recess Bolt	Deep Recess Bolt			
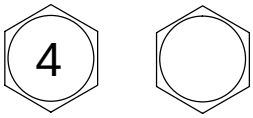 No Mark	 No Mark	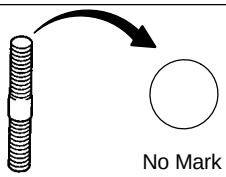 No Mark	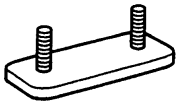	4T
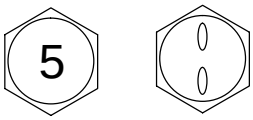	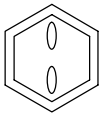			5T
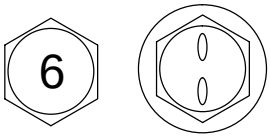 w/ Washer	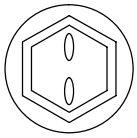 w/ Washer			6T
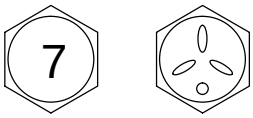	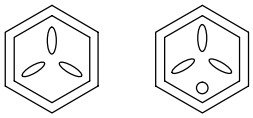			7T
				8T
				9T
	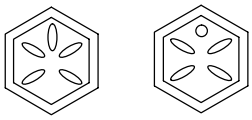			10T
	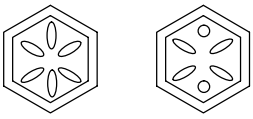			11T

B06431

SS0ZT–01

SPECIFIED TORQUE FOR STANDARD BOLTS

Class	Diameter mm	Pitch mm	Specified torque					
			Hexagon head bolt			Hexagon flange bolt		
			N·m	kgf·cm	ft·lbf	N·m	kgf·cm	ft·lbf
4T	6	1	5	55	48 in.·lbf	6	60	52 in.·lbf
	8	1.25	12.5	130	9	14	145	10
	10	1.25	26	260	19	29	290	21
	12	1.25	47	480	35	53	540	39
	14	1.5	74	760	55	84	850	61
	16	1.5	115	1,150	83	–	–	–
5T	6	1	6.5	65	56 in.·lbf	7.5	75	65 in.·lbf
	8	1.25	15.5	160	12	17.5	175	13
	10	1.25	32	330	24	36	360	26
	12	1.25	59	600	43	65	670	48
	14	1.5	91	930	67	100	1,050	76
	16	1.5	140	1,400	101	–	–	–
6T	6	1	8	80	69 in.·lbf	9	90	78 in.·lbf
	8	1.25	19	195	14	21	210	15
	10	1.25	39	400	29	44	440	32
	12	1.25	71	730	53	80	810	59
	14	1.5	110	1,100	80	125	1,250	90
	16	1.5	170	1,750	127	–	–	–
7T	6	1	10.5	110	8	12	120	9
	8	1.25	25	260	19	28	290	21
	10	1.25	52	530	38	58	590	43
	12	1.25	95	970	70	105	1,050	76
	14	1.5	145	1,500	108	165	1,700	123
	16	1.5	230	2,300	166	–	–	–
8T	8	1.25	29	300	22	33	330	24
	10	1.25	61	620	45	68	690	50
	12	1.25	110	1,100	80	120	1,250	90
9T	8	1.25	34	340	25	37	380	27
	10	1.25	70	710	51	78	790	57
	12	1.25	125	1,300	94	140	1,450	105
10T	8	1.25	38	390	28	42	430	31
	10	1.25	78	800	58	88	890	64
	12	1.25	140	1,450	105	155	1,600	116
11T	8	1.25	42	430	31	47	480	35
	10	1.25	87	890	64	97	990	72
	12	1.25	155	1,600	116	175	1,800	130

SS0ZU–01

HOW TO DETERMINE NUT STRENGTH

Nut Type			Class
Present Standard Hexagon Nut	Old Standard Hexagon Nut		
	Cold Forging Nut	Cutting Processed Nut	
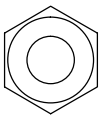 No Mark			4N
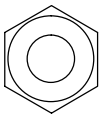 No Mark (w/ Washer)	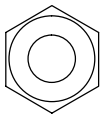 No Mark (w/ Washer)	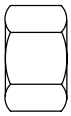 No Mark	5N (4T)
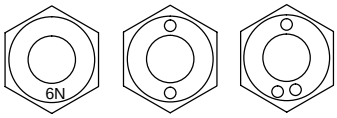 6N			6N
	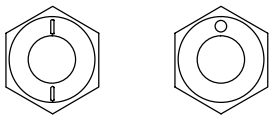	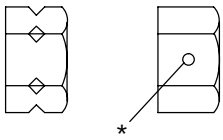 *	7N (5T)
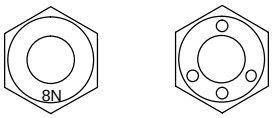 8N			8N
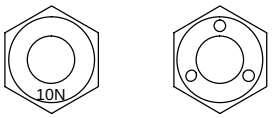 10N	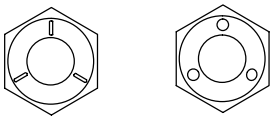	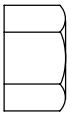 No Mark	10N (7T)
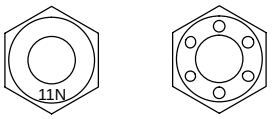 11N			11N
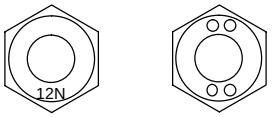 12N			12N

*: Nut with 1 or more marks on one side surface of the nut.

B06432

HINT:

Use the nut with the same number of the nut strength classification or the greater than the bolt strength classification number when tightening parts with a bolt and nut.

Example: Bolt = 4T

Nut = 4N or more

ENGINE MECHANICAL (5VZ–FE)

SS00O–05

SERVICE DATA

Compression pressure		at 250 rpm STD	1,200 kPa (12.2 kgf/cm^2, 174 psi) or more
		Minimum	1,000 kPa (10.2 kgf/cm^2, 145 psi)
	Difference of pressure between each cylinder		100 kPa (1.0 kgf/cm^2, 15 psi) or less
Valve clearance		at cold Intake	0.13 – 0.23 mm (0.006 – 0.009 in.)
		Exhaust	0.27 – 0.37 mm (0.011 – 0.014 in.)
	Adjusting shim for repair part	Mark 2.500	2.500 mm (0.0984 in.)
		2.550	2.550 mm (0.1004 in.)
		2.600	2.600 mm (0.1024 in.)
		2.650	2.650 mm (0.1043 in.)
		2.700	2.700 mm (0.1063 in.)
		2.750	2.750 mm (0.1083 in.)
		2.800	2.800 mm (0.1102 in.)
		2.850	2.850 mm (0.1122 in.)
		2.900	2.900 mm (0.1142 in.)
		2.950	2.950 mm (0.1161 in.)
		3.000	3.000 mm (0.1181 in.)
		3.050	3.050 mm (0.1201 in.)
		3.100	3.100 mm (0.1220 in.)
		3.150	3.150 mm (0.1240 in.)
		3.200	3.200 mm (0.1260 in.)
		3.250	3.250 mm (0.1280 in.)
		3.300	3.300 mm (0.1299 in.)
Ignition timing	w/ Terminals TC and CG connected of DLC3		8 – 12˚ BTDC @ idle
Idle speed	–		700 ± 50 rpm
Timing belt tensioner	Protrusion from housing side		10.0 – 10.8 mm (0.394 – 0.425 in.)
Cylinder head	Warpage	Maximum	0.10 mm (0.0039 in.)
	Valve seat		
	Refacing angle		30˚, 45˚, 60˚
	Contacting angle		45˚
	Contacting width		1.0 – 1.4 mm (0.039 – 0.055 in.)
	Valve guide bushing bore diameter	STD	10.985 – 11.027 mm (0.4325 – 0.4341 in.)
		O/S 0.05	11.050 – 11.077 mm (0.4350 – 0.4361 in.)
Valve guide bushing	Inside diameter		6.010 – 6.030 mm (0.2366 – 0.2374 in.)
	Outside diameter for repair part	STD	11.033 – 11.044 mm (0.4344 – 0.4348 in.)
		O/S 0.05	11.083 – 11.094 mm (0.4363 – 0.4368 in.)
Valve	Valve overall length	STD Intake	95.15 mm (3.7461 in.)
		Exhaust	94.90 mm (3.7362 in.)
		Minimum Intake	94.60 mm (3.7244 in.)
		Exhaust	94.40 mm (3.7165 in.)
	Valve face angle		44.5˚
	Stem diameter	Intake	5.970 – 5.985 mm (0.2350 – 0.2356 in.)
		Exhaust	5.965 – 5.980 mm (0.2348 – 0.2354 in.)
	Stem oil clearance	STD Intake	0.025 – 0.060 mm (0.0010 – 0.0024 in.)
		Exhaust	0.030 – 0.065 mm (0.0012 – 0.0026 in.)
		Maximum Intake	0.08 mm (0.0031 in.)
		Exhaust	0.10 mm (0.0039 in.)
	Margin thickness	STD	1.0 mm (0.039 in.)
		Minimum	0.5 mm (0.020 in.)
Valve spring	Deviation	Maximum	2.0 mm (0.079 in.)
	Free length		44.78 mm (1.7630 in.)
	Installed tension	at 33.3 mm (1.311 in.)	186 – 206 N (19.0 – 21.0 kgf, 41.9 – 46.3 lbf)

Valve lifter	Lifter diameter		30.966 – 30.976 mm (1.2191 – 2.2195 in.)
	Lifter bore diameter		31.000 – 31.018 mm (1.2205 – 1.2212 in.)
	Oil clearance	STD	0.024 – 0.052 mm (0.0009 – 0.0020 in.)
		Maximum	0.08 mm (0.0031 in.)
Camshaft	Thrust clearance	STD	0.033 – 0.080 mm (0.0013 – 0.0031 in.)
		Maximum	0.12 mm (0.0047 in.)
	Journal oil clearance	STD	0.035 – 0.072 mm (0.0014 – 0.0028 in.)
		Maximum	0.10 mm (0.0039 in.)
	Journal diameter		26.949 – 26.965 mm (1.0610 – 1.0616 in.)
	Circle runout	Maximum	0.06 mm (0.0024 in.)
	Cam lobe height	STD Intake	42.31 – 42.41 mm (1.6657 – 1.6697 in.)
		Exhaust	41.96 – 42.06 mm (1.6520 – 1.6559 in.)
		Minimum Intake	42.16 mm (1.6598 in.)
		Exhaust	41.81 mm (1.6461 in.)
	Camshaft gear backlash	STD	0.020 – 0.200 mm (0.0008 – 0.0079 in.)
		Maximum	0.30 mm (0.0188 in.)
	Camshaft gear spring end free distance		18.2 – 18.8 mm (0.712 – 0.740 in.)
Air intake chamber	Warpage	Maximum	0.10 mm (0.0039 in.)
Intake air connector	Warpage	Maximum	0.10 mm (0.0039 in.)
Intake manifold	Warpage	Maximum	0.10 mm (0.0039 in.)
Exhaust manifold	Warpage	Maximum	1.00 mm (0.0394 in.)
Cylinder block	Cylinder head surface warpage	Maximum	0.05 mm (0.0020 in.)
	Cylinder bore diameter	STD Mark 1	93.500 – 93.510 mm (3.6811 – 3.6815 in.)
		2	93.510 – 93.520 mm (3.6815 – 3.6819 in.)
		3	93.520 – 93.530 mm (3.6819 – 3.6823 in.)
		Maximum STD	93.730 mm (3.6902 in.)
		O/S 0.50	94.230 mm (3.7098 in.)
Piston and piston ring	Piston diameter	STD Mark 1	93.356 – 93.366 mm (3.6754 – 3.6758 in.)
		2	93.367 – 93.376 mm (3.6759 – 3.6762 in.)
		3	93.377 – 93.386 mm (3.6763 – 3.6766 in.)
		O/S 0.50	93.856 – 93.886 mm (3.6951 – 3.6963 in.)
	Piston oil clearance	STD	0.134 – 0.154 mm (0.0053 – 0.0060 in.)
		Maximum	0.174 mm (0.0069 in.)
	Piston ring groove clearance	No. 1	0.040 – 0.080 mm (0.0016 – 0.0031 in.)
		No. 2	0.030 – 0.070 mm (0.0012 – 0.0028 in.)
	Piston ring end gap	STD No. 1	0.300 – 0.500 mm (0.0118 – 0.0197 in.)
		No. 2	0.400 – 0.600 mm (0.0157 – 0.0236 in.)
		Oil	0.150 – 0.550 mm (0.0059 – 0.0217 in.)
		Maximum No. 1	1.100 mm (0.0433 in.)
		No. 2	1.200 mm (0.0472 in.)
		Oil	1.150 mm (0.0453 in.)

Connecting rod	Thrust clearance	STD	0.150 – 0.330 mm (0.0059 – 0.0130 in.)
		Maximum	0.38 mm (0.0150 in.)
	Connecting rod bearing center wall thickness (Reference)		
		Mark 1	1.484 – 1.488 mm (0.0584 – 0.0586 in.)
		2	1.488 – 1.492 mm (0.0586 – 0.0587 in.)
		3	1.492 – 1.496 mm (0.0587 – 0.0589 in.)
	Connecting rod oil clearance	STD	0.024 – 0.053 mm (0.0009 – 0.0021 in.)
		O/S 0.25	0.023 – 0.069 mm (0.0009 – 0.0027 in.)
		Maximum	0.08 mm (0.0031 in.)
	Rod bend	Maximum per 100 mm (3.94 in.)	0.05 mm (0.0020 in.)
	Rod twist	Maximum per 100 mm (3.94 in.)	0.15 mm (0.0059 in.)
	Bushing inside diameter		22.005 – 22.017 mm (0.8663 – 0.8668 in.)
	Piston pin diameter		21.997 – 22.009 mm (0.8660 – 0.8665 in.)
	Bushing oil clearance	STD	0.005 – 0.011 mm (0.0002 – 0.0004 in)
		Maximum	0.05 mm (0.0020 in.)
	Connecting rod bolt outer diameter	STD	7.860 – 8.000 mm (0.3094 – 0.3150 in.)
		Minimum	7.600 mm (0.2992 in.)
Crankshaft	Thrust clearance	STD	0.020 – 0.220 mm (0.0008 – 0.0087 in.)
		Maximum	0.30 mm (0.0118 in.)
	Thrust washer thickness		2.440 – 2.490 mm (0.0961 – 0.0980 in.)
	Main journal oil clearance	No. 1 STD	0.020 – 0.038 mm (0.0008 – 0.0015 in.)
		U/S 0.25	0.019 – 0.059 mm (0.0007 – 0.0023 in.)
		Others STD	0.024 – 0.042 mm (0.0009 – 0.0017 in.)
		U/S 0.25	0.023 – 0.063 mm (0.0009 – 0.0025 in.)
		Maximum	0.08 mm (0.0031 in.)
	Main journal diameter	STD	63.985 – 64.000 mm (2.5191 – 2.5197 in.)
		U/S 0.25	63.745 – 63.755 mm (2.5096 – 2.5100 in.)
	Main bearing center wall thickness (Reference)		
		No. 1 Mark 1	1.991 – 1.994 mm (0.0784 – 0.0785 in.)
		2	1.994 – 1.997 mm (0.0785 – 0.0786 in.)
		3	1.997 – 2.000 mm (0.0786 – 0.0787 in.)
		4	2.000 – 2.003 mm (0.0787 – 0.0789 in.)
		5	2.003 – 2.006 mm (0.0789 – 0.0790 in.)
		Others Mark 1	1.989 – 1.992 mm (0.0783 – 0.0784 in.)
		2	1.992 – 1.995 mm (0.0784 – 0.0785 in.)
		3	1.995 – 1.998 mm (0.0785 – 0.0787 in.)
		4	1.998 – 2.001 mm (0.0787 – 0.0788 in.)
		5	2.001 – 2.004 mm (0.0788 – 0.0789 in.)
	Crank pin diameter	STD	54.987 – 55.000 mm (2.1648 – 2.1654 in.)
		U/S 0.25	54.745 – 54.755 mm (2.1553 – 2.1557 in.)
	Circle runout	Maximum	0.06 mm (0.0024 in.)
	Main journal taper and out–of–round	Maximum	0.02 mm (0.0008 in.)
	Crank pin taper and out–of–round	Maximum	0.02 mm (0.0008 in.)

SS00P–05

TORQUE SPECIFICATION

Part tightened		N·m	kgf·cm	ft·lbf
No. 1 idler pulley x Oil pump		35	350	26
No. 2 idler pulley x No. 2 idler pulley bracket		40	400	30
No. 1 timing belt cover x Oil pump		9	90	80 in.·lbf
Crankshaft pulley x Crankshaft		295	2,950	217
Camshaft timing pulley x Camshaft		110	1,100	81
Timing belt tensioner x Oil pump		27	275	20
No. 2 timing belt cover x No. 3 timing belt cover		9	90	80 in.·lbf
Oil dipstick guide x Generator bracket		8	80	71 in.·lbf
Fluid coupling x Fan bracket		5.4	54	48 in.·lbf
A/C compressor bracket x Cylinder block		47	479	35
A/C compressor x A/C compressor bracket		25	250	18
PS pump x PS pump bracket		43	440	31
Camshaft bearing cap x Cylinder head		16	160	12
Rear plate x Cylinder head		8	80	71 in.·lbf
Cylinder head x Cylinder block	12 pointed head 1st 2nd 3rd Recessed head	34 Turn 90° Turn 90° 18	350 Turn 90° Turn 90° 185	25 Turn 90° Turn 90° 13
Cylinder head cover x Cylinder head		6	60	53 in.·lbf
Exhaust manifold x Cylinder head		40	400	30
Exhaust manifold heat insulator x Exhaust manifold		8	80	71 in.·lbf
Exhaust crossover pipe x Exhaust manifold		45	450	33
Generator bracket x LH cylinder head		18.5	185	14
PS pump bracket x RH cylinder head		18.5	185	14
Intake manifold, Intake manifold stay x Cylinder head		18	180	13
No. 3 timing belt cover x Cylinder head		9	90	80 in.·lbf
Camshaft position sensor x RH cylinder head		8	80	71 in.·lbf
Intake air connector x Intake manifold		18.5	180	13
Air intake chamber x Intake air connector		18.5	180	13
Air intake chamber stay x Air intake chamber		18.5	180	13
Air intake chamber stay x LH cylinder head		40	400	30
No. 2 engine hanger x RH cylinder head		40	400	30
Frame crossmember x Engine rear mounting bracket		58	590	43
Engine rear mounting bracket x Engine rear mounting insulator		18	185	13
Engine front mounting insulator x Frame		38	387	28
Connecting rod cap x Connecting rod	1st 2nd	25 Turn 90°	250 Turn 90°	18 Turn 90°
Main bearing cap x Cylinder block	1st 2nd	61 Turn 90°	625 Turn 90°	45 Turn 90°
Rear oil seal retainer x Cylinder block		8	80	71 in.·lbf
Engine coolant drain cock x Cylinder block		39	400	29
Engine mounting bracket x Cylinder block		44	440	32
Oil filter union x Cylinder block		25	250	18
Oil pressure switch x Cylinder block		15	150	11

Generator adjusting bar x Cylinder block	42	420	31
No. 2 idler pulley bracket x Cylinder block	38	380	28
Water bypass pipe x Cylinder block	8.5	85	75 in.·lbf
Rear end plate x Cylinder block	7.5	75	66 in.·lbf
Drive plate x Crankshaft	83	850	61
Flywheel x Crankshaft	85	850	63

ENGINE MECHANICAL (2UZ–FE)

SS0OQ–07

SERVICE DATA

Compression pressure	at 250 rpm STD	1,324 kPa (13.5 kgf/cm^2, 192 psi) or more
	Minimum	981 kPa (10.0 kgf/cm^2, 142 psi)
	Difference of pressure between each cylinder	98 kPa (1.0 kgf/cm^2, 14 psi) or less
Valve clearance	at cold Intake	0.15 – 0.25 mm (0.006 – 0.010 in.)
	Exhaust	0.25 – 0.35 mm (0.010 – 0.014 in.)
	Valve clearance adjusting shim No. 00	2.000 mm (0.0787 in.)
	02	2.020 mm (0.0795 in.)
	04	2.040 mm (0.0803 in.)
	06	2.060 mm (0.0811 in.)
	08	2.080 mm (0.0819 in.)
	10	2.100 mm (0.0827 in.)
	12	2.120 mm (0.0835 in.)
	14	2.140 mm (0.0843 in.)
	16	2.160 mm (0.0850 in.)
	18	2.180 mm (0.0858 in.)
	20	2.200 mm (0.0866 in.)
	22	2.220 mm (0.0874 in.)
	24	2.240 mm (0.0882 in.)
	26	2.260 mm (0.0890 in.)
	28	2.280 mm (0.0898 in.)
	30	2.300 mm (0.0906 in.)
	32	2.320 mm (0.0913 in.)
	34	2.340 mm (0.0921 in.)
	36	2.360 mm (0.0929 in.)
	38	2.380 mm (0.0937 in.)
	40	2.400 mm (0.0945 in.)
	42	2.420 mm (0.0953 in.)
	44	2.440 mm (0.0961 in.)
	46	2.460 mm (0.0969 in.)
	48	2.480 mm (0.0976 in.)
	50	2.500 mm (0.0984 in.)
	52	2.520 mm (0.0992 in.)
	54	2.540 mm (0.1000 in)
	56	2.560 mm (0.1008 in.)
	58	2.580 mm (0.1016 in.)
	60	2.600 mm (0.1024 in.)
	62	2.620 mm (0.1031 in.)
	64	2.640 mm (0.1039 in.)
	66	2.660 mm (0.1047 in.)
	68	2.680 mm (0.1055 in.)
	70	2.700 mm (0.1063 in.)
	72	2.720 mm (0.1071 in.)
	74	2.740 mm (0.1079 in.)
	76	2.760 mm (0.1087 in.)
	78	2.780 mm (0.1094 in.)
	80	2.800 mm (0.1102 in.)
Ignition timing	w/ Terminals TC and CG connected of DLC3	8 –12° BTDC @ idle
Idle speed	–	700 ± 50 rpm
Timing belt tensioner	Protrusion from housing end	10.5 – 11.5 mm (0.413 – 0.453 in.)

Cylinder head	Warpage	Maximum	0.10 mm (0.039 in.)
	Valve seat		
	Refacing angle		30°, 45°, 60°
	Contacting angle		45°
	Contacting width		1.0 – 1.4 mm (0.039 – 0.055 in.)
	Valve guide bushing bore diameter	STD	10.285 – 10.306 mm (0.4049 – 0.4057 in.)
		O/S 0.05	10.335 – 10.356 mm (0.4069 – 0.4077 in.)
	Cylinder head bolt thread inside diameter	STD	9.810 – 9.960 mm (0.3862 – 0.3921 in.)
		Minimum	9.70 mm (0.3819 in.)
	Protrusion height	Intake	9.2 – 9.8 mm (0.362 – 0.386 in.)
		Exhaust	8.2 – 8.8 mm (0.323 – 0.346 in.)
Valve guide bushing	Inside diameter		5.510 – 5.530 mm (0.2169 – 0.2374 in.)
	Outside diameter (for repair part)	STD	10.333 – 10.344 mm (0.4068 – 0.4072 in.)
		O/S 0.05	10.383 – 10.394 mm (0.4088 – 0.4092 in.)
Valve	Valve overall length	STD Intake	95.05 mm (3.7421 in.)
		Exhaust	95.10 (3.7441 in.)
		Minimum Intake	94.55 mm (3.7224 in.)
		Exhaust	94.60 mm (3.7244 in.)
	Valve face angle		44.5°
	Stem diameter	Intake	5.470 – 5.485 mm (0.2154 – 0.2159 in.)
		Exhaust	5.465 – 5.480 mm (0.2152 – 0.2157 in.)
	Stem oil clearance	STD Intake	0.025 – 0.060 mm (0.0010 – 0.0024 in.)
		Exhaust	0.030 – 0.065 mm (0.0012 – 0.0026 in.)
		Maximum Intake	0.08 mm (0.0031 in.)
		Exhaust	0.10 mm (0.0039 in.)
	Margin thickness	STD Intake	1.00 mm (0.039 in.)
		Exhaust	1.00 mm (0.039 in.)
		Minimum	0.5 mm (0.020 in.)
Valve spring	Deviation	Maximum	2.0 mm (0.079 in.)
	Free length		54.1 mm (2.130 in.)
	Installed tension at 35.0 mm (1.378 in.)		204 – 226 N (20.8 – 23.0 kgf·cm, 45.9 – 50.7 lbf)
Valve lifter	Lifter diameter		30.966 – 30.976 mm (1.2191 – 2.2195 in.)
	Lifter bore diameter		31.000 – 31.016 mm (1.2205 – 1.2211 in.)
	Oil clearance	STD	0.024 – 0.050 mm (0.0009 – 0.0020 in.)
		Maximum	0.07 mm (0.0028 in.)
Camshaft	Thrust clearance	STD Intake	0.040 – 0.085 mm (0.0016 – 0.0033 in.)
		Exhaust	0.030 – 0.075 mm (0.0011 – 0.0030 in.)
		Maximum	0.12 mm (0.0047 in.)
	Journal oil clearance	STD	0.030 – 0.067 mm (0.0012 – 0.0026 in.)
		Maximum	0.10 mm (0.0039 in.)
	Journal diameter		26.954 – 26.970 mm (1.0612 – 1.0618 in.)
	Circle runout		0.08 mm (0.0031 in.)
	Cam lobe height	STD Intake	41.94 – 42.04 mm (1.6512 – 1.6551 in.)
		Exhaust	41.96 – 42.06 mm (1.6520 – 1.6559 in.)
		Minimum Intake	41.79 mm (1.6453 in.)
		Exhaust	41.81 mm (1/6461 in.)
	Camshaft gear backlash	STD	0.020 – 0.200 mm (0.0008 – 0.0079 in.)
		Maximum	0.30 mm (0.0188 in.)
	Camshaft gear spring end free distance		18.2 – 18.8 mm (0.712 – 0.740 in.)
Manifold	Warpage	Maximum Intake	0.15 mm (0.0059 in.)
		Exhaust	0.50 mm (0.0197 in.)

Cylinder block	Cylinder head surface warpage	Maximum	0.07 mm (0.0028 in.)
	Cylinder bore diameter	STD STD Mark 1	94.002 – 94.010 mm (3.7009 – 3.7012 in.)
		2	94.010 – 94.023 mm (3.7012 – 3.7017 in.)
		3	94.023 – 94.031 mm (3.7017 – 3.7020 in.)
		Maximum STD	94.231 mm (3.7099 in.)
		O/S 050	94.731 mm (3.7296 in.)
	Main bearing cap bolt tension portion diameter	STD	10.760 – 10.970 mm (0.4236 – 0.4319 in.)
		Minimum	10.40 mm (0.4094 in.)
Piston and piston ring	Piston diameter	STD Mark 1	93.902 – 93.912 mm (3.6969 – 3.6973 in.)
		2	93.912 – 93.920 mm (3.6973 – 3.6976 in.)
		3	93.920 – 93.930 mm (3.6976 – 3.6980 in.)
		O/S 0.50	94.402 – 94.430 mm (3.7166 – 3.7177 in.)
	Piston oil clearance	STD	0.090 – 0.111 mm (0.0035 – 0.0044 in.)
		Maximum	0.13 mm (0.0051 in.)
	Piston ring groove clearance	No. 1	0.030 – 0.080 mm (0.0012 – 0.0031 in.)
		No. 2	0.030 – 0.070 mm (0.0012 – 0.0028 in.)
	Piston ring end gap	STD No. 1	0.300 – 0.500 mm (0.0118 – 0.0197 in.)
		No. 2	0.400 – 0.650 mm (0.0157 – 0.0256 in.)
		Oil	0.130 – 0.480 mm (0.0051 – 0.0189 in.)
		Maximum No. 1	1.10 mm (0.0433 in.)
		No. 2	1.20 mm (0.0472 in.)
		Oil	1.15 mm (0.0453 in.)
Connecting rod	Thrust clearance	STD	0.160 – 0.290 mm (0.0063 – 0.0138 in.)
		Maximum	0.35 mm (0.0138 in.)
	Connecting rod thickness		22.880 – 22.920 mm (0.9008 – 0.9024 in.)
	Connecting rod oil clearance	STD	0.027 – 0.053 mm (0.0011 – 0.0021 in.)
		Maximum	0.065 mm (0.0026 in.)
	Connecting rod bearing center wall thickness (Reference)		
		Mark 2	1.484 – 1.487 mm (0.0584 – 0.0585 in.)
		3	1.487 – 1.490 mm (0.0585 – 0.0587 in.)
		4	1.490 – 1.493 mm (0.0587 – 0.0588 in.)
		5	1.493 – 1.496 mm (0.0588 – 0.0589 in.)
		6	1.496 – 1.499 mm (0.0589 – 0.0590 in.)
		7	1.499 – 1.502 mm (0.0590 – 0.0591 in.)
	Rod bend	Maximum per 100 mm (3.94 in.)	0.05 mm (0.0020 in.)
	Rod twist	Maximum per 100 mm (3.94 in.)	0.15 mm (0.0059 in.)
	Bushing inside diameter		22.005 – 22.014 mm (0.8663 – 0.8667 in.)
	Piston pin diameter		21.997 – 22.006 mm (0.8660 – 0.8664 in.)
	Bushing oil clearance	STD	0.005 – 0.011 mm (0.0002 – 0.0004 in)
		Maximum	0.05 mm (0.0020 in.)
	Connecting rod bolt tension portion diameter	STD	7.200 – 7.300 mm (0.2835 – 0.2874 in.)
		Minimum	7.00 mm (0.2756 in.)
Crankshaft	Thrust clearance	STD	0.020 – 0.220 mm (0.0008 – 0.0087 in.)
		Maximum	0.30 mm (0.0118 in.)
	Thrust washer thickness		2.440 – 2.490 mm (0.0961 – 0.0980 in.)
	Main journal bore diameter on cylinder block (with main bearing)		66.986 – 67.000 mm (2.6372 – 2.6378 in.)
	Main journal oil clearance	STD	0.040 – 0.058 mm (0.0016 – 0.0023 in.)
		Maximum	0.070 mm (0.0028 in.)
	Main journal diameter		66.988 – 67.000 mm (2.6373 – 2.6378 in.)

Crankshaft (cont'd)	Main bearing center wall thickness (Reference)		
	No. 1 and No. 5	Mark 3	2.481 – 2.484 mm (0.0977 – 0.0978 in.)
		4	2.484 – 2.487 mm (0.0978 – 0.0979 in.)
		5	2.487 – 2.490 mm (0.0979 – 0.0980 in.)
		6	2.490 – 2.493 mm (0.0980 – 0.0981 in.)
		7	2.493 – 2.496 mm (0.0981 – 0.0983 in.)
	Others	Mark 1	2.481 – 2.484 mm (0.0977 – 0.0978 in.)
		2	2.484 – 2.487 mm (0.0978 – 0.0979 in.)
		3	2.487 – 2.490 mm (0.0979 – 0.0980 in.)
		4	2.490 – 2.493 mm (0.0980 – 0.0981 in.)
		5	2.493 – 2.496 mm (0.0981 – 0.0983 in.)
	Crank pin diameter		51.982 – 52.000 mm (2.0465 – 2.0472 in.)
	Circle runout	Maximum	0.08 mm (0.0031 in.)
	Main journal taper and out–of–round	Maximum	0.02 mm (0.0008 in.)
	Crank pin taper and out–of–round	Maximum	0.02 mm (0.0008 in.)

SS0OR–08

TORQUE SPECIFICATION

Part tightened		N·m	kgf·cm	ft·lbf
Radiator assembly x Body		12	122	9
A/C Compressor x Cylinder block		49	500	36
Generator x Generator bracket		39	400	29
No. 1 idler pulley, No. 2 idler pulley x Cylinder Block		34.5	350	25
Camshaft timing pulley x Camshaft timing tube		108	1,100	80
Drive belt tensioner x Cylinder block		16	160	12
Timing belt tensioner x Oil pump		26	270	19
Crankshaft pulley x Crankshaft		245	2,500	181
Fan bracket x Cylinder block	12 mm head 14 mm head	16 32	160 330	12 24
No. 2 timing belt cover x Cylinder block		16	160	12
No. 3 timing belt cover x Cylinder block, cylinder head		7.5	80	66 in.·lbf
Drive belt idler pulley x Fan bracket		37	380	27
Fluid coupling x Fan bracket		29	296	21
Exhaust manifold x Cylinder head		44	450	33
Cylinder head x Cylinder block	1st 2nd 3rd	32 Turn 90° Turn 90°	325 Turn 90° Turn 90°	24 Turn 90° Turn 90°
Camshaft bearing cap x Cylinder head	Bolt C Others	7.5 16	80 160	66 in.·lbf 12
Cylinder head cover x Cylinder head		6.0	60	53 in.·lbf
Engine hanger x Cylinder head		37	380	27
Front water bypass joint, Rear water bypass joint x Cylinder head		18	185	13
Intake manifold x Cylinder head		18	185	13
Throttle body cover bracket x Intake manifold		7.5	80	66 in.·lbf
Accelerator cable bracket x Intake manifold		18	185	13
Timing belt rear plate x Cylinder head		7.5	80	66 in.·lbf
Drive plate x Crankshaft	1st 2nd	49 Turn 90°	500 Turn 90°	36 Turn 90°
Transmission x Cylinder block		72	730	53
Transmission x No. 1 oil pan		37	380	27
Drive plate x Torque converter clutch		48	490	35
Flywheel housing under cover x Transmission		18	185	13
Frame crossmember x Body		72	730	53
Frame crossmember x Rear engine mounting bracket		18	183	13
Frame bracket x Engine mounting bracket		38	388	28
PS pump x Cylinder head		17	175	13
A/C compressor x Cylinder block, Fan bracket		49	500	36
Main bearing cap x Cylinder block	1st 2nd	27 Turn 90°	275 Turn 90°	20 Turn 90°
Connecting rod cap x Connecting rod	1st 2nd	24.5 Turn 90°	250 Turn 90°	18 Turn 90°
Rear oil seal retainer x Cylinder block		8.0	80	71 in.·lbf
Engine coolant drain union x Cylinder block		49	500	36
Engine mounting bracket x Cylinder block		36	370	27

Water bypass pipe x Cylinder block	18	185	13
Front exhaust pipe x Exhaust manifold	62	630	46
No. 2 front exhaust pipe x Front exhaust pipe	40	408	30
Center exhaust pipe x Front exhaust pipe	40	408	30
Heated oxygen sensor (Bank 1, 2 sensor 2) x Front exhaust pipe	20	200	14
Engine rear mounting bracket x Transmission	65	663	48
Heat insulator x RH exhaust manifold	7.5	80	66 in.·lbf
Heat insulator x LH exhaust manifold	7.5	80	66 in.·lbf

EMISSION CONTROL (5VZ–FE)

TORQUE SPECIFICATION

SS00R–13

Part tightened	N·m	kgf·cm	ft·lbf
Charcoal canister x Charcoal canister bracket	14.7	150	11
Charcoal canister bracket x Body	20	204	15
Front exhaust pipe x Exhaust crossover pipe	62	632	46
Front exhaust pipe x Center exhaust pipe	48	490	35
Center exhaust pipe x Tailpipe	32	326	24
Heated oxygen sensor x Exhaust pipe	20	200	14
A/F sensor x Front exhaust pipe	20	200	14

EMISSION CONTROL (2UZ–FE)

SS0O5–04

TORQUE SPECIFICATION

Part tightened	N·m	kgf·cm	ft·lbf
PCV valve x LH cylinder head cover	27	275	20
Charcoal canister x Charcoal canister bracket	14.7	150	11
Charcoal canister bracket x Body	20	204	15
Front exhaust pipe x Exhaust manifold	62	632	46
Front exhaust pipe x Center exhaust pipe	48	490	35
Heated oxygen sensor x Front exhaust pipe	20	200	14

SFI (5VZ–FE)

SS00U–13

SERVICE DATA

Fuel pressure regulator	Fuel pressure	at no vacuum no vacuum	265 – 304 kPa (2.7 – 3.1 kgf/cm^2, 38 – 44 psi) 226 – 265 kPa (2.3 – 2.7 kgf/cm^2, 33 – 38 psi)
Fuel pump	Resistance	at 20°C (68°F)	0.2 – 3.0 Ω
Injector	Resistance Injection volume Difference between each cylinder Fuel leakage	at 20°C (68°F)	13.4 – 14.2 Ω 56 – 69 cm^3 (3.4 – 4.3 cu in.) per 15 sec. 13 cm^3 (0.8 cu in.) or less 1 drop or less per 12 min.
MAF meter	Resistance (THA – E2)	at –20°C (–4°F) at 20°C (68°F) at 60°C (140°F)	13.6 – 18.4 kΩ 2.2 – 2.7 kΩ 0.5 – 0.7 kΩ
Throttle body	Throttle valve fully closed angle Throttle opener setting speed		6° 900 – 1,950 rpm
Throttle position sensor	Resistance (VC – E2)	at 20°C (68°F)	1.3 – 3.2 kΩ
Throttle control motor	Motor resistance (M+ – M–) Clutch resistance (CL+ – CL–)	at 20°C (68°F) at 20°C (68°F)	0.3 – 100 Ω 4.2 – 5.2 Ω
Accelerator pedal position sensor	Resistance (VC – E2)	at 20°C (68°F)	1.2 – 3.2 kΩ
VSV for EVAP	Resistance	at 20°C (68°F)	26 – 30 Ω
VSV for CCV	Resistance	at 20°C (68°F) at 100°C (212°F)	25 – 30 Ω 32 – 42 Ω
ECT sensor	Resistance	at –20°C (–4°F) at 0°C (32°F) at 20°C (68°F) at 40°C (104°F) at 60°C (140°F) at 80°C (176°F)	10 – 20 kΩ 4 – 7 kΩ 2 – 3 kΩ 0.9 – 1.3 kΩ 0.4 – 0.7 kΩ 0.2 – 0.4 kΩ
Vapor pressure sensor	Power source voltage (VC – E2)		4.5 – 5.5 V
A/F sensor	Heater resistance	at 20°C (68°F) at 800°C (1,472°F)	0.8 – 1.4 Ω 1.8 – 3.2 Ω
Heated oxygen sensor	Heater resistance	at 20°C (68°F) at 800°C (1,472°F)	11 – 16 Ω 23 – 32 Ω
Fuel cut rpm	Fuel return rpm	M/T A/T	1,000 rpm 1,200 rpm

SS00V–13

TORQUE SPECIFICATION

Part tightened	N·m	kgf·cm	ft·lbf
Fuel line (Union bolt type)	34.3	350	25
Fuel line (Flare nut type) use with SST	28	285	21
Fuel inlet pipe x Intake manifold	8	80	71 in.·lbf
Fuel pressure regulator x LH delivery pipe	8	80	71 in.·lbf
Delivery pipe x Intake manifold	13	130	10
Fuel pump suction plate x Fuel tank	3.5	35	31 in.·lbf
Fuel pipe x Body	20	200	14
Fuel tank band x Body	62	632	45
Throttle body x Air intake chamber	18	180	13
ECT sensor x Intake manifold	19.6	200	14
Knock sensor x Cylinder block	39	400	29
Heated oxygen sensor x Center exhaust pipe	20	200	14
A/F sensor x Front exhaust pipe	20	200	14

SFI (2UZ–FE)

SS0CB–18

SERVICE DATA

Fuel pressure regulator	Fuel pressure	at no vacuum	265 – 304 kPa (2.7 – 3.1 kgf/cm^2, 38 – 44 psi)
Fuel pump	Resistance	at 20°C (68°F)	0.2 – 3.0 Ω
Injector	Resistance Injection volume Difference between each cylinder Fuel leakage	at 20°C (68°F)	13.4 – 14.2 Ω 56 – 69 cm^3 (3.4 – 4.2 cu in.) per 15 sec. 13 cm^3 (0.8 cu in.) or less 1 drop or less per 12 min.
MAF meter	Resistance (THA – E2)	at –20°C (–4°F) at 20°C (68°F) at 60°C (140°F)	12.5 – 16.9 kΩ 2.19 – 2.67 kΩ 0.50 – 0.68 kΩ
Throttle body	Throttle body fully closed angle		4°
Throttle control motor	Motor resistance	at 20°C (68°F)	0.3 – 100 Ω
Fuel pump resister		at 20°C (68 °F)	0.70 – 0.76 kΩ
VSV for EVAP	Resistance	at 20°C (68°F)	26 – 30 Ω
VSV for CCV	Resistance	at 20°C (68°F) at 100°C (212°F)	26 – 30 Ω 32 – 42 Ω
ECT sensor	Resistance	at –20°C (–4°F) 0°C (32°F) 20°C (68°F) 40°C (104°F) 60°C (140°F) 80°C (176°F)	10 – 20 kΩ 4 – 7 kΩ 2 – 3 kΩ 0.9 – 1.3 kΩ 0.4 – 0.7 kΩ 0.2 – 0.4 kΩ
Vapor pressure sensor	Power source voltage		4.5 – 5.5 V
Heated oxygen sensor	Heater coil resistance	at 20°C (68°F) at 800°C (1,472°F)	11 – 16 Ω 23 – 32 Ω
Accelerator pedal position sensor	Standard throttle valve opening percentage Sensor lever full–open position		 60 % or more
Fuel cut rpm	Fuel return rpm		1,000 rpm

SS0CC–17

TORQUE SPECIFICATION

Part tightened		N·m	kgf·cm	ft·lbf
Fuel line Flare nut type	for use with SST	28 34.3	285 350	21 25
Fuel pressure pulsation damper x Delivery pipe	for use with SST	33 39	340 400	24 29
Fuel pressure regulator x RH delivery pipe		7.5	80	66 in.·lbf
Fuel pump suction plate x Fuel tank		3.5	35	31 in.·lbf
Front fuel pipe x Delivery pipe		39	400	29
Front fuel pipe x Lower intake manifold		7.5	80	66 in.·lbf
Fuel return pipe x LH delivery pipe		7.5	80	66 in.·lbf
Delivery pipe x Lower intake manifold		18	185	13
Fuel tank band x Body		62	632	45
Water bypass pipe x Throttle body		5.4	55	48 in.·lbf
Throttle body x Upper intake manifold, Lower intake manifold		18	185	13
ECT sensor x Front water bypass joint		19.6	200	14
Knock sensor x Cylinder block		45	450	33
Heated oxygen sensor x Exhaust manifold		44	450	32
Heated oxygen sensor x Front exhaust pipe		20	200	14
Fuel pump resister x Body		8	82	71 in.·lbf
Accelerator pedal x Body		5.0	51	44 in.·lbf

COOLING (5VZ–FE)

SS00Y–02

SERVICE DATA

Thermostat	Valve opening temperature		80 – 84˚C (176 – 183˚F)
	Valve lift	at 95˚C (203˚F)	8.5 mm (0.335 in.) or more
Radiator cap	Relief valve opening pressure	Standard	74 – 103 kPa (0.75 – 1.05 kgf/cm^2, 10.7 – 14.9 psi)
		Minimum	59 kPa (0.6 kgf/cm^2, 8.6 psi)

SS00Z–03

TORQUE SPECIFICATION

Part tightened	N·m	kgf·cm	ft·lbf
Drain plug x Cylinder block	30	300	22
Fan x Fluid coupling	5.5	55	47 in.·lbf
Water pump x Cylinder block	20	200	14
Oil dipstick guide x Generator bracket	8	80	70 in.·lbf
Water inlet x Water pump	20	200	14
Oil cooler x Lower tank	8.3	85	74 in.·lbf
Inlet pipe x Lower tank	15	150	11
Radiator support x Radiator	12.7	130	9
No.1 fan shroud x Radiator	5	50	44 in.·lbf
Radiador mounting bolt	12	120	9

COOLING (2UZ–FE)

SS0O9–02

SERVICE DATA

Thermostat	Valve opening temperature		80 – 84˚C (176 – 183˚F)
	Valve lift	at 95˚C (203˚F)	10 mm (0.39 in.) or more
Radiator cap	Relief valve opening pressure	Standard	74 – 103 kPa (0.75 – 1.05 kgf/cm^2, 10.7 – 14.9 psi)
		Minimum	59 kPa (0.6 kgf/cm^2, 8.6 psi)

SS0OA–02

TORQUE SPECIFICATION

Part tightened		N·m	kgf·cm	ft·lbf
Drain plug x Union on cylinder block		12.7	130	9
Fan x Fluid coupling		5.5	55	47 in.·lbf
Water pump x Cylinder block	Bolt	21	215	15
	Stud bolt and nut	18	185	13
Water inlet housing x Water pump		18	185	13
Water inlet x Water inlet housing		19	195	14
Radiator x Radiator support		12.7	130	9
No.1 fan shroud x Radiator		5	50	44 in.·lbf
Radiator mounting bolt		12	120	9

LUBRICATION (5VZ–FE)

SS012–03

SERVICE DATA

Oil pressure		At idle speed	29 kPa (0.3 kgf/cm^2, 4.3 psi) or more
		At 3,000 rpm	245 – 520 kPa (2.5 – 5.3 kgf/cm^2, 36 – 75 psi)
Oil pump	Body clearance	Standard	0.10 – 0.18 mm (0.0039 – 0.0069 in.)
		Maximum	0.30 mm (0.0118 in.)
	Tip clearance	Standard	0.11 – 0.24 mm (0.0043 – 0.0094 in.)
		Maximum	0.35 mm (0.0138 in.)
	Side clearance	Standard	0.03 – 0.09 mm (0.0012 – 0.0035 in.)
		Maximum	0.15 mm (0.0059 in.)

SS013–03

TORQUE SPECIFICATION

Part tightened		N·m	kgf·cm	ft·lbf
Oil pressure switch x Cylinder block		15	150	11
Oil drain plug x Oil pan		37.5	383	28
Oil pump x Oil pump body cover		10	105	8
Oil pump x Cylinder block	14 mm head	20	200	15
	12 mm head	42	420	31
Oil pan baffle plate x Cylinder block		7.5	75	66 in.·lbf
Oil strainer x Cylinder block, Oil pump		7.5	75	66 in.·lbf
Oil pan x Cylinder block, Oil pump		7.6	78	67 in.·lbf
Oil dipstick guide x Generator bracket		8	80	70 in.·lbf
Oil cooler x Cylinder block		60	612	44

LUBRICATION (2UZ–FE)

SS0OB–02

SERVICE DATA

Oil pressure		at idle speed	29 kPa (0.3 kgf/cm^2, 4.3 psi) or more
		at 3,000 rpm	294 – 588 kPa (3.0 – 6.0 kgf/cm^2, 43 – 85 psi)
Oil pump	Tip clearance	Standard	0.110 – 0.240 mm (0.0043 – 0.0094 in.)
		Maximum	0.35 mm (0.0138 in.)
	Side clearance	Standard	0.030 – 0.090 mm (0.0012 – 0.0035 in.)
		Maximum	0.15 mm (0.0059 in.)
	Body clearance	Standard	0.100 – 0.175 mm (0.0039 – 0.0069 in.)
		Maximum	0.30 mm (0.0118 in.)

SS0OC–03

TORQUE SPECIFICATION

Part tightened		N·m	kgf·cm	ft·lbf
No.2 oil pan x Drain plug		39	400	29
Oil pump body cover x Oil pump body		10	105	8
Oil pump x Cylinder block	14 mm head	30.5	310	22
	Others	15.5	160	11
Oil strainer x Cylinder block, Oil pump		7.5	80	66 in.·lbf
No.1 oil pan x Oil pump, Oil seal retainer, Cylinder block	10 mm head	7.5	80	66 in.·lbf
	12 mm head	28	290	21
Oil pan baffle plate x No.1 oil pan		7.5	80	66 in.·lbf
No.2 oil pan x No.1 oil pan		7.5	80	66 in.·lbf
Oil filter bracket x Oil pump		18	185	13
Oil dipstick guide x Cylinder head		15	153	11
Oil cooler x Oil filter bracket		68.6	700	51

IGNITION (5VZ–FE)

SS016–03

SERVICE DATA

High–tension cord	Resistance	Maximum	25 kΩ per cord
Spark plug	Recommended spark plug	DENSO made	K16TR11
		NGK made	BKR5EKB–11
	Correct electrode gap		1.1 mm (0.043 in.)
Ignition coil	Resistance	Primary at cold	0.67 – 1.05 Ω
		at hot	0.85 – 1.23 Ω
		Secondary at cold	9.3 –16.0 kΩ
		at hot	11.7 – 18.8 kΩ
Camshaft position sensor	Resistance	at cold	835 – 1,400 Ω
		at hot	1,060 – 1,645 Ω
Crankshaft position sensor	Resistance	at cold	1,630 – 2,740 Ω
		at hot	2,065 – 3,225 Ω

SS017–03

TORQUE SPECIFICATION

Part tightened	N·m	kgf·cm	ft·lbf
Spark plug x Cylinder head	20	200	14
Ignition coil x Cylinder head	8	80	70 in.·lbf
Camshaft position sensor x Cylinder head	8	80	70 in.·lbf
Crankshaft position sensor x Oil pump	8	80	70 in.·lbf

IGNITION (2UZ–FE)

SS0O6–04

SERVICE DATA

Firing order	–		1 – 8 – 4 – 3 – 6 – 5 – 7 – 2
Spark plug	Recommended spark plug	DENSO made	K20R–U
		NGK made	BKR6EYA
	Electrode gap		0.8 mm (0.031 in.)
Camshaft position sensor	Resistance	Cold	835 – 1,400 Ω
		Hot	1,060 – 1,645 Ω
Crankshaft position sensor	Resistance	Cold	1,630 – 2,740 Ω
		Hot	2,065 – 3,225 Ω

SS0O7–03

TORQUE SPECIFICATION

Part tightened	N·m	kgf·cm	ft·lbf
Spark plug x Cylinder head	17.5	180	13
Ignition coil (with igniter) x Cylinder head cover	7.5	80	66 in.·lbf
Camshaft position sensor x LH cylinder head	7.5	80	66 in.·lbf
Crankshaft position sensor x Oil pump	6.5	65	58 in.·lbf

STARTING (5VZ–FE)

SS01A–06

SERVICE DATA

Starter (1.2 kW type)	Rated voltage and output power		12 V 1.2 kW
	No–load characteristics	Current	90 A or less at 11.5 V
		rpm	3,000 rpm or more
	Brush length	Standard	15.5 mm (0.610 in.)
		Minimum	10.0 mm (0.394 in.)
	Spring installed load	Standard	13.7 – 19.6 N (1.40 – 2.00 kgf, 3.1 – 4.4 lbf)
		Minimum	9.8 N (1.00 kgf, 2.2 lbf)
	Commutator		
	Diameter	Standard	30 mm (1.18 in.)
		Minimum	29 mm (1.14 in.)
	Undercut depth	Standard	0.6 mm (0.024 in.)
		Minimum	0.2 mm (0.008 in.)
	Circle runout	Maximum	0.05 mm (0.0020 in.)
	Magnetic switch		
	Contact plate for wear	Maximum	0.9 mm (0.035 in.)
Starter (1.4 kW type)	Rated voltage and output power		12 V 1.4 kW
	No–load characteristics	Current	90 A or less at 11.5 V
		rpm	3,000 rpm or more
	Brush length	Standard	15.5 mm (0.610 in.)
		Minimum	10.0 mm (0.394 in.)
	Spring installed load	Standard	17.6 – 23.5 N (1.80 – 2.40 kgf, 4.0 – 5.3 lbf)
		Minimum	11.8 N (1.20 kgf, 2.6 lbf)
	Commutator		
	Diameter	Standard	30 mm (1.18 in.)
		Minimum	29 mm (1.14 in.)
	Undercut depth	Standard	0.6 mm (0.024 in.)
		Minimum	0.2 mm (0.008 in.)
	Circle runout	Maximum	0.05 mm (0.0020 in.)
	Magnetic switch		
	Contact plate for wear	Maximum	0.9 mm (0.035 in.)
Starter (1.8 kW type)	Rated voltage and output power		12 V 1.8 kW
	No–load characteristics	Current	100 A or less at 11.5 V
		rpm	2,500 rpm or more
	Shunt coil resistance	at 20°C (68°F)	1.5 – 1.9 Ω
	Brush length	Standard	15.0 mm (0.591 in.)
		Minimum	9.0 mm (0.354 in.)
	Spring installed load	Standard	21.5 – 27.5 N (2.20 – 2.80 kgf, 4.9 – 6.2 lbf)
		Minimum	12.7 N (1.30 kgf, 2.7 lbf)
	Commutator		
	Diameter	Standard	35 mm (1.38 in.)
		Minimum	34 mm (1.34 in.)
	Undercut depth	Standard	0.7 mm (0.028 in.)
		Minimum	0.2 mm (0.008 in.)
	Circle runout	Maximum	0.05 mm (0.0020 in.)
	Magnetic switch		
	Contact plate for wear	Maximum	0.9 mm (0.035 in.)

SS01B–06

TORQUE SPECIFICATION

Part tightened		N·m	kgf·cm	ft·lbf
End cover x Field frame	1.2 kW, 1.4 kW type	1.5	15	13 in.·lbf
	1.8 kW type	3.8	39	34 in.·lbf
Magnetic switch x Starter housing	1.2 kW, 1.4 kW type	5.9	60	52 in.·lbf
	1.8 kW type	9.3	95	82 in.·lbf
Field frame x Starter housing	1.2 kW, 1.4 kW type	5.9	60	52 in.·lbf
	1.8 kW type	9.3	95	82 in.·lbf
Lead wire x Terminal C of starter		5.9	60	52 in.·lbf
Terminal nut x Terminal C of starter, Terminal 30 of starter		17	170	13
Magnetic switch end cover x Magnetic switch	1.2 kW, 1.4 kW type	2.5	25	22 in.·lbf
	1.8 kW type	3.6	35	30 in.·lbf
Starter wire x Starer		8.8	90	78 in.·lbf
Starter x Transaxle		39	400	29

STARTING (2UZ–FE)

SS0OD–02

SERVICE DATA

Starter (1.4 kW type)	Rated voltage and output power		12 V 1.4 kW
	No–load characteristics	Current	90 A or less at 11.5 V
		rpm	3,000 rpm or more
	Brush length	Standard	15.5 mm (0.610 in.)
		Minimum	10.0 mm (0.394 in.)
	Spring installed load	Standard	17.6 – 23.5 N (1.8 – 2.4 kgf, 4.0 – 5.3 lbf)
		Minimum	11.8 N (1.20 kgf, 2.7 lbf)
	Commutator		
	Diameter	Standard	30.0 mm (1.181 in.)
		Minimum	29.0 mm (1.142 in.)
	Undercut depth	Standard	0.6 mm (0.024 in.)
		Minimum	0.2 mm (0.008 in.)
	Circle runout	Maximum	0.05 mm (0.0020 in.)
	Magnetic switch		
	Contact plate for wear	Maximum	0.9 mm (0.035 in.)
Starter (2.0 kW type)	Rated voltage and output power		12 V 2.0 kW
	No–load characteristics	Current	100 A or less at 11.5 V
		rpm	2,500 rpm or more
	Brush length	Standard	15.0 mm (0.591 in.)
		Minimum	9.0 mm (0.354 in.)
	Spring installed load	Standard	21.5 – 27.5 N (2.2 – 2.8 kgf, 4.8 – 6.2 lbf)
		Minimum	12.7 N (1.3 kgf, 2.9 lbf)
	Commutator		
	Diameter	Standard	35.0 mm (1.378 in.)
		Minimum	34.0 mm (1.339 in.)
	Undercut depth	Standard	0.7 mm (0.028 in.)
		Minimum	0.2 mm (0.008 in.)
	Circle runout	Maximum	0.05 mm (0.0020 in.)
	Field frame		
	Shunt coil resistance	at 20°C (68°F)	1.5 – 1.9 Ω
	Magnetic switch		
	Contact plate for wear	Maximum	0.9 mm (0.035 in.)

SS0OE–02

TORQUE SPECIFICATION

Part tightened		N·m	kgf·cm	ft·lbf
Terminal 30 nut, Terminal C nut x Terminal bolt		17	170	13
End cover x Magnetic switch housing	1.4 kW type	2.5	25	22 in.·lbf
	2.0 kW type	3.6	37	32 in.·lbf
End cover x Brush holder	1.4 kW type	1.5	15	13 in.·lbf
	2.0 kW type	3.8	39	34 in.·lbf
Starter hosing x Magnetic switch	1.4 kW type	5.9	60	52 in.·lbf
	2.0 kW type	9.3	95	82 in.·lbf
End cover with field frame x Magnetic switch	1.4 kW type	5.9	60	52 in.·lbf
	2.0 kW type	9.3	95	82 in.·lbf
Lead wire of field coil x Terminal C		5.9	60	52 in.·lbf
Wire clamp, Starter wire x Starter		9.81	100	84 in.·lbf
Starter x Cylinder block		39	400	29

CHARGING (5VZ–FE)

SS01A–08

SERVICE DATA

Battery	Exept maintenance–free		
	Specific gravity	at 20˚C (68˚F)	1.25 – 1.29
	Maintenance–free		
	Voltage	at 20˚C (68˚F)	12.5 – 12.9 V
Generator	Rated output		12V 80A
	Rotor coil resistance	at 20˚C (68˚F)	2.1 – 2.5 Ω
	Slip ring diameter	STD	14.2 – 14.4 mm (0.559 – 0.567 in.)
		Minimum	12.8 mm (0.504 in.)
	Brush exposed length	STD	9.5 – 11.5 mm (0.374 – 0.453 in.)
		Minimum	1.5 mm (0.059 in.)
Voltage regulator	Regulating voltage		13.2 – 14.8 V
Drive belt	Tension	New belt	160 ± 25 lbf
		Used belt	100 ± 20 lbf

SS01B–07

TORQUE SPECIFICATION

Part tightened		N·m	kgf·cm	ft·lbf
Bearing retainer x Drive end frame		3.0	31	27 in.·lbf
Rectifier end frame x Drive end frame		4.5	46	39 in.·lbf
Generator pulley x Rotor		110.5	1,125	81
Rectifier holder x Lead wire on rectifier end frame		2.94	30	26 in.·lbf
Voltage regulator x Rectifier end frame, Rectifier holder		1.96	20	17 in.·lbf
Brush holder x Rectifier holder, Voltage regulator		1.96	20	17 in.·lbf
Rear end cover x Rectifier holder		4.4	45	39 in.·lbf
Plate terminal x Rectifier holder (80 A type)	Bolt	3.85	39	34 in.·lbf
	Nut	4.4	45	39 in.·lbf
Terminal insulator x Rectifier holder		4.1	41.5	36 in.·lbf
Generator x Generator bracket		51	520	38
Generator x Adjusting lever		18.5	185	14

CHARGING (2UZ–FE)

SS0OF–03

SERVICE DATA

Battery	Exept maintenance–free Specific gravity	at 20˚C (68˚F)	1.25 – 1.29
	Maintenance–free Voltage	at 20˚C (68˚F)	12.5 – 12.9 V
Generator	Rated output		12V 100A
	Rotor coil resistance	at 20˚C (68˚F)	2.1 – 2.5 Ω
	Slip ring diameter	Standard	14.2 – 14.4 mm (0.559 – 0.567 in.)
		Minimum	12.8 mm (0.504 in.)
	Brush exposed length	Standard	10.5 mm (0.413 in.)
		Minimum	1.5 mm (0.059 in.)
Voltage regulator	Regulating voltage		13.2 – 14.8 V

SS0OG–03

TORQUE SPECIFICATION

Part tightened		N·m	kgf·cm	ft·lbf
Bearing retainer x Drive end frame		3.0	31	27 in.·lbf
Rectifier end frame x Drive end frame	without Cord clip	4.5	46	39 in.·lbf
	with Cord clip	5.4	55	48 in.·lbf
Generator pulley x Rotor		110.5	1,125	81
Rectifier holder x Lead wire on rectifier end frame		2.94	30	26 in.·lbf
Voltage regulator x Rectifier end frame, Rectifier holder		1.96	20	17 in.·lbf
Brush holder x Rectifier holder, Voltage regulator		1.96	20	17 in.·lbf
Rear end cover x Rectifier holder		4.4	45	39 in.·lbf
Plate terminal x Rectifier holder	Bolt	3.85	39	34 in.·lbf
	Nut	4.4	45	39 in.·lbf
Terminal insulator x Rectifier holder		4.1	42	36 in.·lbf
Generator x Cylinder block		39	400	29

CLUTCH

SS07T–02

SERVICE DATA

Pedal height from dash panel		160.1 – 170.1 mm (6.303 – 6.697 in.)
Pedal height from dash insulator		155.1 – 165.1 mm (6.106 – 6.500 in.)
Push rod play at pedal top		1.0 – 5.0 mm (0.039 – 0.197 in.)
Pedal freeplay		5.0 – 15.0 mm (0.197 – 0.591 in.)
Clutch release point from pedal full stroke end position		25 mm (0.98 in.) or more
Clutch start switch	ON–OFF Stroke	8 ± 0.5 mm (0.31 ± 0.020 in.)
Slotted spring pin protrusion		1.5 – 3.5 mm (0.059 – 0.138 in.)
Disc rivet head depth	Min.	0.3 mm (0.012 in.)
Disc runout	Max.	0.8 mm (0.031 in.)
Flywheel runout	Max.	0.1 mm (0.004 in.)
Diaphragm spring finger wear	Max. depth	0.6 mm (0.024 in.)
Diaphragm spring finger wear	Max. width	5.0 mm (0.197 in.)
Diaphragm spring tip non–alignment	Max.	0.5 mm (0.020 in.)

SS07U–02

TORQUE SPECIFICATION

Part tightened	N·m	kgf·cm	ft·lbf
Clutch line union	15	155	11
Master cylinder mounting nut	14	143	10
Bleeder plug x Release cylinder body	11	110	8
Clutch cover x Flywheel	19	195	14
Release cylinder installation bolt	12	120	9
Release fork support	47	480	35
Flywheel set bolt	85	850	63

MANUAL TRANSMISSION (R150, R150F)

SS07V–02

SERVICE DATA

Output shaft 1st gear journal diameter	Min.	38.860 mm (1.5299 in.)
Output shaft 2nd gear journal diameter	Min.	46.860 mm (1.8449 in.)
Output shaft 3rd gear journal diameter	Min.	37.860 mm (1.4905 in.)
Output shaft flange thickness	Min.	4.70 mm (0.1850 in.)
Output shaft runout	Max.	0.06 mm (0.0024 in.)
Gear thrust clearance 1st	STD	0.20 – 0.45 mm (0.008 – 0.0177 in.)
	Max.	0.50 mm (0.0197 in.)
Gear thrust clearance 2nd	STD	0.10 – 0.25 mm (0.0039 – 0.0098 in.)
	Max.	0.30 mm (0.0118 in.)
Gear thrust clearance 3rd	STD	0.10 – 0.25 mm (0.0039 – 0.0098 in.)
	Max.	0.30 mm (0.0118 in.)
Gear radial clearance 1st	STD	0.020 – 0.073 mm (0.0008 – 0.0029 in.)
	Max.	0.160 mm (0.0063 in.)
Gear radial clearance 2nd	STD	0.015 – 0.068 mm (0.0006 – 0.0027 in.)
	Max.	0.160 mm (0.0063 in.)
Gear radial clearance 3rd	STD	0.015 – 0.068 mm (0.0006 – 0.0027 in.)
	Max.	0.160 mm (0.0063 in.)
Shift fork to hub sleeve clearance	Max.	1.0 mm (0.039 in.)
Synchronizer ring to gear clearance	Min.	0.8 mm (0.031 in.)
Input shaft snap ring thickness		
	Mark A	2.10 – 2.15 mm (0.0827 – 0.0846 in.)
	Mark B	2.15 – 2.20 mm (0.0846 – 0.0866 in.)
	Mark C	2.20 – 2.25 mm (0.0866 – 0.0886 in.)
	Mark D	2.25 – 2.30 mm (0.0886 – 0.0906 in.)
	Mark E	2.30 – 2.35 mm (0.0906 – 0.0925 in.)
	Mark F	2.35 – 2.40 mm (0.0925 – 0.0945 in.)
	Mark G	2.40 – 2.45 mm (0.0945 – 0.0965 in.)
Output shaft snap ring thickness		
Clutch hub No.1	Mark A	2.30 – 2.35 mm (0.0906 – 0.0925 in.)
	Mark B	2.35 – 2.40 mm (0.0925 – 0.0945 in.)
	Mark C	2.40 – 2.45 mm (0.0945 – 0.0965 in.)
	Mark D	2.45 – 2.50 mm (0.0965 – 0.0984 in.)
	Mark E	2.50 – 2.55 mm (0.0984 – 0.1004 in.)
	Mark F	2.55 – 2.60 mm (0.1004 – 0.1024 in.)
	Mark G	2.60 – 2.65 mm (0.1024 – 0.1043 in.)
Output shaft snap ring thickness		
Clutch hub No.2	Mark A	1.80 – 1.85 mm (0.0709 – 0.0728 in.)
	Mark B	1.85 – 1.90 mm (0.0728 – 0.0748 in.)
	Mark C	1.90 – 1.95 mm (0.0748 – 0.0768 in.)
	Mark D	1.95 – 2.00 mm (0.0768 – 0.0787 in.)
	Mark E	2.00 – 2.05 mm (0.0787 – 0.0807 in.)
	Mark F	2.05 – 2.10 mm (0.0807 – 0.0827 in.)
	Mark G	2.10 – 2.15 mm (0.0827 – 0.0846 in.)

Output shaft snap ring thickness		
Rear	Mark A	2.65 – 2.70 mm (0.1043 – 0.1063 in.)
	Mark B	2.70 – 2.75 mm (0.1063 – 0.1083 in.)
	Mark C	2.75 – 2.80 mm (0.1083 – 0.1102 in.)
	Mark D	2.80 – 2.85 mm (0.1102 – 0.1122 in.)
	Mark E	2.85 – 2.90 mm (0.1122 – 0.1142 in.)
	Mark F	2.90 – 2.95 mm (0.1142 – 0.1161 in.)
	Mark G	2.95 – 3.00 mm (0.1161 – 0.1181 in.)
	Mark H	3.00 – 3.05 mm (0.1181 – 0.1201 in.)
	Mark J	3.05 – 3.10 mm (0.1201 – 0.1220 in.)
	Mark K	3.10 – 3.15 mm (0.1220 – 0.1240 in.)
	Mark L	3.15 – 3.20 mm (0.1240 – 0.1260 in.)
	Mark M	3.20 – 3.25 mm (0.1260 – 0.1280 in.)
	Mark N	3.25 – 3.30 mm (0.1280 – 0.1299 in.)
	Mark P	3.30 – 3.35 mm (0.1299 – 0.1319 in.)
	Mark Q	3.35 – 3.40 mm (0.1319 – 0.1339 in.)
	Mark R	3.40 – 3.45 mm (0.1339 – 0.1358 in.)
	Mark S	3.45 – 3.50 mm (0.1358 – 0.1378 in.)
Counter gear roller bearing journal diameter	Min.	27.860 mm (1.0968 in.)
Counter 5th gear thrust clearance	STD	0.10 – 0.35 mm (0.0039 – 0.0138 in.)
	Max.	0.40 mm (0.0157 in.)
Counter 5th radial clearance	STD	0.015 – 0.068 mm (0.0006 – 0.0027 in.)
	Max.	0.160 mm (0.0063 in.)
Reverse idler gear radial clearance	STD	0.040 – 0.082 mm (0.0016 – 0.0032 in.)
	Max.	0.130 mm (0.0051 in.)
Reverse idler gear to shift arm clearance	STD	0.05 – 0.35 mm (0.0020 – 0.0138 in.)
	Max.	0.50 mm (0.0197 in.)
Counter gear snap ring thickness		
Front	Mark A	2.00 – 2.05 mm (0.0787 – 0.0807 in.)
	Mark B	2.05 – 2.10 mm (0.0807 – 0.0827 in.)
	Mark C	2.10 – 2.15 mm (0.0827 – 0.0846 in.)
	Mark D	2.15 – 2.20 mm (0.0846 – 0.0866 in.)
	Mark E	2.20 – 2.25 mm (0.0866 – 0.0886 in.)
	Mark F	2.25 – 2.30 mm (0.0886 – 0.0906 in.)
Counter gear snap ring thickness		
Rear	Mark A	2.80 – 2.85 mm (0.1102 – 0.1122 in.)
	Mark B	2.85 – 2.90 mm (0.1122 – 0.1142 in.)
	Mark C	2.90 – 2.95 mm (0.1142 – 0.1161 in.)
	Mark D	2.95 – 3.00 mm (0.1161 – 0.1181 in.)
	Mark E	3.00 – 3.05 mm (0.1181 – 0.1201 in.)
	Mark F	3.05 – 3.10 mm (0.1201 – 0.1220 in.)
	Mark G	3.10 – 3.15 mm (0.1220 – 0.1240 in.)
Oil seal drive in depth		
Front bearing retainer (from retainer end)		11.7 ± 0.5 mm (0.461 ± 0.020 in.)
Extension housing		0 ± 0.5 mm (0 ± 0.020 in.)
Transfer adaptor		45.6 ± 0.5 mm (1.795 ± 0.020 in.)

SS07W–03

TORQUE SPECIFICATION

Part tightened	N·m	kgf·cm	ft·lbf
Transmission x Engine	72	730	53
Starter x Transmission	39	400	29
Engine rear mounting x Transmission	65	660	48
Rear end plate x Transmission	37	380	27
Clutch release cylinder x Transmission	12	120	9
Front exhaust pipe x Center exhaust pipe	48	490	35
Front exhaust pipe x Exhaust manifold	62	630	46
Crossmember x Engine rear mounting	18	180	13
Crossmember x Frame	72	734	53
Transmission x Transfer (4WD)	37	380	27
Reverse shift arm bracket set bolt	18	185	13
Rear bearing retainer x Intermediate plate	18	185	13
Shift fork x Shift fork shaft	20	200	14
Straight screw plug	19	190	14
Front bearing retainer x Transmission case	17	170	12
Transmission case x Transfer adaptor (4WD)	37	380	27
Transmission case x Extension housing (2WD)	37	380	27
Shift lever housing set bolt	38	390	28
Clutch housing x Transmission case	36	370	27
Oil receiver x Extension housing (2WD)	11	115	8
Back–up light switch	44	450	32
Restrict pin	37	380	27
Control shift lever retainer x Transfer adaptor (4WD)	18	185	13
Control shift lever retainer x Extension housing (2WD)	18	185	13
Filler and drain plug	37	380	27
Vehicle speed sensor x Extension housing	11	115	8
Propeller shaft x Rear differential (2WD)	74	750	54
Center support bearing x Body	40	410	30
Clutch release line x Transmission	12	120	9
Front propeller shaft x Front differential (4WD)	74	750	54
Front propeller shaft x Transfer (4WD)	74	750	54
Rear propeller shaft x Transfer (4WD)	74	750	54
Rear propeller shaft x Rear differential (4WD)	74	750	54

AUTOMATIC TRANSMISSION (A340E, A340F)

SS13H–03

SERVICE DATA

Line pressure (Wheel locked)		
(5VZ–FE)		
	Engine idling	
	D position	380 – 440 kPa (3.9 – 4.5 kgf/cm^2, 51 – 64 psi)
	R position	600 – 695 kPa (6.1 – 7.1 kgf/cm^2, 87 – 101 psi)
	at stall (Throttle valve fully opened)	
	D position	1,090 – 1,225 kPa (11.1 – 12.5 kgf/cm^2, 158 – 178 psi)
	R position	1,460 – 1,795 kPa (14.9 – 18.3 kgf/cm^2, 212 – 260 psi)
(2UZ–FE)		
	Engine idling	
	D position	480 – 540 kPa (4.9 – 5.5 kgf/cm^2, 70 – 78 psi)
	R position	695 – 795 kPa (7.1 – 8.1 kgf/cm^2, 101 – 115 psi)
	at stall (Throttle valve fully opened)	
	D position	1,360 – 1,500 kPa (13.9 – 15.3 kgf/cm^2, 197 – 218 psi)
	R position	1,735 – 2,070 kPa (17.7 – 21.1 kgf/cm^2, 252 – 300 psi)
Engine stall revolution (D and R positions)		2,250 ± 150 rpm
Time lag	N → D position	Less than 1.2 seconds
	N → R position	Less than 1.5 seconds
Engine idle speed (A/C OFF and N position)		700 ± 50 rpm
Speedometer driven gear oil seal drive in depth		25 mm (0.98 in.)
Drive plate runout	Max.	0.20 mm (0.0079 in.)
Torque converter runout	Max.	0.30 mm (0.0118 in.)
Torque converter installation distance	5VZ–FE	More than 17.95 mm (0.7067 in.)
	2UZ–FE	More than 17.1 mm (0.673 in.)
Lock–up point		
D position		
(5VZ–FE / A340E)		
(Throttle valve opening 5%)	Lock–up ON	71 – 78 km/h (44 – 49 mph)
	Lock–up OFF	64 – 71 km/h (40 – 44 mph)
(5VZ–FE / A340F)		
(Throttle valve opening 5%)	Lock–up ON	67 – 74 km/h (42 – 46 mph)
	Lock–up OFF	61 – 68 km/h (38 – 42 mph)
(2UZ–FE / A340E)		
(Throttle valve opening 5%)	Lock–up ON	67 – 74 km/h (42 – 46 mph)
	Lock–up OFF	60 – 67 km/h (37 – 42 mph)
(2UZ–FE / A340F)		
(Throttle valve opening 5%)	Lock–up ON	67 – 74 km/h (42 – 46 mph)
	Lock–up OFF	60 – 67 km/h (37 – 42 mph)

Shift point		
(5VZ–FE / A340E)		
D position		
(Throttle valve fully opened)	1 → 2	59 – 65 km/h (37 – 40 mph)
	2 → 3	108 – 116 km/h (67 – 72 mph)
	3 → O/D	143 – 156 km/h (89 – 97 mph)
	O/D → 3	136 – 149 km/h (85 – 93 mph)
	3 → 2	99 – 111 km/h (62 – 69 mph)
	2 → 1	47 – 57 km/h (29 – 35 mph)
(Throttle valve fully closed)	3 → O/D	41 – 47 km/h (25 – 29 mph)
	O/D → 3	34 – 40 km/h (21 – 25 mph)
2 position		
(Throttle valve fully opened)	1 → 2	59 – 65 km/h (37 – 24 mph)
	3 → 2	113 – 125 km/h (70 – 78 mph)
	2 → 1	47 – 53 km/h (29 – 33 mph)
L position		
(Throttle valve fully opened)	3 → 2	96 – 107 km/h (60 – 66 mph)
	2 → 1	54 – 61 km/h (34 – 38 mph)
(5VZ–FE / A340F)		
D position		
(Throttle valve fully opened)	1 → 2	56 – 62 km/h (35 – 39 mph)
	2 → 3	102 – 110 km/h (63 – 68 mph)
	3 → O/D	136 – 148 km/h (85 – 92 mph)
	O/D → 3	129 – 141 km/h (80 – 88 mph)
	3 → 2	94 – 105 km/h (58 – 65 mph)
	2 → 1	45 – 50 km/h (28 – 31 mph)
(Throttle valve fully closed)	3 → O/D	39 – 45 km/h (24 – 28 mph)
	O/D → 3	33 – 38 km/h (21 – 24 mph)
2 position		
(Throttle valve fully opened)	1 → 2	56 – 62 km/h (35 – 39 mph)
	3 → 2	107 – 118 km/h (66 – 73 mph)
	2 → 1	45 – 50 km/h (28 – 31 mph)
L position		
(Throttle valve fully opened)	3 → 2	91 – 102 km/h (57 – 63 mph)
	2 → 1	52 – 58 km/h (32 – 36 mph)
(2UZ–FE / A340E)		
D position		
(Throttle valve fully opened)	1 → 2	60 – 67 km/h (37 – 42 mph)
	2 → 3	107 – 119 km/h (62 – 74 mph)
	3 → O/D	163 – 177 km/h (101 – 110 mph)
	O/D → 3	156 – 169 km/h (97 – 105 mph)
	3 → 2	100 – 108 km/h (62 – 67 mph)
	2 → 1	48 – 54 km/h (30 – 34 mph)
(Throttle valve fully closed)	3 → O/D	43 – 49 km/h (27 – 30 mph)
	O/D → 3	39 – 45 km/h (24 – 28 mph)
2 position		
(Throttle valve fully opened)	1 → 2	60 – 67 km/h (37 – 42 mph)
	3 → 2	118 – 130 km/h (73 – 81 mph)
	2 → 1	48 – 54 km/h (30 – 34 mph)
L position		
(Throttle valve fully opened)	3 → 2	100 – 112 km/h (62 – 70 mph)
	2 → 1	57 – 63 km/h (35 – 39 mph)

(2UZ–FE / A340F)		
D position		
(Throttle valve fully opened)	1 → 2	60 – 67 km/h (37 – 42 mph)
	2 → 3	107 – 119 km/h (62 – 74 mph)
	3 → O/D	163 – 177 km/h (101 – 110 mph)
	O/D → 3	156 – 169 km/h (97 – 105 mph)
	3 → 2	100 – 108 km/h (62 – 67 mph)
	2 → 1	48 – 55 km/h (30 – 34 mph)
(Throttle valve fully closed)	3 → O/D	43 – 49 km/h (27 – 30 mph)
	O/D → 3	39 – 45 km/h (24 – 28 mph)
2 position		
(Throttle valve fully opened)	1 → 2	60 – 67 km/h (37 – 42 mph)
	3 → 2	118 – 130 km/h (73 – 81 mph)
	2 → 1	48 – 54 km/h (30 – 34 mph)
L position		
(Throttle valve fully opened)	3 → 2	100 – 112 km/h (62 – 70 mph)
	2 → 1	57 – 63 km/h (35 – 39 mph)

SS13I–03

TORQUE SPECIFICATION

Part tightened		N·m	kgf·cm	ft·lbf
Extension housing x Transmission case	(A340E)	36	370	27
No.1 vehicle speed sensor		16	160	12
No.2 vehicle speed sensor		5.4	55	48 in.·lbf
O/D direct clutch speed sensor		5.4	55	48 in.·lbf
ATF temperature sensor x Transmission		15	150	11
Park/neutral position switch	(Bolt)	13	130	9
Park/neutral position switch	(Nut)	3.9	40	35 in.·lbf
Detent spring		10	100	7
Solenoid valve installation bolt		10	100	7
Valve body x Transmission case		11	110	8
Oil strainer x Valve bod		10	100	7
Oil pan		7.4	75	65 in.·lbf
Drain plug		20	205	15
Parking lock pawl bracket x Transmission case		7.4	75	65 in.·lbf
Oil cooler x Body		11	115	8
Transmission oil cooler bracket x Oil cooler		4.9	50	43 in.·lbf
Oil cooler tube clamp x Body		5.0	50	48 in.·lbf
Shift lever x Shift lever housing		18	180	13
Shift lever housing x Steering column assemby		12	120	9
Parking lock cable No. 1 x Shift lever housing		2.9	29	25 in.·lbf
Parking lock cable No. 2 x Column upper brackt		2.2	23	19 in.·lbf
Parking lock cable housing x Steering column assembly		10.5	110	8
Transmission x Engine		71	730	53
Starter x Transmission		39	400	29
Extension housing x Engine rear mounting insulator		65	660	48
Frame x Crossmember		72	734	53
Engine rear mounting insulator x Crossmember		18	185	13
Torque converter clutch x Drive plate		41	420	30
Rear end plate x Transmission		18	185	13
Oil cooler pipe		34	350	25
Shift control cable bracket x Transmission	(2UZ–FE)	18	185	13
Shift control cable x Transmission		12.5	130	9
Propeller shaft x Rear differential	(A340E)	74	750	54
Front propeller shaft x Front differential	(A340F)	74	750	54
Front propeller shaft x Transfer	(A340F)	74	750	54
Rear propeller shaft x Transfer	(A340F)	74	750	54
Rear propeller shaft x Rear differential	(A340F)	74	750	54
Center support bearing x Body		40	410	30
Front exhaust pipe x Exhaust manifold		62	630	46
Center exhaust pipe x Tail pipe		32	326	24
No.2 exhaust front pipe x Center exhaust pipe	(2UZ–FE)	48	490	35
Exhaust pipe support bracket x Transmission	(5VZ–FE)	44	450	33
Exhaust pipe support bracket x Exhaust pipe	(5VZ–FE)	44	450	33

Part tightened	N·m	kgf·cm	ft·lbf
Oil filler pipe x Transmission	12	120	9

TRANSFER (VF2A)

SS086–05

SERVICE DATA

Transfer unit		
Hose installation depth		13 mm (0.51 in.) or more
Oil pump body		
Body clearance	STD	0.09 – 0.16 mm (0.0035 – 0.0063 in.)
	Max.	0.16 mm (0.0063 in.)
Tip clearance	STD	0.05 – 0.15 mm (0.0020 – 0.0059 in.)
	Max.	0.15 mm (0.0059 in.)
Side clearance	STD	0.03 – 0.10 mm (0.0012 – 0.0039 in.)
	Max.	0.10 mm (0.0039 in.)
Rear output shaft		
Drive sprocket thrust clearance	STD	0.10 – 0.25 mm (0.0039 – 0.0098 in.)
	Max.	0.25 mm (0.0098 in.)
Rear output shaft journal outer diameter		
(part A)	Min.	27.98 mm (1.1016 in.)
(part B)	Min.	36.98 mm (1.4561 in.)
Drive sprocket radial clearance	STD	0.010 – 0.055 mm (0.0004 – 0.0022 in.)
	Max.	0.055 mm (0.0022 in.)
Front drive shift fork to clutch sleeve clearance	Max.	1.0 mm (0.039 in.)
High and low shift fork to clutch sleeve clearance	Max.	1.0 mm (0.039 in.)
Rear output shaft snap ring thickness	Mark	
	A	2.10 – 2.15 mm (0.0827 – 0.0846 in.)
	B	2.15 – 2.20 mm (0.0846 – 0.0866 in.)
	C	2.20 – 2.25 mm (0.0866 – 0.0886 in.)
	D	2.25 – 2.30 mm (0.0886 – 0.0906 in.)
	E	2.30 – 2.35 mm (0.0906 – 0.0925 in.)
	F	2.35 – 2.40 mm (0.0925 – 0.0945 in.)
	G	2.40 – 2.45 mm (0.0945 – 0.0965 in.)
	H	2.45 – 2.50 mm (0.0965 – 0.0984 in.)
	J	2.50 – 2.55 mm (0.0984 – 0.1004 in.)
	K	2.00 – 2.05 mm (0.0787 – 0.0807 in.)
	L	2.05 – 2.10 mm (0.0807 – 0.0827 in.)

Input shaft		
Input shaft journal outer diameter	Min.	47.59 mm (1.8736 in.)
Input shaft bushing diameter	Max.	39.14 mm (1.5409 in.)
Synchronizer ring to sprocket clearance	STD	1.05 – 1.85 mm (0.0413 – 0.0728 in.)
	Min.	0.80 mm (0.0315 in.)
Input shaft snap ring thickness	Mark	
	A	2.10 – 2.15 mm (0.0827 – 0.0846 in.)
	B	2.15 – 2.20 mm (0.0846 – 0.0866 in.)
	C	2.20 – 2.25 mm (0.0866 – 0.0886 in.)
	D	2.25 – 2.30 mm (0.0886 – 0.0906 in.)
	E	2.30 – 2.35 mm (0.0906 – 0.0925 in.)
	F	2.35 – 2.40 mm (0.0925 – 0.0945 in.)
	G	2.40 – 2.45 mm (0.0945 – 0.0965 in.)
	H	2.45 – 2.50 mm (0.0965 – 0.0984 in.)
	J	2.50 – 2.55 mm (0.0984 – 0.1004 in.)
	K	2.55 – 2.60 mm (0.1004 – 0.1024 in.)
	L	2.60 – 2.65 mm (0.1024 – 0.1043 in.)
	M	2.65 – 2.70 mm (0.1043 – 0.1063 in.)
	N	2.70 – 2.75 mm (0.1063 – 0.1083 in.)
	P	2.75 – 2.80 mm (0.1083 – 0.1102 in.)
	Q	2.80 – 2.85 mm (0.1102 – 0.1122 in.)
	R	2.85 – 2.90 mm (0.1122 – 0.1142 in.)
	S	2.90 – 2.95 mm (0.1142 – 0.1161 in.)
	T	2.95 – 3.00 mm (0.1161 – 0.1181 in.)
	U	3.00 – 3.05 mm (0.1181 – 0.1201 in.)
Planetary gear		
Pinion gear thrust clearance	STD	0.11 – 0.84 mm (0.0043 – 0.0331 in.)
	Max.	0.84 mm (0.0331 in.)
Pinion gear radial clearance	STD	0.009 – 0.038 mm (0.0004 – 0.0015 in.)
	Max.	0.038 mm (0.0015 in.)
Outer bearing snap ring thickness	Mark	
	1	1.45 – 1.50 mm (0.0571 – 0.0591 in.)
	2	1.50 – 1.55 mm (0.0591 – 0.0610 in.)
	3	1.55 – 1.60 mm (0.0610 – 0.0630 in.)
	4	1.60 – 1.65 mm (0.0630 – 0.0650 in.)
	5	1.65 – 1.70 mm (0.0650 – 0.0669 in.)
Inner bearing press in depth		7.7 – 8.3 mm (0.303 – 0.327 in.)
Oil seal		
Shift fork shaft oil seal drive in depth		–0.5 – 0.5 mm (–0.020 – 0.020 in.)

SS087–05

TORQUE SPECIFICATION

Part tightened	N·m	kgf·cm	ft·lbf
TRANSFER UNIT			
Transfer x Transfer adaptor	24	240	17
Engine rear mounting x Transfer adaptor	65	650	48
Crossmember x Frame	72	740	53
Engine rear mounting x Crossmember	18	185	13
Dynamic damper x Transfer	38	380	28
TRANSFER ASSEMBLY			
Vehicle speed sensor assembly set bolt	11	115	8
Transfer L4 position switch M/T (w/ diff. lock, or/and ABS) and A/T	37	380	27
Transfer 4WD position switch	37	380	27
Transfer neutral position switch A/T	37	380	27
Plug	37	380	27
Protector x Front case	18	185	13
Front bearing retainer x Front case	11	115	8
Control retainer x Front case M/T	18	185	13
Upper cover x Front case A/T	18	185	13
Front and rear companion flange lock nut	118	1,200	87
Extension housing x Rear case	12	120	9
Front case x Rear case	28	285	21
Straight screw plug for shift fork shaft	19	190	14
Separator with oil strainer x Front case	7.5	80	69 in.·lbf
Oil pump body x Front case	7.5	80	69 in.·lbf
Head screw plug for ring gear	19	190	14
OIL PUMP BODY			
Relief valve x Oil pump body	29	300	22
Oil pump plate x Oil pump body	7.4	75	65 in.·lbf

TRANSFER (VF2BM)

SS086–06

SERVICE DATA

Transfer unit		
Hose installation depth		13 mm (0.51 in.) or more
Oil pump body		
Body clearance	STD	0.09 – 0.16 mm (0.0035 – 0.0063 in.)
	Max.	0.16 mm (0.0063 in.)
Tip clearance	STD	0.05 – 0.15 mm (0.0020 – 0.0059 in.)
	Max.	0.15 mm (0.0059 in.)
Side clearance	STD	0.03 – 0.10 mm (0.0012 – 0.0039 in.)
	Max.	0.10 mm (0.0039 in.)
Rear output shaft		
Drive sprocket thrust clearance	STD	0.10 – 0.25 mm (0.0039 – 0.0098 in.)
	Max.	0.25 mm (0.0098 in.)
Rear output shaft journal outer diameter		
(part A)	Min.	27.98 mm (1.1016 in.)
(part B)	Min.	36.98 mm (1.4561 in.)
Drive sprocket radial clearance	STD	0.010 – 0.055 mm (0.0004 – 0.0022 in.)
	Max.	0.055 mm (0.0022 in.)
Front drive shift fork to clutch sleeve clearance	Max.	1.0 mm (0.039 in.)
High and low shift fork to clutch sleeve clearance	Max.	1.0 mm (0.039 in.)
Rear output shaft snap ring thickness	Mark	
	A	2.10 – 2.15 mm (0.0827 – 0.0846 in.)
	B	2.15 – 2.20 mm (0.0846 – 0.0866 in.)
	C	2.20 – 2.25 mm (0.0866 – 0.0886 in.)
	D	2.25 – 2.30 mm (0.0886 – 0.0906 in.)
	E	2.30 – 2.35 mm (0.0906 – 0.0925 in.)
	F	2.35 – 2.40 mm (0.0925 – 0.0945 in.)
	G	2.40 – 2.45 mm (0.0945 – 0.0965 in.)
	H	2.45 – 2.50 mm (0.0965 – 0.0984 in.)
	J	2.50 – 2.55 mm (0.0984 – 0.1004 in.)
	K	2.00 – 2.05 mm (0.0787 – 0.0807 in.)
	L	2.05 – 2.10 mm (0.0807 – 0.0827 in.)

Input shaft		
Input shaft journal outer diameter	Min.	47.59 mm (1.8736 in.)
Input shaft bushing diameter	Max.	39.14 mm (1.5409 in.)
Input shaft snap ring thickness	Mark	
	A	2.10 – 2.15 mm (0.0827 – 0.0846 in.)
	B	2.15 – 2.20 mm (0.0846 – 0.0866 in.)
	C	2.20 – 2.25 mm (0.0866 – 0.0886 in.)
	D	2.25 – 2.30 mm (0.0886 – 0.0906 in.)
	E	2.30 – 2.35 mm (0.0906 – 0.0925 in.)
	F	2.35 – 2.40 mm (0.0925 – 0.0945 in.)
	G	2.40 – 2.45 mm (0.0945 – 0.0965 in.)
	H	2.45 – 2.50 mm (0.0965 – 0.0984 in.)
	J	2.50 – 2.55 mm (0.0984 – 0.1004 in.)
	K	2.55 – 2.60 mm (0.1004 – 0.1024 in.)
	L	2.60 – 2.65 mm (0.1024 – 0.1043 in.)
	M	2.65 – 2.70 mm (0.1043 – 0.1063 in.)
	N	2.70 – 2.75 mm (0.1063 – 0.1083 in.)
	P	2.75 – 2.80 mm (0.1083 – 0.1102 in.)
	Q	2.80 – 2.85 mm (0.1102 – 0.1122 in.)
	R	2.85 – 2.90 mm (0.1122 – 0.1142 in.)
	S	2.90 – 2.95 mm (0.1142 – 0.1161 in.)
	T	2.95 – 3.00 mm (0.1161 – 0.1181 in.)
	U	3.00 – 3.05 mm (0.1181 – 0.1201 in.)
Planetary gear		
Pinion gear thrust clearance	STD	0.11 – 0.84 mm (0.0043 – 0.0331 in.)
	Max.	0.84 mm (0.0331 in.)
Pinion gear radial clearance	STD	0.009 – 0.038 mm (0.0004 – 0.0015 in.)
	Max.	0.038 mm (0.0015 in.)
Outer bearing snap ring thickness	Mark	
	1	1.45 – 1.50 mm (0.0571 – 0.0591 in.)
	2	1.50 – 1.55 mm (0.0591 – 0.0610 in.)
	3	1.55 – 1.60 mm (0.0610 – 0.0630 in.)
	4	1.60 – 1.65 mm (0.0630 – 0.0650 in.)
	5	1.65 – 1.70 mm (0.0650 – 0.0669 in.)
Inner bearing press in depth		7.7 – 8.3 mm (0.303 – 0.327 in.)

SS087–06

TORQUE SPECIFICATION

Part tightened	N·m	kgf·cm	ft·lbf
TRANSFER UNIT			
Transfer x Transfer adaptor	24	240	17
Engine rear mounting x Transfer adaptor	65	650	48
Crossmember x Frame	72	740	53
Engine rear mounting x Crossmember	18	185	13
TRANSFER ASSEMBLY			
Head screw plug for ring gear	19	190	14
Oil pump body x Front case	7.5	80	69 in.·lbf
Separator with oil strainer x Front case	7.5	80	69 in.·lbf
Transfer 4WD position switch	37	380	27
Transfer L4 position switch	37	380	27
Actuator assembly set bolt	20	200	14
Shift fork shaft stopper set bolt	19	190	14
Straight screw plug	19	190	14
Front case x Rear case	28	285	21
Extension housing x Rear case	12	120	9
Front and rear companion flange lock nut	118	1,200	87
Upper cover x Front case	18	185	13
Front bearing retainer x Front case	11	115	8
Protector x Front case	18	185	13
Plug	37	380	27
Vehicle speed sensor assembly set bolt	11	115	8
OIL PUMP BODY			
Relief valve x Oil pump body	29	300	22
Oil pump plate x Oil pump body	7.4	75	65 in.·lbf

PROPELLER SHAFT

SS07Y–02

SERVICE DATA

Propeller shaft runout		Maximum	0.8 mm (0.031 in.)
Spider bearing axial play		Maximum	
	4WD rear propeller shaft		0 mm (0 in.)
	2WD and 4WD front propeller shaft		0.05 mm (0.0020 in.)
4WD rear propeller shaft:			
Snap ring thickness	Color	Mark	
	–	⍰	2.44 – 2.46 mm (0.0961 – 0.0969 in.)
	–	10	2.46 – 2.48 mm (0.0969 – 0.0976 in.)
	–	1	2.28 – 2.30 mm (0.0898 – 0.0906 in.)
	–	2	2.30 – 2.32 mm (0.0906 – 0.0913 in.)
	–	None	2.32 – 2.34 mm (0.0913 – 0.0921 in.)
	Brown	–	2.34 – 2.36 mm (0.0921 – 0.0929 in.)
	Blue	–	2.36 – 2.38 mm (0.0929 – 0.0937 in.)
	–	6	2.38 – 2.40 mm (0.0937 – 0.0945 in.)
	–	7	2.40 – 2.42 mm (0.0945 – 0.0953 in.)
	–	8	2.42 – 2.44 mm (0.0953 – 0.0961 in.)
	–	D	2.18 – 2.20 mm (0.0858 – 0.0866 in.)
	–	E	2.20 – 2.22 mm (0.0866 – 0.0874 in.)
	–	F	2.22 – 2.24 mm (0.0874 – 0.0882 in.)
	–	G	2.24 – 2.26 mm (0.0882 – 0.0890 in.)
	–	H	2.26 – 2.28 mm (0.0890 – 0.0898 in.)
	–	A	2.48 – 2.50 mm (0.0976 – 0.0984 in.)
	–	B	2.50 – 2.52 mm (0.0984 – 0.0992 in.)
	–	C	2.52 – 2.54 mm (0.0992 – 0.1000 in.)
2WD and 4WD front propeller shaft:			
Snap ring thickness		Color	
		Blue	1.638 mm (0.0645 in.)
		Yellow	1.588 mm (0.0625 in.)
		Silver	1.537 mm (0.0605 in.)
		Copper	1.511 mm (0.0595 in.)
		Black	1.486 mm (0.0585 in.)
		Red	1.435 mm (0.0565 in.)
		Green	1.384 mm (0.0545 in.)

F14545

SS07Z–02

TORQUE SPECIFICATION

Part tightened		N·m	kgf·cm	ft·lbf
PROPELLER SHAFT ASSEMBLY (2WD)				
Intermediate shaft x Center support bearing x Center yoke	1st	181	1,845	133
	2nd	Loosen nut		
	3rd	82	835	60
Propeller shaft x Differential		74	750	54
Center support bearing x Body		40	410	30
PROPELLER SHAFT ASSEMBLY (4WD)				
Intermediate shaft x Center support bearing x Companion flange	1st	181	1,845	133
	2nd	Loosen nut		
	3rd	82	835	60
Intermediate shaft x Propeller shaft		74	750	54
Front propeller shaft x Front differential		74	750	54
Front propeller shaft x Transfer		74	750	54
Rear propeller shaft x Rear differential		74	750	54
Rear propeller shaft x Transfer		74	750	54
Center support bearing x Body		40	410	30

SUSPENSION AND AXLE

SS051–10

SERVICE DATA

Cold tire inflation pressure	Tire size: P245/70R16	Front	180 kPa (1.8 kgf/cm^2, 26 psi)
		Rear	240 kPa (2.4 kgf/cm^2, 35 psi)
	Tire size: P265/70R16	Front	180 kPa (1.8 kgf/cm^2, 26 psi)
		Rear	200 kPa (2.0 kgf/cm^2, 29 psi)
	Tire size: P265/65R17	Front	200 kPa (2.0 kgf/cm^2, 29 psi)
		Rear	220 kPa (2.2 kgf/cm^2, 32 psi)
Front wheel Alignment	◀ Vehicle height (2WD model for U.S.A.)		
	VCK30L–TRMDKA		
	Tire size: P245/70R16	Front: A*1 – B*2	64.3 mm (2.531 in.)
		Rear: C*3 – D*4	–51.5 mm (–2.028 in.)
	VCK30L–TRSDKA		
	Tire size: P245/70R16	Front: A*1 – B*2	67.0 mm (2.638 in.)
		Rear: C*3 – D*4	–50.9 mm (–2.004 in.)
	VCK30L–ARMSKA		
	Tire size: P245/70R16	Front: A*1 – B*2	54.8 mm (2.157 in.)
		Rear: C*3 – D*4	–51.4 mm (–2.024 in.)
	Tire size: P265/70R16	Front: A*1 – B*2	54.6 mm (2.150 in.)
		Rear: C*3 – D*4	–51.8 mm (–2.039 in.)
	VCK30L–ARSSKA		
	Tire size: P245/70R16	Front: A*1 – B*2	58.1 mm (2.287 in.)
		Rear: C*3 – D*4	–50.6 mm (–1.992 in.)
	Tire size: P265/70R16	Front: A*1 – B*2	57.9 mm (2.280 in.)
		Rear: C*3 – D*4	–51.0 mm (–2.007 in.)
	UCK30L–ARSSKA		
	Tire size: P245/70R16	Front: A*1 – B*2	68.7 mm (2.705 in.)
		Rear: C*3 – D*4	–38.7 mm (–1.748 in.)
	Tire size: P265/70R16	Front: A*1 – B*2	68.6 mm (2.700 in.)
		Rear: C*3 – D*4	–39.2 mm (–1.543 in.)
	Tire size: P265/65R17	Front: A*1 – B*2	68.2 mm (2.685 in.)
		Rear: C*3 – D*4	–40.1 mm (–1.579 in.)
	Tire size: P265/70R16*5	Front: A*1 – B*2	67.4 mm (2.654 in.)
		Rear: C*3 – D*4	–39.7 mm (–1.563 in.)
	Tire size: P265/65R17*6	Front: A*1 – B*2	73.3 mm (2.886 in.)
		Rear: C*3 – D*4	–56.4 mm (–2.220 in.)
	UCK30L–ARSLKA		
	Tire size: P265/70R16	Front: A*1 – B*2	66.3 mm (2.610 in.)
		Rear: C*3 – D*4	–44.4 mm (–1.748 in.)
	Tire size: P265/65R17	Front: A*1 – B*2	65.9 mm (2.594 in.)
		Rear: C*3 – D*4	–45.4 mm (–1.787 in.)
	Tire size: P265/70R16*5	Front: A*1 – B*2	64.9 mm (2.555 in.)
		Rear: C*3 – D*4	–45.1 mm (–1.776 in.)
	Tire size: P265/65R17*6	Front: A*1 – B*2	71.2 mm (2.803 in.)
		Rear: C*3 – D*4	–60.8 mm (–2.394 in.)

A*1: Ground clearance of the front drive shaft center
B*2: Ground clearance of the front adjusting cam bolt center
C*3: Ground clearance of the rear axle shaft center
D*4: Ground clearance of the leaf spring front side bushing center
*5: Off–road package
*6: Sport suspention package

Front wheel Alignment	UCK30L–ASSSKA		
	Tire size: P265/70R16	Front: A*1 – B*2	67.5 mm (2.657 in.)
		Rear: C*3 – D*4	–29.4 mm (1.157 in.)
	Tire size: P265/65R17	Front: A*1 – B*2	67.1 mm (2.642 in.)
		Rear: C*3 – D*4	–30.4 mm (–1.197 in.)
	Tire size: P265/70R16*5	Front: A*1 – B*2	66.3 mm (2.610 in.)
		Rear: C*3 – D*4	–30.0 mm (–1.181 in.)
	Tire size: P265/65R17*6	Front: A*1 – B*2	70.4 mm (2.771 in.)
		Rear: C*3 – D*4	–30.5 mm (–1.201 in.)
Front wheel Alignment	UCK30L–ASSLKA		
	Tire size: P265/70R16	Front: A*1 – B*2	65.1 mm (2.563 in.)
		Rear: C*3 – D*4	–34.4 mm (–1.354 in.)
	Tire size: P265/65R17	Front: A*1 – B*2	64.8 mm (2.551 in.)
		Rear: C*3 – D*4	–35.4 mm (–1.394 in.)
	Tire size: P265/70R16*5	Front: A*1 – B*2	63.8 mm (2.512 in.)
		Rear: C*3 – D*4	–35.0 mm (–1.378 in.)
	Tire size: P265/65R17*6	Front: A*1 – B*2	68.3 mm (2.689 in.)
		Rear: C*3 – D*4	–34.8 mm (–1.370 in.)

A*1: Ground clearance of the front drive shaft center
B*2: Ground clearance of the front adjusting cam bolt center
C*3: Ground clearance of the rear axle shaft center
D*4: Ground clearance of the leaf spring front side bushing center
*5: Off–road package
*6: Sport suspention package

Front wheel Alignment	◀ Vehicle height (4WD model for U.S.A.)		
	UCK40L–TRSSKA		
	Tire size: P245/70R16	Front: A*1 – B*2	58.0 mm (2.283 in.)
		Rear: C*3 – D*4	–65.3 mm (–2.571 in.)
	Tire size: P265/70R16	Front: A*1 – B*2	57.8 mm (2.276 in.)
		Rear: C*3 – D*4	–65.7 mm (–2.587 in.)
	VCK40L–ARMSKA		
	Tire size: P245/70R16	Front: A*1 – B*2	33.6 mm (1.323 in.)
		Rear: C*3 – D*4	–72.9 mm (–2.870 in.)
	Tire size: P265/70R16	Front: A*1 – B*2	33.4 mm (1.315 in.)
		Rear: C*3 – D*4	–73.3 mm (–2.886 in.)
	VCK40L–ARSSKA		
	Tire size: P245/70R16	Front: A*1 – B*2	36.3 mm (1.429 in.)
		Rear: C*3 – D*4	–72.9 mm (–2.870 in.)
	Tire size: P265/70R16	Front: A*1 – B*2	36.2 mm (1.425 in.)
		Rear: C*3 – D*4	–73.3 mm (–2.886 in.)
	UCK40L–ARSSKA		
	Tire size: P245/70R16	Front: A*1 – B*2	45.7 mm (1.799 in.)
		Rear: C*3 – D*4	–61.4 mm (–2.417 in.)
	Tire size: P265/70R16	Front: A*1 – B*2	45.5 mm (1.791 in.)
		Rear: C*3 – D*4	–61.8 mm (–2.433 in.)
	Tire size: P265/65R17	Front: A*1 – B*2	45.1 mm (1.776 in.)
		Rear: C*3 – D*4	–62.9 mm (–2.476 in.)
	Tire size: P265/70R16*5	Front: A*1 – B*2	45.7 mm (1.799 in.)
		Rear: C*3 – D*4	–62.2 mm (–2.449 in.)
	UCK40L–ARSLKA		
	Tire size: P265/70R16	Front: A*1 – B*2	43.5 mm (2.642 in.)
		Rear: C*3 – D*4	–67.1 mm (–2.642 in.)
	Tire size: P265/65R17	Front: A*1 – B*2	43.1 mm (1.697 in.)
		Rear: C*3 – D*4	–68.2 mm (–2.685 in.)
	Tire size: P265/70R16*5	Front: A*1 – B*2	43.8 mm (1.724 in.)
		Rear: C*3 – D*4	–67.4 mm (–2.654 in.)
	UCK40L–ASSSKA		
	Tire size: P265/70R16	Front: A*1 – B*2	42.8 mm (1.685 in.)
		Rear: C*3 – D*4	–45.2 mm (–1.780 in.)
	Tire size: P265/65R17	Front: A*1 – B*2	42.5 mm (1.673 in.)
		Rear: C*3 – D*4	–46.2 mm (–1.189 in.)
	Tire size: P265/70R16*5	Front: A*1 – B*2	43.1 mm (1.697 in.)
		Rear: C*3 – D*4	–45.5 mm (–1.791 in.)
	UCK40L–ASSLKA		
	Tire size: P265/70R16	Front: A*1 – B*2	41.5 mm (1.634 in.)
		Rear: C*3 – D*4	–49.1 mm (–1.933 in.)
	Tire size: P265/65R17	Front: A*1 – B*2	41.1 mm (1.618 in.)
		Rear: C*3 – D*4	–50.1 mm (–1.972 in.)
	Tire size: P265/70R16*5	Front: A*1 – B*2	41.7 mm (1.642 in.)
		Rear: C*3 – D*4	–49.4 mm (–1.945 in.)

A*1: Ground clearance of the front drive shaft center
B*2: Ground clearance of the front adjusting cam bolt center
C*3: Ground clearance of the rear axle shaft center
D*4: Ground clearance of the leaf spring front side bushing center
*5: Off–road package

Front wheel Alignment	◀ Vehicle height (2WD model for CANADA)		
	VCK30L–TRSDKK		
	Tire size: P245/70R16	Front: A*1 – B*2	64.7 mm (2.547 in.)
		Rear: C*3 – D*4	–51.4 mm (–2.024 in.)
	UCK30L–ARSSKK		
	Tire size: P245/70R16	Front: A*1 – B*2	70.2 mm (2.764 in.)
		Rear: C*3 – D*4	–38.2 mm (–1.504 in.)
	Tire size: P265/70R16	Front: A*1 – B*2	70.0 mm (2.756 in.)
		Rear: C*3 – D*4	–38.6 mm (–1.520 in.)
	Tire size: P265/65R17	Front: A*1 – B*2	69.6 mm (2.740 in.)
		Rear: C*3 – D*4	–39.5 mm (1.555 in.)
	◀ Vehicle height (4WD model for CANADA)		
	UCK40L–TRSDKK		
	Tire size: P245/70R16	Front: A*1 – B*2	54.4 mm (2.142 in.)
		Rear: C*3 – D*4	–66.4 mm (–2.614 in.)
Front wheel Alignment	UCK40L–ARSSKK		
	Tire size: P245/70R16	Front: A*1 – B*2	45.6 mm (1.795 in.)
		Rear: C*3 – D*4	–60.6 mm (–2.386 in.)
	Tire size: P265/70R16	Front: A*1 – B*2	45.4 mm (1.787 in.)
		Rear: C*3 – D*4	—61.0 mm (2.402 in.)
	Tire size: P265/65R17	Front: A*1 – B*2	45.0 mm (1.772 in.)
		Rear: C*3 – D*4	–62.0 mm (–2.440 in.)
	Tire size: P265/70R16*5	Front: A*1 – B*2	45.7 mm (1.799 in.)
		Rear: C*3 – D*4	–62.2 mm (–2.449 in.)
	UCK40L–ARSLKK		
	Tire size: P265/70R16	Front: A*1 – B*2	44.0 mm (1.732 in.)
		Rear: C*3 – D*4	–65.7 mm (–2.587 in.)
	Tire size: P265/65R17	Front: A*1 – B*2	43.6 mm (1.717 in.)
		Rear: C*3 – D*4	–66.8 mm (–2.630 in.)
	Tire size: P265/70R16*5	Front: A*1 – B*2	44.4 mm (1.748 in.)
		Rear: C*3 – D*4	–66.9 mm (–2.634 in.)

A*1: Ground clearance of the front drive shaft center
B*2: Ground clearance of the front adjusting cam bolt center
C*3: Ground clearance of the rear axle shaft center
D*4: Ground clearance of the leaf spring front side bushing center
*5: Off–road package

Front wheel Alignment	◀ Camber (2WD model for U.S.A.)	Right–left error: 30’ (0.5˚) or less
	VCK30L–TRMDKA Tire size: P245/70R16	 0˚01’ ± 45’ (0.02˚ ± 0.75˚)
	VCK30L–TRSDKA Tire size: P245/70R16	 –0˚01’ ± 45’ (–0.01˚ ± 0.75˚)
	VCK30L–ARMSKA Tire size: P245/70R16 Tire size: P265/70R16	 0˚08’ ± 45’ (0.14˚ ± 0.75˚) 0˚08’ ± 45’ (0.14˚ ± 0.75˚)
	VCK30L–ARSSKA Tire size: P245/70R16 Tire size: P265/70R16	 0˚06’ ± 45’ (0.10˚ ± 0.75˚) 0˚06’ ± 45’ (0.10˚ ± 0.75˚)
	UCK30L–ARSSKA Tire size: P245/70R16 Tire size: P265/70R16 Tire size: P265/65R17 Tire size: P265/70R16*5 Tire size: P265/65R17*6	 –0˚04’ ± 45’ (–0.06˚ ± 0.75˚) –0˚04’ ± 45’ (–0.06˚ ± 0.75˚) –0˚04’ ± 45’ (–0.06˚ ± 0.75˚) –0˚02’ ± 45’ (–0.04˚ ± 0.75˚) –0˚07’ ± 45’ (–0.11˚ ± 0.75˚)
	UCK30L–ARSLKA Tire size: P265/70R16 Tire size: P265/65R17 Tire size: P265/70R16*5 Tire size: P265/65R17*6	 –0˚01’ ± 45’ (–0.02˚ ± 0.75˚) –0˚01’ ± 45’ (–0.02˚ ± 0.75˚) 0˚00’ ± 45’ (0.00˚ ± 0.75˚) –0˚04’ ± 45’ (–0.07˚ ± 0.75˚)
	UCK30L–ASSSKA Tire size: P265/70R16 Tire size: P265/65R17 Tire size: P265/70R16*5 Tire size: P265/65R17*6	 –0˚04’ ± 45’ (–0.06˚ ± 0.75˚) –0˚04’ ± 45’ (–0.06˚ ± 0.75˚) –0˚02’ ± 45’ (–0.04˚ ± 0.75˚) –0˚07’ ± 45’ (–0.11˚ ± 0.75˚)
	UCK30L–ASSLKA Tire size: P265/70R16 Tire size: P265/65R17 Tire size: P265/70R16*5 Tire size: P265/65R17*6	 –0˚01’ ± 45’ (–0.02˚ ± 0.75˚) –0˚01’ ± 45’ (–0.02˚ ± 0.75˚) 0˚00’ ± 45’ (0.00˚ ± 0.75˚) –0˚04’ ± 45’ (–0.07˚ ± 0.75˚)

*5: Off–road package

*6: Sport suspention package

Front wheel Alignment	◀ Camber (4WD model for U.S.A.)	Right–left error: 30’ (0.5˚) or less
	UCK40L–TRSSKA	
	Tire size: P245/70R16	0˚08’ ± 45’ (0.14˚ ± 0.75˚)
	Tire size: P265/70R16	0˚08’ ± 45’ (0.14˚ ± 0.75˚)
	VCK40L–ARMSKA	
	Tire size: P245/70R16	0˚22’ ± 45’ (0.37˚ ± 0.75˚)
	Tire size: P265/70R16	0˚22’ ± 45’ (0.37˚ ± 0.75˚)
	VCK40L–ARSSKA	
	Tire size: P245/70R16	0˚22’ ± 45’ (0.36˚ ± 0.75˚)
	Tire size: P265/70R16	0˚22’ ± 45’ (0.36˚ ± 0.75˚)
	UCK40L–ARSSKA	
	Tire size: P245/70R16	0˚16’ ± 45’ (0.26˚ ± 0.75˚)
	Tire size: P265/70R16	0˚16’ ± 45’ (0.26˚ ± 0.75˚)
	Tire size: P265/65R17	0˚16’ ± 45’ (0.26˚ ± 0.75˚)
	Tire size: P265/70R16*5	0˚16’ ± 45’ (0.26˚ ± 0.75˚)
	UCK40L–ARSLKA	
	Tire size: P265/70R16	0˚17’ ± 45’ (0.29˚ ± 0.75˚)
	Tire size: P265/65R17	0˚17’ ± 45’ (0.29˚ ± 0.75˚)
	Tire size: P265/70R16*5	0˚17’ ± 45’ (0.28˚ ± 0.75˚)
	UCK40L–ASSSKA	
	Tire size: P265/70R16	0˚16’ ± 45’ (0.27˚ ± 0.75˚)
	Tire size: P265/65R17	0˚16’ ± 45’ (0.27˚ ± 0.75˚)
	Tire size: P265/70R16*5	0˚16’ ± 45’ (0.27˚ ± 0.75˚)
	UCK40L–ASSLKA	
	Tire size: P265/70R16	0˚17’ ± 45’ (0.29˚ ± 0.75˚)
	Tire size: P265/65R17	0˚17’ ± 45’ (0.29˚ ± 0.75˚)
	Tire size: P265/70R16*5	0˚17’ ± 45’ (0.28˚ ± 0.75˚)
	◀ Camber (2WD model for CANADA)	Right–left error: 30’ (0.5˚) or less
	VCK30L–TRSDKK	
	Tire size: P245/70R16	0˚01’ ± 45’ (0.02˚ ± 0.75˚)
	UCK30L–ARSSKK	
	Tire size: P245/70R16	–0˚05’ ± 45’ (–0.08˚ ± 0.75˚)
	Tire size: P265/70R16	–0˚05’ ± 45’ (–0.08˚ ± 0.75˚)
	Tire size: P265/65R17	–0˚05’ ± 45’ (–0.08˚ ± 0.75˚)
	◀ Camber (4WD model for CANADA)	Right–left error: 30’ (0.5˚) or less
	UCK40L–TRSDKK	
	Tire size: P245/70R16	0˚01’ ± 45’ (0.18˚ ± 0.75˚)
	UCK40L–ARSSKK	
	Tire size: P245/70R16	0˚16’ ± 45’ (0.26˚ ± 0.75˚)
	Tire size: P265/70R16	0˚16’ ± 45’ (0.26˚ ± 0.75˚)
	Tire size: P265/65R17	0˚16’ ± 45’ (0.26˚ ± 0.75˚)
	Tire size: P265/70R16*5	0˚16’ ± 45’ (0.26˚ ± 0.75˚)
	UCK40L–ARSLKK	
	Tire size: P265/70R16	0˚17’ ± 45’ (0.28˚ ± 0.75˚)
	Tire size: P265/65R17	0˚17’ ± 45’ (0.28˚ ± 0.75˚)
	Tire size: P265/70R16*5	0˚17’ ± 45’ (0.28˚ ± 0.75˚)

*5: Off–road package

Front wheel Alignment	◀ Caster (2WD model for U.S.A.)	Right–left error: 30' (0.5°) or less
	VCK30L–TRMDKA Tire size: P245/70R16	 1°54' ± 45' (1.90° ± 0.75°)
	VCK30L–TRSDKA Tire size: P245/70R16	 1°56' ± 45' (1.93° ± 0.75°)
	VCK30L–ARMSKA Tire size: P245/70R16 Tire size: P265/70R16	 1°50' ± 45' (1.84° ± 0.75°) 1°53' ± 45' (1.88° ± 0.75°)
	VCK30L–ARSSKA Tire size: P245/70R16 Tire size: P265/70R16	 1°53' ± 45' (1.88° ± 0.75°) 1°55' ± 45' (1.92° ± 0.75°)
	UCK30L–ARSSKA Tire size: P245/70R16 Tire size: P265/70R16 Tire size: P265/65R17 Tire size: P265/70R16*5 Tire size: P265/65R17*6	 2°16' ± 45' (2.27° ± 0.75°) 2°18' ± 45' (2.30° ± 0.75°) 2°23' ± 45' (2.38° ± 0.75°) 2°19' ± 45' (2.32° ± 0.75°) 2°02' ± 45' (2.04° ± 0.75°)
	UCK30L–ARSLKA Tire size: P265/70R16 Tire size: P265/65R17 Tire size: P265/70R16*5 Tire size: P265/65R17*6	 2°08' ± 45' (2.14° ± 0.75°) 2°13' ± 45' (2.22° ± 0.75°) 2°10' ± 45' (2.16° ± 0.75°) 1°54' ± 45' (1.90° ± 0.75°)
	UCK30L–ASSSKA Tire size: P265/70R16 Tire size: P265/65R17 Tire size: P265/70R16*5 Tire size: P265/65R17*6	 2°31' ± 45' (2.52° ± 0.75°) 2°36' ± 45' (2.60° ± 0.75°) 2°32' ± 45' (2.54° ± 0.75°) 2°37' ± 45' (2.62° ± 0.75°)
	UCK30L–ASSLKA Tire size: P265/70R16 Tire size: P265/65R17 Tire size: P265/70R16*5 Tire size: P265/65R17*6	 2°22' ± 45' (2.37° ± 0.75°) 2°27' ± 45' (2.45° ± 0.75°) 2°23' ± 45' (2.39° ± 0.75°) 2°25' ± 45' (2.50° ± 0.75°)

*5: Off–road package

*6: Sport suspention package

Front wheel Alignment	◀ Caster (4WD model for U.S.A.)	Right–left error: 30' (0.5°) or less
	UCK40L–TRSSKA	
	Tire size: P245/70R16	1°28' ± 45' (1.47° ± 0.75°)
	Tire size: P265/70R16	1°30' ± 45' (1.50° ± 0.75°)
	VCK40L–ARMSKA	
	Tire size: P245/70R16	1°07' ± 45' (1.11° ± 0.75°)
	Tire size: P265/70R16	1°08' ± 45' (1.14° ± 0.75°)
	VCK40L–ARSSKA	
	Tire size: P245/70R16	1°07' ± 45' (1.12° ± 0.75°)
	Tire size: P265/70R16	1°10' ± 45' (1.16° ± 0.75°)
	UCK40L–ARSSKA	
	Tire size: P245/70R16	1°29' ± 45' (1.49° ± 0.75°)
	Tire size: P265/70R16	1°31' ± 45' (1.52° ± 0.75°)
	Tire size: P265/65R17	1°40' ± 45' (1.60° ± 0.75°)
	Tire size: P265/70R16*5	1°34' ± 45' (1.56° ± 0.75°)
	UCK40L–ASSSKA	
	Tire size: P265/70R16	1°53' ± 45' (1.89° ± 0.75°)
	Tire size: P265/65R17	1°58' ± 45' (1.97° ± 0.75°)
	Tire size: P265/70R16*5	1°56' ± 45' (1.93° ± 0.75°)
	UCK40L–ASSLKA	
	Tire size: P265/70R16	1°47' ± 45' (1.78° ± 0.75°)
	Tire size: P265/65R17	1°52' ± 45' (1.86° ± 0.75°)
	Tire size: P265/70R16*5	1°49' ± 45' (1.81° ± 0.75°)
	UCK40L–ARSLKA	
	Tire size: P265/70R16	1°22' ± 45' (1.36° ± 0.75°)
	Tire size: P265/65R17	1°27' ± 45' (1.45° ± 0.75°)
	Tire size: P265/70R16*5	1°20' ± 45' (1.40° ± 0.75°)
	◀ Caster (2WD model for CANADA)	Right–left error: 30' (0.5°) or less
	VCK30L–TRSDKK	
	Tire size: P245/70R16	1°54' ± 45' (1.90° ± 0.75°)
	UCK30L–ARSSKK	
	Tire size: P245/70R16	2°17' ± 45' (2.29° ± 0.75°)
	Tire size: P265/70R16	2°20' ± 45' (2.33° ± 0.75°)
	Tire size: P265/65R17	2°24' ± 45' (2.40° ± 0.75°)
	◀ Caster (4WD model for CANADA)	Right–left error: 30' (0.5°) or less
	UCK40L–TRSDKK	
	Tire size: P245/70R16	1°25' ± 45' (1.42° ± 0.75°)
	UCK40L–ARSSKK	
	Tire size: P245/70R16	1°31' ± 45' (1.51° ± 0.75°)
	Tire size: P265/70R16	1°32' ± 45' (1.54° ± 0.75°)
	Tire size: P265/65R17	1°37' ± 45' (1.62° ± 0.75°)
	Tire size: P265/70R16*5	1°34' ± 45' (1.56° ± 0.75°)
	UCK40L–ARSLKK	
	Tire size: P265/70R16	1°24' ± 45' (1.40° ± 0.75°)
	Tire size: P265/65R17	1°29' ± 45' (1.48° ± 0.75°)
	Tire size: P265/70R16*5	1°25' ± 45' (1.42° ± 0.75°)

*5: Off–road package

Front wheel Alignment	◀ Steering axis inclination (2WD model for U.S.A.)	Right–left error: 30’ (0.5˚) or less
	VCK30L–TRMDKA Tire size: P245/70R16	 10˚43’ ± 45’ (10.72˚ ± 0.75˚)
	VCK30L–TRSDKA Tire size: P245/70R16	 10˚46’ ± 45’ (10.76˚ ± 0.75˚)
	VCK30L–ARMSKA Tire size: P245/70R16 Tire size: P265/70R16	 10˚35’ ± 45’ (10.59˚ ± 0.75˚) 10˚35’ ± 45’ (10.59˚ ± 0.75˚)
	VCK30L–ARSSKA Tire size: P245/70R16 Tire size: P265/70R16	 10˚38’ ± 45’ (10.63˚ ± 0.75˚) 10˚38’ ± 45’ (10.63˚ ± 0.75˚)
	UCK30L–ARSSKA Tire size: P245/70R16 Tire size: P265/70R16 Tire size: P265/65R17 Tire size: P265/70R16*5 Tire size: P265/65R17*6	 10˚49’ ± 45’ (10.81˚ ± 0.75˚) 10˚49’ ± 45’ (10.81˚ ± 0.75˚) 10˚49’ ± 45’ (10.81˚ ± 0.75˚) 10˚48’ ± 45’ (10.79˚ ± 0.75˚) 10˚52’ ± 45’ (10.86˚ ± 0.75˚)
	UCK30L–ARSLKA Tire size: P265/70R16 Tire size: P265/65R17 Tire size: P265/70R16*5 Tire size: P265/65R17*6	 10˚46’ ± 45’ (10.76˚ ± 0.75˚) 10˚46’ ± 45’ (10.76˚ ± 0.75˚) 10˚44’ ± 45’ (10.74˚ ± 0.75˚) 10˚49’ ± 45’ (10.82˚ ± 0.75˚)
	UCK30L–ASSSKA Tire size: P265/70R16 Tire size: P265/65R17 Tire size: P265/70R16*5 Tire size: P265/65R17*6	 10˚49’ ± 45’ (10.81˚ ± 0.75˚) 10˚49’ ± 45’ (10.81˚ ± 0.75˚) 10˚47’ ± 45’ (10.79˚ ± 0.75˚) 10˚52’ ± 45’ (10.86˚ ± 0.75˚)
	UCK30L–ASSLKA Tire size: P265/70R16 Tire size: P265/65R17 Tire size: P265/70R16*5 Tire size: P265/65R17*6	 10˚46’ ± 45’ (10.76˚ ± 0.75˚) 10˚46’ ± 45’ (10.76˚ ± 0.75˚) 10˚44’ ± 45’ (10.74˚ ± 0.75˚) 10˚49’ ± 45’ (10.82˚ ± 0.75˚)

*5: Off–road package

*6: Sport suspention package

Front wheel Alignment	◀ Steering axis inclination (4WD model for U.S.A.)	Right–left error: 30' (0.5°) or less
	UCK40L–TRSSKA	
	Tire size: P245/70R16	10°37' ± 45' (10.62° ± 0.75°)
	Tire size: P265/70R16	10°37' ± 45' (10.62° ± 0.75°)
	VCK40L–ARMSKA	
	Tire size: P245/70R16	10°22' ± 45' (10.37° ± 0.75°)
	Tire size: P265/70R16	10°22' ± 45' (10.37° ± 0.75°)
	VCK40L–ARSSKA	
	Tire size: P245/70R16	10°23' ± 45' (10.39° ± 0.75°)
	Tire size: P265/70R16	10°23' ± 45' (10.39° ± 0.75°)
	UCK40L–ARSSKA	
	Tire size: P245/70R16	10°29' ± 45' (10.49° ± 0.75°)
	Tire size: P265/70R16	10°29' ± 45' (10.49° ± 0.75°)
	Tire size: P265/65R17	10°29' ± 45' (10.49° ± 0.75°)
	Tire size: P265/70R16*5	10°29' ± 45' (10.49° ± 0.75°)
	UCK40L–ARSLKA	
	Tire size: P265/70R16	10°28' ± 45' (10.46° ± 0.75°)
	Tire size: P265/65R17	10°28' ± 45' (10.46° ± 0.75°)
	Tire size: P265/70R16*5	10°28' ± 45' (10.46° ± 0.75°)
	UCK40L–ASSSKA	
	Tire size: P265/70R16	10°29' ± 45' (10.48° ± 0.75°)
	Tire size: P265/65R17	10°29' ± 45' (10.48° ± 0.75°)
	Tire size: P265/70R16*5	10°29' ± 45' (10.48° ± 0.75°)
	UCK40L–ASSLKA	
	Tire size: P265/70R16	10°28' ± 45' (10.46° ± 0.75°)
	Tire size: P265/65R17	10°28' ± 45' (10.46° ± 0.75°)
	Tire size: P265/70R16*5	10°28' ± 45' (10.46° ± 0.75°)
	◀ Steering axis inclination (2WD model for CANADA)	Right–left error: 30' (0.5°) or less
	VCK30L–TRSDKK	
	Tire size: P245/70R16	10°43' ± 45' (10.72° ± 0.75°)
	UCK30L–ARSSKK	
	Tire size: P245/70R16	10°50' ± 45' (10.83° ± 0.75°)
	Tire size: P265/70R16	10°50' ± 45' (10.83° ± 0.75°)
	Tire size: P265/65R17	10°50' ± 45' (10.83° ± 0.75°)
	◀ Steering axis inclination (4WD model for CANADA)	Right–left error: 30' (0.5°) or less
	UCK40L–TRSDKK	
	Tire size: P245/70R16	10°35' ± 45' (10.58° ± 0.75°)
	UCK40L–ARSSKK	
	Tire size: P245/70R16	10°29' ± 45' (10.49° ± 0.75°)
	Tire size: P265/70R16	10°29' ± 45' (10.49° ± 0.75°)
	Tire size: P265/65R17	10°29' ± 45' (10.49° ± 0.75°)
	Tire size: P265/70R16*5	10°29' ± 45' (10.49° ± 0.75°)
	UCK40L–ARSLKK	
	Tire size: P265/70R16	10°28' ± 45' (10.47° ± 0.75°)
	Tire size: P265/65R17	10°28' ± 45' (10.47° ± 0.75°)
	Tire size: P265/70R16*5	10°28' ± 45' (10.47° ± 0.75°)

*5: Off–road package

Front wheel Alignment	◀ Toe–in (total) (2WD model for U.S.A.)	Rack end length difference: 1.5 mm (0.059 in.) or less
	VCK30L–TRMDKA Tire size: P245/70R16	 0°10' ± 12' (0.16° ± 0.2°, 2.04 ± 2 mm, 0.08 ± 0.08 in.)
	VCK30L–TRSDKA Tire size: P245/70R16	 0°08' ± 12' (0.14° ± 0.2°, 1.88 ± 2 mm, 0.07 ± 0.08 in.)
	VCK30L–ARMSKA Tire size: P245/70R16 Tire size: P265/70R16	 0°11' ± 12' (0.19° ± 0.2°, 2.54 ± 2 mm, 0.10 ± 0.08 in.) 0°10' ± 12' (0.18° ± 0.2°, 2.44 ± 2 mm, 0.10 ± 0.08 in.)
	VCK30L–ARSSKA Tire size: P245/70R16 Tire size: P265/70R16	 0°10' ± 12' (0.18° ± 0.2°, 2.37 ± 2 mm, 0.09 ± 0.08 in.) 0°10' ± 12' (0.17° ± 0.2°, 2.28 ± 2 mm, 0.09 ± 0.08 in.)
	UCK30L–ARSSKA Tire size: P245/70R16 Tire size: P265/70R16 Tire size: P265/65R17 Tire size: P265/70R16*5 Tire size: P265/65R17*6	 0°08' ± 12' (0.13° ± 0.2°, 1.69 ± 2 mm, 0.07 ± 0.08 in.) 0°07' ± 12' (0.12° ± 0.2°, 1.63 ± 2 mm, 0.06 ± 0.08 in.) 0°07' ± 12' (0.12° ± 0.2°, 1.63 ± 2 mm, 0.06 ± 0.08 in.) 0°07' ± 12' (0.12° ± 0.2°, 1.69 ± 2 mm, 0.07 ± 0.08 in.) 0°07' ± 12' (0.11° ± 0.2°, 1.44 ± 2 mm, 0.06 ± 0.08 in.)
	UCK30L–ARSLKA Tire size: P265/70R16 Tire size: P265/65R17 Tire size: P265/70R16*5 Tire size: P265/65R17*6	 0°08' ± 12' (0.13° ± 0.2°, 1.79 ± 2 mm, 0.07 ± 0.08 in.) 0°08' ± 12' (0.13° ± 0.2°, 1.79 ± 2 mm, 0.07 ± 0.08 in.) 0°08' ± 12' (0.14° ± 0.2°, 1.86 ± 2 mm, 0.07 ± 0.08 in.) 0°07' ± 12' (0.12° ± 0.2°, 1.59 ± 2 mm, 0.06 ± 0.08 in.)
	UCK30L–ASSSKA Tire size: P265/70R16 Tire size: P265/65R17 Tire size: P265/70R16*5 Tire size: P265/65R17*6	 0°07' ± 12' (0.12° ± 0.2°, 1.63 ± 2 mm, 0.06 ± 0.08 in.) 0°07' ± 12' (0.12° ± 0.2°, 1.63 ± 2 mm, 0.06 ± 0.08 in.) 0°07' ± 12' (0.12° ± 0.2°, 1.69 ± 2 mm, 0.07 ± 0.08 in.) 0°07' ± 12' (0.11° ± 0.2°, 1.44 ± 2 mm, 0.06 ± 0.08 in.)
	UCK30L–ASSLKA Tire size: P265/70R16 Tire size: P265/65R17 Tire size: P265/70R16*5 Tire size: P265/65R17*6	 0°08' ± 12' (0.13° ± 0.2°, 1.79 ± 2 mm, 0.07 ± 0.08 in.) 0°08' ± 12' (0.13° ± 0.2°, 1.79 ± 2 mm, 0.07 ± 0.08 in.) 0°08' ± 12' (0.14° ± 0.2°, 1.86 ± 2 mm, 0.07 ± 0.08 in.) 0°07' ± 12' (0.12° ± 0.2°, 1.59 ± 2 mm, 0.06 ± 0.08 in.)

*5: Off–road package

*6: Sport suspention package

Front wheel Alignment	◀ Toe–in (total) (4WD model for U.S.A.)	Rack end length difference: 1.5 mm (0.059 in.) or less
	UCK40L–TRSSKA Tire size: P245/70R16 Tire size: P265/70R16	 0°03’ ± 12’ (0.05° ± 0.2°, 0.66 ± 2 mm, 0.03 ± 0.08 in.) 0°03’ ± 12’ (0.05° ± 0.2°, 0.64 ± 2 mm, 0.03 ± 0.08 in.)
	VCK40L–ARMSKA Tire size: P245/70R16 Tire size: P265/70R16	 0°10’ ± 12’ (0.17° ± 0.2°, 2.17 ± 2 mm, 0.09 ± 0.08 in.) 0°09’ ± 12’ (0.15° ± 0.2°, 2.10 ± 2 mm, 0.08 ± 0.08 in.)
	VCK40L–ARSSKA Tire size: P245/70R16 Tire size: P265/70R16	 0°09’ ± 12’ (0.15° ± 0.2°, 2.02 ± 2 mm, 0.08 ± 0.08 in.) 0°08’ ± 12’ (0.14° ± 0.2°, 1.95 ± 2 mm, 0.08 ± 0.08 in.)
	UCK40L–ARSSKA Tire size: P245/70R16 Tire size: P265/70R16 Tire size: P265/65R17 Tire size: P265/70R16*5	 0°07’ ± 12’ (0.11° ± 0.2°, 1.38 ± 2 mm, 0.09 ± 0.08 in.) 0°06’ ± 12’ (0.10° ± 0.2°, 1.33 ± 2 mm, 0.05 ± 0.08 in.) 0°06’ ± 12’ (0.10° ± 0.2°, 1.33 ± 2 mm, 0.05 ± 0.08 in.) 0°06’ ± 12’ (0.10° ± 0.2°, 1.31 ± 2 mm, 0.05 ± 0.08 in.)
	UCK40L–ARSLKA Tire size: P265/70R16 Tire size: P265/65R17 Tire size: P265/70R16*5	 0°07’ ± 12’ (0.11° ± 0.2°, 1.49 ± 2 mm, 0.06 ± 0.08 in.) 0°07’ ± 12’ (0.11° ± 0.2°, 1.49 ± 2 mm, 0.06 ± 0.08 in.) 0°07’ ± 12’ (0.11° ± 0.2°, 1.46 ± 2 mm, 0.06 ± 0.08 in.)
	UCK40L–ASSSKA Tire size: P265/70R16 Tire size: P265/65R17 Tire size: P265/70R16*5	 0°06’ ± 12’ (0.10° ± 0.2°, 1.38 ± 2 mm, 0.05 ± 0.08 in.) 0°06’ ± 12’ (0.10° ± 0.2°, 1.38 ± 2 mm, 0.05 ± 0.08 in.) 0°06’ ± 12’ (0.10° ± 0.2°, 1.36 ± 2 mm, 0.05 ± 0.08 in.)
	UCK40L–ASSLKA Tire size: P265/70R16 Tire size: P265/65R17 Tire size: P265/70R16*5	 0°07’ ± 12’ (0.11° ± 0.2°, 1.49 ± 2 mm, 0.06 ± 0.08 in.) 0°07’ ± 12’ (0.11° ± 0.2°, 1.49 ± 2 mm, 0.06 ± 0.08 in.) 0°07’ ± 12’ (0.11° ± 0.2°, 1.46 ± 2 mm, 0.06 ± 0.08 in.)
	◀ Toe–in (total) (2WD model for CANADA)	Rack end length difference: 1.5 mm (0.059 in.) or less
	VCK30L–TRSDKK Tire size: P245/70R16	 0°09’ ± 12’ (0.15° ± 0.2°, 2.02 ± 2 mm, 0.08 ± 0.08 in.)
	UCK30L–ARSSKK Tire size: P245/70R16 Tire size: P265/70R16 Tire size: P265/65R17	 0°07’ ± 12’ (0.12° ± 0.2°, 1.60 ± 2 mm, 0.06 ± 0.08 in.) 0°07’ ± 12’ (0.11° ± 0.2°, 1.54 ± 2 mm, 0.06 ± 0.08 in.) 0°07’ ± 12’ (0.11° ± 0.2°, 1.54 ± 2 mm, 0.06 ± 0.08 in.)
	◀ Toe–in (total) (4WD model for CANADA)	Rack end length difference: 1.5 mm (0.059 in.) or less
	UCK40L–TRSDKK Tire size: P245/70R16	 0°06’ ± 12’ (0.07° ± 0.2°, 0.89 ± 2 mm, 0.04 ± 0.08 in.)
	UCK40L–ARSLKK Tire size: P265/65R17 Tire size: P265/70R16 Tire size: P265/70R16*5	 0°07’ ± 12’ (0.11° ± 0.2°, 1.45 ± 2 mm, 0.06 ± 0.08 in.) 0°07’ ± 12’ (0.11° ± 0.2°, 1.45 ± 2 mm, 0.06 ± 0.08 in.) 0°06’ ± 12’ (0.10° ± 0.2°, 1.42 ± 2 mm, 0.06 ± 0.08 in.)
	UCK40L–ARSSKK Tire size: P245/70R16 Tire size: P265/70R16 Tire size: P265/65R17 Tire size: P265/70R16*5	 0°06’ ± 12’ (0.10° ± 0.2°, 1.38 ± 2 mm, 0.05 ± 0.08 in.) 0°06’ ± 12’ (0.10° ± 0.2°, 1.33 ± 2 mm, 0.05 ± 0.08 in.) 0°06’ ± 12’ (0.10° ± 0.2°, 1.33 ± 2 mm, 0.05 ± 0.08 in.) 0°06’ ± 12’ (0.10° ± 0.2°, 1.31 ± 2 mm, 0.05 ± 0.08 in.)

*5: Off–road package

	Wheel angle (2WD model for USA)		
	VCK30L–TRMDKA		
	Tire size: P245/70R16	Inside wheel	−36°28’ (−36.47°)
		Outside wheel: Reference	32°23’ (32.39°)
	VCK30L–TRSDKA		
	Tire size: P245/70R16	Inside wheel	−36°25’ (−36.41°)
		Outside wheel: Reference	32°20’ (32.34°)
	VCK30L–ARMSKA		
	Tire size: P245/70R16		
	Tire size: P265/70R16	Inside wheel	−36°25’ (−36.67°)
		Outside wheel: Reference	32°32’ (32.54°)
	VCK30L–ARSSKA		
	Tire size: P245/70R16		
	Tire size: P265/70R16	Inside wheel	−36°36’ (−36.60°)
		Outside wheel: Reference	32°29’ (32.49°)
	UCK30L–ARSSKA		
	Tire size: P245/70R16		
	Tire size: P265/70R16		
	Tire size: P265/65R17	Inside wheel	−36°20’ (−36.34°)
		Outside wheel: Reference	32°17’ (32.29°)
	Tire size: P265/70R16*5	Inside wheel	−36°21’ (−36.36°)
		Outside wheel: Reference	32°18’ (32.30°)
	Tire size: P265/65R17*6	Inside wheel	−36°16’ (−36.27°)
		Outside wheel: Reference	32°14’ (32.23°)
	UCK30L–ARSLKA		
	Tire size: P265/70R16		
	Tire size: P265/65R17	Inside wheel	−36°24’ (−36.40°)
		Outside wheel: Reference	32°20’ (32.34°)
	Tire size: P265/70R16*5	Inside wheel	−36°26’ (−36.43°)
		Outside wheel: Reference	32°22’ (32.36°)
	Tire size: P265/65R17*6	Inside wheel	−36°20’ (−36.33°)
		Outside wheel: Reference	32°16’ (32.27°)
	UCK30L–ASSSKA		
	Tire size: P265/70R16		
	Tire size: P265/65R17	Inside wheel	−36°20’ (−36.34°)
		Outside wheel: Reference	32°17’ (32.29°)
	Tire size: P265/70R16*5	Inside wheel	−36°21’ (−36.36°)
		Outside wheel: Reference	32°18’ (32.30°)
	Tire size: P265/65R17*6	Inside wheel	−36°16’ (−36.27°)
		Outside wheel: Reference	32°14’ (32.23°)
	UCK30L–ASSLKA		
	Tire size: P265/70R16		
	Tire size: P265/65R17	Inside wheel	−36°24’ (−36.40°)
		Outside wheel: Reference	32°20’ (32.34°)
	Tire size: P265/70R16*5	Inside wheel	−36°26’ (−36.43°)
		Outside wheel: Reference	32°22’ (32.36°)
	Tire size: P265/65R17*6	Inside wheel	−36°20’ (−36.33°)
		Outside wheel: Reference	32°16’ (32.27°)

*5: Off–road package

*6: Sport suspention package

	Wheel angle (4WD model for USA)		
	UCK40L–TRSSKA Tire size: P245/70R16 Tire size: P265/70R16	 Inside wheel Outside wheel: Reference	 −36°41’ (−36.69°) 32°28’ (32.46°)
	VCK40L–ARMSKA Tire size: P245/70R16 Tire size: P265/70R16	 Inside wheel Outside wheel: Reference	 −37°16’ (−37.27°) 32°52’ (32.86°)
	VCK40L–ARSSKA Tire size: P245/70R16 Tire size: P265/70R16	 Inside wheel Outside wheel: Reference	 −37°13’ (−37.21°) 32°49’ (32.82°)
	UCK40L–ARSSKA Tire size: P245/70R16 Tire size: P265/70R16 Tire size: P265/65R17 Tire size: P265/70R16*5 	 Inside wheel Outside wheel: Reference Inside wheel Outside wheel: Reference	 −36°60’ (−36.95°) 32°39’ (32.65°) −36°60’ (−36.95°) 32°38’ (32.64°)
	UCK40L–ARSLKA Tire size: P265/70R16 Tire size: P265/65R17 Tire size: P265/70R16*5 	 Inside wheel Outside wheel: Reference Inside wheel Outside wheel: Reference	 −37°01’ (−37.02°) 32°41’ (32.69°) −37°01’ (−37.01°) 32°41’ (32.69°)
	UCK40L–ASSSKA Tire size: P265/70R16 Tire size: P265/65R17 Tire size: P265/70R16*5 	 Inside wheel Outside wheel: Reference Inside wheel Outside wheel: Reference	 −36°60’ (−36.97°) 32°40’ (32.66°) −36°60’ (−36.96°) 32°40’ (32.66°)
	UCK40L–ASSLKA Tire size: P265/70R16 Tire size: P265/65R17 Tire size: P265/70R16*5 	 Inside wheel Outside wheel: Reference Inside wheel Outside wheel: Reference	 −37°01’ (−37.02°) 32°41’ (32.69°) −37°01’ (−37.01°) 32°41’ (32.69°)

*5: Off–road package

	Wheel angle (2WD model for CANADA)		
	VCK30L–TRSDKK Tire size: P245/70R16	Inside wheel Outside wheel: Reference	−36˚28’ (−36.46˚) 32˚23’ (32.38˚)
	UCK30L–ARSSKK Tire size: P245/70R16 Tire size: P265/70R16 Tire size: P265/65R17	Inside wheel Outside wheel: Reference	−36˚19’ (−36.31˚) 32˚16’ (32.26˚)
	Wheel angle (4WD model for CANADA)		
	UCK40L–TRSDKK Tire size: P245/70R16	Inside wheel Outside wheel: Reference	−36˚46’ (−36.77˚) 32˚31’ (32.52˚)
	UCK40L–ARSSKK Tire size: P245/70R16 Tire size: P265/70R16 Tire size: P265/65R17	Inside wheel Outside wheel: Reference	−36˚60’ (−36.95˚) 32˚39’ (32.65˚)
	Tire size: P265/70R16*5	Inside wheel Outside wheel: Reference	−36˚60’ (−36.95˚) 32˚38’ (32.64˚)
	UCK40L–ARSLKK Tire size: P265/70R16 Tire size: P265/65R17	Inside wheel Outside wheel: Reference	−37˚00’ (−37.00˚) 32˚41’ (32.68˚)
	Tire size: P265/70R16*5	Inside wheel Outside wheel: Reference	−37˚00’ (−36.99˚) 32˚40’ (32.67˚)
Front drive shaft	Front drive shaft length		523.5 ± 2.0 mm (20.610 ± 0.079 in.)
Front suspension	Upper ball joint turning torque		0.7 – 4.4 N·m (7 – 45 kgf·cm, 6 – 39 in.·lbf)
Front suspension	Lower ball joint excessive play	Maximum	0.5 mm (0.020 in.)
	Lower ball joint turning torque		0.1 – 2.5 N·m (1 – 25 kgf·cm, 1 – 22 in.·lbf)
	Stabilizer bar link ball joint turning toque		0.05 – 2.0 N·m (0.5 – 20 kgf·cm, 0.4 – 17 in.·lbf)

*5: Off–road package

Front differential	Companion flange vertical runout	Maximum	0.10 mm (0.0039 in.)
	Companion flange lateral runout	Maximum	0.10 mm (0.0039 in.)
	Drive pinion preload (at starting)	New bearing	1.2 – 1.9 N·m (12 – 19 kgf·cm, 10.4 – 16.5 in.·lbf)
		Reused bearing	0.6 – 1.0 N·m (6 – 10 kgf·cm, 5.2 – 8.7 in.·lbf)
	Total preload (at starting)		Drive pinion preload plus 0.4 – 0.6 N·m (4 – 6 kgf·cm, 3.5 – 5.2 in.·lbf)
	Drive pinion to ring gear backlash		0.13 – 0.18 mm (0.0051 – 0.0071 in.)
	Side gear backlash		0 – 0.20 mm (0 – 0.0079 in.)
	Rear oil seal drive in depth		4.5 ± 0.3 mm (0.177 ± 0.012 in.)
	Side oil seal drive in depth		0 mm (0 in.)
	Side tube oil seal drive in depth		5.5 ± 0.3 mm (0.217 ± 0.012 in.)
	Side gear thrust washer thickness		0.96 – 1.04 mm (0.0378 – 0.0409 in.)
			1.06 – 1.14 mm (0.0417 – 0.0449 in.)
			1.16 – 1.24 mm (0.0457 – 0.0488 in.)
			1.26 – 1.34 mm (0.0496 –0.0528 in.)
	Side gear bearing adjusting washer thickness		2.00 – 2.02 mm (0.0787 – 0.0795 in.)
			2.03 – 2.05 mm (0.0799 – 00807 in.)
			2.06 – 2.08 mm (0.0811 – 0.0819 in.)
			2.09 – 2.11 mm (0.0823 – 0.0831 in.)
			2.12 – 2.14 mm (0.0835 – 0.0843 in.)
			2.15 – 2.17 mm (0.0846 – 0.0854 in.)
			2.18 – 2.20 mm (0.0858 – 0.0866 in.)
			2.21 – 2.23 mm (0.0870 – 0.0878 in.)
			2.24 – 2.26 mm (0.0882 – 0.0890 in.)
			2.27 – 2.29 mm (0.0894 – 0.0902 in.)
			2.30 – 2.32 mm (0.0906 – 0.0913 in.)
			2.33 – 2.35 mm (0.0917 – 0.0925 in.)
			2.36 – 2.38 mm (0.0929 – 0.0937 in.)
			2.39 – 2.41 mm (0.0941 – 0.0949 in.)
			2.42 – 2.44 mm (0.0953 – 0.0961 in.)
			2.45 – 2.47 mm (0.0965 – 0.0972 in.)
			2.48 – 2.50 mm (0.0976 – 0.0984 in.)
			2.51 – 2.53 mm (0.0988 – 0.0996 in.)
			2.54 – 2.56 mm (0.1000 – 01008 in.)
			2.57 – 2.59 mm (0.1012 – 0.1020 in.)
			2.60 – 2.62 mm (0.1024 – 0.1031 in.)
			2.63 – 2.65 mm (0.1035 – 0.1043 in.)
			2.66 – 2.68 mm (0.1047 – 0.1055 in.)
			2.69 – 2.71 mm (0.1059 – 0.1067 in.)
			2.72 – 2.74 mm (0.1071 – 0.1079 in.)
			2.75 – 2.77 mm (0.1083 – 0.1091 in.)
			2.78 – 2.80 mm (0.1094 – 0.1102 in.)

Front differential	Drive pinion bearing adjusting washer thickness		1.69 – 1.71 mm (0.0665 – 0.0673 in.)
			1.72 – 1.74 mm (0.0677 – 0.0685 in.)
			1.75 – 1.77 mm (0.0689 – 0.0697 in.)
			1.78 – 1.80 mm (0.0701 – 0.0709 in.)
			1.81 – 1.83 mm (0.0713 – 0.0720 in.)
			1.84 – 1.86 mm (0.0724 – 0.0732 in.)
			1.87 – 1.89 mm (0.0736 – 0.0744 in.)
			1.90 – 1.92 mm (0.0748 – 0.0756 in.)
			1.93 – 1.95 mm (0.0760 – 0.0768 in.)
			1.96 – 1.98 mm (0.0772 – 0.0780 in.)
			1.99 – 2.01 mm (0.0783 – 0.0791 in.)
			2.02 – 2.04 mm (0.0795 – 0.0803 in.)
			2.05 – 2.07 mm (0.0807 – 0.0815 in.)
			2.08 – 2.10 mm (0.0819 – 0.0827 in.)
			2.11 – 2.13 mm (0.0831 – 0.0839 in.)
			2.14 – 2.16 mm (0.0843 – 0.0850 in.)
			2.17 – 2.19 mm (0.0854 – 0.0862 in.)
			2.20 – 2.22 mm (0.0866 – 0.0874 in.)
			2.23 – 2.25 mm (0.0878 – 0.0886 in.)
			2.26 – 2.28 mm (0.0890 – 0.0898 in.)
			2.29 – 2.31 mm (0.0902 – 0.0909 in.)
			2.32 – 2.34 mm (0.0913 – 0.0921 in.)
	A.D.D. sleeve fork to clutch sleeve clearance		0.35 mm (0.0138 in.) or less
	Differential case needle bearing press in depth		0.3 ± 0.3 mm (0.012 ± 0.012 in.)
Rear axle shaft	Axle shaft bearing backlash	Maximum	0.7 mm (0.028 in.)
	Axle shaft deviation	Maximum	0.1 mm (0.004 in.)
	Shaft runout	Maximum	2.0 mm (0.079 in.)
	Flange runout	Maximum	0.1 mm (0.004 in.)
Rear differential	Companion flange runout	Maximum	0.09 mm (0.0035 in.)
	Ring gear runout	Maximum	0.05 mm (0.0020 in.)
	Drive pinion to ring gear backlash		0.13 – 0.18 mm (0.0051 – 0.0071 in.)
	Drive pinion preload (at starting)	New bearing	1.3 – 1.9 N·m (13 – 19 kgf·cm, 11.4 – 16.7 in.·lbf)
		Reused bearing	0.6 – 0.9 N·m (6.1 – 9.2 kgf·cm, 5.3 – 8.0 in.·lbf)
	Total preload (at starting)		Drive pinion preload plus 0.4 – 0.6 N·m (4 – 6 kgf·cm, 3.5 – 5.2 in.·lbf)
	Differential case runout	Maximum	0.04 mm (0.0016 in.)
	Side gear thrust washers for wear or damage		1.77 – 2.49 mm (0.0697 – 0.0980 in.)
	Clutch plate for wear or damage		1.57 – 1.63 mm (0.0618 – 0.0642 in.)
	Compression spring free length		26.4 mm (1.039 in.)
	Adjusting shim mark and thickness	A	0.15 mm (0.0059 in.)
		B	0.20 mm (0.0079 in.)
		C	0.25 mm (0.0098 in.)
		D	0.30 mm (0.0118 in.)
		E	0.35 mm (0.0138 in.)
Rear differential	Side gear backlash		0.05 – 0.20 mm (0.0020 – 0.0079 in.)

Rear differential	Differential case to rotation torque Standard	27.5 – 43.0 N·m (281 – 439 kgf·cm, 20 – 32 ft·lbf)
	Ring gear runout Maximum	0.05 mm (0.0020 in.)
	Drive pinion oil seal drive in depth	0 mm (0 in.)
	Side gear thrust washer thickness	1.80 mm (0.0709 in.)
		1.86 mm (0.0732 in.)
		1.92 mm (0.0756 in.)
		1.98 mm (0.0780 in.)
		2.04 mm (0.0803 in.)
		2.10 mm (0.0827 in.)
		2.22 mm (0.0850 in.)
		2.28 mm (0.0874 in.)
		2.34 mm (0.0898 in.)
		2.34 mm (0.0921 in.)
		2.40 mm (0.0945 in.)
		2.46 mm (0.0969 in.)

Rear differential	Side bearing adjusting washer thickness	58	2.58 mm (0.1015 in.)
		60	2.60 mm (0.1024 in.)
		62	2.62 mm (0.1031 in.)
		64	2.64 mm (0.1039 in.)
		66	2.66 mm (0.1047 in.)
		68	2.68 mm (0.1055 in.)
		70	2.70 mm (0.1063 in.)
		72	2.72 mm (0.1071 in.)
		74	2.74 mm (0.1079 in.)
		76	2.76 mm (0.1087 in.)
		78	2.78 mm (0.1094 in.)
		80	2.80 mm (0.1102 in.)
		82	2.82 mm (0.1110 in.)
		84	2.84 mm (0.1118 in.)
		86	2.86 mm (0.1126 in.)
		88	2.88 mm (0.1134 in.)
		90	2.90 mm (0.1142 in.)
		92	2.92 mm (0.1150 in.)
		94	2.94 mm (0.1157 in.)
		96	2.96 mm (0.1165 in.)
		98	2.98 mm (0.1173 in.)
		00	3.00 mm (0.1181 in.)
		02	3.02 mm (0.1189 in.)
		04	3.04 mm (0.1197 in.)
		06	3.06 mm (0.1205 in.)
		08	3.08 mm (0.1213 in.)
		10	3.10 mm (0.1220 in.)
		12	3.12 mm (0.1228 in.)
		14	3.14 mm (0.1236 in.)
		16	3.16 mm (0.1244 in.)
		18	3.18 mm (0.1252 in.)
		20	3.20 mm (0.1260 in.)
		22	3.22 mm (0.1268 in.)
		24	3.24 mm (0.1276 in.)
		26	3.26 mm (0.1283 in.)
		28	3.28 mm (0.1291 in.)
		30	3.30 mm (0.1299 in.)
		32	3.32 mm (0.1307 in.)
		34	3.34 mm (0.1315 in.)
		36	3.36 mm (0.1323 in.)
		38	3.38 mm (0.1331 in.)
		40	3.40 mm (0.1339 in.)
		42	3.42 mm (0.1346 in.)
		44	3.44 mm (0.1354 in.)
		46	3.46 mm (0.1362 in.)
		48	3.48 mm (0.1370 in.)

Rear differential	Drive pinion bearing adjusting washer thickness	87	1.87 mm (0.0736 in.)
		88	1.88 mm (0.0740 in.)
		89	1.89 mm (0.0744 in.)
		90	1.90 mm (0.0748 in.)
		91	1.91 mm (0.0752 in.)
		92	1.92 mm (0.0756 in.)
		93	1.93 mm (0.0760 in.)
		94	1.94 mm (0.0764 in.)
		95	1.95 mm (0.0768 in.)
		96	1.96 mm (0.0772 in.)
		97	1.97 mm (0.0776 in.)
		98	1.98 mm (0.0780 in.)
		99	1.99 mm (0.0783 in.)
		00	2.00 mm (0.0787 in.)
		01	2.01 mm (0.0791 in.)
		02	2.02 mm (0.0795 in.)
		03	2.03 mm (0.0799 in.)
		04	2.04 mm (0.0803 in.)
		05	2.05 mm (0.0807 in.)
		06	2.06 mm (0.0811 in.)
		07	2.07 mm (0.0815 in.)
		08	2.08 mm (0.0819 in.)
		09	2.09 mm (0.0823 in.)
		10	2.10 mm (0.0827 in.)
		11	2.11 mm (0.0831 in.)
		12	2.12 mm (0.0835 in.)
		13	2.13 mm (0.0839 in.)
		14	2.14 mm (0.0843 in.)
		15	2.15 mm (0.0846 in.)
		16	2.16 mm (0.0850 in.)
		17	2.17 mm (0.0854 in.)
		18	2.18 mm(0.0858 in.)
		19	2.19 mm (0.0862 in.)
		20	2.20 mm (0.0866 in.)
		21	2.21 mm (0.0870 in.)
		22	2.22 mm (0.0874 in.)
		23	2.23 mm (0.0878 in.)
		24	2.24 mm (0.0882 in.)
		25	2.25 mm (0.0886 in.)
		26	2.26 mm (0.0890 in.)
		27	2.27 mm (0.0894 in.)
		28	2.28 mm (0.0898 in.)

SS052–10

TORQUE SPECIFICATION

Part tightened	N·m	kgf·cm	ft·lbf
FRONT AXLE			
Hub nut	110	1,150	83
Tie rod end lock nut	55	560	41
Steering knuckle x Lower ball joint	80	820	59
Steering knuckle x Brake caliper	123	1,250	90
Steering knuckle x Dust cover	18	185	13
Drive shaft lock nut	235	2,400	173
Upper suspension arm x Upper ball joint	105	1,100	77
Brake line clamp x Steering knuckle	28	285	21
ABS speed sensor x Steering knuckle	8.0	82	71 ft·lbf
ABS speed sensor wire harness clamp x Steering knuckle	8.0	82	71 ft·lbf
ABS speed sensor wire harness clamp x Upper suspension arm	8.0	82	71 ft·lbf
Axle hub bearing lock nut (2WD)	274	2,800	203
FRONT DIFFERENTIAL			
Drive pinion x Companion flange	See page SA–38		
Differential front mounting cushion x Chassis frame	137	1,400	101
Differential rear mounting cushion x Chassis frame	87	890	64
Differential front mounting cushion x Differential	157	1,600	116
Differential rear mounting cushion x Differential	108	1,100	80
Ring gear x Differential case	97	985	71
Differential carrier x Differential tube	78	800	58
Differential carrier x Side bearing retainer	69	700	51
Differential x Front propeller shaft	74	750	54
A.D.D. clutch case x Differential	78	800	58
A.D.D. clutch case x Differential tube	78	800	58
A.D.D. actuator x A.D.D. clutch case	21	210	15
Tube with wire harness assembly clamp x Differential carrier	13	130	9
Drain plug	65	660	48
Filler plug	39	400	29
FRONT SUSPENSION			
Suspension support x Chassis frame	64	650	47
Piston rod x Suspension support	25	250	18
Lower suspension arm x Shock absorber	135	1,400	100
Upper suspension arm x Chassis frame	98	1,000	72
Lower suspension arm x Chassis frame	130	1,325	96
Lower suspension arm x Lower ball joint	140	1,450	103
Power steering gear – Left side nut	130	1,350	96
Power steering gear – Center bolt	165	1,700	122
Power steering gear – Right side bolt and nut	165	1,700	122
Tie rod end x Lower ball joint	91	930	67
No.1, No. 2 spring bumper	31 (23)	315 (235)	23 (17)
Lower suspension arm x Stabilizer bar link	69	700	51

( ) For use with SST

Part tightened	N·m	kgf·cm	ft·lbf
Stabilizer bar x Stabilizer bar link	19	190	14
Stabilizer bar bracket x Chassis frame	37	375	27
REAR AXLE			
Hub nut	110	1,150	83
Axle housing x Backing plate	69	700	51
Brake line union nut	15	155	11
ABS speed sensor x Axle housing	8.0	82	71 in.·lbf
REAR DIFFERENTIAL			
LH differential case x RH differential case	47	480	35
Differential carrier x Bearing cap	113	1,150	83
Differential case x Ring gear	125	1,270	92
Differential carrier x Axle housing	73	740	54
Drive pinion x Companion flange	See page SA–124		
REAR SUSPENSION			
Shock absorber x Chassis frame	20	200	15
Shock absorber x Axle housing	87	890	64
U–bolt x Spring seat	133	1,350	98
Leaf spring front side set nut	170	1,735	125
Leaf spring x Shackle	170	1,735	125
Shackle x Chassis frame	170	1,735	125
Leaf spring center bolt	44	450	33
Bracket x Axle housing	29	296	21
Stabilizer bar link x Chassis frame	69	704	51
Stabilizer bar x Stabilizer bar link	69	704	51

BRAKE

SS084–02

SERVICE DATA

Brake pedal height (from asphalt seat)		161.5 – 171.5 mm (6.358 – 6.752 in.)
Brake pedal free play		1 – 6 mm (0.04 – 0.24 in.)
Brake pedal reserve distance at 490 N (590 kgf, 110.2 lbf)		More than 95 mm (3.74 in.)
Brake booster push rod to piston clearance (w/ SST)		0.15 ± 0.125 mm (0.0059 ± 0.00492 in.)
Front brake pad thickness	STD	11.5 mm (0.453 in.)
	Minimum	1.0 mm (0.039 in.)
Front brake disc thickness	STD	28.0 mm (1.102 in.)
	Minimum	26.0 mm (1.024 in.)
Front brake disc runout	Maximum	0.07 mm (0.0028 in.)
Rear brake drum inside diameter	STD	295.0 mm (11.614 in.)
	Maximum	297.0 mm (11.693 in.)
Rear brake shoe lining thickness	STD	6.0 mm (0.236 in.)
	Minimum	1.0 mm (0.039 in.)
Rear brake drum to shoe clearance		0.5 mm (0.020 in.)
Parking brake pedal travel at 294 N (30 kgf, 66 lbf)		6 – 9 clicks
Parking brake lever travel at 196 N (20 kgf, 44 lbf)		6 – 14 clicks
Stop light switch clearance		0.5 – 2.4 mm (0.020 – 0.094 in.)

SS085–02

TORQUE SPECIFICATION

Part tightened	N·m	kgf·cm	ft·lbf
Master cylinder x Piston stopper bolt	10	100	7
Master cylinder x Reservoir	1.8	18	16 in.·lbf
Master cylinder x Booster	13	130	9
Brake line union nut	15	155	11
Front disc brake caliper x Steering knuckle	123	1,250	90
Rear drum brake wheel cylinder x Baking plate	10	100	7
Parking brake bellcrank bracket x Baking plate	13	130	9
LSP & BV x LSP & BV bracket	13	130	9
LSP & BV bracket x Load sensing spring assembly	18	185	13
Load sensing spring assembly x Shackle No. 1	18	185	13
Shackle No. 1 x Shackle No. 2	13	130	9
Shackle No. 2 x Shackle bracket	13	130	9
LSP & BV bracket x Frame	29	300	22
Shackle bracket x Rear axle housing	29	300	22
ABS actuator bracket x ABS actuator	8.0	82	71 in.·lbf
ABS actuator x ECU	4.4	45	39 in.·lbf
ABS actuator bracket x Body	19	195	14
Speed sensor installation bolt	8.0	82	71 in.·lbf
Front speed sensor harness x Steering knuckle	8.0	82	71 in.·lbf
Front speed sensor harness x Upper arm	8.0	82	71 in.·lbf
Front speed sensor harness x Coil support	8.0	82	71 in.·lbf
Rear speed sensor harness x Rear axle housing	13	130	9
Rear speed sensor harness x Fuel tank	13	130	9

STEERING

SS08W–03

SERVICE DATA

DRIVE BELT (5VZ–FE)		
Drive belt tension	New belt	135–180 lbf
Drive belt tension	Used belt	85–120 lbf
POWER STEERING FLUID		
Oil level rise	Maximum	5 mm (0.20 in.)
Oil pressure at idle speed with valve closed	Minimum	8,336 kPa (85 kgf/cm^2, 1,209 psi)
STEERING WHEEL		
Steering wheel freeplay	Maximum	30 mm (1.18 in.)
Steering effort at idle speed	Reference:	4.9 N·m (50 kgf·cm, 43 in.·lbf)
PS VANE PUMP		
Pump shaft and front housing bushing oil clearance	STD	0.03–0.05 mm (0.0012–0.0020 in.)
Pump shaft and front housing bushing oil clearance	Maximum	0.07 mm (0.0028 in.)
Vane plate height	Minimum	8.6 mm (0.339 in.)
Vane plate thickness	Minimum	1.397 mm (0.0550 in.)
Vane plate length	Minimum	14.991 mm (0.5902 in.)
Vane plate and pump rotor groove clearance	Maximum	0.033 mm (0.0013 in.)
Vane plate length	Pump rotor and cam ring mark	
	None	14.999–15.001 mm (0.59051–0.59059 in.)
	1	14.997–14.999 mm (0.59043–0.59051 in.)
	2	14.995–14.997 mm (0.59035–0.59043 in.)
	3	14.993–14.995 mm (0.59027–0.59035 in.)
	4	14.991–14.993 mm (0.59020–0.59027 in.)
Flow control valve spring length	Minimum	33.2 mm (1.307 in.)
Pump rotating torque	Maximum	0.28 N·m (2.8 kgf·cm, 2.4 in.·lbf) or less
PS GEAR		
Steering rack runout	Maximum	0.03 mm (0.0118 in.)
Total preload	Turning	1.0–1.45 N·m (10–10.45 kgf·cm, 8.7–12.6 in.·lbf)

SS08X–03

TORQUE SPECIFICATION

Part tightened		N·m	kgf·cm	ft·lbf
STEERING COLUMN				
Steering wheel pad set screw (Torx screw)		8.8	90	78 in.·lbf
Steering wheel set nut		50	500	35
Control valve shaft x No. 2 intermediate shaft assembly		35	360	26
No. 2 intermediate shaft assembly x No. 2 universal joint assembly		35	360	26
No. 2 universal joint assembly x Main shaft assembly		35	360	26
Steering column assembly set nut		26	260	19
Column hole cover set bolt		8.0	82	71 in.·lbf
Shift lever set bolt	A/T	18	180	13
Shift lever housing x Column housing support	A/T	12	120	9
Non–tilt steering column:				
Turn signal bracket x Column upper tube		7.5	75	65 in.·lbf
Column upper tube x Column tube assembly		19	195	14
Tilt steering column:				
Turn signal bracket x Steering column housing		7.5	75	65 in.·lbf
Column housing support x Column tube assembly		19	195	14
PS VANE PUMP (5VZ–FE)				
Union bolt x Pressure feed tube		46.5	475	34
Pressure port union x Pump housing		83	850	61
Bracket x Pump assembly		44	440	32
Oil reservoir set bolt	Front	13	130	9
	Rear	24	240	17
Front housing x Rear housing		24	240	17
Vane pump assembly with bracket set bolt and nut		44	450	33
Oil pressure switch x Pressure feed tube		20.6	210	15
PS VANE PUMP (2UZ–FE)				
Union bolt x Pressure feed tube		46.5	475	34
PS vane pump assembly set stud bolt		22	220	16
PS vane pump assembly set bolt and nut		44	450	33
Suction port union set bolt		13	130	9
Pressure port union		83	850	61
Front housing x Rear housing		24	240	17
PS GEAR				
Turn pressure tube union nut		12 (15)	117 (150)	9 (11)
Tie rod end lock nut		55	560	41
Rack x Rack end		76 (103)	770 (1,050)	56 (76)
Rack guide spring cap lock nut		51 (69)	520 (700)	38 (51)
Rack housing cap		59	600	43
Self–locking nut		30	300	22
Control valve housing set bolt		18	185	13
PS gear assembly set bolt		165	1,700	123
PS gear assembly set bolt and nut		130	1,350	96
Bracket x Body	Bolt and nut	165	1,700	123

Bracket x Body Stud bolt	20	200	15
Pressure feed and return tubes x Control valve housing	32 (25)	326 (250)	27 (18)
No. 2 intermediate shaft assembly x No. 2 universal joint assembly	35	360	26
Control valve shaft x No. 2 intermediate shaft assembly	35	360	26
Tie rod end x Lower arm	91	930	67

( ): For use without SST

SUPPLEMENTAL RESTRAINT SYSTEM

SS08D–03

TORQUE SPECIFICATION

Part tightened	N·m	kgf·cm	ft·lbf
Steering wheel	50	500	35
Steering wheel pad	8.8	90	78 in.·lbf
Front passenger airbag assembly x Instrument panel	5.0	51	44 in.·lbf
Front passenger airbag assembly x Instrument panel reinforcement	20	205	15
Airbag sensor assembly	20	205	15
Front airbag sensor x Body	20	205	15

BODY ELECTRICAL

SS03A–04

SERVICE DATA

SPEEDOMETER	Resistance (Ω)
A – B	160
C – D	160
SPEEDOMETER (On–vehicle)	
USA:	
Standard indication (mph)	Allowable range (mph)
20	19 – 22
40	39 – 42.5
60	59.5 – 63.5
80	789.5 – 84
100	100 – 105
CANADA:	
Standard indication (km/h)	Allowable range (km/h)
20	18 – 23
40	40 – 44
60	60 – 64.5
80	80 – 85
100	100 – 105
120	120 – 125.5
140	140 – 146
160	160 – 167
TACHOMETER (On–vehicle) / DC 13.5 V 25˚C at (77˚F)	
Standard indication	Allowable range
700	630 – 770
1,000	900 – 1,100
2,000	1,875 – 2,125
3,000	2,850 – 3,150
4,000	3,850 – 4,150
5,000	4,850 – 5,150
6,000	5,820 – 6,180
TACHOMETER	Resistance (Ω)
A – B	140 – 185
C – D	130 – 175
VOLT GAUGE	Resistance (Ω)
A – B	Approx. 347.0
FUEL RECEIVER GAUGE (w/ Tachometer)	Resistance (Ω)
A – B	Approx. 83
A – C	Approx. 268
B – C	Approx. 160
FUEL RECEIVER GAUGE (w/o Tachometer)	Resistance (Ω)
A – B	Approx. 83
A – C	Approx. 268
B – C	Approx. 160

FUEL SENDER GAUGE	
Float position mm (in.)	Resistance (Ω)
F: Approx. –43.5 (–1.71) ± 2 (0.12)	Approx. 3.0
1/2: Approx.70.8 (2.79)	Approx. 32.5
E: Approx. –178 (–7.01) ± 2 (0.12)	Approx. 110.0
ENGINE COOLANT TEMPERATURE RECEIVER GAUGE (w/ Tachometer)	Resistance (Ω)
A – B	Approx. 55.9
A – C	Approx. 136
B – C	Approx. 211
ENGINE COOLANT TEMPERATURE RECEIVER GAUGE (w/o Tachometer)	Resistance (Ω)
A – B	Approx. 54.5
A – C	Approx. 139
B – C	Approx. 214
ENGINE COOLANT TEMPERATURE SENDER GAUGE	
Temperature ˚C (˚F)	Resistance (Ω)
50 (122.0)	160 – 240
120 (248.0)	17.1 – 21.2
OIL PRESSURE RECEIVER GAUGE	
A – B	Approx. 25.0 Ω

BODY

TORQUE SPECIFICATION

SS13G–04

Part tightened	N·m	kgf·cm	ft·lbf
FRONT BUMPER			
Steel bumper type:			
Front bumper arm x Body	58	590	43
Front bumper reinforcement x Body	50	510	37
Front bumper x Front bumper side mounting bracket	4.9	50	43 in.·lbf
Front bumper cover side mounting bracket x Front bumper arm	12	120	9
Front bumper cover x Front balance panel	4.9	50	43 in.·lbf
Resin bumper type:			
Front bumper reinforcement x Body	50	510	37
REAR BUMPER			
Rear bumper arm x Body	80	810	59
Rear bumper No. 2 reinforcement x Rear bumper arm	80	810	59
Rear bumper bar x Rear bumper No. 2 reinforcement	45	459	33
Rear bumper bar x Rear bumper reinforcement	29	310	22
w/ Towing hitch:			
Rear bumper reinforcement x Body	100	1020	74
Receiver hitch bracket x Rear bumper reinforcement	160	1632	118
HOOD			
Hood hinge x Hood	13	133	10
Hood lock x Body	7.8	80	69 in.·lbf
HOOD SUPPORT			
Hood support x Hood	22	224	16
Hood support x Body	22	224	16
FRONT DOOR			
Door hinge x Body	23	235	17
Door hinge x Door panel	23	235	17
Door check x Body	27	275	20
Door check x Door panel	5.0	51	44 in.·lbf
Door striker x Body	23	235	17
Outside handle x Door panel	5.5	56	49 in.·lbf
Door lock x Door panel Torx screw	5.0	51	44 in.·lbf
w/ Power door lock:			
Door lock x Door panel Bolt	5.5	56	49 in.·lbf
Window regulator x Door panel Bolt	5.0	51	44 in.·lbf
Nut	5.0	51	44 in.·lbf
Door glass x Window regulator	5.0	51	44 in.·lbf
Outside rear view mirror x Door panel	8.0	82	71 in.·lbf
ACCESS DOOR			
Door hinge x Body	23	235	17
Door hinge x Door panel	23	235	17
Door check x Body	27	275	20
Door check x Door panel	5.0	51	44 in.·lbf

Part tightened	N·m	kgf·cm	ft·lbf
Cancel lever x Door panel	5.0	51	44 in.·lbf
Outside handle x Door panel	5.5	56	49 in.·lbf
Upper door lock x Door panel	13	133	10
Lower door lock x Door panel	5.0	51	44 in.·lbf
Door controller x Door panel	13	133	10
FRONT WIPER AND WASHER			
Wiper link x Body	5.4	55	48 in.·lbf
Wiper motor x Wiper link	5.4	55	48 in.·lbf
Wiper arm x Wiper link	20	204	15
WHEEL OPENING MOULDING			
Resin bumper type:			
Front bumper extension x Front bumper cover	5.0	51	44 in.·lbf
BACK WINDOW GLASS			
Power slide type:			
Back window regulator assembly x Body	5.5	56	49 in.·lbf
Tether anchor bracket x Body	20	200	15
INSTRUMENT PANEL			
Front passenger airbag assembly x Instrument panel reinforcement M8	20	204	15
Front passenger airbag assembly x Instrument panel	5.0	51	44 in.·lbf
TAIL GATE			
Tail gate hinge x Tail gate	17	178	13
Tail gate x Body	17	178	13
Tail gate shaft x Tail gate	26	270	20
Tail gate cable x Body	26	270	20
Tail gate lock striker x Body	13	133	10
Tail gate handle x Tail gate	5.0	51	44 in.·lbf
Tail gate lock x Tail gate	13	133	10
FRONT SEAT			
Separate type:			
Armrest x Seatback assembly	37	375	27
Seatback assembly x Seat adjuster	43	440	32
Seat cushion assembly x Seat adjuster	19	195	14
Front seat x Body	37	375	27
Bench type:			
Seat cushion assembly x Seat adjuster	18	185	13
Seatback frame x Armrest	18	185	13
Seatback assembly x Seat cushion assembly	39	400	29
Spacer x Seat cushion frame	47	479	35
Front seat x Body	37	375	27
Split type, Driver's side:			
Seatback assembly x Seat adjuster	43	440	32
Seat cushion assembly x Seat adjuster	19	195	14
Front seat x Body	37	375	27
Split type, Passenger's side:			
Seatback assembly x Seat adjuster	43	440	32

Part tightened		N·m	kgf·cm	ft·lbf
Center armrest lock x Front seatback bracket		21	215	16
Seatback bracket assembly x Center armrest	Bolt: 8 mm	5.4	55	48 in.·lbf
	Bolt: 18 mm and 25 mm	20	204	15
Center armrest x Seat adjuster		21	215	16
Reclining connecting rod x Seat adjuster		39	398	29
Seat cushion assembly x Seat adjuster	Bolt A	19	195	14
	Bolt B	20	204	15
	Bolt C	21	215	16
Front seat x Body		37	375	27
REAR SEAT				
Center armrest hinge x Center armrest		5.0	51	44 in.·lbf
Center armrest x Seatback assembly		21	215	16
Seatback assembly x Seatback lock		21	215	16
Seat cushion hinge plate x Seatback assembly		21	215	16
Seat cushion assembly x Seatback lock		21	215	16
Rear seat x Body		19	195	14
SEAT BELT				
Standard cab:				
Adjustable anchor x Body		42	430	31
Front seat outer belt shoulder anchor x Body		42	430	31
Front seat outer belt floor anchor x Body		42	430	31
Front seat outer belt retractor x Body	Upper bolt	8.3	85	74 in.·lbf
	Lower bolt	42	430	31
Front seat inner belt x Body		42	430	31
Front seat inner belt x Front seat		42	430	31
Front seat inner and center belt x Body		42	430	31
Front seat inner and center belt x Front seat		42	430	31
Access cab:				
Front seat outer belt shoulder anchor x Body		42	430	31
Front seat outer belt floor anchor x Body		42	430	31
Front seat outer belt retractor x ELR bracket		42	430	31
Front seat inner belt x Body		42	430	31
Front seat inner belt x Front seat		42	430	31
Front seat inner and center belt x Body		42	430	31
Front seat inner and center belt x Front seat		42	430	31
Rear seat outer belt shoulder anchor x Body		42	430	31
Rear seat outer belt floor anchor x Body		42	430	31
Rear seat outer belt retractor x Body		42	430	31
Rear seat inner belt x Body		42	430	31
Rear seat inner and center belt x Body		42	430	31

AIR CONDITIONING

SS08B–02

SERVICE DATA

Refrigerant charge volume	600 ± 50 g (21.16 ± 1.76 oz.)
Drive belt tension	–
New belt	160 ± 25 lbf
Used belt	100 ± 20 lbf
Idle–up speed (5VZ–FE)	–
Magnetic clutch not engaged	700 ± 50 rpm
Magnetic clutch engaged	850 ± 50 rpm
Idle–up speed (2UZ–FE)	–
Magnetic clutch not engaged	750 ± 50 rpm
Magnetic clutch engaged	800 ± 50 rpm
Magnetic clutch clearance	0.5 ± 0.15 mm (0.020 ± 0.0059 in.)

SS08C–02

TORQUE SPECIFICATION

Part tightened	N·m	kgf·cm	ft·lbf
Compressor x Compressor bracket	25	250	18
Compressor bracket x Engine	37	375	27
Idle pulley lock nut	39	400	29
Compressor x Discharge hose	10	100	7
Compressor x Suction hose	10	100	7
Cooling unit x Suction tube	32	330	24
Expansion valve x Evaporator	5.4	55	48 in.·lbf
Receiver x Liquied tube	5.4	55	48 in.·lbf
Condenser x Liquid tube	10	100	7
Condenser x Discharge hose	10	100	7
Pressure switch x Liquied tube	10	100	7
Pressure plate x Compressor	13.2	135	9

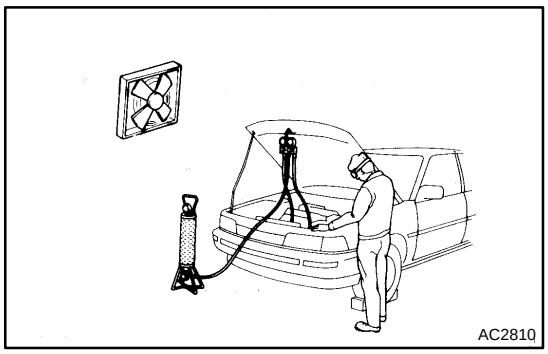

AIR CONDITIONING SYSTEM

AC0C1–04

PRECAUTION

1. DO NOT HANDLE REFRIGERANT IN AN ENCLOSED AREA OR WEAR EYE PROTECTION

2. ALWAYS WEAR EYE PROTECTION

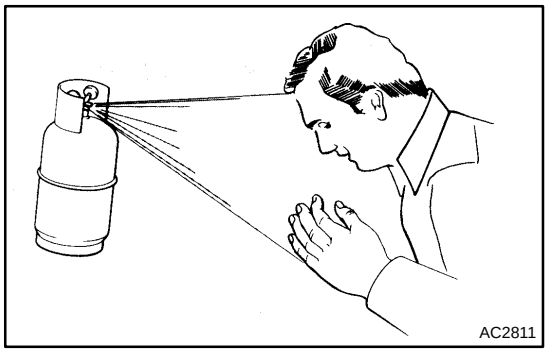

3. BE CAREFUL NOT TO GET LIQUID REFRIGERANT IN YOUR EYES OR ON YOUR SKIN

If liquid refrigerant gets in your eyes or on your skin.

(a) Wash the area with lots of cool water.

CAUTION:

Do not rub your eyes or skin.

(b) Apply clean petroleum jelly to the skin.

(c) Go immediately to a physician or hospital for professional treatment.

4. NEVER HEAT CONTAINER OR EXPOSE IT TO NAKED FLAME

5. BE CAREFUL NOT TO DROP CONTAINER AND NOT TO APPLY PHYSICAL SHOCKS TO IT

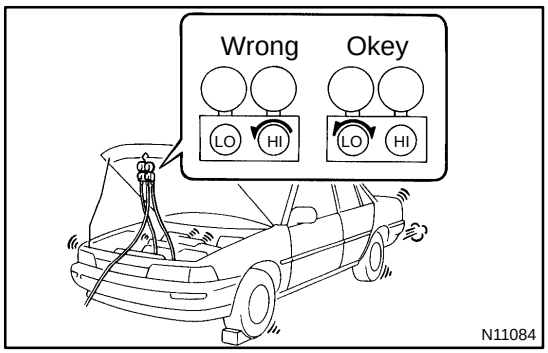

6. DO NOT OPERATE COMPRESSOR WITHOUT ENOUGH REFRIGERANT IN REFRIGERATION SYSTEM

If there is not enough refrigerant in the refrigerant system oil lubrication will be insufficient and compressor burnout may occur, so that care to avoid this, necessary care should be taken.

7. DO NOT OPEN PRESSURE MANIFOLD VALVE WHILE COMPRESSOR IS OPERATE

If the high pressure valve is opened, refrigerant flows in the reverse direction and could cause the charging cylinder to rupture, so open and close the only low pressure valve.

8. BE CAREFUL NOT TO OVERCHARGE SYSTEM WITH REFRIGERANT

If refrigerant is overcharged, it causes problems such as insufficient cooling, poor fuel economy, engine overheating etc.

9. SUPPLEMENTAL RESTRAINT SYSTEM (SRS)

The TOYOTA TUNDRA is equipped with an SRS (Supplemental Restraint System) such as the driver and front passenger airbag. Failure to carry out service operation in the correct sequence could cause the SRS to unexpectedly deploy during servicing, possibly leading to a serious accident. Before servicing (including removal or installation of parts, inspection or replacement), be sure to read the precautionary notices tn the RS section.

AC22F–02

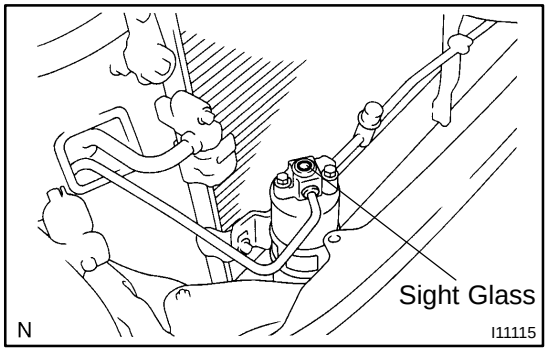

ON–VEHICLE INSPECTION

1. INSPECT REFRIGERANT VOLUME

Observe the sight glass on the liquid tube.

Test conditions:

- Running engine at 1,500 rpm
- Blower speed control switch at ”HI” position
- A/C switch ON
- Temperature control dial at ”COOL” position
- Fully open the doors

Item	Symptom	Amount of refrigerant	Remedy
1	Bubbles present in sight glass	Insufficient*	(1) Check for gas leakage with gas leak detector and repair if necessary (2) Add refrigerant until bubbles disappear
2	No bubbles present in sight glass	None, sufficient or too much	Refer item 3 and 4
3	No temperature difference between compressor inlet and outlet	Empty or nearly empty	(1) Check for gas leakage with gas leak detector and repair if necessary (2) Add refrigerant until bubbles disappear
4	Temperature between compressor inlet and outlet is noticeably different	Correct or too much	Refer to items 5 and 6
5	Immediately after air conditioning is turned off, refrigerant in sight glass stays clear	Too much	(1) Discharge refrigerant (2) Evacuate air and charge proper amount or purified refrigerant
6	When air conditioning is turned off, refrigerant foams and then stays clear	Correct	–

*: Bubbles in the sight glass with ambient temperatures higher than usual can be considered normal if cooling is sufficient.

2. INSPECT REFRIGERANT PRESSURE WITH MANIFOLD GAUGE SET

This is a method in witch the trouble is located by using a manifold gauge set. Read the manifold gauge pressure when the these conditions are established.

Test conditions:

- ▲ Temperature at the air inlet with the switch set at RECURC is 30 – 35 °C (86 – 95 °F)
- ▲ Engine running at 1500 rpm
- ▲ Blower speed control switch at "HI" position
- ▲ Temperature control dial at "COOL" position

HINT:

It should be noted that the gauge indications may vary slightly due to ambient temperature conditions.

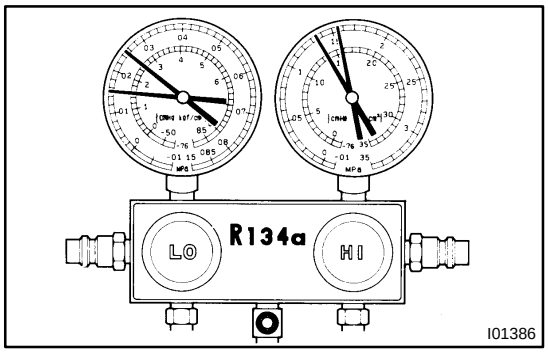

(1) Normally functioning refrigeration system.

Gauge reading:

Low pressure side:

0.15 – 0.25 MPa (1.5 – 2.5 kgf/cm^2)

High pressure side:

1.37 – 1.57 MPa (14 – 16 kgf/cm^2)

(2) Moisture present in refrigeration system.

Condition : Periodically cools and then fails to cool

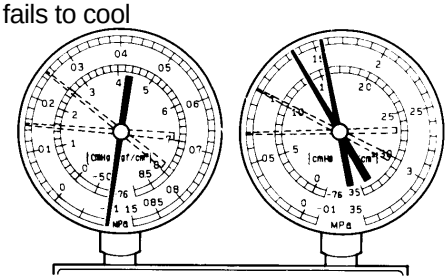

Symptom seen in refrigeration system	Probable cause	Diagnosis	Remedy
During operation, pressure on low pressure side sometimes become a vacuum and sometime normal	Moisture entered in refrigeration system freezes at expansion valve orifice and temporarily stops cycle, but normal state is restored after a time when the ice melts	▲Drier in oversaturected state ▲Moisture in refrigeration system freezes at expansion valve orifice and blocks circulation of refrigerant	(1) Replace receiver (2) Remove moisture in cycle through repeatedly evacuating air (3) Charge proper amount of new refrigerant

(3) Insufficient cooling

Condition: Insufficient cooling

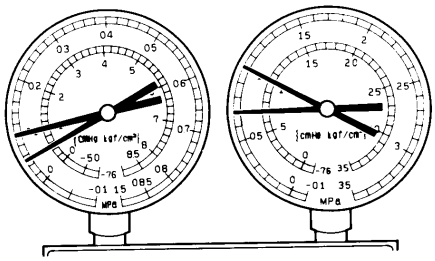

I01388

Symptom seen in refrigeration system	Probable cause	Diagnosis	Remedy
▲Pressure low on both low and high pressure sides ▲Bubbles seen in sight glass continuously ▲Insufficient cooling performance	Gas leakage at some place in refrigeration system	▲Insufficient refrigerant in system ▲Refrigerant leaking	(1) Check for gas leakage with gas leak detector and repair if necessary (2) Charge proper amount of refrigerant (3) If indicated pressure value is near 0 when connected to gauge, create the vacuum after inspecting and repairing the location of the leak

(4) Poor circulation of refrigerant

Condition: Insufficient cooling

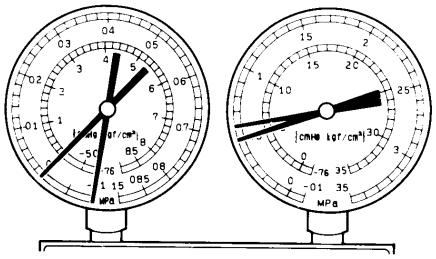

I01389

Symptom seen in refrigeration system	Probable cause	Diagnosis	Remedy
▲Pressure low in both low and high pressure sides ▲Frost on tube from receiver to unit	Refrigerant flow obstructed by dirt in receiver	Receiver clogged	Replace receiver

(5) Refrigerant does not circulate

Condition: Does not cool (Cools from time to time in some cases)

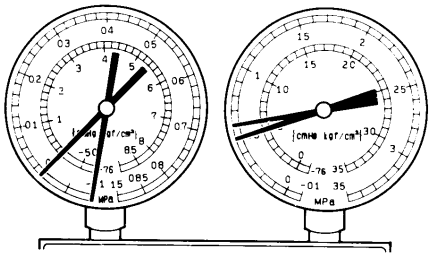

I01449

Symptom seen in refrigeration system	Probable cause	Diagnosis	Remedy
▲Vacuum indicated on low pressure side, very low pressure indicated on high pressure side ▲Frost or dew seen on piping before and after receiver/ drier or expansion valve	▲Refrigerant flow obstructed by moisture or dirt in refrigeration system ▲Refrigerant flow obstructed by gas leakage from expansion valve	Refrigerant does not circulate	(1) Check expansion valve (2) Clean out dirt in expansion valve by blowing with air (3) Replace receiver (4) Evacuate air and charge new refrigerant to proper amount (5) For gas leakage from expansion valve, replace expansion valve

(6) Refrigerant overcharged or insufficient cooling of condenser

Condition: Insufficient cooling

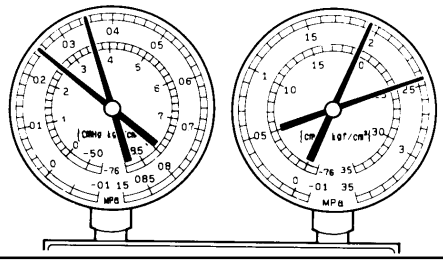

I01390

Symptom seen in refrigeration system	Probable cause	Diagnosis	Remedy
▲Pressure too high on both low and high pressure sides ▲No sir bubbles seen through the sight glass even when the engine rpm is lowered	▲Unable to develop sufficient performance due to excessive ▲Insufficient cooling of condenser	▲Excessive refrigerant in cycle→refrigerant overcharged ▲Condenser cooling insufficient→condenser fins clogged of cooling fan faulty	(1) Clean condenser (2) Check cooling fan with fluid coupling operation (3) If (1) and (2) are in normal state, check amount of refrigerant Charge proper amount of refrigerant

(7) Air present in refrigeration system

Condition: Insufficient cooling

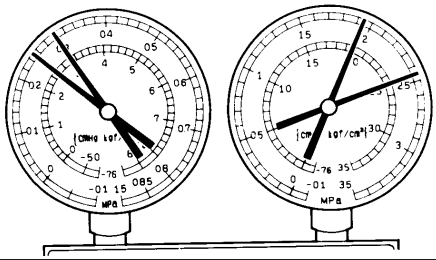

NOTE : These gauge indications are shown when the refrigeration system has been opens and the refrigerant charged without vacuum purging.

I01392

Symptom seen in refrigeration system	Probable cause	Diagnosis	Remedy
▲Pressure too high on both low and high pressure sides ▲The low pressure piping hot to the touch ▲Bubbles seen in sight glass	Air entered in refrigeration system	▲Air present in refrigeration system ▲Insufficient vacuum purging	(1) Check compressor oil to see if it is see if it is dirty or insufficient (2) Evacuate air and charge new refrigerant

(8) Expansion valve improperly

Condition: Insufficient cooling

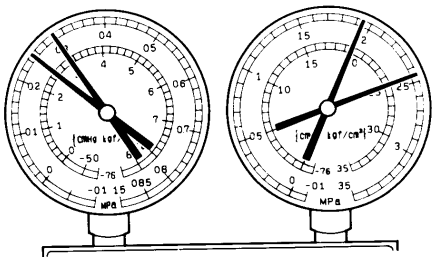

I01450

Symptom seen in refrigeration system	Probable cause	Diagnosis	Remedy
▲Pressure too high on both low and high pressure sides ▲Frost or large amount of dew on piping on low pressure side	Trouble in expansion valve	▲Excessive refrigerant in low pressure piping ▲Expansion valve opened too wide	Check expansion valve Replace if defective

(9) Defective compression compressor

Condition : Does not cool

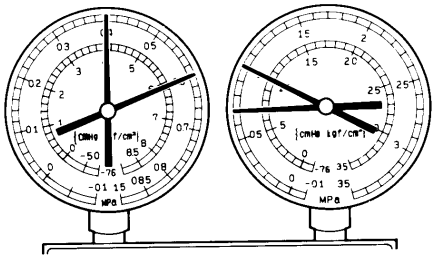

I01393

Symptom seen in refrigeration system	Probable cause	Diagnosis	Remedy
▲Pressure too high on low high pressure sides ▲Pressure too low to on high pressure side	Internal leak in compressor	▲Compression defective ▲Valve leaking or broken sliding parts	Repair or replace compressor

3. INSPECT IDLE–UP SPEED

(a) Warm up engine.

(b) Inspect idle–up speed when the these conditions are established.

- ▲ Warm up engine
- ▲ Blower speed control switch at ”HI” position
- ▲ A/C switch ON
- ▲ Temperature control dial at ”COOL” position

Magnetic clutch condition	Idle–up speed
5VZ–FE Engine	–
Magnetic clutch not engaged	700 ± 50 rpm
Magnetic clutch engaged	850 ± 50 rpm
2UZ–FE Engine	–
Magnetic clutch not engaged	750 ± 50 rpm
Magnetic clutch engaged	800 ± 50 rpm

If idle speed is not as specified, check Idle control system.

4. INSPECT FOR LEAKAGE OF REFRIGERANT

(a) Perform in these conditions:

- ▲ Stop engine.
- ▲ Secure good ventilation (If not the gas leak detector may react to volatile gases witch are not refrigerant, such as evaporated gasoline and exhaust gas.)
- ▲ Repeat the test 2 or 3 times.
- ▲ Make sure that there is some refrigerant remaining in the refrigeration system.
  When compressor is OFF: approx. 392 – 588 kPa (4 – 6 kgf/ cm^2, 57 – 85 psi)

(b) Bring the gas leak detector close to the drain hose before performing the test.

HINT:

- ▲ After the blower motor stopped, leave the cooling unit for more than 15 minutes.
- ▲ Expose the gas leak detector sensor the under the drain hose.
- ▲ When bring the gas leak detector close to the drain hose, make sure that the gas leak detector does not react to the volatile gases.

If such reaction is unavoidable, the vehicle must be lifted up.

(c) If gas leak is not detected on the drain hose, remove the blower resistor from the cooling unit. Then insert the gas leak detector sensor into the unit and perform the test.

(d) Disconnect the connector and leave the pressure switch for approx. 20 minutes. Then bring the gas leak detector close to the pressure switch and perform the test.

(e) Bring the gas leak detector close to the refrigerant lines and perform the test.

AC0C4–03

EVACUATING

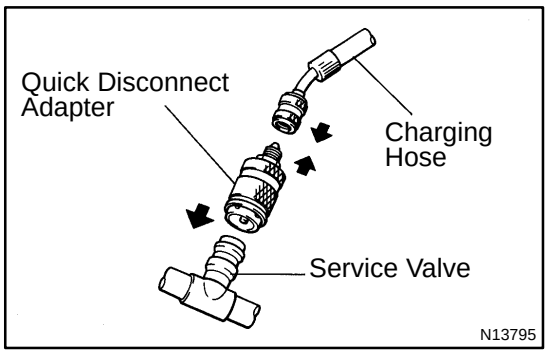

1. CONNECT QUICK DISCONNECT ADAPTER TO CHARGING HOSES

2. REMOVE CAPS FROM SERVICE VALVES ON REFRIGERANT LINES

3. SET ON MANIFOLD GAUGE SET

(a) Close both hand valves of manifold gauge set.

(b) Connect the quick disconnect adapters to the service valves.

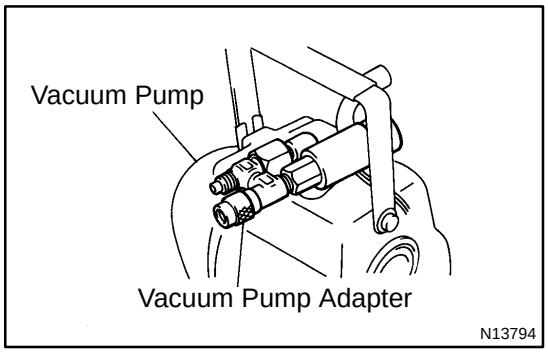

4. EVACUATE AIR FROM REFRIGERATION SYSTEM

(a) Connect the vacuum pump adapter to the vacuum pump.

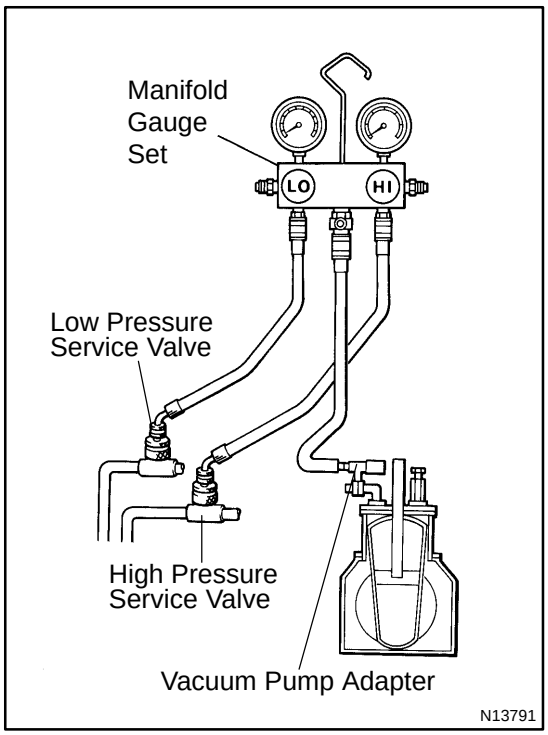

(b) Connect the center hose of the manifold gauge set to the vacuum pump adapter.

(c) Open both the high and low hand valves and run the vacuum pump.

(d) After 10 minutes or more, check that the low pressure gauge indicates 750 mmHg (30 in. Hg) or more.

HINT:

If the reading 750 mmHg (30 in. Hg) or more, close both hand valves of manifold gauge set and stop the vacuum pump.

Check the system for leaks and repair necessary.

(e) Close both the high and low hand valves and stop the vacuum pump.

(f) Leave the system in this condition for 5 minutes or more and check that there is no gauge indicator.

AC22G–02

CHARGING

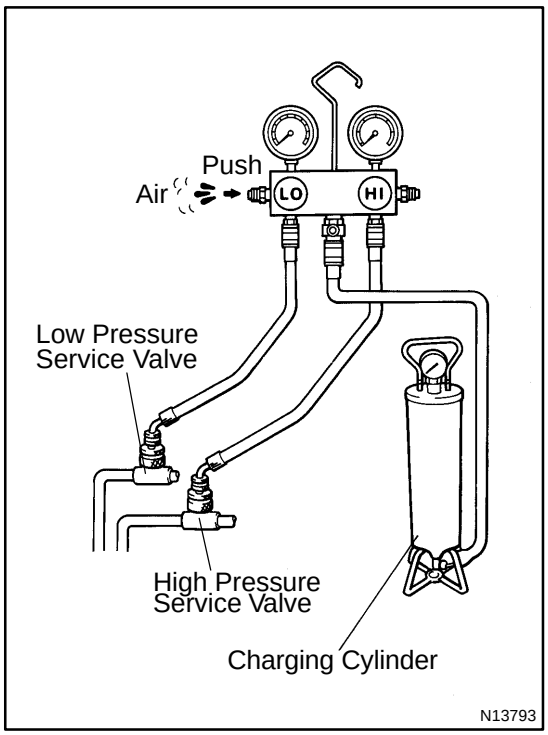

1. INSTALL CHARGING CYLINDER

HINT:

When handling the charging cylinder, always follow the directions given in the instruction manual.

(a) Charge the proper amount of refrigerant into the charging cylinder.

(b) Connect the center hose to the charging cylinder.

CAUTION:

Do not open both high and low hand valves of manifold gauge set.

(c) Open the valve of charging cylinder.

(d) Press the valve core on the side of manifold gauge and expel the air inside of the center hose.

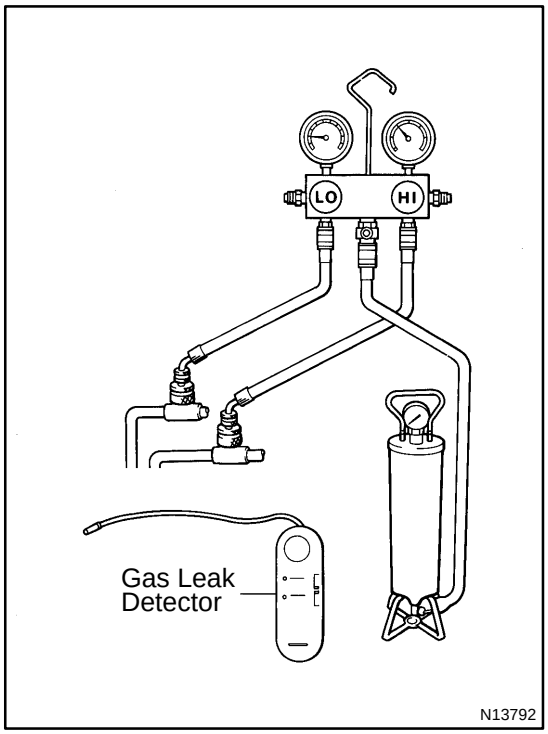

2. INSPECT REFRIGERATION SYSTEM FOR LEAKS

(a) Open the high pressure hand valve and charge refrigerant.

(b) When the low pressure gauge indicates 98 kPa (1 kgf/cm^2, 14 psi) close the high pressure hand valve.

(c) Using a gas leak detector, check the system for leakage.

CAUTION:

Use the refrigerant recovery/ recycling machine to recover the refrigerant whenever replacing parts.

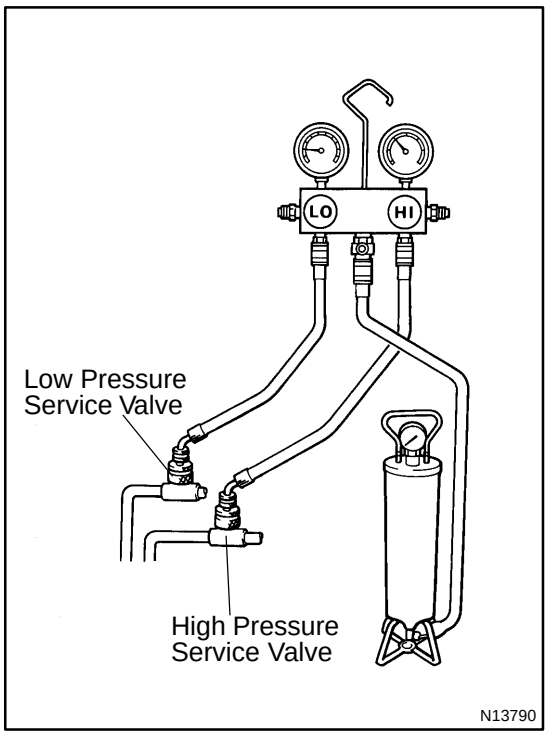

3. CHARGE REFRIGERANT INTO REFRIGERANT SYSTEM

If there is no leak after refrigerant leak check, charge the proper amount of refrigerant into refrigeration system.

CAUTION:

- **Never run the engine when charging the system through the high pressure side.**
- **Do not open the low pressure hand valve when the system is being charged with liquid refrigerant.**

(a) Open the high pressure hand valve fully.

(b) Charge specified amount of refrigerant, then close the high pressure hand valve.

HINT:

A fully charged system is indicated by the sight glass being free of any bubbles.

(c) Charge partially refrigeration system with refrigerant.

(1) Set vehicle in these condition:

- Running engine at 1,500 rpm
- Blower speed control set at ”HI”
- Temperature control set at ”MAX. COOL”
- Air inlet control set at ”RECIRC”
- Fully open doors (Sliding roof: closed)

(2) Open the low pressure hand valve.

CAUTION:

Do not open the high pressure hand valve.

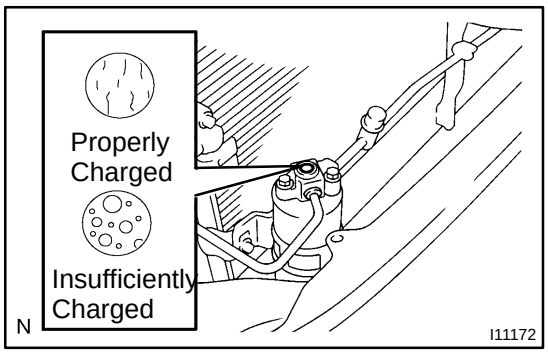

(d) Charge refrigerant until bubbles disappear and check the pressure on the gauge through the sight glass.

AC0C6–04

LOCATION

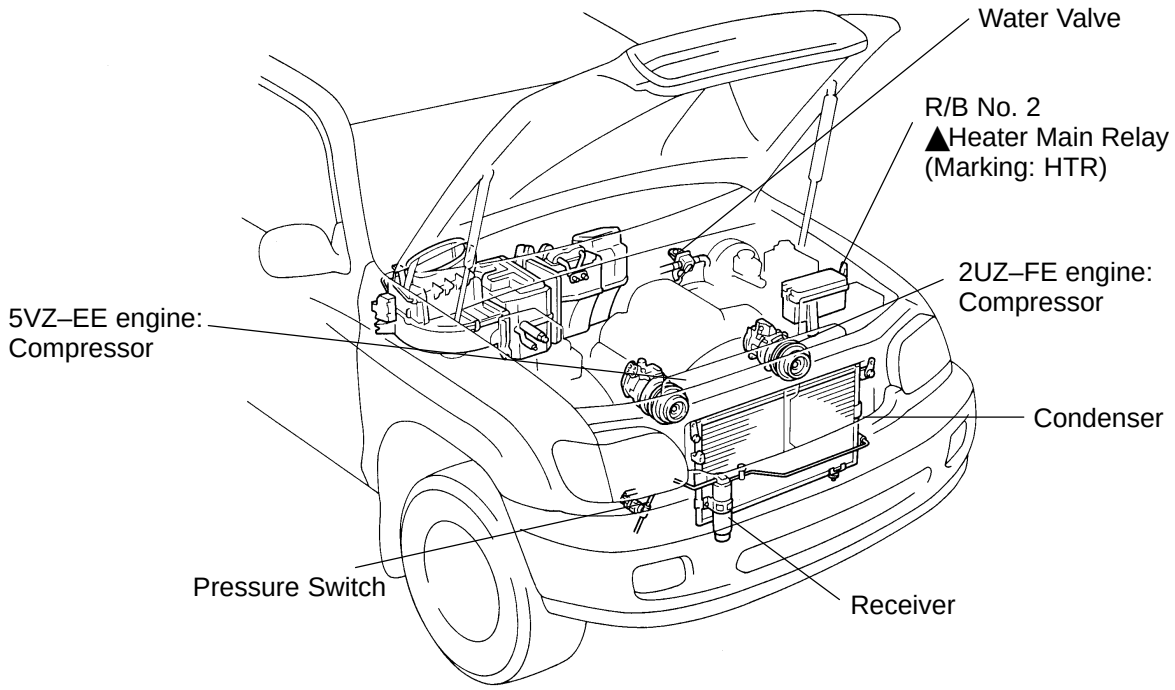

N

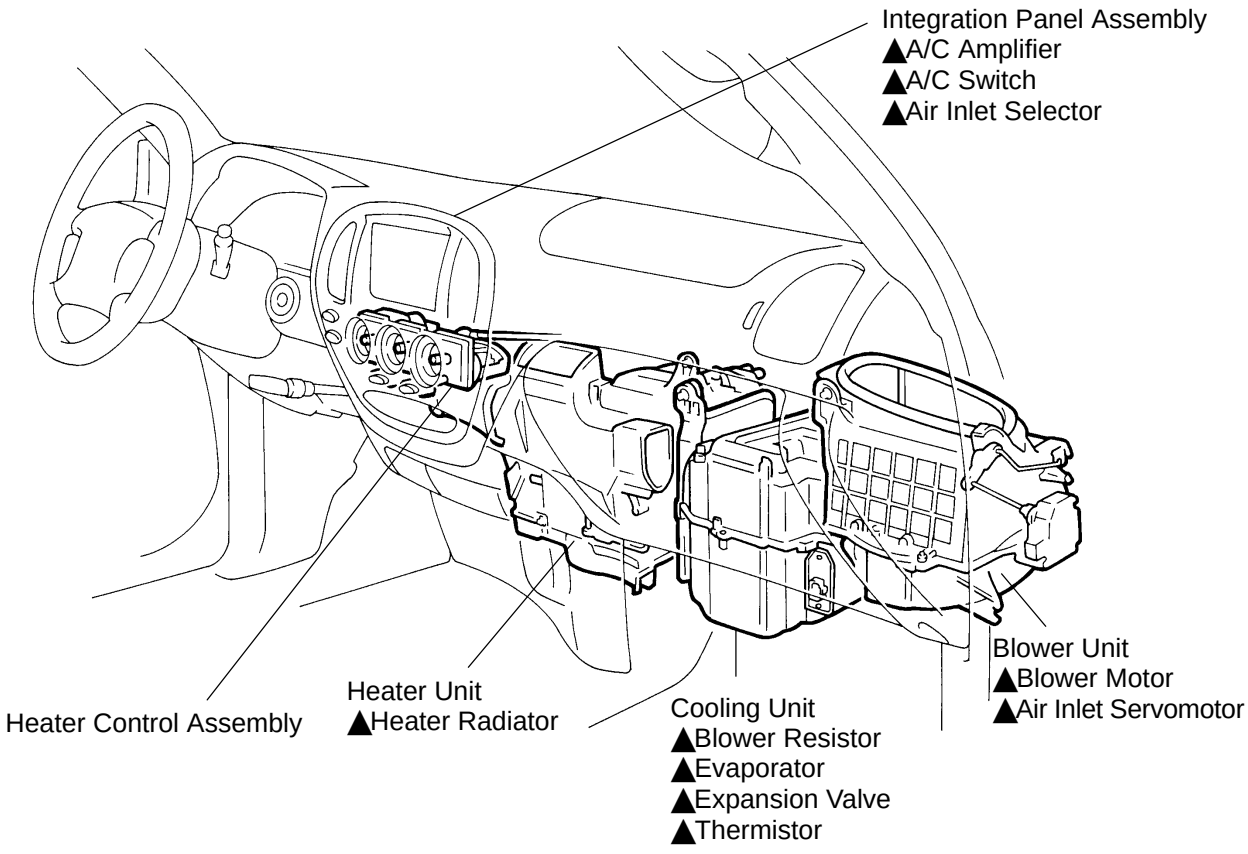

I11116
I11117

N

I11173

TROUBLESHOOTING

AC22H–04

PROBLEM SYMPTOMS TABLE

Use the table below to help you find the cause of the problem. The numbers indicate the priority of the likely cause of the problem. Check each part in order. If necessary, replace these parts.

Symptom	Suspect Area	See page
No blower operation	4. HTR Fuse	–
	5. Heater main relay	AC–70
	6. Blower motor	AC–65
	7. Blower resistor	AC–66
	8. Blower speed control switch	AC–86
	9. Wire harness	–
No air temperature control	1. Engine coolant volume	–
	2. Heater control assembly	AC–82
	3. Water valve	AC–62
No compressor operation	1. Refrigerant volume	AC–3
	2. A.C Fuse	–
	3. Magnetic clutch	AC–45
	4. Compressor	AC–45
	5. Pressure switch	AC–67
	6. Heater main relay	AC–70
	7. Blower speed control switch	AC–86
	8. A/C switch	AC–77
	9. Integration control and panel	AC–71
	10.Thermistor	AC–25
	11.Wire harness	–
Compressor operates intermittently	1. Refrigerant volume	AC–3
	2. Pressure switch	AC–67
	3. A/C switch	AC–77
	4. Thermistor	AC–25
	5. Wire harness	–
No cool air comes out	1. Refrigerant volume	AC–3
	2. Refrigerant pressure	AC–3
	3. Drive belt	AC–16
	4. Magnetic clutch	AC–45
	5. Compressor	AC–45
	6. Pressure switch	AC–67
	7. Thermistor	AC–25
	8. A/C switch	AC–77
	9. Integration control and panel	AC–71
	10.Heater control assembly	AC–82
	11.Wire harness	–
Cool air comes out only at high engine rpm	1. Refrigerant volume	AC–3
	2. Drive belt	AC–16
	3. Magnetic clutch	AC–45
	4. Compressor	AC–45
	5. Condenser	AC–58
	6. Receiver	AC–55
	7. Expansion valve	AC–25
	8. Evaporator	AC–30
	9. Thermistor	AC–25
	10.A/C switch	AC–77
	11.Wire harness	–

Insufficient cooling	1. Refrigerant volume 2. Drive belt 3. Magnetic clutch 4. Compressor 5. Condenser 6. Receiver 7. Expansion valve 8. Evaporator 9. Refrigerant lines 10. Pressure switch 11. Integration control and panel 12. Heater control assembly	AC–3 AC–16 AC–45 AC–45 AC–58 AC–55 AC–25 AC–30 AC–21 AC–67 AC–71 AC–82
No engine idle–up when A/C switch ON	1. Integration control and panel 2. Idle control system 3. Wire harness	AC–71 *1 DI–21 *2 DI–342 –
*2Binking of A/C indicator	1. Compressor 2. Drive belt 3. Compressor lock sensor 4. A/C amplifier	AC–45 AC–16 AC–45 AC–71
No warm air comes out	1. Engine coolant volume 2. Heater control assembly 3. Water valve 4. Heater radiator	– AC–82 AC–62 AC–36

*1: 5VZ–FE Engine
*2: 2UZ–FE Engine

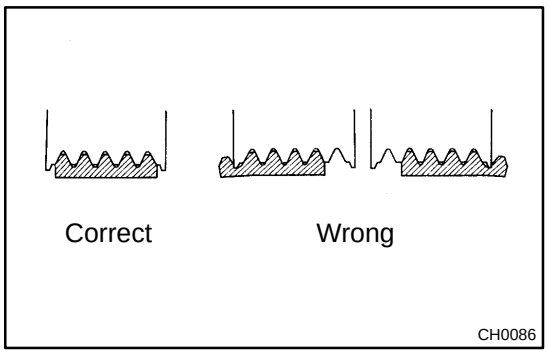

DRIVE BELT

AC26W–01

ON–VEHICLE INSPECTION

1. INSPECT DRIVE BELT'S INSTALLATION CONDITION

Check that the drive belt fits properly in the ribbed grooves.

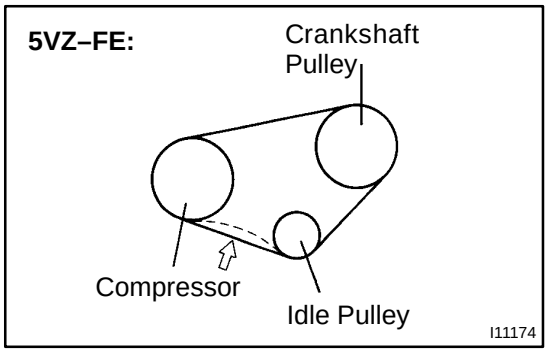

2. 5VZ–FE engine:
INSPECT DRIVE BELT TENSION

Using a belt tension gauge, check the drive belt tension.

Drive belt tension:
New belt 160 ± 25 lbf
Used belt 100 ± 20 lbf

HINT:

- ▲ "New belt" refers to a belt which has been used less than 5 minutes on a running engine.
- ▲ "Used belt" refers to a belt which has been used on a running engine for 5 minutes or more.
- ▲ After installing the drive belt, check that it fits properly in the ribbed grooves.

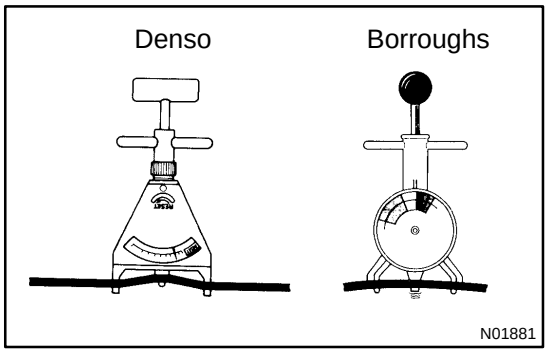

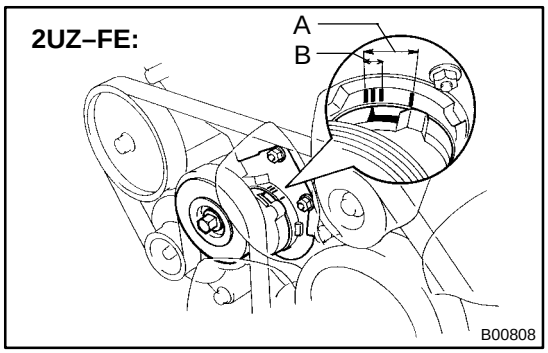

3. 2UZ–FE engine:
INSPECT DRIVE BELT TENSION

Check that the tension is within A range on the auto tensioner scale.

If the tension is not within the A range on the scale, replace the belt with a new one.

HINT:

When replacing the drive belt with a new one, the belt's tension should be within the B range on the belt tensioner scale.

AC26X–01

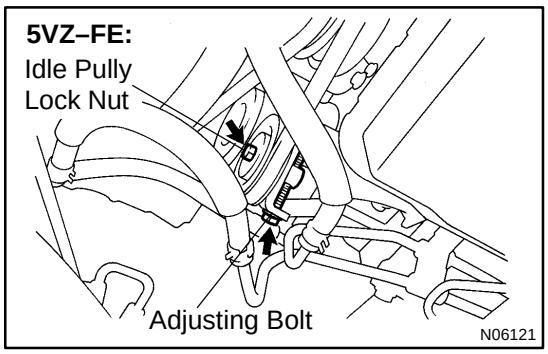

REMOVAL

1. 5VZ–FE engine:
REMOVE DRIVE BELT

(a) Remove the engine under cover.
(b) Loosen the idle pully lock nut.
(c) Loosen the drive belt tension by adjusting bolt and remove the dirve belt.

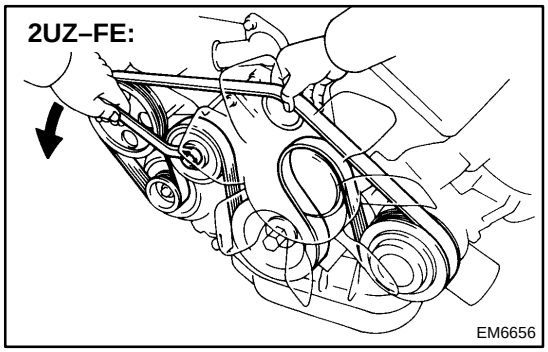

2. 2UZ–FE engine:
REMOVE DRIVE BELT

Loosen the drive belt tension by turning the drive belt tensioner counterclockwise, and remove the drive belt.

AC26Y–01

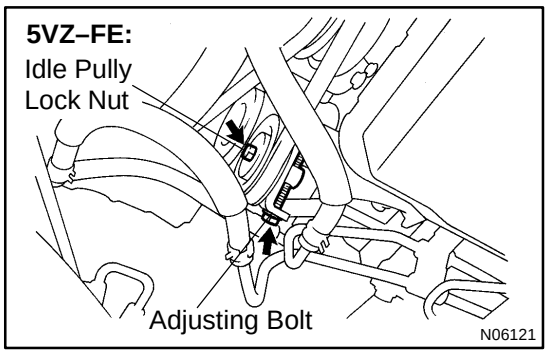

INSTALLATION

1. 5VZ–FE engine:
INSTALL DRIVE BELT

(a) Tighten the idle pulley lock nut temporally.
Torque: 2.5 N·m (25 kgf·cm, 22 in.·lbf)

(b) Install the drive belt.

(c) Apply drive belt tension by adjusting bolt.
Drive belt tension
New belt: 160 ± 25 lbf
Used belt: 100 ± 25 lbf

(d) Tighten the idle pulley lock nut.
Torque: 39 N·m (400 kgf·cm, 29 ft·lbf)

(e) Install the engine under cover.

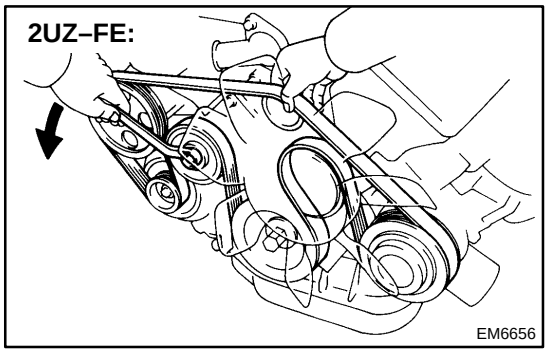

2. 2UZ–FE engine:
INSTALL DRIVE BELT

Turn the drive belt tensioner counterclockwise then install the drive belt.

5VZ–FE:

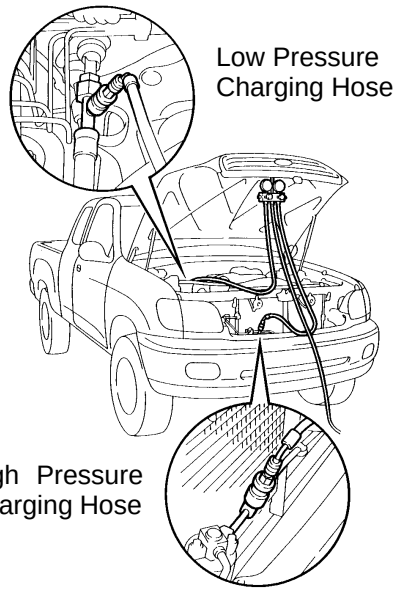

MANIFOLD GAUGE SET

AC26Z–01

SET ON

1. CONNECT CHARGE HOSE TO MANIFOLD GAUGE SET

Tighten the nuts by hand.

CAUTION:

Do not connect the wrong hoses.

2. CONNECT QUICK DISCONNECT ADAPTERS TO CHARGING HOSES

Tighten the nuts by hand.

3. CLOSE BOTH HAND VALVES OF MANIFOLD GAUGE SET

4. REMOVE CAPS FROM SERVICE VALVES ON REFRIGERANT LINE

2UZ–FE:

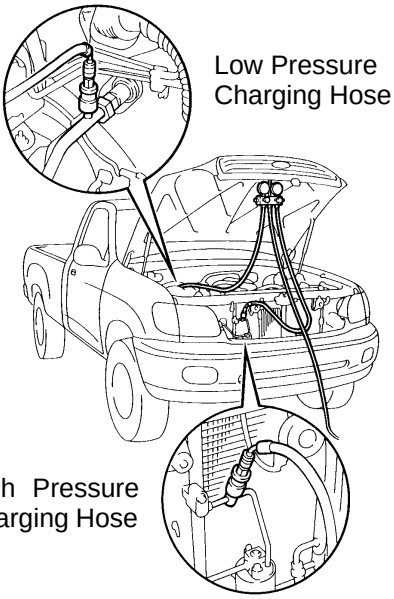

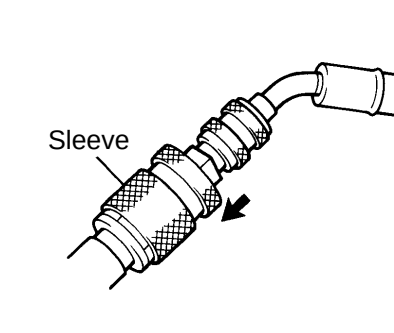

5. CONNECT QUICK DISCONNECT ADAPTERS TO SERVICE VALVES

HINT:

Push the quick disconnect adapter onto the service valve, then slide, then slide the sleeve of the quick disconnect adapter downward to lock it.

AC0CB–03

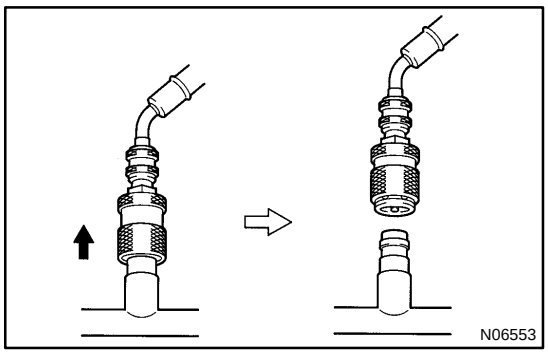

SET OFF

1. **CLOSE BOTH HAND VALVES OF MANIFOLD GAUGE SET**
2. **DISCONNECT QUICK DISCONNECT ADAPTERS FROM SERVICE VALVES ON REFRIGERANT LINE**

HINT:

Slide the sleeve of the quick disconnect adapter upward to unlock the adapter and remove it from the service valve.

3. **INSTALL CAPS TO SERVICE VALVES ON REFRIGERANT LINE**

REFRIGERANT LINE

AC0CC–01

ON–VEHICLE INSPECTION

1. INSPECTION HOSE AND TUBE CONNECTIONS FOR LOOSENESS

2. INSPECT HOSES AND TUBES FOR LEAKAGE

Using a gas leak detector, check for leakage of refrigerant.

AC270–01

LOCATION

5VZ–FE:

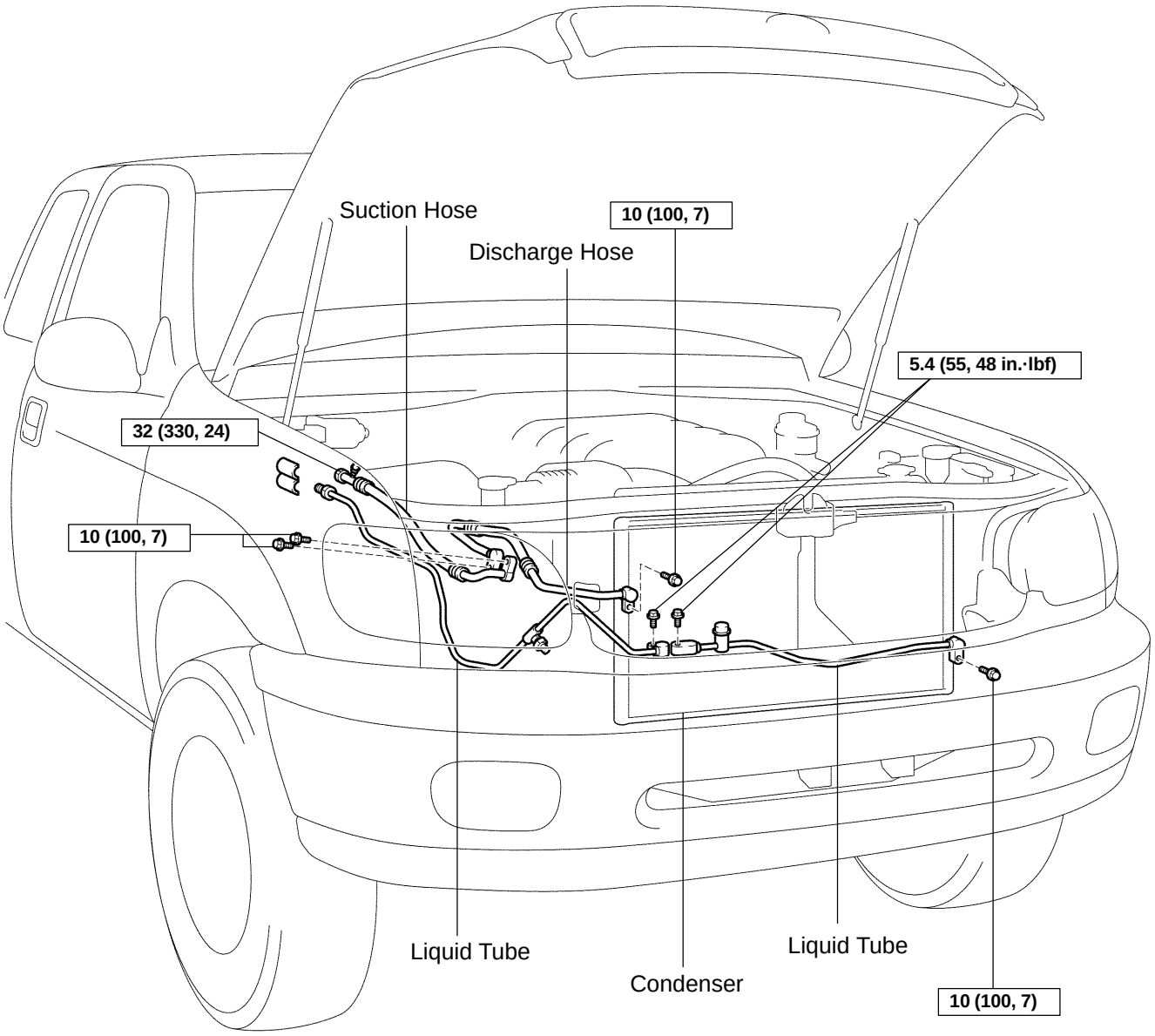

N·m (kgf·cm, ft·lbf) : Specified torque

▲ Non–reusable part

P

I11120

2UZ–FE:

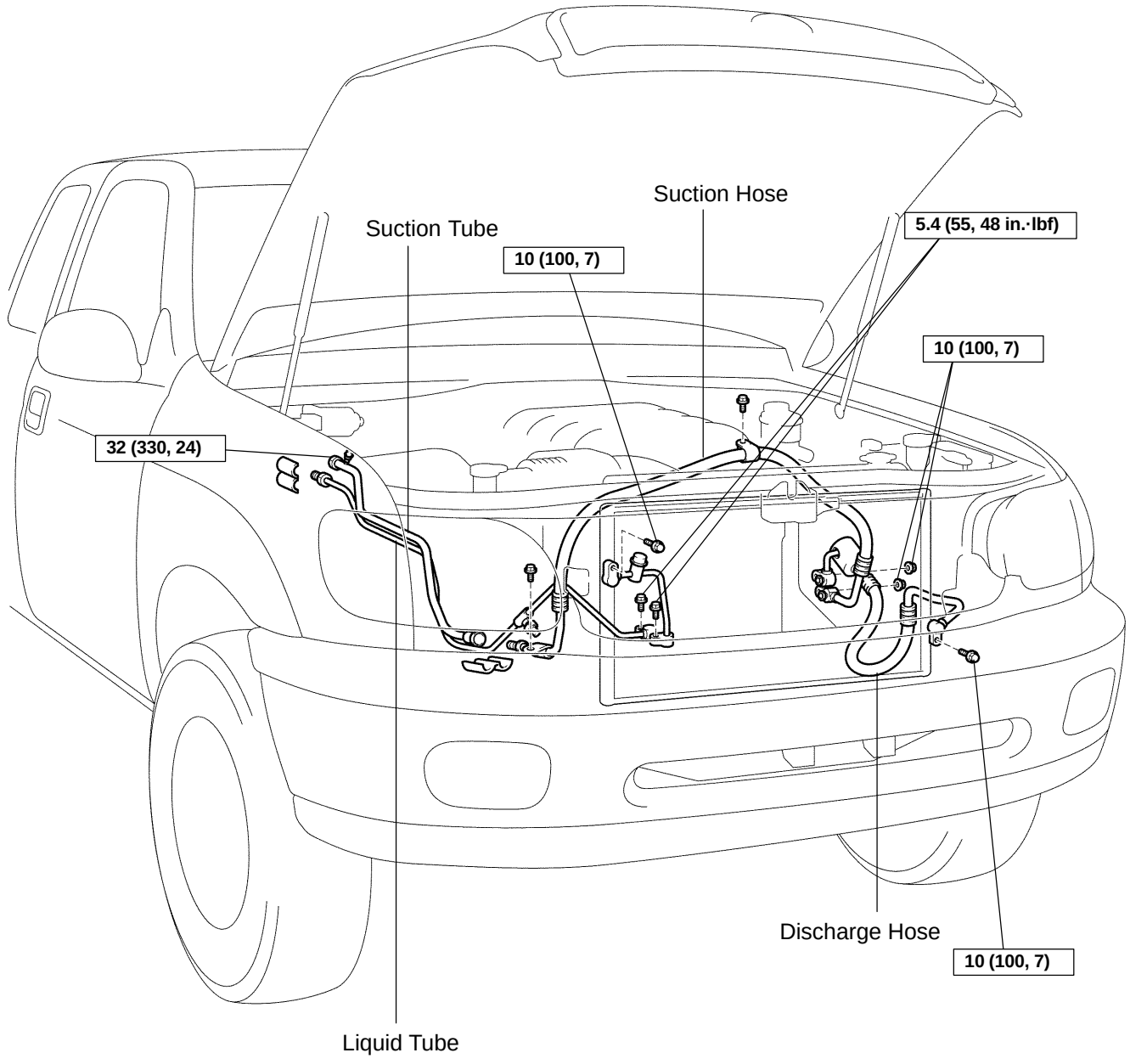

N·m (kgf·cm, ft·lbf) : Specified torque

▲ Non–reusable part

P

I11121

AC0CE–03

REPLACEMENT

1. DISCHARGE REFRIGERANT FROM REFRIGERATION SYSTEM

2. REPLACE FAULTY TUBE OR HOSE

NOTICE:

Cap the open fittings immediately to keep moisture or dirt out of the system.

3. TIGHTEN JOINT OF BOLT OR NUT AT SPECIFIED TORQUE

NOTICE:

Connections should not be torqued tighter than the specified torque.

Part tightened	N·m	kgf·cm	ft·lbf
Receiver x Liquid tube	5.4	55	48 in.·lbf
Condenser x Discharge hose	10	100	7
Condenser x Liquid tube	10	100	7
Compressor x Discharge hose	10	100	7
Compressor x Suction hose	10	100	7
Cooling unit x Suction tube	32	330	24
Expansion valve x Evaporator	5.4	55	48 in.·lbf

4. EVACUATE AIR IN REFRIGERATION SYSTEM AND CHARGE SYSTEM WITH REFRIGERANT

Specified amount: 600 ± 50 g (21.16 ± 1.76 oz.)

5. INSPECT FOR LEAKAGE OF REFRIGERANT

Using a gas leak detector, check for leakage of refrigerant.

6. INSPECT AIR CONDITIONING OPERATION

COOLING UNIT

AC271–01

ON–VEHICLE INSPECTION

1. INSPECT FOR LEAKAGE OF REFRIGERANT

(a) Remove the glove compartment door.
(b) Remove the lower No. 2 finish panel.
(c) Remove the lower center cover.
(d) Remove the lower LH finish panel.
(e) Remove the lower cover (See page BO–72).

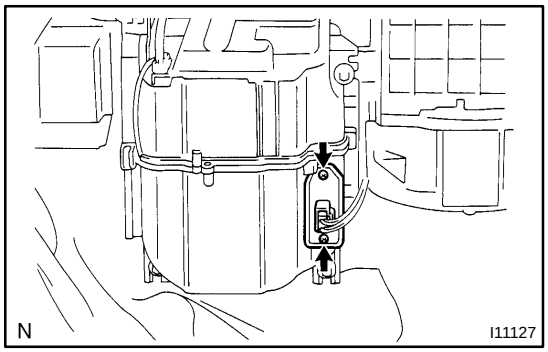

(f) Remove the blower resistor.
  (1) Disconnect the connector.
  (2) Remove the 2 screws and blower resistor.
(g) Using a gas leak detector, check for leakage.

If there is leakage, check the tightening torque at the joints or check the evaporator.

(h) Install the blower resistor with the 2 screws.
(i) Install the lower cover.
(j) Install the lower LH finish panel.
(k) Install the lower center cover.
(l) Install the lower No. 2 finish panel.
(m) Install the glove compartment door (See page BO–79).

2. INSPECT EXPANSION VALVE

(a) Check quantity of gas during refrigeration cycle.
(b) Set on manifold gauge set.
(c) Run engine.
  (1) Run the engine at 1,500 rpm for at least 5 minutes.
  (2) Then check that the high pressure reading is 1.37 – 1.57 Mpa (14 – 16 kgm/cm^2, 199 – 288 psi).
(d) Check expansion valve.

If the expansion valve is faulty, the low pressure reading will drop to 0 kPa (0 kgf/cm^2, 0 psi).

HINT:

When the lower pressure drop to 0 kPa (0 kgf/cm^2, 0 psi), feel the receiver's IN and OUT sides for no temperature difference.

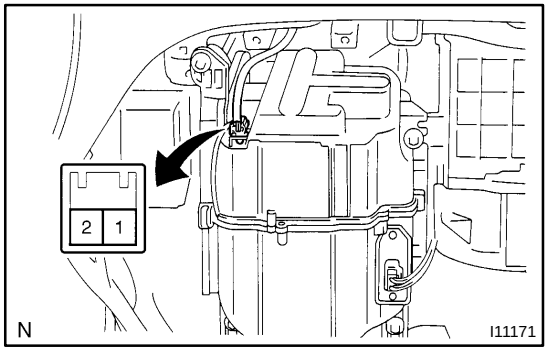

3. INSPECT THERMISTOR RESISTANCE

(a) Disconnect the connector.
(b) Measure resistance between terminals.
  Standard resistance: 1,500 Ω at 25˚C (77˚F)

If resistance is not as specified, replace the thermistor.

AC0CF–06

COMPONENTS

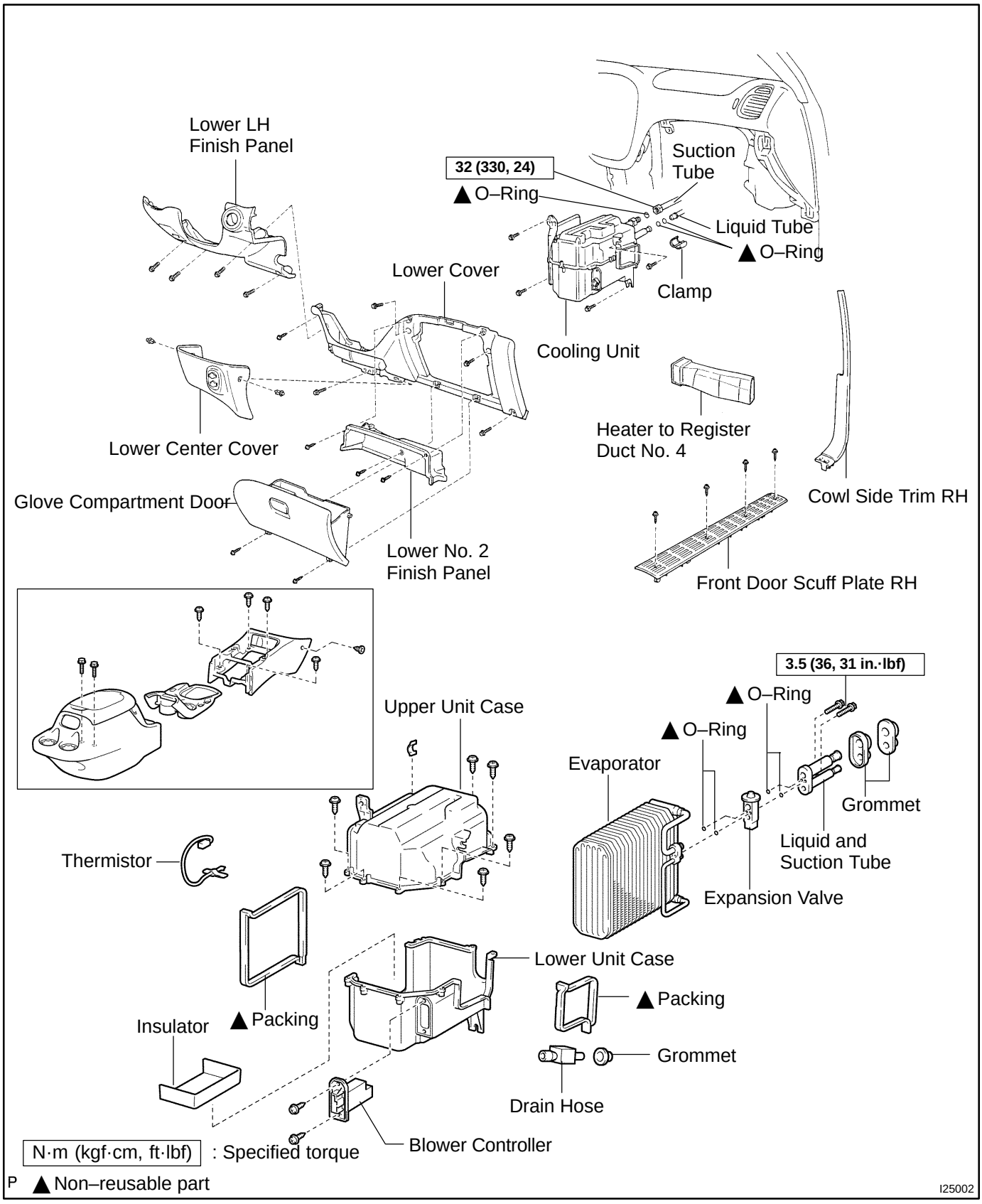

AC22J–02

REMOVAL

1. DISCHARGE REFRIGERANT FROM REFRIGERATION SYSTEM

HINT:

At the time of installation, please refer to the following item.

Evacuate air from refrigeration system.

Charge system with refrigerant and inspect for leakage of refrigerant.

Specified amount: 600 ± 50 g (21.16 ± 1.76 oz.)

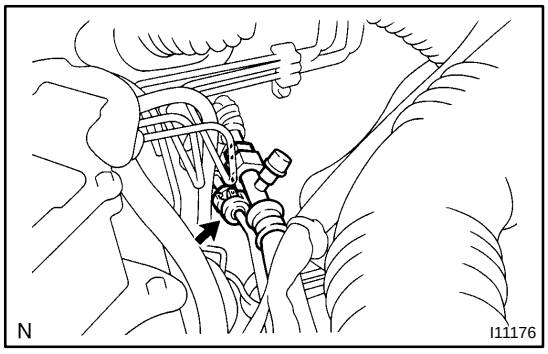

2. DISCONNECT LIQUID TUBE

(a) Using SST, remove the piping clamp.

SST 09870–00025 (Liquid tube)

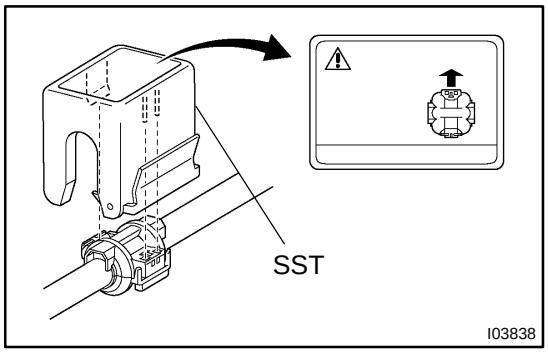

(1) Insert SST to piping clamp.

HINT:

Confirm the direction of the piping clamp claw and SST using the illustration showing on the caution label.

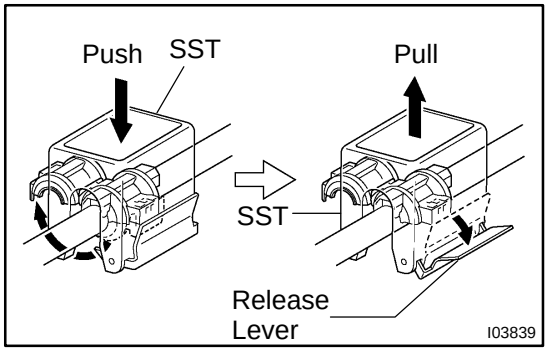

(2) Push down SST and release the clamp lock.

NOTICE:

Be careful not to deform the tubes, when pushing SST.

(3) Pull SST slightly and push the release lever, then remove the piping clamp with SST.

(4) Remove the piping clamp from SST.

(b) Disconnect the both tubes.

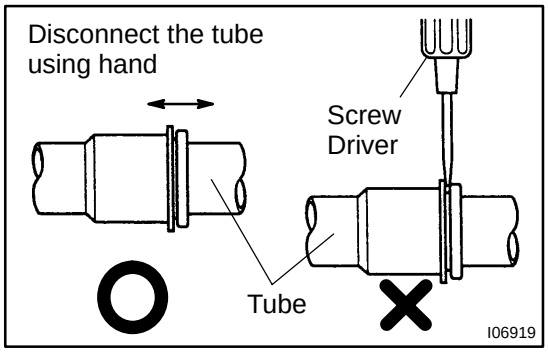

NOTICE:

- **Do not use tools like screwdriver to remove the tube.**
- **Cap the open fittings immediately to keep moisture or dirt out of the system.**

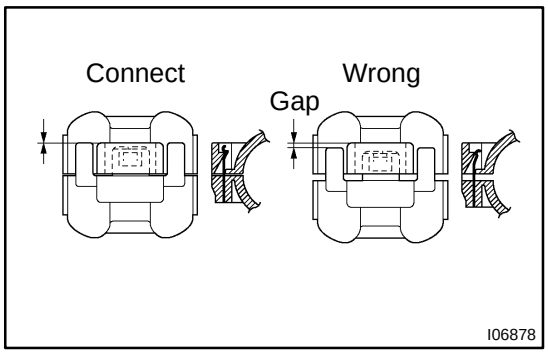

HINT:
At the time of installation, please refer to the following item.

- ▲ Lubricate 2 new O–rings with compressor oil and install them to the tubes.
- ▲ After connection, check the fitting for claw of the piping clamp.

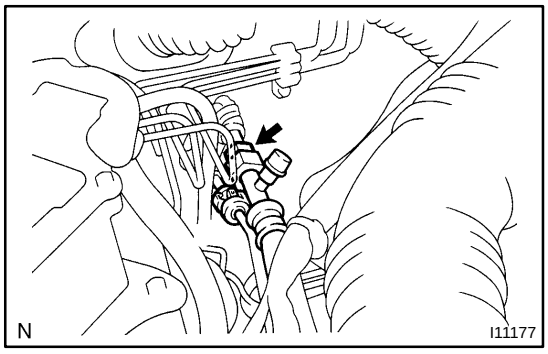

3. DISCONNECT SUCTION TUBE FROM COOLING UNIT FITTINGS

Loosen the nut and disconnect the both tube.

Torque: 32 N·m (330 kgf·cm, 24 ft·lbf)

NOTICE:

Cap the open fittings immediately to keep moisture or dirt out of the system.

HINT:
At the time of installation, please refer to the following item.
Lubricate a new O–ring with compressor oil and install them to the tube.

4. REMOVE GLOVE COMPARTMENT PARTS
5. REMOVE LOWER NO. 2 FINISH PANEL
6. REMOVE LOWER CENTER COVER
7. REMOVE LOWER LH FINISH PANEL
8. REMOVE LOWER COVER (See page BO–72)
9. REMOVE NO. 4 HEATER TO REGISTER DUCT

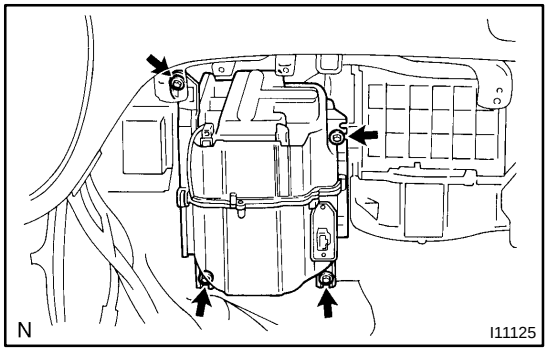

10. REMOVE COOLING UNIT

(a) Disconnect the connectors.
(b) Remove the 3 screws, bolt and the cooling unit.

AC272–01

DISASSEMBLY

1. REMOVE BLOWER RESISTOR

Remove the 2 screws and blower resistor.

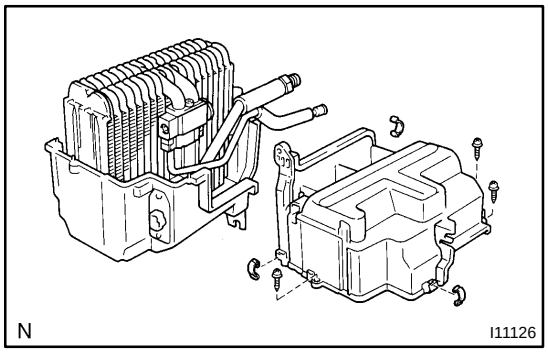

2. SEPARATE UPPER AND LOWER UNIT CASES

(a) Disconnect the connector clamp from upper unit case.
(b) Using a knife, cut off the each packing.
(c) Remove the 3 clips and 3 screws.
(d) Separate the upper and lower unit case, then pull out the thermistor from evaporator.

3. REMOVE EVAPORATOR FROM LOWER UNIT CASE

HINT:

At the time of reassembly, please refer to the following item.
If evaporator is replaced, add compressor oil to compressor.

Add 40 – 50 cc (1.4 – 1.7 fl.oz.)
Compressor oil: ND–OIL 8 or equivalent

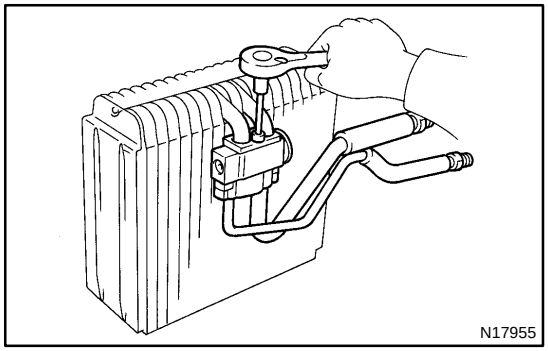

4. REMOVE EXPANSION VALVE

Using a hexagon wrench (5.0 mm, 0.20 in.), remove the 2 bolts and separate the expansion valve, evaporator and tubes.

Torque: 5.4 N·m (55 kgf·cm, 48 in.·lbf)

HINT:

At the time of reassembly, please refer to the following item.
Lubricate 4 new O–rings with compressor oil and install them to the tubes and valve.

AC22L–02

INSPECTION

1. CHECK EVAPORATOR FINS FOR BLOCKAGE

If the fins are clogged, clean them with compressed air.

2. CHECK FITTING FOR CRACKS FOR SCRATCHES

If necessary repair or replace.

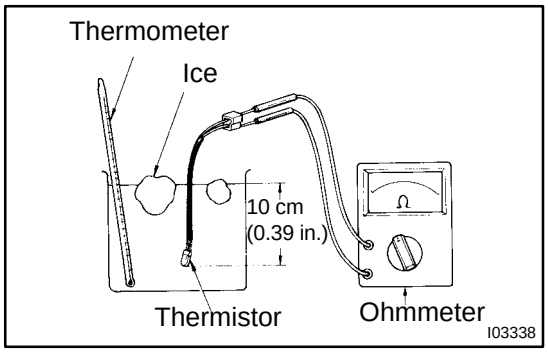

3. INSPECT THERMISTOR RESISTANCE

(a) Place the thermistor in cold water and while changing the temperature of the water, measure resistance at the connector and at the same time, measure temperature of the water with a thermometer.

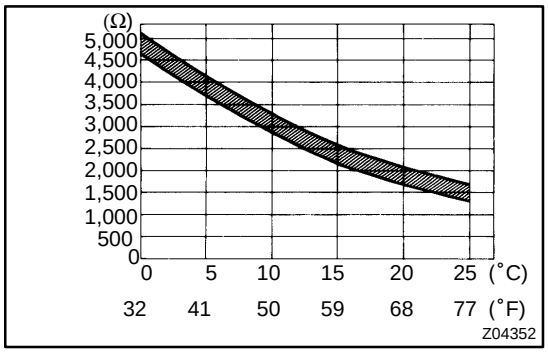

(b) Compare the 2 readings on the chart.

If resistance value is not as specified, replace the thermistor.

AC0CI–01

REASSEMBLY

Reassembly is in the reverse order of disassembly (See page AC–29).

AC0CJ–01

INSTALLATION

Installation is in the reverse order of removal (See page AC–27).

HEATER UNIT

COMPONENTS

AC0CK–05

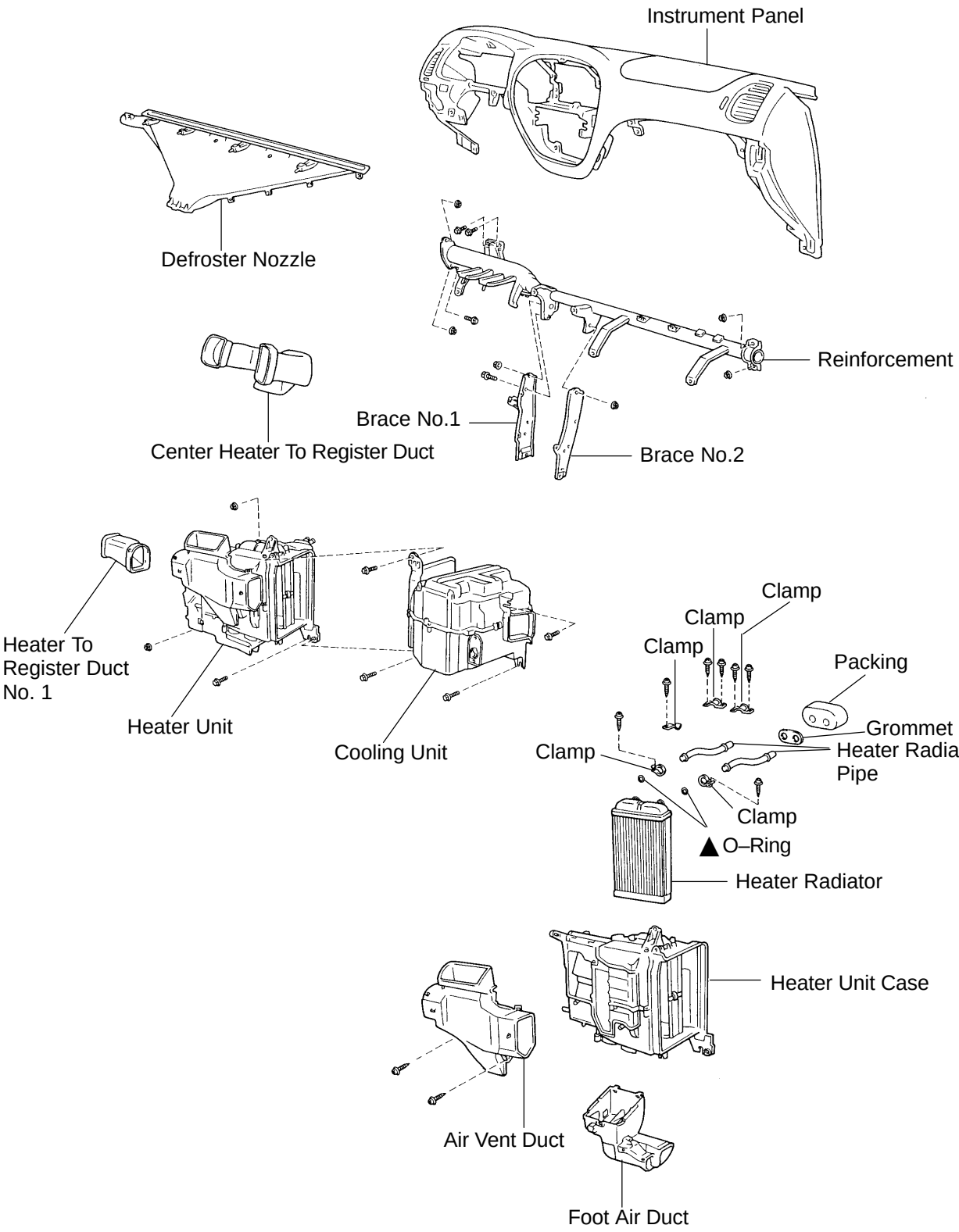

AC273–01

REMOVAL

1. REMOVE COOLING UNIT (See page AC–27)

2. DRAIN ENGINE COOLANT FROM RADIATOR

HINT:

It is not necessary to drain out all the coolant.

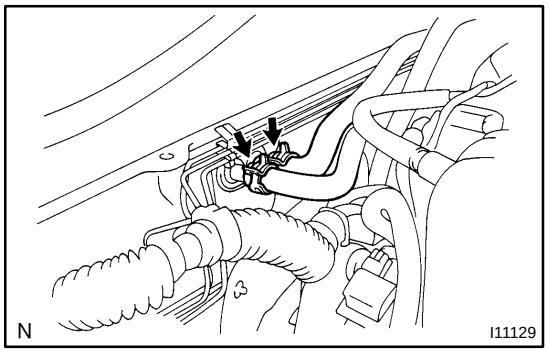

3. DISCONNECT WATER HOSES FROM HEATER RADIATOR PIPES

(a) Using pliers, grip the claw of clip and slide the clip along the hose.

(b) Disconnect the water hoses.

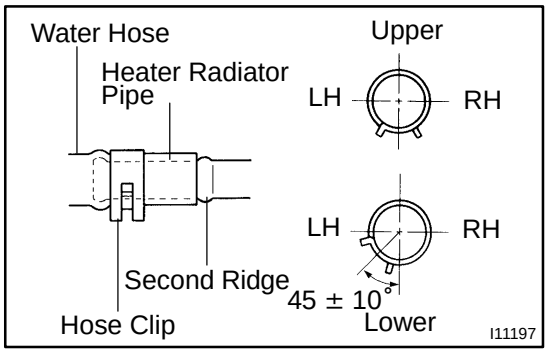

HINT:

At the time of installation, please refer to the following items.

▲ Push the water hose onto the heater radiator pipe as far as the second ridge on the pipe.

▲ Install the hose clip in a position, as shown in the illustration.

4. REMOVE INSTRUMENT PANEL AND REINFORCEMENT (See page BO–72)

5. REMOVE DEFROSTER NOZZLE AND HEATER TO REGISTER DUCT

6. REMOVE HEATER UNIT

Remove the 3 nuts and heater unit.

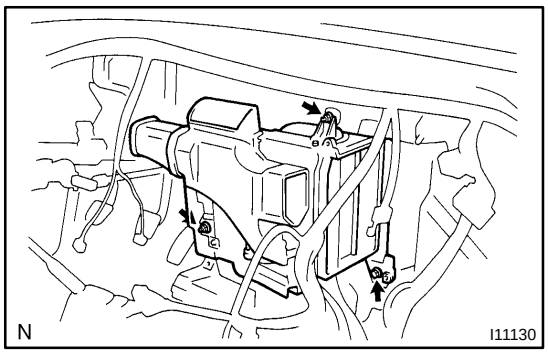

AC22M–02

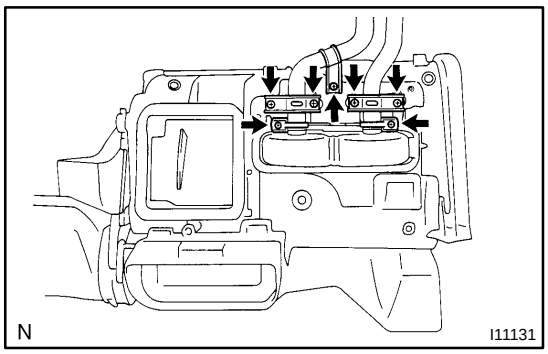

DISASSEMBLY

1. REMOVE HEATER RADIATOR

(a) Remove the 5 screws and 3 clamps.

(b) Pull out the heater radiator.

(c) Remove the 2 screws and 2 clips, then disconnect the heater radiator pipes.

2. REMOVE AIR VENT DUCT

Remove the 2 screws and duct.

AC22N–02

INSPECTION

INSPECT FINS FOR BLOCKAGE

If the fins are clogged, clean them with compressed air.

AC0CN–01

REASSEMBLY

Reassembly is in the reverse order of disassembly (See page AC–35).

AC0CO–01

INSTALLATION

Installation is in the reverse order of removal (See page AC–34).

BLOWER UNIT

COMPONENTS

AC0CU–03

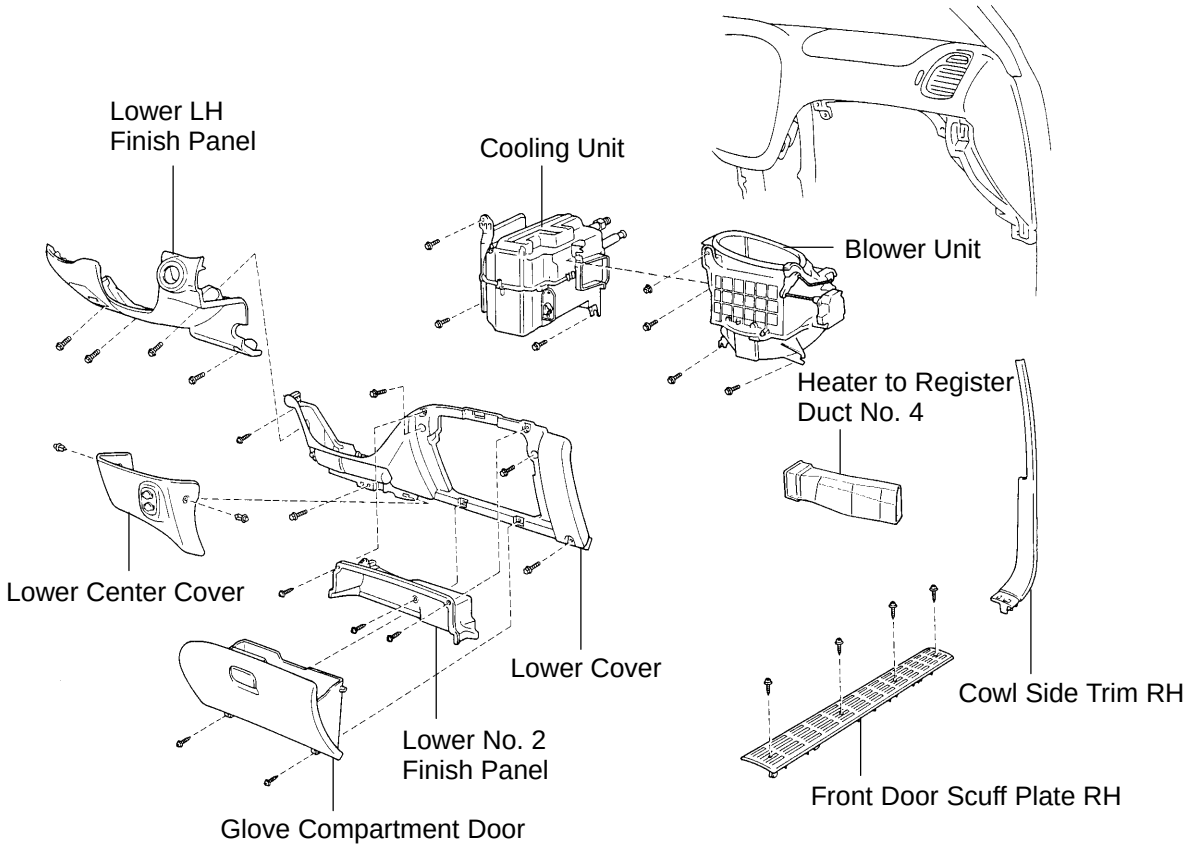

N

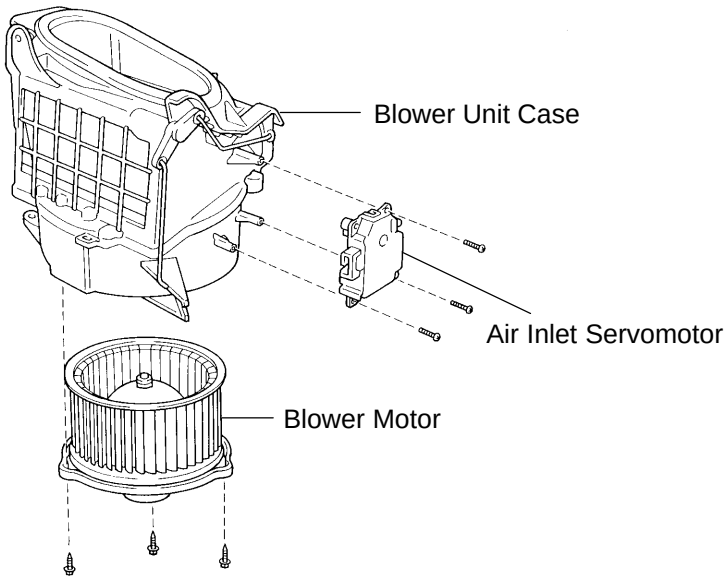

I11157
I11132

N

I11178

AC0CV–03

REMOVAL

1. REMOVE COOLING UNIT (See page AC–27)

2. REMOVE BLOWER UNIT

(a) Disconnect the connector from the blower motor.

(b) Disconnect the air inlet damper control cable from the blower unit.

HINT:

At the time of installation, please refer to the following item.

After connection, adjust the control cable.

(c) Remove the nut, bolt and blower unit.

AC0CW–03

DISASSEMBLY

1. REMOVE BLOWER MOTOR

Remove the 3 screws and blower motor.

2. REMOVE AIR INLET SERVOMOTOR

Remove the 3 screws and servomotor.

AC274–01

INSPECTION

INSPECT AIR INLET SERVOMOTOR OPERATION

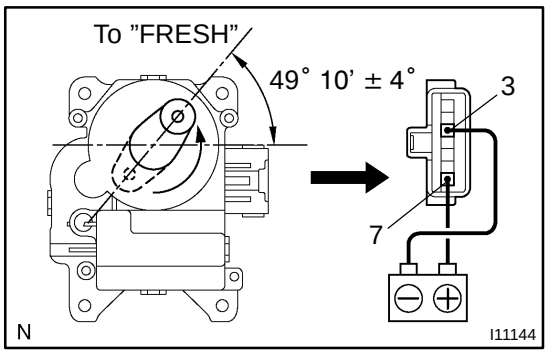

(a) Connect the positive (+) lead from the battery to terminal 7 and negative (–) lead to terminal 3.

(b) Check the motor arm rotates counterclockwise and arm stops on the ”FRESH” position.

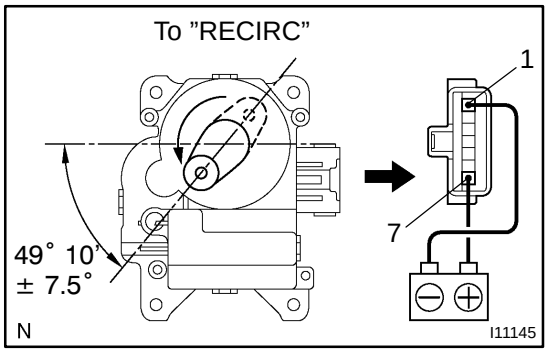

(c) Connect the positive (+) lead from the battery to terminal 7 and negative (–) lead to terminal 1.

(d) Check the motor arm rotates counterclockwise and arm stops on the ”RECIRC” position.

AC0CY–01

REASSEMBLY

Reassembly is in the reverse order of disassembly (See page AC–41).

AC0CX–01

INSTALLATION

Installation is in the reverse order of removal (See page AC–40).

COMPRESSOR AND MAGNETIC CLUTCH

AC275–01

ON–VEHICLE INSPECTION

1. SET ON MANIFOLD GAUGE SET (See page AC–19)

2. START ENGINE

3. INSPECT COMPRESSOR FOR METALLIC SOUND

Check if there is a metallic sound from the compressor when the A/C switch is on.

If metallic sound is not heard, replace the compressor assembly.

4. INSPECT REFRIGERANT PRESSURE (See page AC–3)

5. STOP ENGINE

6. INSPECT VISUALLY FOR LEAKAGE OF REFRIGERANT FROM SAFETY SEAL

Using a gas leak detector, check for leakage of refrigerant.

If there is any leakage, replace the compressor assembly.

7. SET OFF MANIFOLD GAUGE SET (See page AC–20)

8. CHECK FOR LEAKAGE OF GREASE FROM CLUTCH BEARING

9. CHECK FOR SIGNS OF OIL ON PRESSURE PLATE

If necessary, repair or replace.

10. INSPECT MAGNETIC CLUTCH BEARING FOR NOISE

(a) Start engine.

(b) Check for abnormal noise from near the compressor when the A/C switch is OFF.

If abnormal noise is being emitted, replace the magnetic clutch.

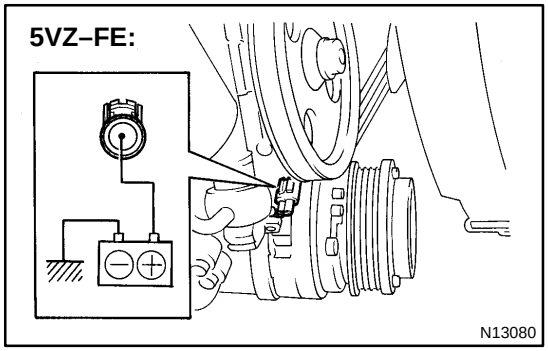

11. 5VZ–FE engine: INSPECT MAGNETIC CLUTCH OPERATION

(a) Disconnect the connector.

(b) Connect the positive (+) lead from the battery to terminal on the magnetic clutch connector and the negative (–) lead to the body ground.

(c) Check that the magnetic clutch is energized.

If operation is not as specified, replace the magnetic clutch.

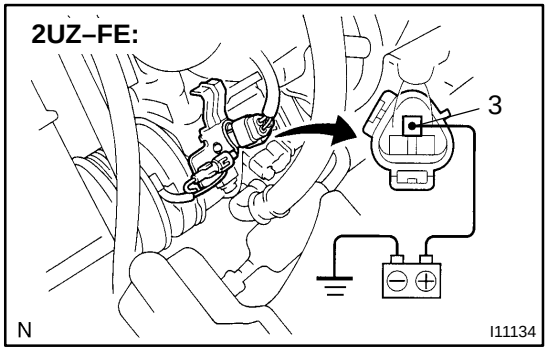

12. 2UZ–FE engine: INSPECT MAGNETIC CLUTCH OPERATION

(a) Disconnect the connector.

(b) Connect the positive (+) lead from the battery to terminal 3 and the negative (–) lead to the body ground.

(c) Check that the magnetic clutch is energized.

If operation is not as specified, replace the magnetic clutch.

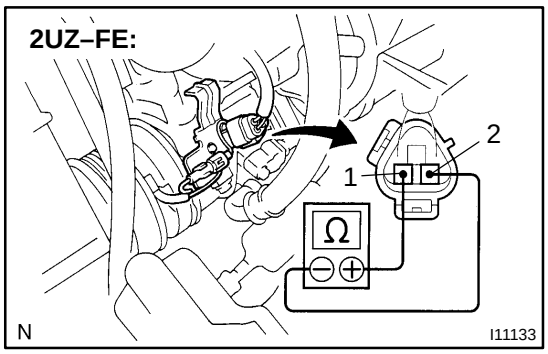

13. 2UZ–FE engine:
INSPECT COMPRESSOR LOCK SENSOR RESISTANCE

(a) Disconnect the connector.

(b) Measure resistance between terminals 1 and 2.
Standard resistance:
65 – 125 Ω at 20 ˚C (68 ˚F)

If resistance is not as specified, replace the compressor.

AC22Q–03

COMPONENTS

5VZ–FE:

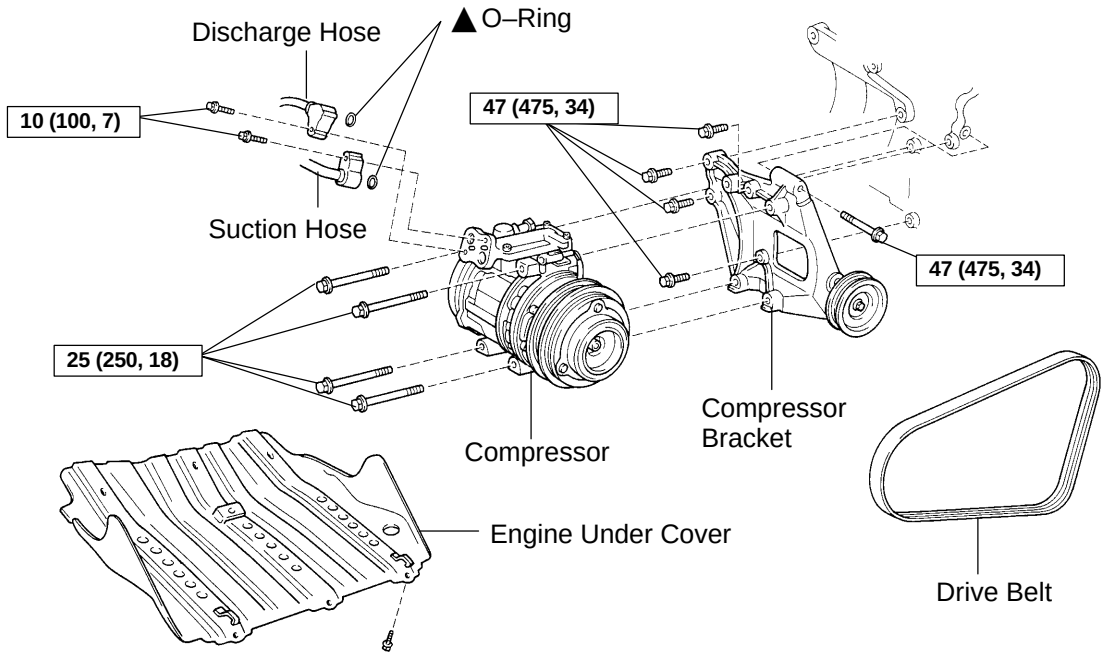

N

2UZ–FE:

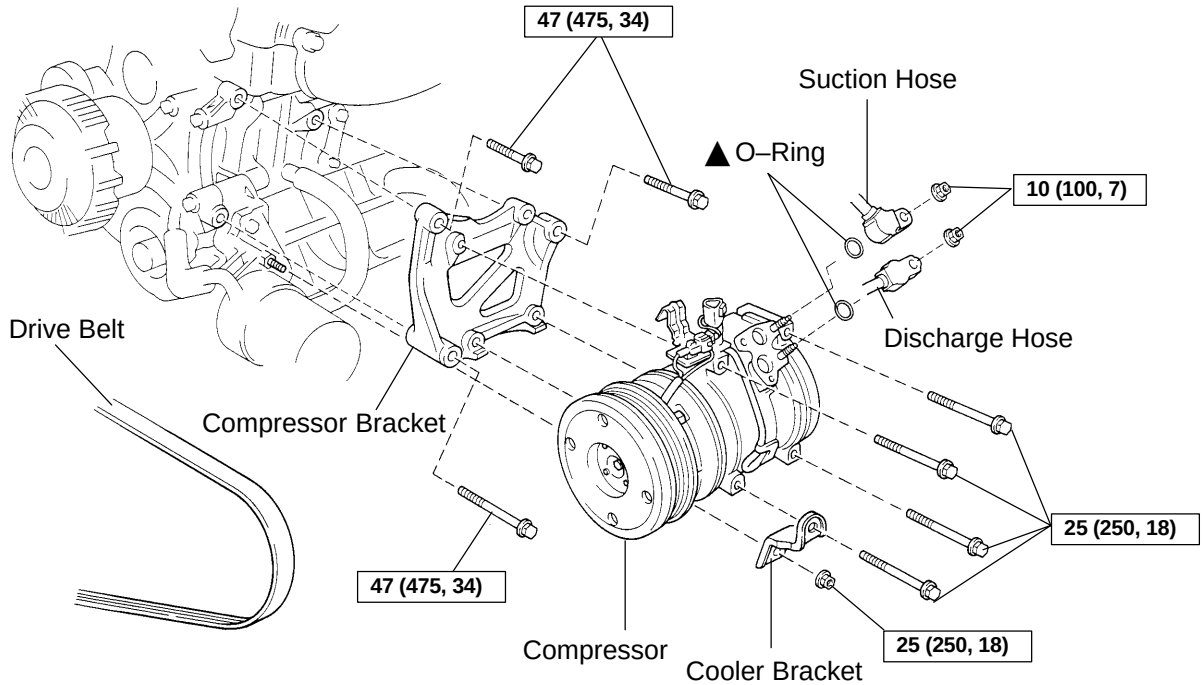

I11135
I11136

N

N·m (kgf·cm, ft·lbf) : Specified torque

▲ Non–reusable part

I11179

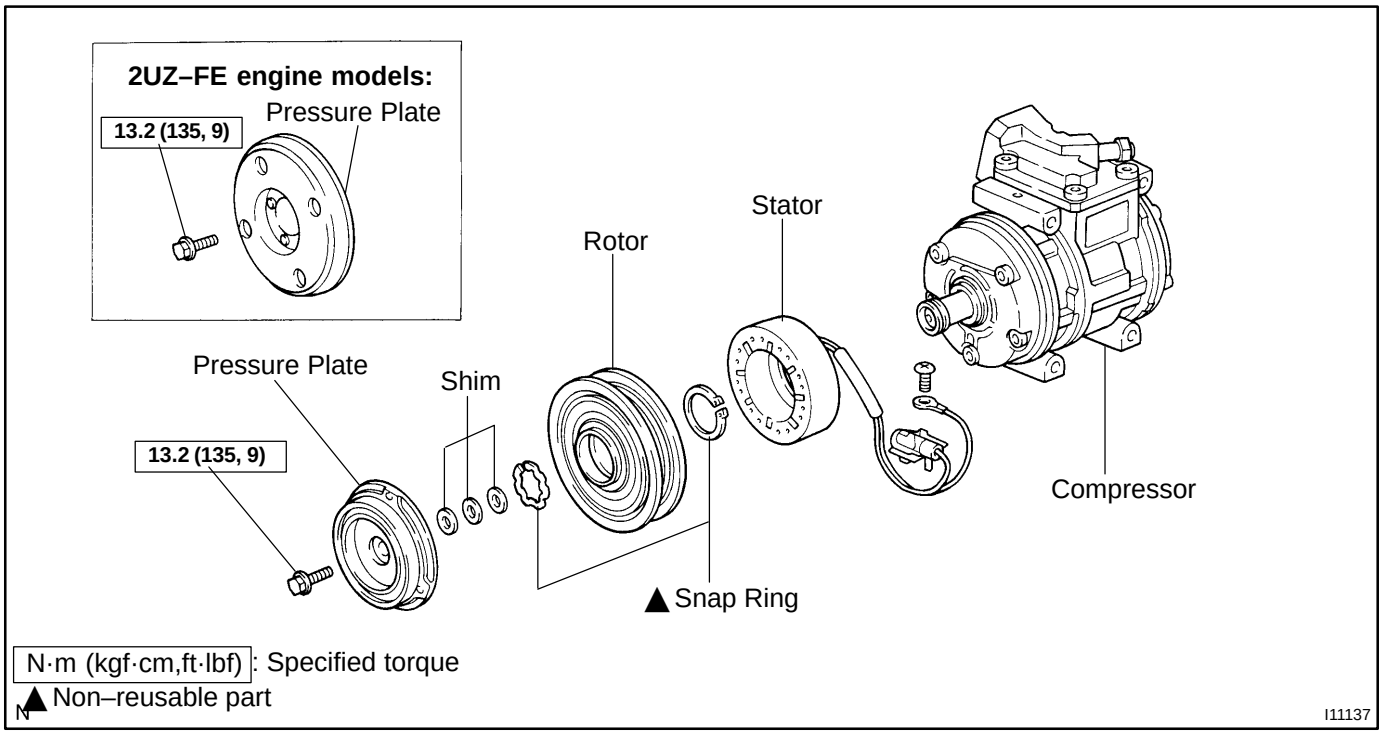
2UZ–FE engine models:
13.2 (135, 9)
Pressure Plate
Stator
Rotor
Pressure Plate
Shim
13.2 (135, 9)
Compressor
▲Snap Ring
N·m (kgf·cm,ft·lbf): Specified torque
▲Non–reusable part
I11137

AC0D1–03

REMOVAL

1. RUN ENGINE AT IDLE SPEED WITH A/C ON FOR APPROX. 10 MINUTES

2. STOP ENGINE

3. DISCONNECT NEGATIVE (–) TERMINAL CABLE FROM BATTERY

4. DISCHARGE REFRIGERANT FROM REFRIGERATION SYSTEM

5. 5VZ–FE engine:
REMOVE ENGINE UNDER COVER

6. 5VZ–FE engine:
DISCONNECT DISCHARGE AND SUCTION HOSES

Remove the 2 bolts and disconnect the both hoses.

NOTICE:

Cap the open fitting immediately to keep moisture or dirt out of the system.

7. 2UZ–FE engine:
DISCONNECT DISCHARGE AND SUCTION HOSES

Remove the 2 nuts and disconnect the both hoses.

NOTICE:

Cap the open fitting immediately to keep moisture or dirt out of the system.

8. REMOVE DRIVE BELT (See page AC–17)

9. 5VZ–FE engine:
REMOVE COMPRESSOR

(a) Disconnect the connector.
(b) Remove the 4 bolts and compressor.

10. 2UZ–FE engine:
REMOVE COMPRESSOR

(a) Disconnect the connector.
(b) Remove the 4 bolts and nut.
(c) Remove the cooler bracket.
(d) Remove the compressor.

AC0D2–04

DISASSEMBLY

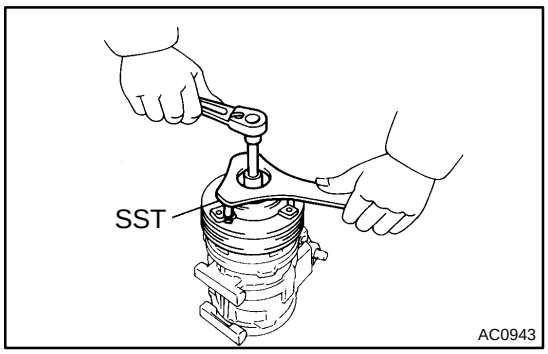

1. REMOVE PRESSURE PLATE

(a) Using SST and a socket wrench, remove the shaft bolt.
SST 07112–76060
Torque: 13.2 N·m (135 kgf·cm, 9 ft·lbf)

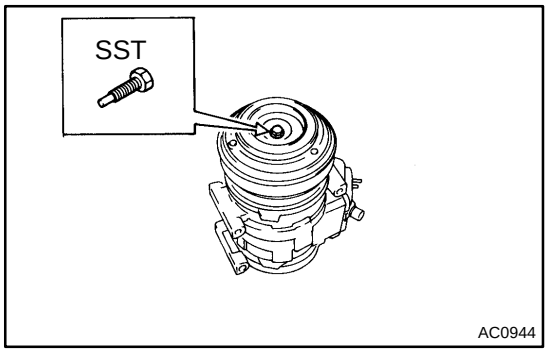

(b) Install SST on the pressure palate.
SST 07112–66040

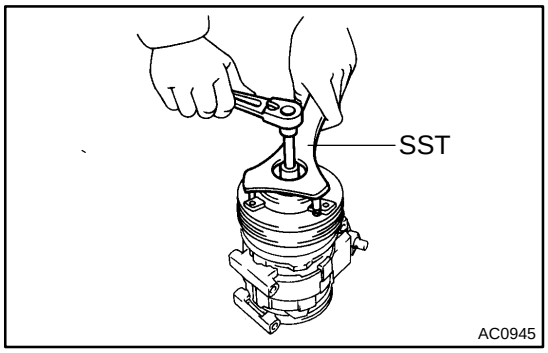

(c) Using SST and socket wrench, remove the pressure plate.
SST 07112–66040, 07112–76060,

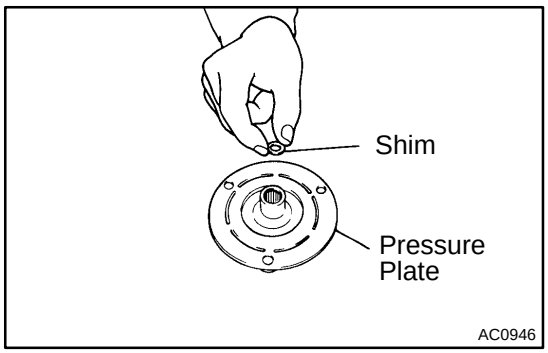

(d) Remove the shims from the pressure palate.

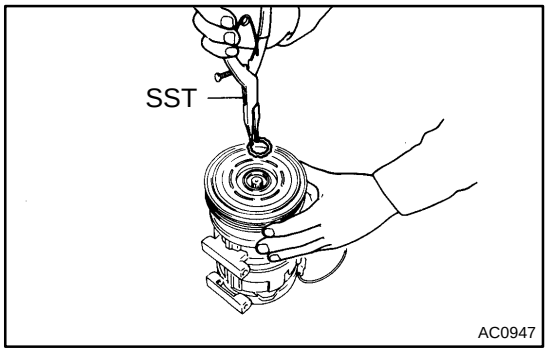

2. REMOVE ROTOR

(a) Using SST, remove the snap ring.
SST 95994–10020

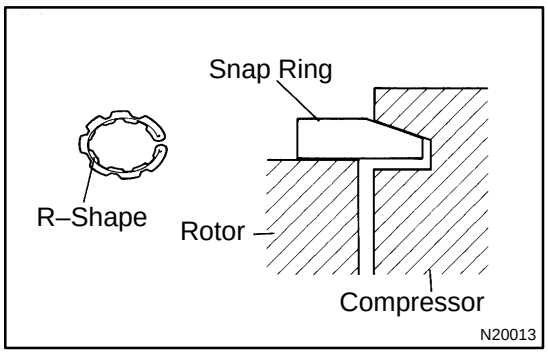

NOTICE:
The snap ring should be installed so that beveled side faces up.

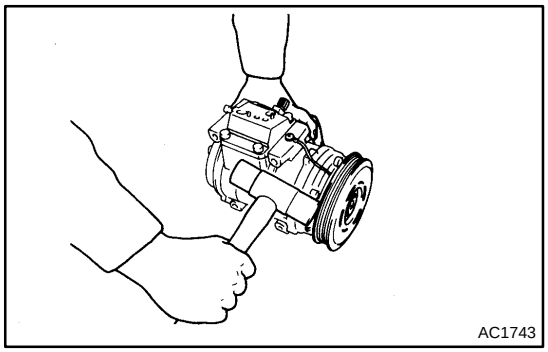

(b) Using a plastic hammer, tap the rotor off the shaft.

NOTICE:
Be careful not to damage the pulley when tapping on the rotor.

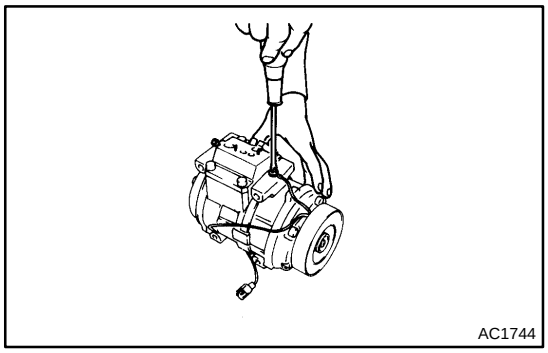

3. REMOVE STATOR

(a) Disconnect the stator lead wire from the compressor housing.

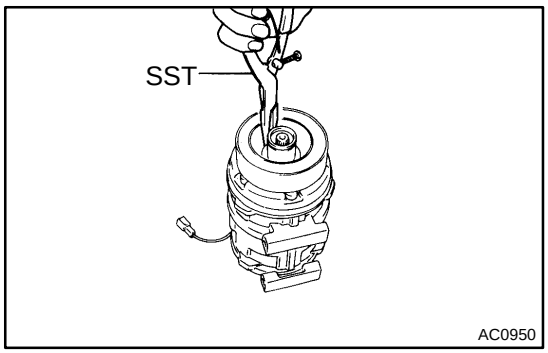

(b) Using SST, remove the snap ring.
SST 95994–10020

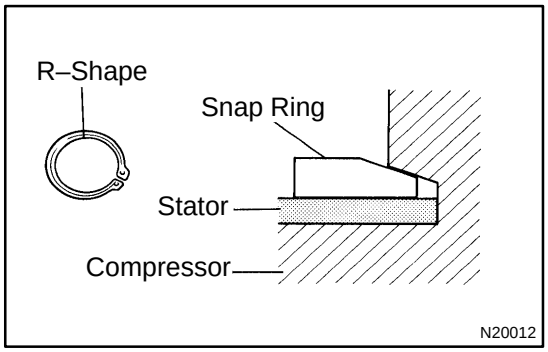

NOTICE:
The snap ring should be installed so that its beveled side faces up.

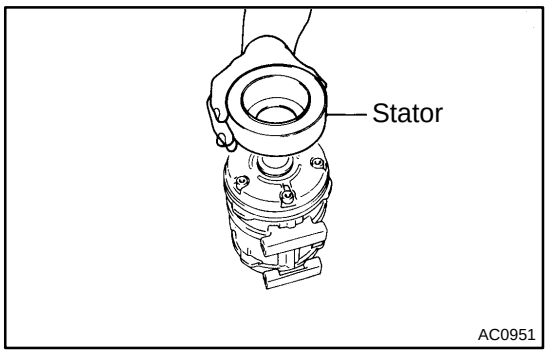

(c) Remove the stator.

AC0D3–03

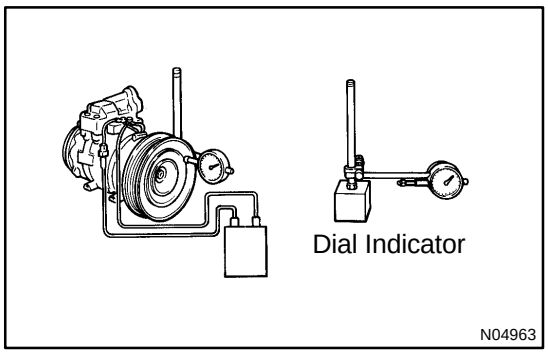

REASSEMBLY

Reassembly is in the reverse order of disassembly (See page AC–50).

AFTER REASSEMBLY, CHECK MAGNETIC CLUTCH CLEARANCE

(a) Set the dial indicator to the pressure plate of the magnetic clutch.

(b) Connect the magnetic clutch lead wire to the positive (+) terminal of the battery.

(c) Check the clearance between the pressure plate and rotor when connecting the negative (–) terminal to the battery.

Standard clearance:
0.5 ± 0.15 mm (0.020 ± 0.0059 in.)

If the clearance is not within the standard clearance, adjust the clearance using shims to obtain the standard clearance.

Standard thickness:
0.1 mm (0.004 in.)
0.3 mm (0.012 in.)
0.5 mm (0.020in.)

AC0D4–03

INSTALLATION

1. 5VZ–FE engine:
INSTALL COMPRESSOR

(a) Install the compressor with the 4 bolts.
Torque: 25 N·m (250 kgf·cm, 18 in.·lbf)

(b) Connect the connector.

2. 2UZ–FE engine:
INSTALL COMPRESSOR

(a) Install the compressor with cooler bracket with the 4 bolts and nut.
Torque: 25 N·m (250 kgf·cm, 18 in.·lbf)

(b) Connect the connector.

3. 5VZ–FE engine:
CONNECT DISCHARGE AND SUCTION HOSES

Connect the both hoses with the 2 bolts.
Torque: 10 N·m (100 kgf·cm, 7 in.·lbf)

NOTICE:
Hose should be connected immediately after the caps have been removed.

HINT:
Lubricate 2 new O–rings with compressor oil and install them to the hoses.

4. 2UZ–FE engine:
CONNECT DISCHARGE AND SUCTION HOSES

Connect the both hoses with the 2 nuts.
Torque: 10 N·m (100 kgf·cm, 7 in.·lbf)

NOTICE:
Hose should be connected immediately after the caps have been removed.

HINT:
Lubricate 2 new O–rings with compressor oil and install them to the hoses.

5. INSTALL AND CHECK DRIVE BELT (See page AC–18 and AC–16)

6. 5VZ–FE engine:
INSTALL ENGINE UNDER COVER

7. CONNECT NEGATIVE (–) TERMINAL CABLE TO BATTERY

8. EVACUATE AIR FROM REFRIGERATION SYSTEM

9. CHARGE SYSTEM WITH REFRIGERANT
Specified amount: 600 ± 50 g (21.16 ± 1.76 oz.)

10. INSPECT FOR LEAKAGE OF REFRIGERANT

Using a gas leak detector, check for leakage of refrigerant.
If there is leakage, check the tightening torque at the joints.

RECEIVER

AC276–01

ON–VEHICLE INSPECTION

INSPECT FITTINGS FOR LEAKAGE

Using a gas leak detector, check for leakage.

If there is leakage, check the tightening toque at the joints.

AC277–01

REMOVAL

1. DISCHARGE REFRIGERANT FROM REFRIGERATION SYSTEM

HINT:

At the time of the installation, please refer to the following item.

Evacuate air from refrigeration system.

Charge system with refrigerant and inspect for leakage of refrigerant.

Specified amount: 600 ± 50 g (21.16 ± 1.76 oz.)

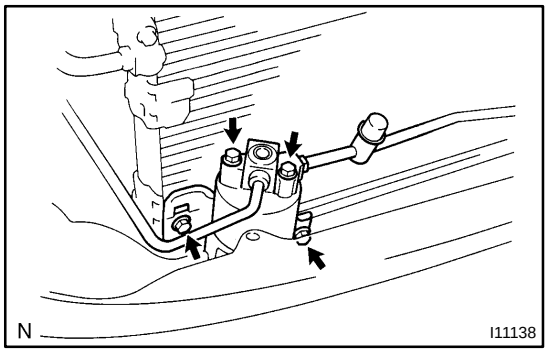

2. DISCONNECT 2 LIQUID TUBES FROM RECEIVER

Remove the 2 bolts and disconnect the both tubes.

Torque: 5.4 N·m (55 kgf·cm, 48 in.·lbf)

NOTICE:

Cap the open fittings immediately to keep moisture or dirt out of the system.

HINT:

At the time of the installation, please refer to the following item.

Lubricate 2 new O–rings with compressor oil and install them to the tubes.

3. REMOVE RECEIVER

(a) Remove the holder bolt and pull receiver downward.

HINT:

At the time of the installation, please refer to the following item.

If receiver is replaced, add compressor oil to compressor.

Add 20 cc (0.71 fl.oz.)

Compressor oil: ND–OIL 8 or equivalent

(b) Remove the bolt and holder.

AC278–01

INSTALLATION

Installation is in the reverse order of removal (See page AC–56).

CONDENSER

AC0D8–01

ON–VEHICLE INSPECTION

1. INSPECT CONDENSER FINS FOR BLOCKAGE OR DAMAGE

If the fins are clogged, wash them with water and dry with compressed air.

NOTICE:

Be careful not to damage the fins.

If the fins are bent, straighten them with a screwdriver or pliers.

2. INSPECT CONDENSER AND FITTINGS FOR LEAKAGE

Using a gas leak detector, check for leakage of refrigerant.

If there is leakage, check the tightening torque at the joints.

AC279–01

REMOVAL

1. DISCHARGE REFRIGERANT FROM REFRIGERATION SYSTEM

HINT:

At the time of installation, please refer to the following item.

Evacuate air from refrigeration system.

Charge system with refrigerant and inspect for leakage of refrigerant.

Specified amount: 600 ± 50 g (21.16 ± 1.76 oz.)

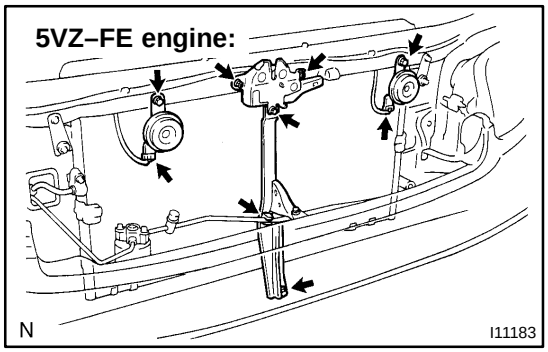

2. 2UZ–FE engine:
REMOVE A/T OIL COOLER

3. REMOVE HORN

4. REMOVE HOOD LOCK

5. REMOVE CENTER BRACE

6. REMOVE RECEIVER AND HOLDER
(See page AC–56)

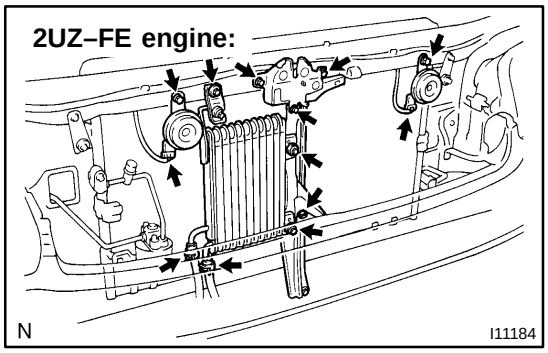

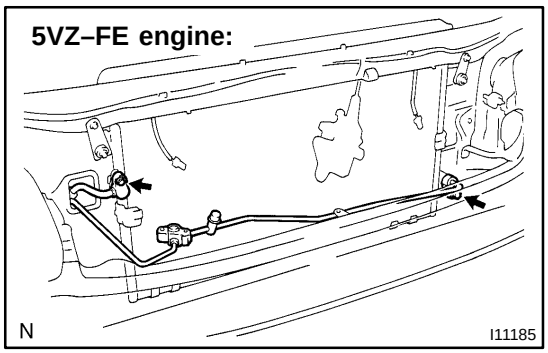

7. DISCONNECT LIQUID TUBE AND DISCHARGE HOSE

Remove the 2 bolts and disconnect the both tube and hose.

Torque:10 N·m (100 kgf·cm, 7 ft·lbf)

NOTICE:

Cap open the fittings immediately to keep moisture or dirt out of the system.

HINT:

At the time of installation, please refer to the following item.

Lubricate 2 new O–rings with compressor oil and install them to the tubes.

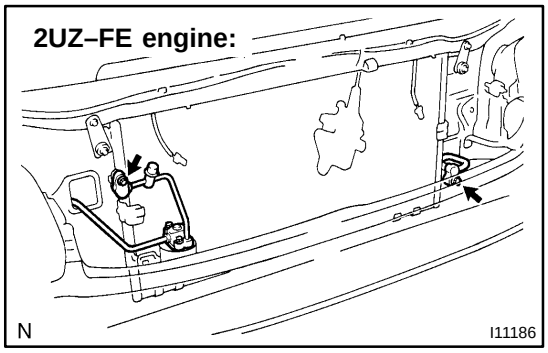

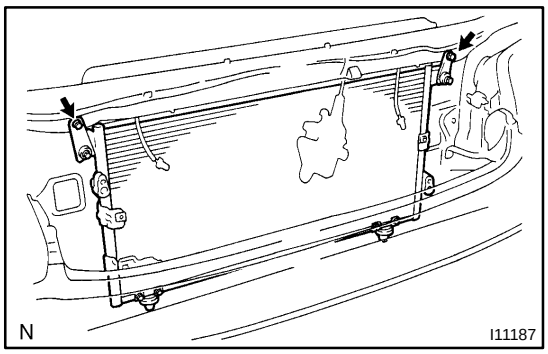

8. REMOVE CONDENSER

(a) Remove the 2 bolts and 2 lower brackets.

(b) Remove the 4 bolts and 2 upper brackets.

(c) Pull the condenser forward and pull it upward.

HINT:

At the time of installation, please refer to the following item.

If condenser is replaced, add compressor oil to the compressor.

Add 40 – 50 cc (1.4 – 1.7 fl.oz.)

Compressor oil: ND–OIL 8 or equivalent

AC0DA–01

INSTALLATION

Installation is in the reverse order of removal (See page AC–59).

WATER VALVE

AC27A–01

ON–VEHICLE INSPECTION

1. WARM UP ENGINE

2. DISCONNECT WATER VALVE CONTROL CABLE

3. INSPECT WATER VALVE OPERATION

(a) Check that warm air blown out the vent when the water valve lever is moved to ”WARM” position.

(b) Check that cool air blown out when the water valve is moved to the ”COOL” position.

If operation is not as specified, replace the water valve.

4. CONNECT WATER VALVE CONTROL CABLE

AC27B–01

REMOVAL

1. DRAIN ENGINE COOLANT FROM RADIATOR

HINT:

It is not necessary to drain out all the coolant.

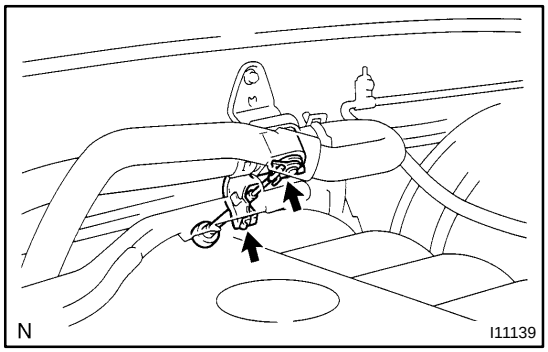

2. DISCONNECT WATER VALVE CONTROL CABLE FROM WATER VALVE

HINT:

At the time of installation, please refer to the following item.

After connection, adjust the control cable (See page AC–88).

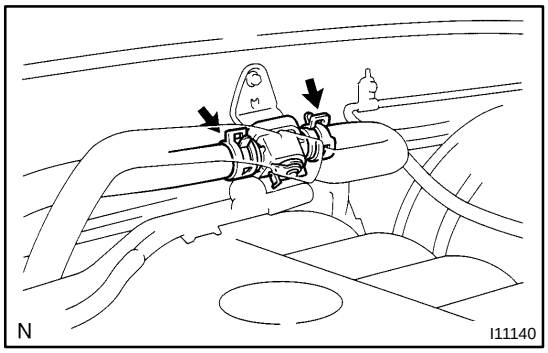

3. DISCONNECT WATER HOSES

(a) Using pliers, grip the claws of the hose clip and slide the hose clip along the hose.

(b) Disconnect the water hoses.

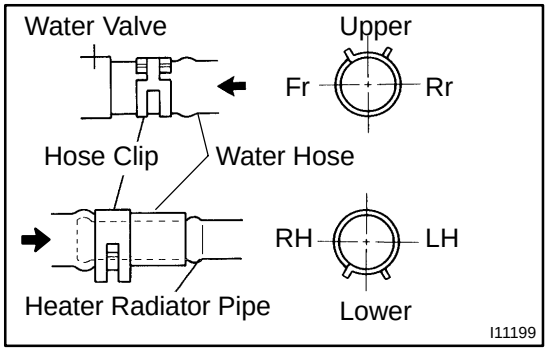

HINT:

At the time of installation, please refer to the following item.

▲ Heater radiator pipe:
Push the water hose onto the heater radiator pipe as far as second ridge on the pipe.

▲ Water valve:
Push the water hose onto the water valve pipe as far as water valve.

▲ Install the hose clip in a position, as shown in the illustration.

4. REMOVE WATER VALVE

Remove the bolt and water valve.

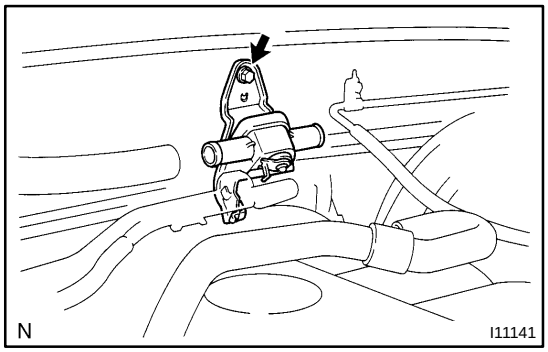

AC27C–01

INSTALLATION

Installation is in the reverse order of removal (See page AC–63).

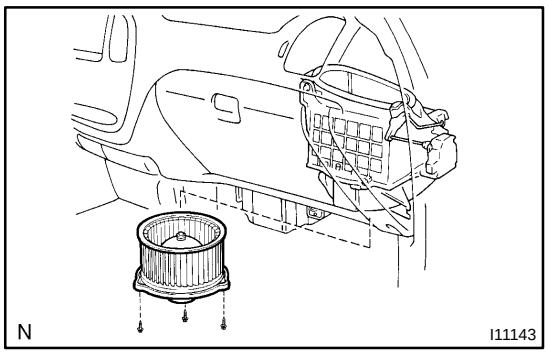

BLOWER MOTOR

AC22S–02

INSPECTION

1. REMOVE BLOWER MOTOR

(a) Disconnect the connector.

(b) Remove the 3 screws and motor.

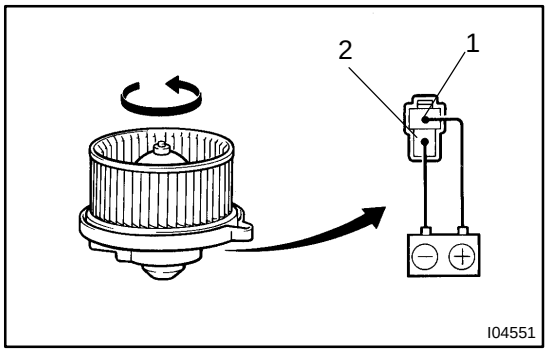

2. INSPECT BLOWER MOTOR OPERATION

Connect the positive (+) lead from the battery to terminal 1 and the negative (–) lead to terminal 2, then check that the motor operations smoothly.

If operation is not as specified, replace the blower motor.

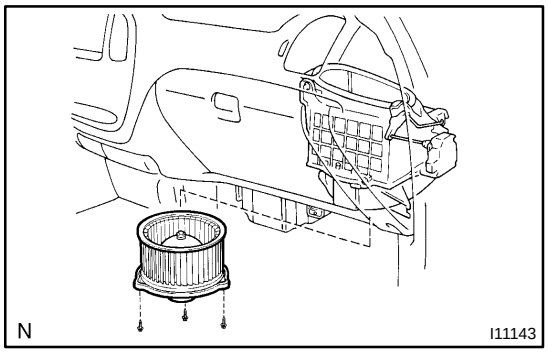

3. INSTALL BLOWER MOTOR

(a) Install the motor with the 3 screws.

(b) Connect the connector.

BLOWER RESISTOR

AC23E–02

INSPECTION

1. REMOVE GLOVE COMPARTMENT PARTS
2. REMOVE LOWER NO. 2 FINISH PANEL
3. REMOVE LOWER CENTER COVER
4. REMOVE LOWER LH FINISH PANEL
5. REMOVE LOWER COVER (See page BO–72)
6. REMOVE NO. 4 HEATER TO REGISTER DUCT

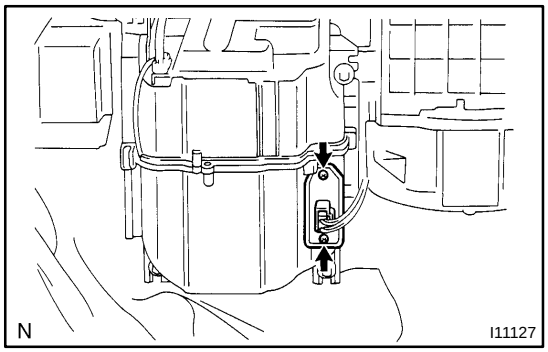

7. REMOVE BLOWER RESISTOR

(a) Disconnect the connector.

(b) Remove the 2 screws and blower resistor.

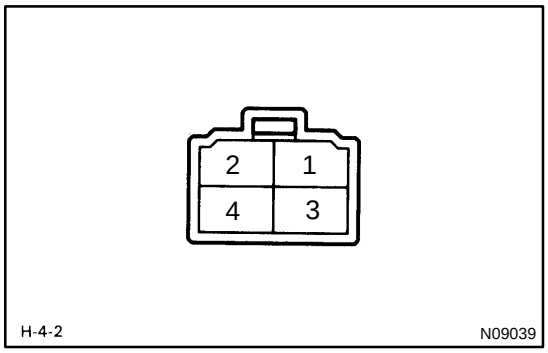

8. INSPECT BLOWER RESISTOR RESISTANCE

Tester connection	Condition	Specified condition
1–4	Constant	3.3 ± 0.2 Ω
1–3	Constant	1.9 ± 0.1 Ω
1–2	Constant	2.9 ± 0.2 Ω

If resistance is not as specified, replace the blower resistor.

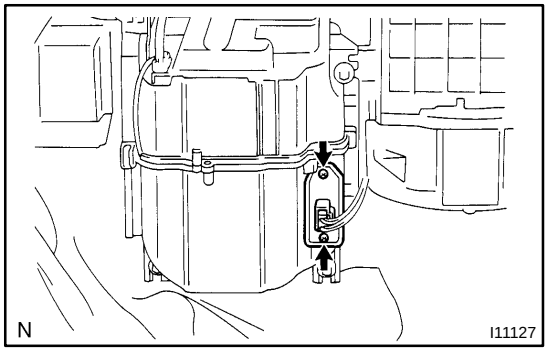

9. INSTALL BLOWER RESISTOR

(a) Install the blower resistor with the 2 screws.

(b) Connect the connector.

10. INSTALL NO. 4 HEATER TO REGISTER DUCT
11. INSTALL LOWER COVER
12. INSTALL LOWER LH FINISH PANEL
13. INSTALL LOWER CENTER COVER
14. INSTALL LOWER NO. 2 FINISH PANEL
15. INSTALL GLOVE COMPARTMENT PARTS (See page BO–79)

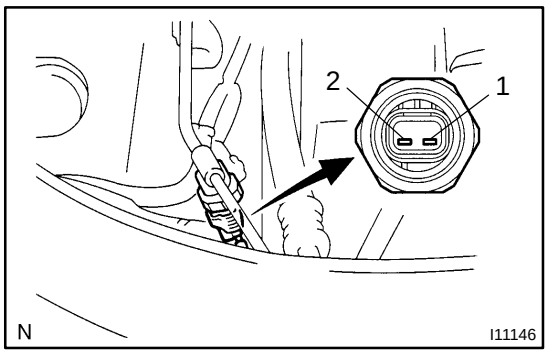

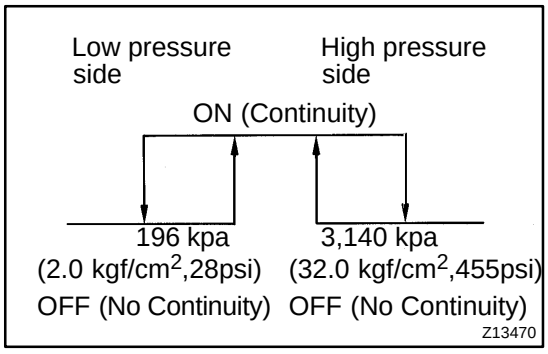

PRESSURE SWITCH

AC0E7–03

ON–VEHICLE INSPECTION

1. **SET ON MANIFOLD GAUGE SET (See page AC–19)**
2. **DISCONNECT CONNECTOR**
3. **RUN ENGINE AT APPROX. 2,000 rpm**
4. **SET BLOWER SPEED CONTROL SWITCH TO ”HI” POSITION**
5. **SET TEMPERATURECONTROL LEVER TO ”MAX. COOL” POSITION**
6. **A/C SWITCH ON**
7. **INSPECT PRESSURE SWITCH OPERATION**

(a) Connect the positive (+) lead from the ohmmeter to terminal 1 and negative (–) lead to terminal 2.

(b) Check continuity between terminals when refrigerant pressure is changed, as shown in the illustration.

If operation is not as specified, replace the pressure switch.

AC0E8–03

REMOVAL

1. DISCHARGE REFRIGERANT FROM REFRIGERATION SYSTEM

HINT:

At the time of installation, please refer to the following item.

Evacuate sir from refrigeration system.

Charge system with refrigerant and inspect for leakage of refrigerant.

Specified amount: 600 ± 50 g (21.16 ± 1.76 oz.)

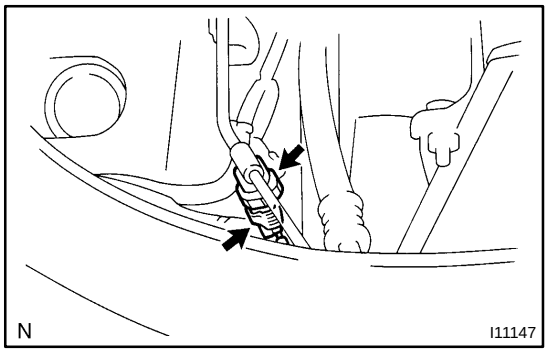

2. REMOVE PRESSURE SWITCH FROM LIQUID TUBE

Disconnect the connector and remove the pressure switch.

Torque: 10 N·m (100 kgf·cm, 7 ft·lbf)

HINT:

- ▲ Lock the switch mount on the tube with an open end wrench, being careful not to deform the tube, and remove the switch.
- ▲ At the time of installation, please refer to the following item.

  Lubricate a new O–ring with the compressor oil and install them to the switch.

AC0E9–01

INSTALLATION

Installation is in the reverse order of remval (See page AC–68).

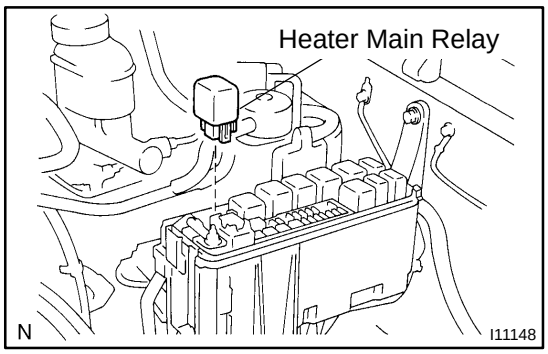

HEATER MAIN RELAY

AC230–02

INSPECTION

1. REMOVE HEATER MAIN RELAY FROM NO. 2 RELAY BLOCK

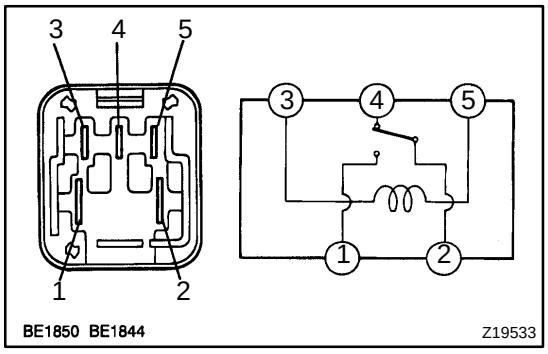

2. INSPECT HEATER MAIN RELAY (Making: HTR) CONTINUITY

Condition	Tester connection	Specified condition
Constant	2 – 4 3 – 5	Continuity
Apply B+ between terminals 3 and 5	1 – 2	Continuity

If continuity is not as specified, replace the relay.

AIR CONDITIONING CONTROL ASSEMBLY (Center Cluster Integration)

AC27D–01

ON–VEHICLE INSPECTION

1. **REMOVE CENTER CLUSTER INTEGRATION PANEL (See page AC–75)**
2. **INSPECT A/C CONTROL ASSEMBLY CIRCUIT**

(a) Disconnect the connector from the A/C control assembly and inspect the connector on the wire harness side, as shown in the chart below.

Test condition:

Turn ignition switch to ON

Wire harness side

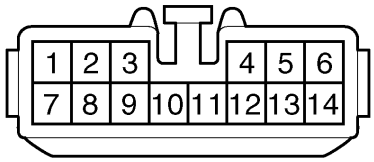

Connector ”A”

I11149
I11150

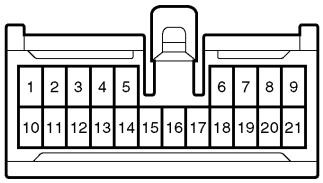

Connector ”B”

I11198

Tester connection	Condition	Specified condition
A1 – Ground	Constant	Continuity
A4 – Ground	Turn ignition switch to ON	Battry positive voltage
	Turn ignition switch to OFF	No voltage
A5 – Ground	Constant	Battry positive voltage
A13 – Ground	Turn ignition switch to ACC.	Battery positive voltage
	Turn ignition switch to OFF	No voltage
B11 – Ground (5VZ–FE engine)	Constant	Continuity
B20 – B10	Evaporator temperature at 25 °C (77 °F)	1.5 kΩ

If circuit is as specified, try replacing the amplifier with a new one. If the circuit is not as specified, inspect the circuits connected to other parts.

(b) Connect the connector to A/C control assembly and inspect wire harness side from the back side, as shown in the chart below.
Test condition:
- ▲ Run engine at idle speed
- ▲ Set on manifold gauge set

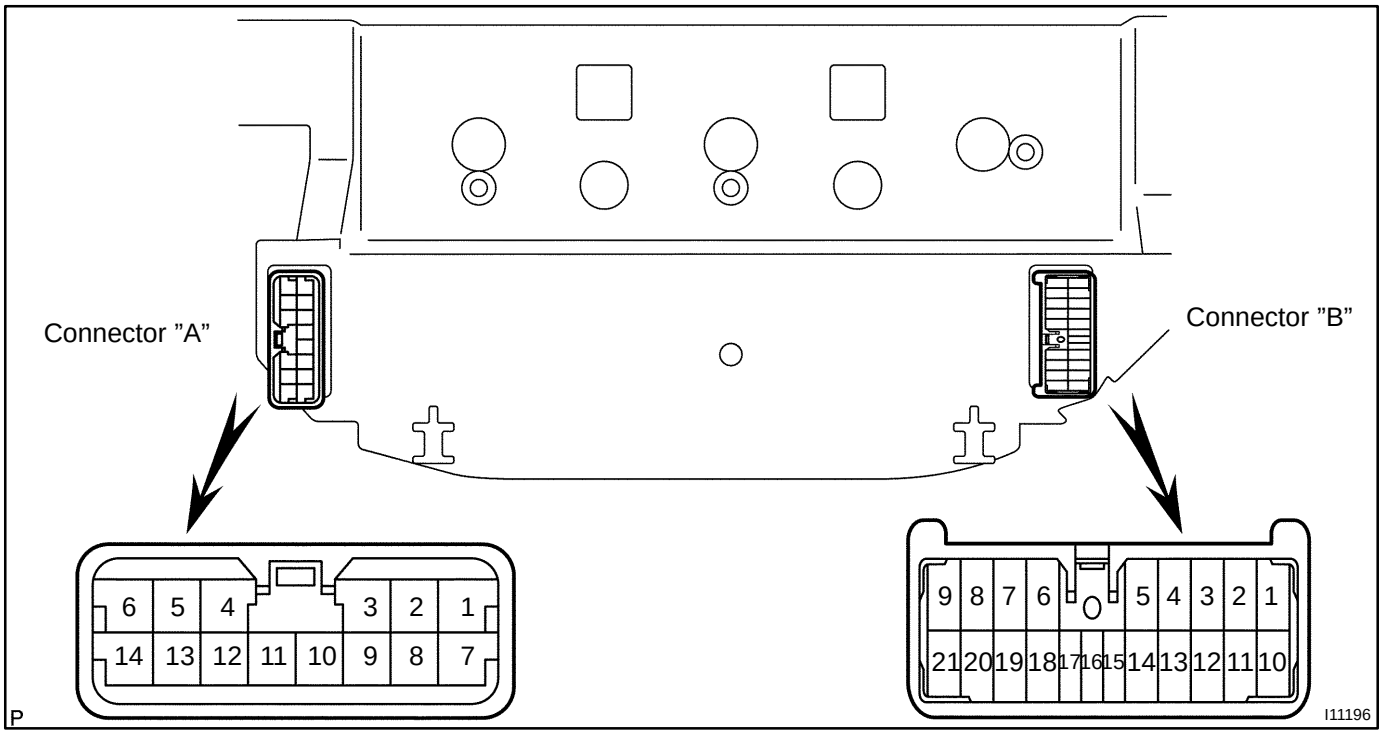

Tester connection	Condition	Specified condition
A2 – Ground	Diff. lock switch ”2WD/4HI” ON	Below 1.0 V
	Diff. lock switch ”4LO” ON	Battery positive voltage
A3 – Ground	Diff. lock switch ”4LO” ON	Below 1.0 V
	Diff. lock switch ”2WD/4HI” ON	Battry positive voltage
A8 – Ground	Constant	Continuity
A10 – A9	Mode selector ”DEF. or F/DEF.” position	No voltage
	Mode selector except ”DEF. or F/DEF.” position	Battery positive voltage
A11 – Ground	Blower switch ON	Battery positive voltage
A11 – B6	Refrigerant pressure at 196 – 3,140 kPa	Battery positive voltage
	Refrigerant pressure at less than 196 kPa or more than 3,140 kPa	No voltage
A12 – Ground	Blower switch ON	Battery positive voltage
	Blower switch OFF	No voltage
A14 – Ground	Turn ignition switch to ”ACC”	Battery positive voltage
B3 – Ground	Airbag cut off switch ON	Continuity
B3 – B1	Passenger airbag cutoff switch ON	Below 1.0 V
	Passenger airbag cutoff switch OFF	Battery positive voltage

B4 – Ground	Transfer gear switch ”HI–LO” ON	Below 1.0 V
	Transfer gear switch ”HI–LO” OFF	Battery positive voltage
B5 – Ground	Transfer gear switch ”4 x 4” ON	Below 1.0 V
	Transfer gear switch ”4 x 4” OFF	Battery positive voltage
B7 – Ground	Light control switch ON	Battery positive voltage
	Light control switch OFF	No voltage
B8 – Ground	Magnetic clutch is engaged	Battery positive voltage
	Magnetic clutch is not engaged	No voltage
B9 – Ground	Cargo lamp ON	Battery positive voltage
	Cargo lamp OFF	No voltage
B12 – Ground	Cargo lamp ON	Below 1.0 V
	Cargo lamp OFF	No voltage
B13 – Ground	Air inlet switch ”FRESH”	Below 1.0 V
	Air inlet switch ”RECIRC”	Battery positive voltage
B15 – Ground	Air inlet switch ”RECIRC”	Below 1.0 V
	Air inlet switch ”FRESH”	Battery positive voltage
B17 – Ground	Hazard warning switch ON	Below 1.0 V
	Hazard warning switch OFF	Battery positive voltage
B18 – Ground	A/C switch ON	No voltage
B19 – Ground	A/C switch ON	Below .1.0 V
	A/C switch OFF	Battery positive voltage

If circuit is as specified, try replacing the amplifier with a new one. If the circuit is not as specified, inspect the circuits connected to other parts.

AC27N–01

COMPONENTS

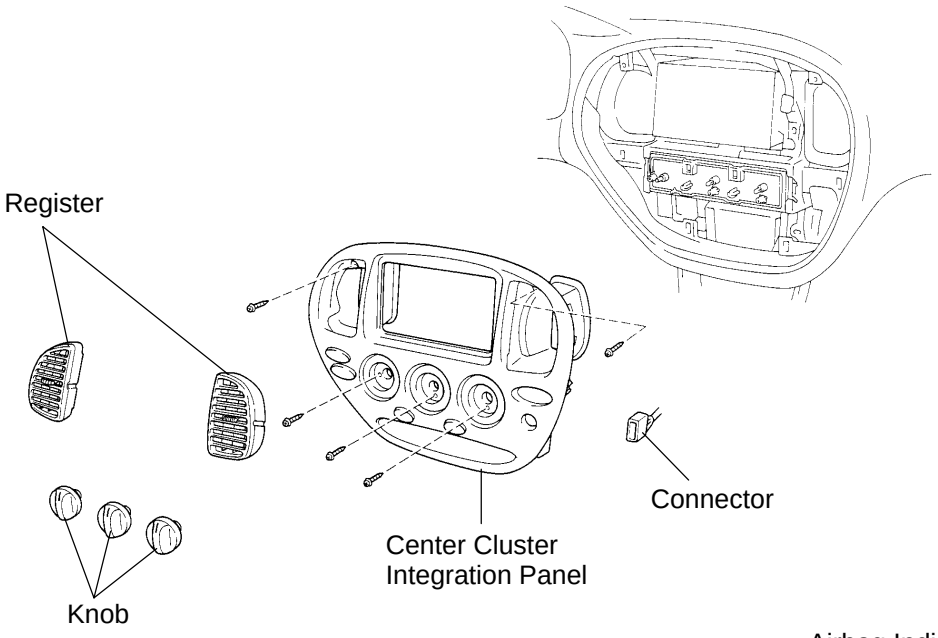

N

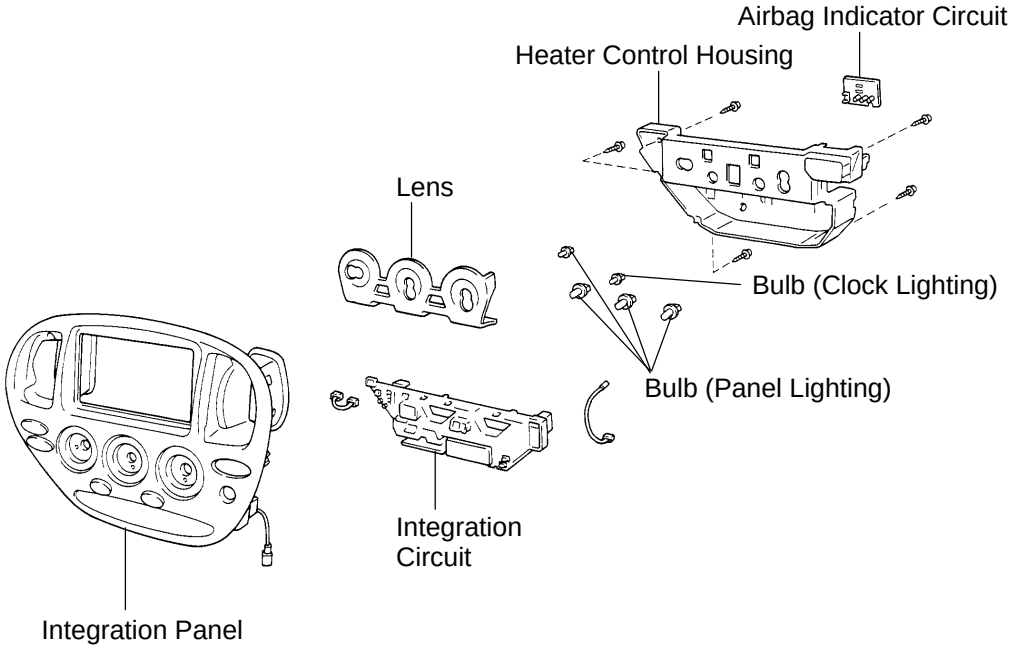

I11181
I11182

N

I11200

AC27E–01

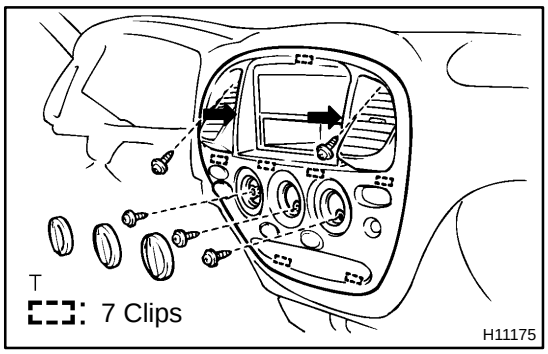

REMOVAL

REMOVE CENTER CLUSTER INTEGRATION PANEL

(a) Remove the 3 heater control knobs.
(b) Remove the 5 screws.
(c) Remove integration control panel by pulling the portions indicated by arrows in the illustration.
(d) Disconnect the connector.

AC27F–01

DISASSEMBLY

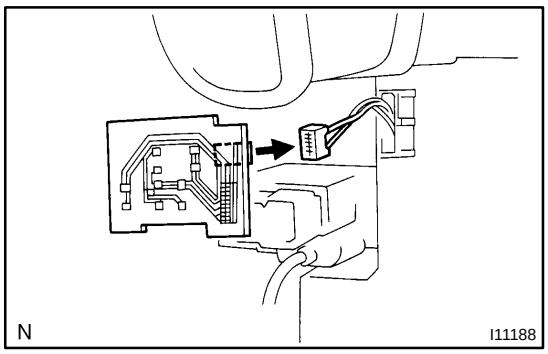

1. REMOVE AIRBAG INDICATOR CIRCUIT

Release the 2 claws and remove the indicator circuit, then disconnect the connecor.

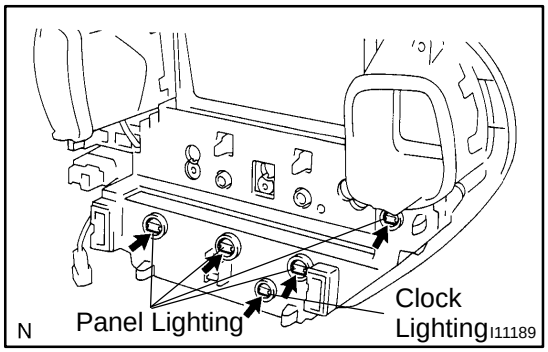

2. REMOVE BULBS

Remove the 5 bulbs.

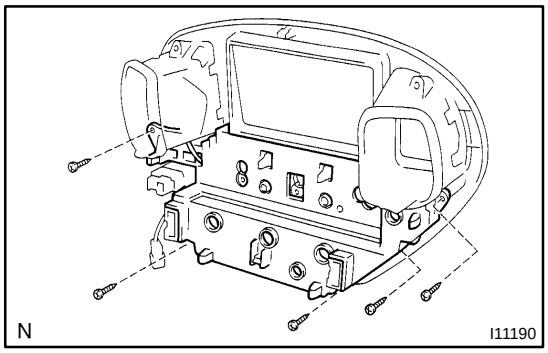

3. REMOVE HEATER CONTROL HOUSING

(a) Remove the 5 screws.

(b) Remove the heater control housing.

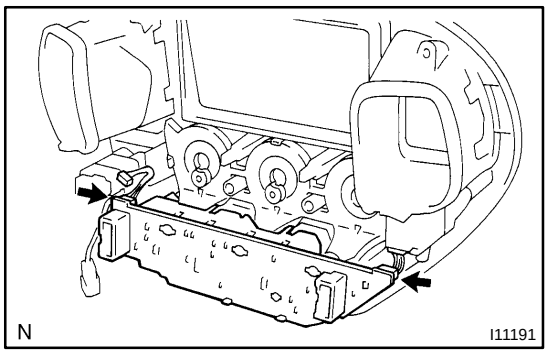

4. REMOVE INTEGRATION CIRCUIT

(a) Disconnect the 2 connectors.

(b) Remove the circuit.

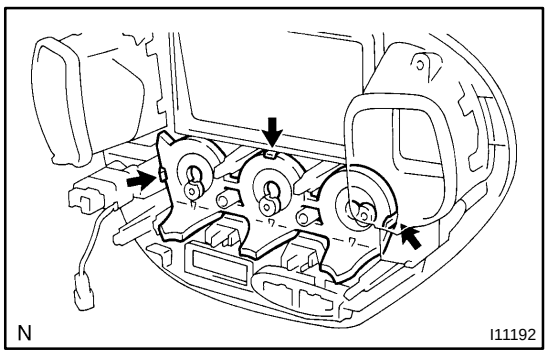

5. REMOVE LENS

Release the 3 claws, then remove the lens.

AC27G–01

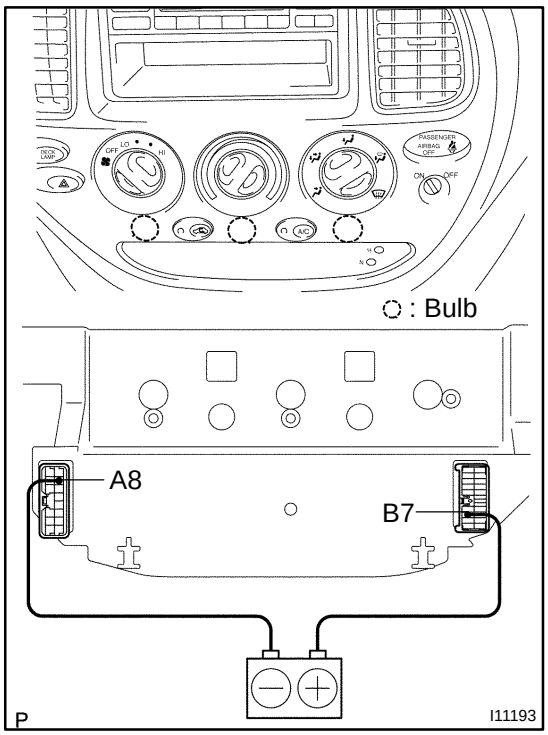

INSPECTION

1. INSPECT ILLUMINATION OPERATION

Connect the positive (+) lead from the battery to terminal B7 and negative (–) lead to terminal A8 then check that the illuminations lights up.

If operation is not as specified, check the faulty bulb.

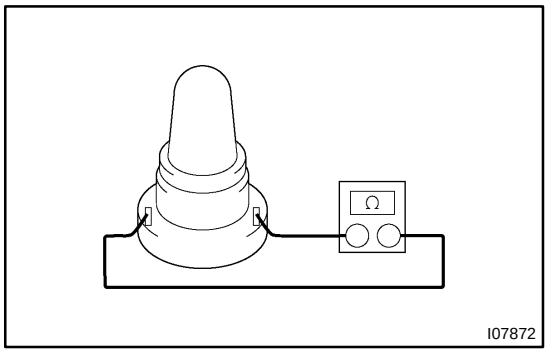

2. INSPECT BULB

Apply the tester as shown in the illustration to the test for continuity.

If continuity exists, replace the heater control.

If no continuity exists, replace the bulb.

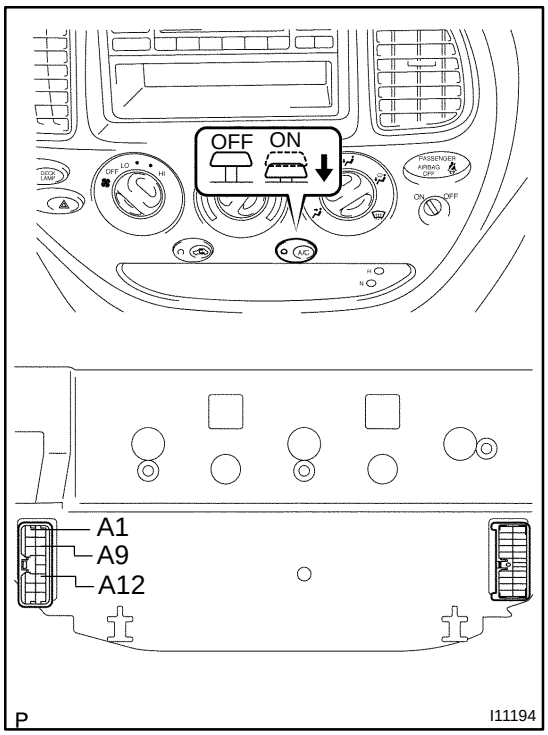

3. INSPECT A/C SWITCH CONTINUITY

Condition / Circuit	Tester connection	Specified condition
OFF	A12 – A9	No continuity
ON	A12 – A9	Continuity

If operation is not as specified, replace integration circuit bulb.

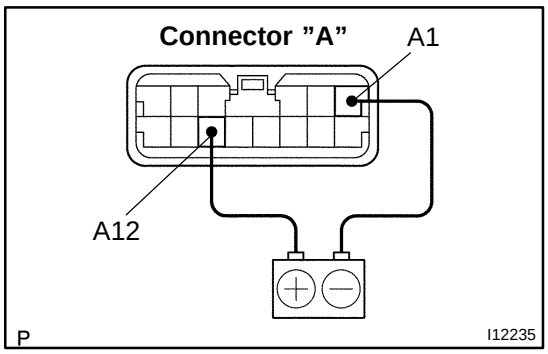

4. INSPECT A/C INDICATOR OPERATION

(a) Connect the positive (+) lead from the battery to terminal A12 and negative (–) lead to A1.

(b) Push the A/C button in and check that the A/C indicator lights up.

If operation is not as specified, replace the integration circuit.

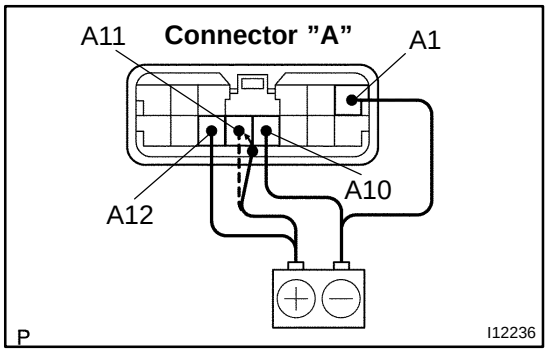

(c) Connect the positive (+) lead from the battery to terminal A11 and negative (–) lead to terminal A10, then check that the indicator dimes.

If operation is not as specified, replace the integration circuit.

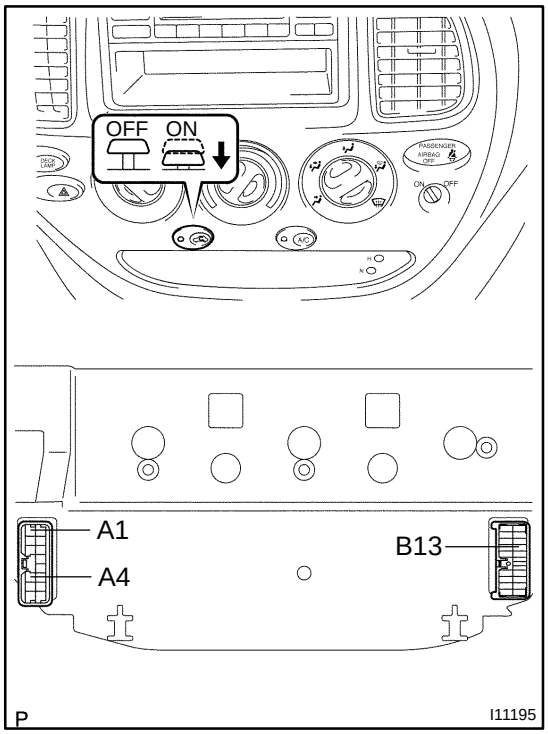

5. INSPECT AIR INLET CONTROL SWITCH CONTINUTY

Condition / Circuit	Tester connection	Specified condition
OFF	B13 – A1	No continuity
ON	B13 – A1	Continuity
Illumination circuit	A4 – B13	Continuity

If operation is not as specified, replace integration circuit bulb

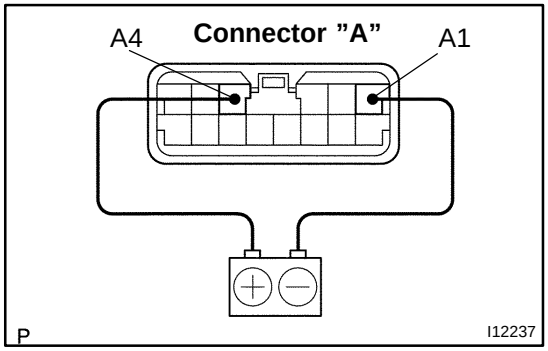

6. INSPECT AIR INLET INDICATOR OPERATION

(a) Connect the positive (+) lead from the battery to terminal A4 and negative (–) lead to A1.

(b) Push the air inlet button in and check that the air inlet indicator lights up.

If operation is not as specified, replace the integration circuit.

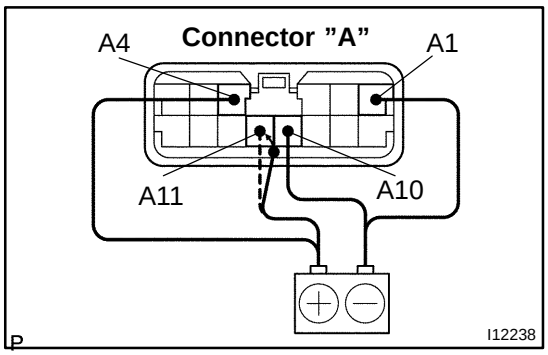

(c) Connect the positive (+) lead from the battery to terminal A11 and negative (–) lead to terminal A10, then check that the indicator dimes.

If operation is not as specified, replace the integration circuit.

AC27H–01

REASSEMBLY

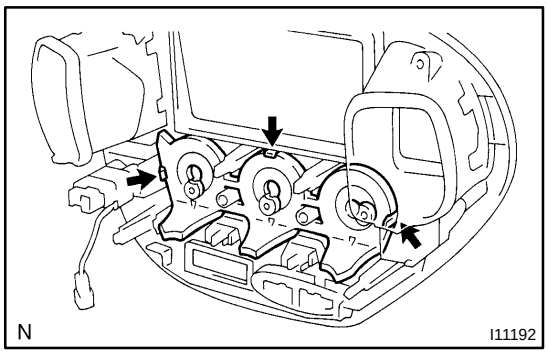

1. INSTALL LENS

Install the lens.

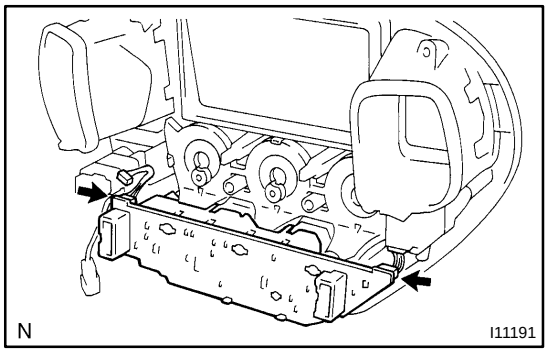

2. INSTALL INTEGRATION CIRCUIT

(a) Connect the 2 connectors.

(b) Install the circuit.

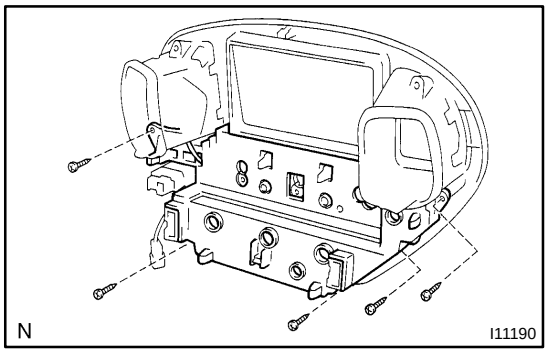

3. INSTALL HEATER CONTROL HOUSING

(a) Connect theconnector.

(b) Install theheater control housing.

(c) Install the 5 screws.

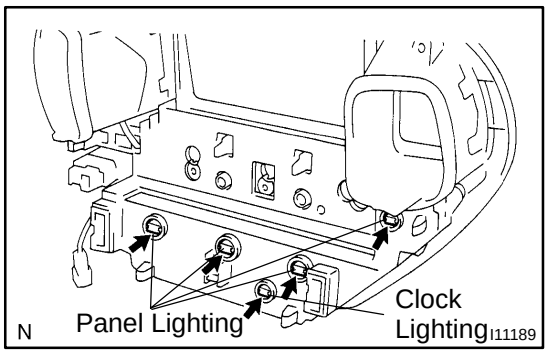

4. INSTALL BULBS

Install the 5 bulbs.

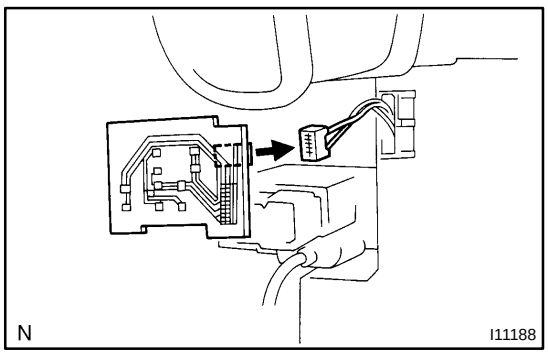

5. INSTALL AIRBAG INDICATOR CIRCUIT

(a) Connect the connector.

(b) Install the circuit.

AC27I–01

INSTALLATION

Installation is in the reverse order of removal (See page AC–75).

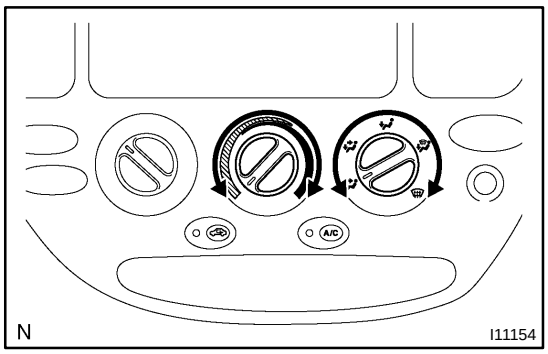

HEATER CONTROL ASSEMBLY

AC27J–01

ON–VEHICLE INSPECTION

INSPECT HEATER CONTROL DIAL AND LEVER OPERATION

Move the control dial and lever left to right and check for stiffness and binding through the full range of the levers.

If click sound can not be heard or recoil is felt, adjust the control cable or check control cable and heater control assembly.

AC06V–02

COMPONENTS

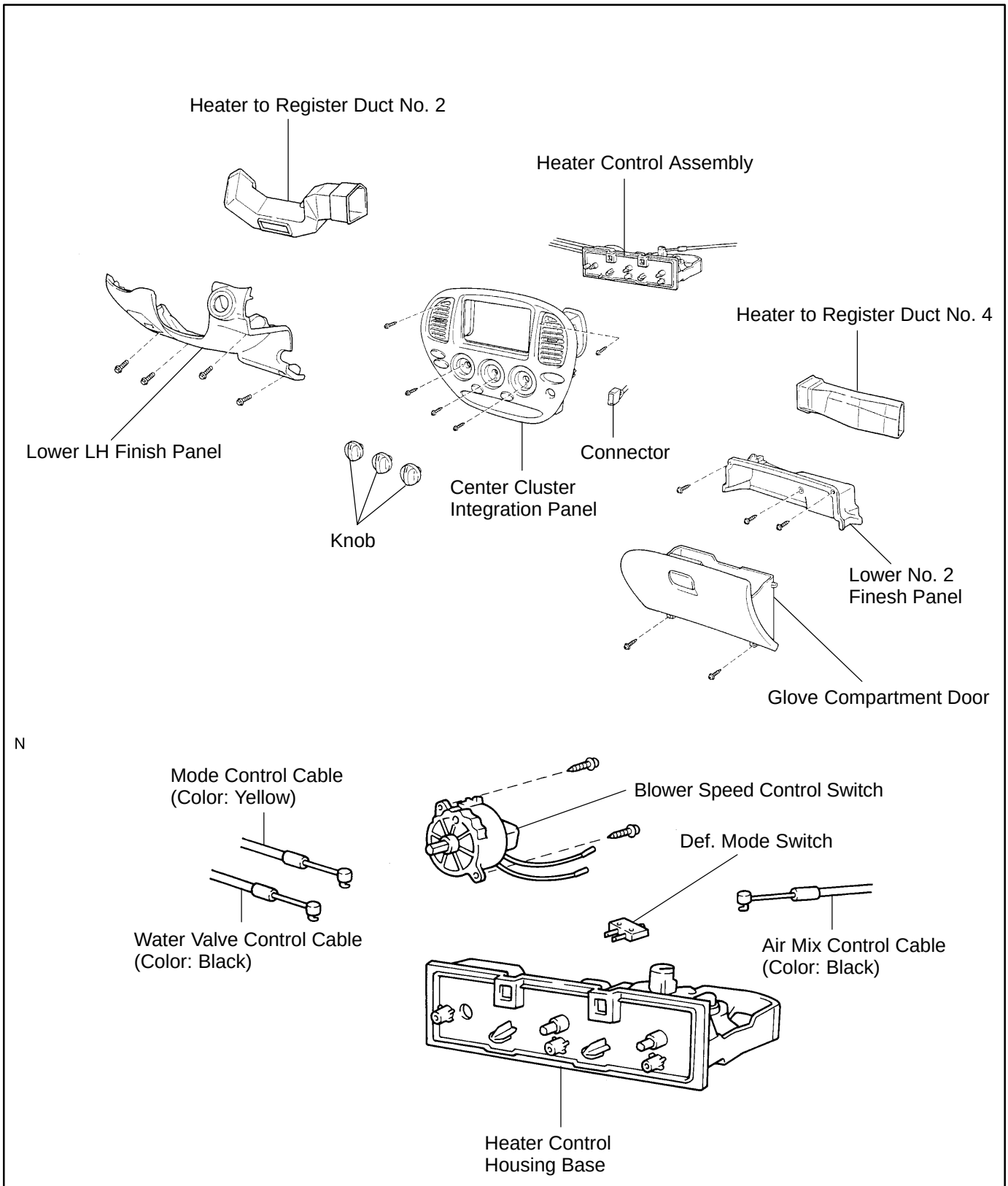

AC27O–01

REMOVAL

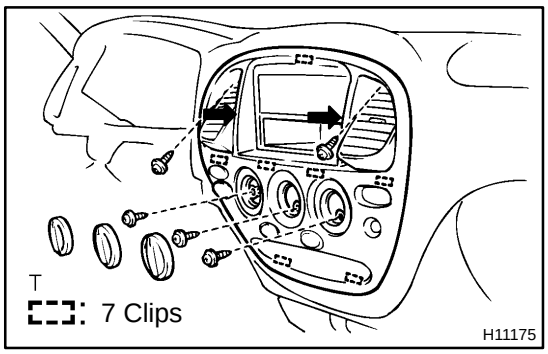

1. REMOVE CENTER CLUSTER INTEGRATION PANEL

(a) Remove the 3 heater control knobs.

(b) Remove the 5 screws.

(c) Remove integration control panel by pulling the portions indicated by arrows in the illustration.

(d) Disconnect the connector.

2. REMOVE LOWER LH FINISH PANEL

3. REMOVE HEATER TO REGISTER DUCT NO. 2

4. REMOVE GLOVE COMPARTMENT DOOR

5. REMOVE LOWER NO. 2 FINISH PANEL

6. REMOVE HEATER TO REGISTER DUCT NO. 4 (See page BO–72)

7. DISCONNECT HEATER CONTROL CABLES

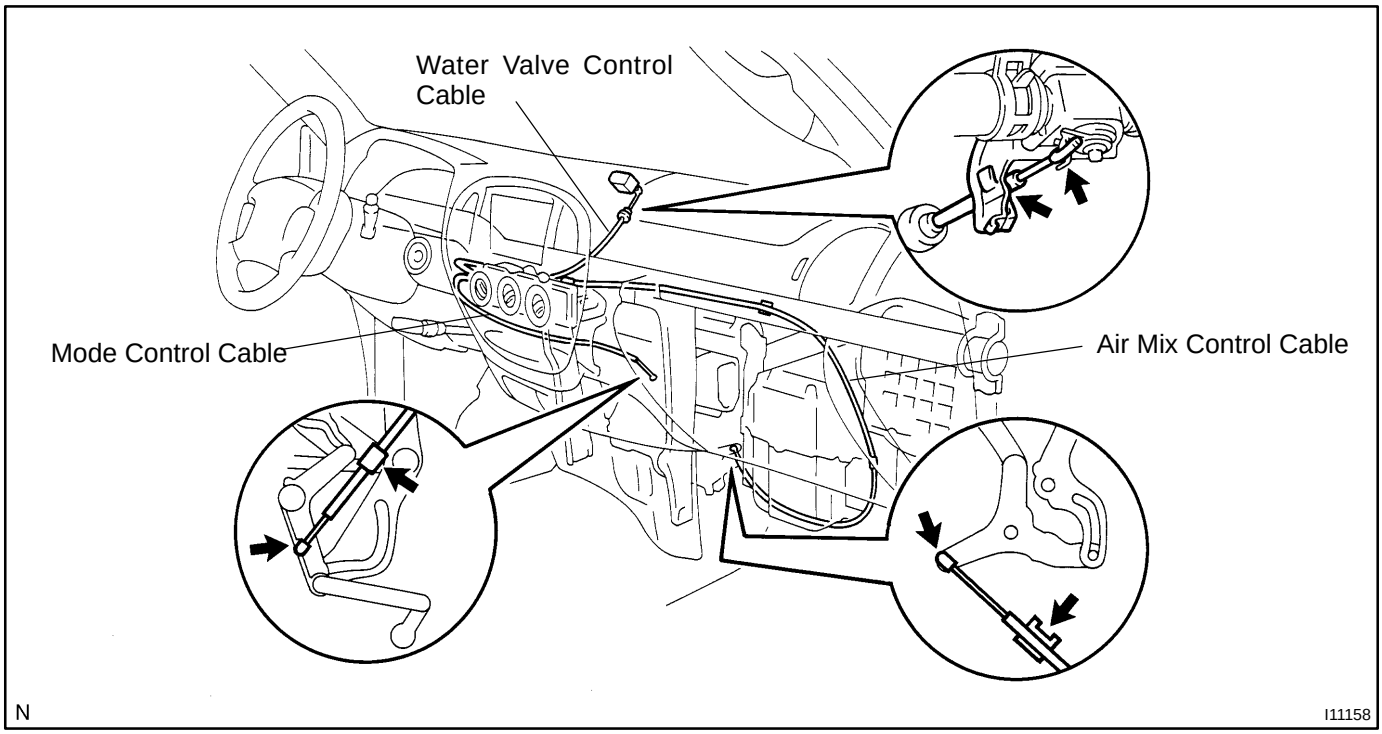

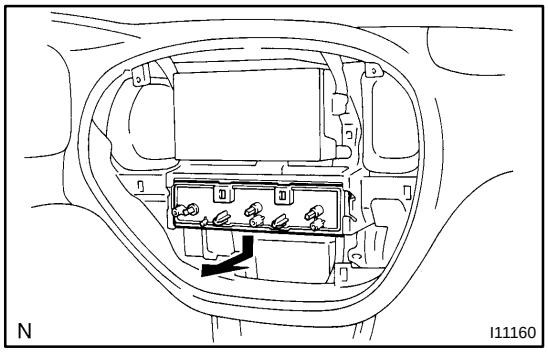

8. REMOVE HEATER CONTROL ASSEMBLY

Remove the heater control assembly, then disconnect the connectors.

AC27K–01

DISASSEMBLY

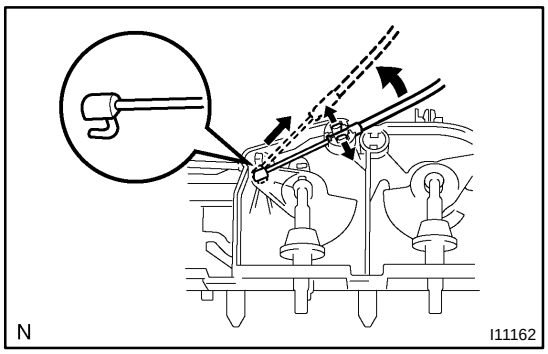

1. REMOVE HEATER CONTROL CABLES

(a) Using a screwdriver, spread the claw of the cable clamp and disconnect the outer cable.

HINT:

Tape the screwdriver tip before use.

(b) Remove the inner cable from the heater control assembly.

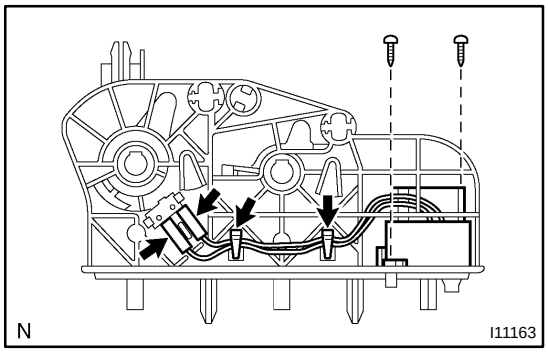

2. REMOVE BLOWER SPEED CONTROL SWITCH

(a) Disconnect the connector.

(b) Remove the 2 screws.

(c) Remove the switch.

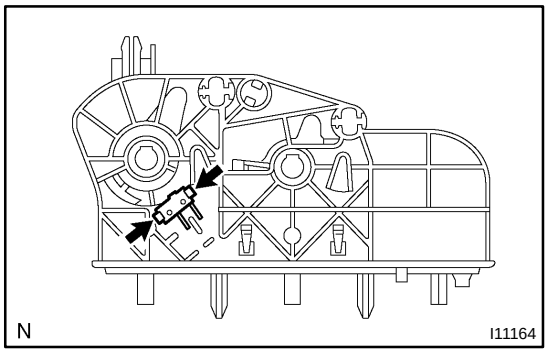

3. REMOVE DEF. MODE SWITCH

Release the 2 claws, then remove the switch.

HINT:

Tape the screwdriver tip before use.

AC27L–01

INSPECTION

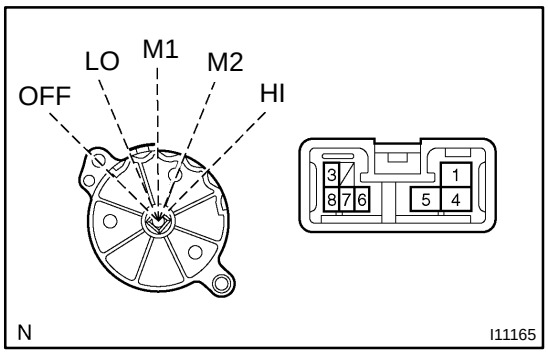

1. INSPECT BLOWER SPEED CONTROL SWITCH CONTINUITY

Position/ Circuit	Tester connection	Specified condition
OFF	–	No continuity
LO	1 – 3	Continuity
M1	1 – 3 – 4	Continuity
M2	1 – 3 – 8	Continuity
HI	1 – 3 – 5	Continuity
Illumination circuit	6 – 7	Continuity

If continuity is not as specified, replace the switch and check bulb.

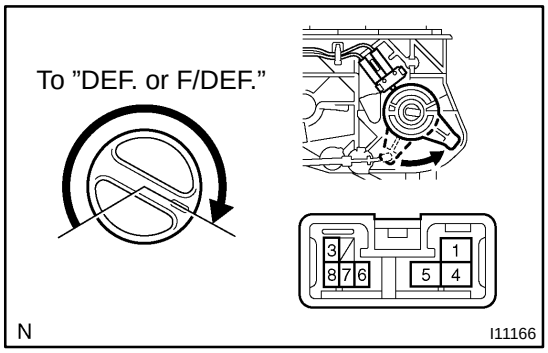

2. INSPECT DEF. MODE SWITCH

(a) Check the continuity exists between terminals 1 and 3 of blower switch connector, when turn the mode selector to DEF. position and F/DEF. position.

If no continuity exists, proceed next step.

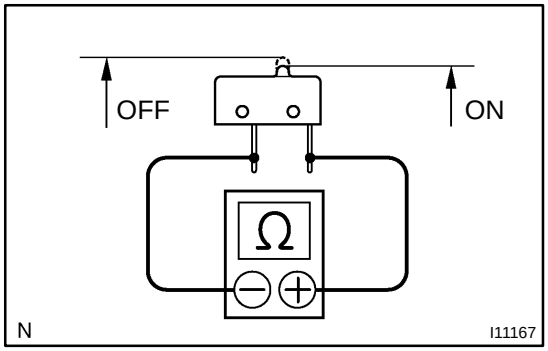

(b) Check the continuity exists between terminals of A/C mode swich.

If no continuity exists, replace the A/C mode switch.

If continuity exists, check or replace heater control housing base.

AC27M–01

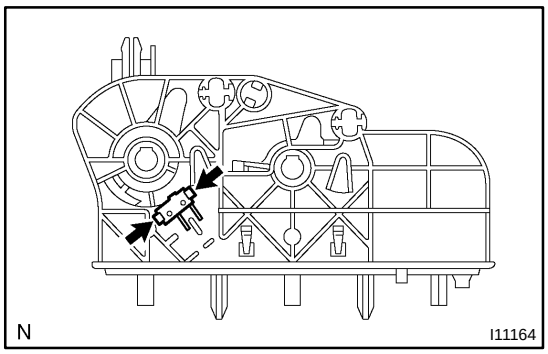

REASSEMBLY

1. INSTALL DEF. MODE SWITCH

Install the switch.

HINT:

After installation, check the fitting 2 claws.

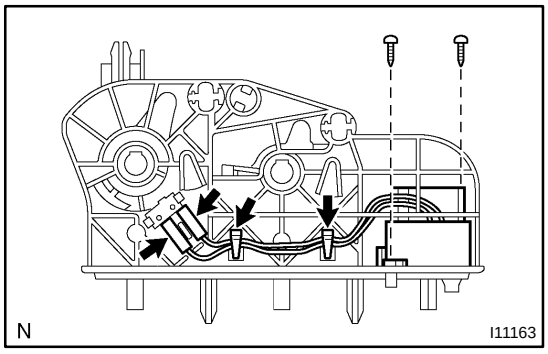

2. INSTALL BLOWER SPEED CONTROL SWITCH

(a) Install the switch with the 2 screws.

(b) Connect the connector.

3. INSTALL HEATER CONTROL CABLES

Install the heater control cables to the heater control assembly.

AC27P–01

INSTALLATION

1. INSTALL HEATER CONTROL ASSEMBLY

(a) Connect the connectors.

(b) Pass the heater control as shown in the illustration.

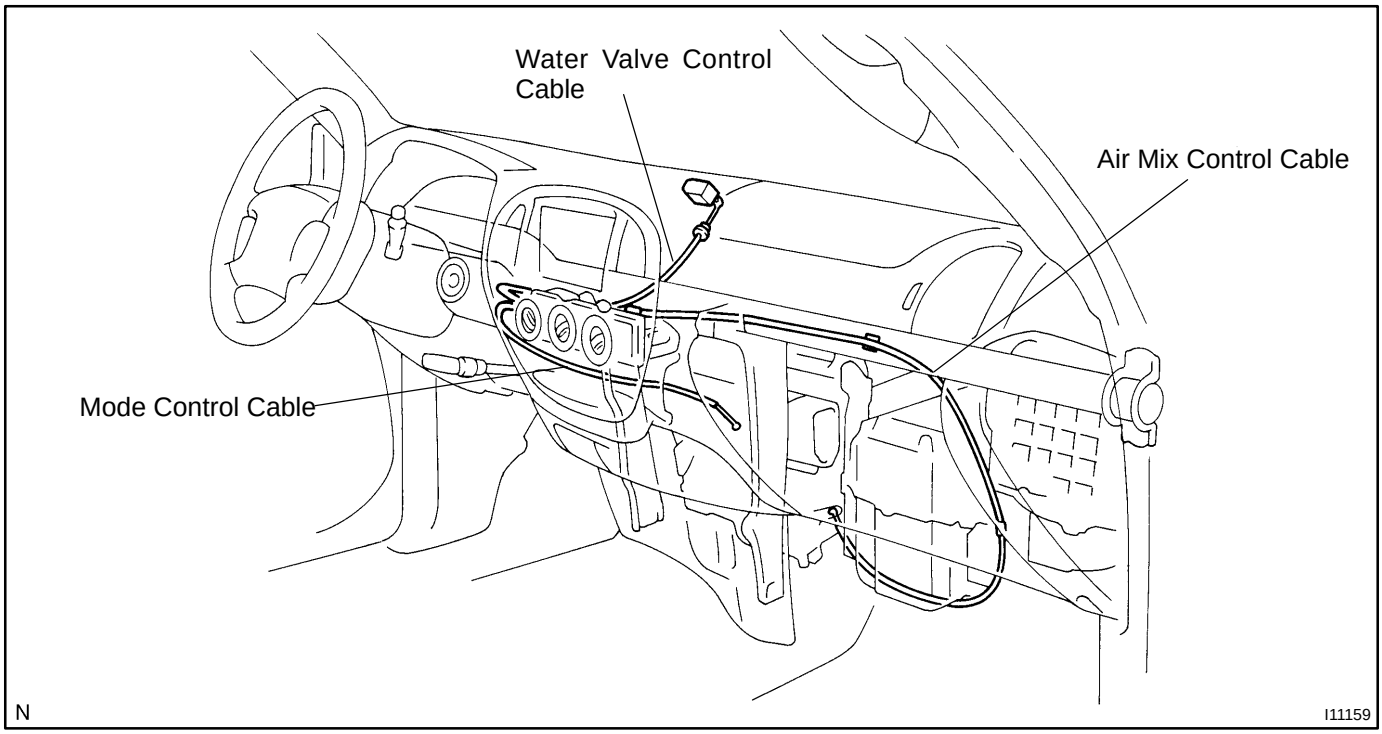

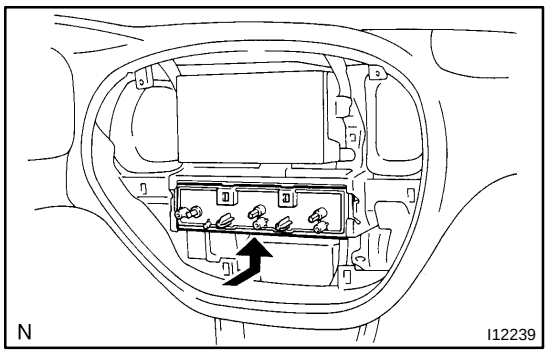

(c) When using the removed one:
Install the heater control assembly.

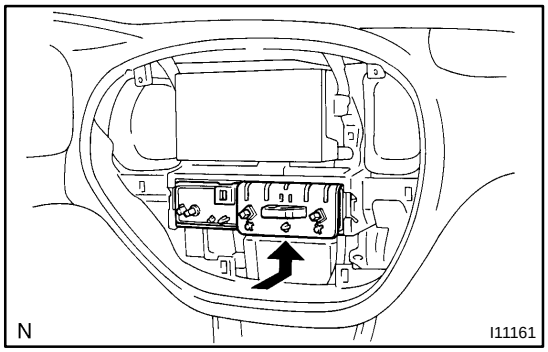

(d) When using a new one:
Install the heater control assembly.

2. ADJUST HEATER CONTROL CABLES

(a) Set the mode control dial at ”FACE” position.

(b) Set the temperature control dial at ”MAX. COOL” position.

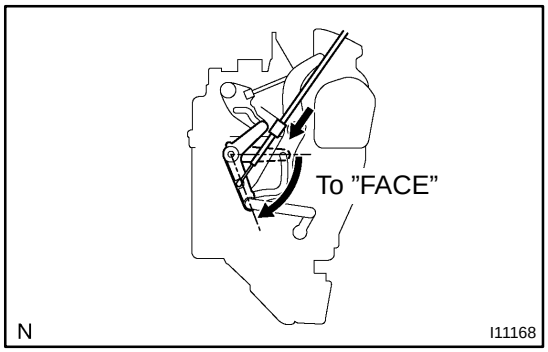

(c) Adjust mode control cable.
Pull the air inlet control link to ”FACE” position, connect the control cable and lock the clamp.

HINT:

Lock the clamp during lightly pulling the outer cable in the direction, as shown in the illustration by an arrow.

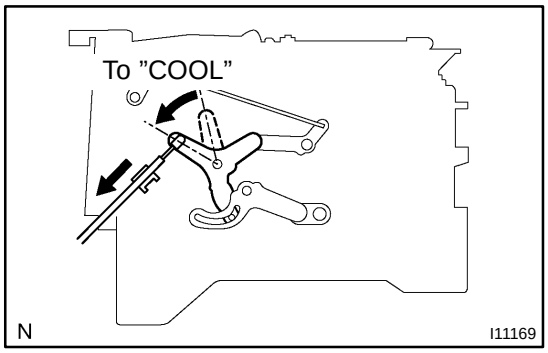

(d) Adjust air mix control cable.
Pull the air inlet control link to ”COOL” position, connect the control cable and lock the clamp.

HINT:

Lock the clamp during lightly pushing the outer cable in the direction as shown in the illustration by an arrow.

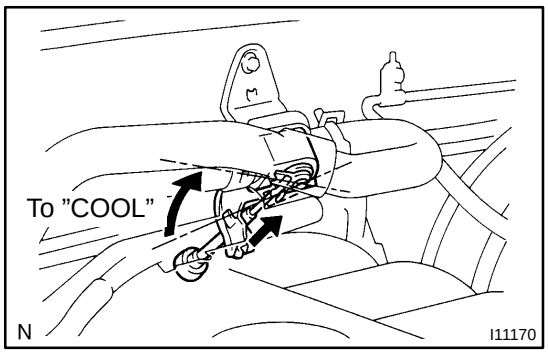

(e) Adjust water valve control cable.
Pull the air inlet control link to ”COOL” position, connect the control cable and lock the clamp.

HINT:

Lock the clamp during lightly pushing the outer cable in the direction, as shown in the illustration by an arrow.

3. INSTALL HEATER TO REGISTER DUCT NO. 4

4. INSTALL LOWER NO. 2 FINISH PANEL

5. INSTALL GLOVE COMPARTMENT PANEL

6. INSTALL HEATER TO REGISTER DUCT NO. 2

7. INSTALL LOWER LH FINISH PANEL

(See page BO–79)

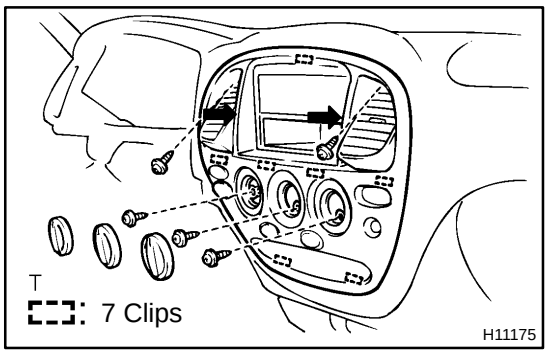

8. INSTALL CENTER CLUSTER INTEGRATION PANEL

(a) When replacing the heater control assembly:
Pull off the cover.

(b) Install the center cluster integration panel, then connect the 2 connectors.

(c) Install the 5 screws.

(d) Install the 3 heater control knobs.

SRS AIRBAG

RS01Y–30

PRECAUTION

NOTICE:

- **The TOYOTA TUNDRA is equipped with SRS, which comprises a driver airbag and front passenger airbag. Failure to carry out service operations in the correct sequence could cause the SRS to unexpectedly deploy during servicing, possibly leading to a serious accident. Further, if a mistake is made in servicing the SRS, it is possible that the SRS may fail to operate when required. Before performing servicing (including removal or installation of parts, inspection or replacement), be sure to read the following items carefully, then follow the correct procedures described in the repair manual.**
- **Malfunction symptoms of the SRS are difficult to confirm, so the DTCs become the most important source of information when troubleshooting. When troubleshooting the SRS, always inspect the DTCs before disconnecting the battery.**
- **Even in cases of a minor collision where the SRS does not deploy, the steering wheel pad, front passenger airbag assembly, airbag sensor assembly and front airbag sensor should be inspected (See page RS–12, RS–26, RS–37 and RS–42).**
- **Never use SRS parts from another vehicle. When replacing parts, replace them with new parts.**
- **Never disassemble and repair the steering wheel pad, front passenger airbag assembly, airbag sensor assembly or front airbag sensor in order to reuse it.**
- **If the steering wheel pad, front passenger airbag assembly, airbag sensor assembly or front airbag sensor has been dropped, or if there are cracks, dents or other defects in the case, bracket or connector, replace them with new ones.**
- **Use a volt/ohmmeter with high impedance (10 kΩ/V minimum) for troubleshooting the system's electrical circuits.**
- **Information labels are attached to the periphery of the SRS components. Follow the instructions on the notices.**
- **After work on the SRS is completed, perform the SRS warning light check (See page DI–490).**
- **If the vehicle is equipped with a mobile communication system, refer to the precaution in the IN section.**

CAUTION:

- **Work must be started 90 seconds after the ignition switch is turned to the "LOCK" position and the negative (–) terminal cable is disconnected from the battery**
  (The SRS is equipped with a back–up power source so that if work is started within 90 seconds from disconnecting the negative (–) terminal cable of the battery, the SRS may be deployed.).
- **When the negative (–) terminal cable is disconnected from the battery, the memory of the clock and audio system will be canceled. So before starting work, make a record of the contents memorized in the audio memory system. When work is finished, reset the audio systems as they were before and adjust the clock. However, it is not possible to make a record of the memory contents. So when the work is finished, it will be necessary to explain this fact to the customer, and ask the customer to adjust the features and reset the memory. To avoid erasing the memory in each memory system, never use a back–up power supply from outside the vehicle.**
- **Before repairs, remove the airbag sensor if shocks are likely to be applied to the sensor during repairs.**
- **Do not expose the steering wheel pad, front passenger airbag assembly, airbag sensor assembly or front airbag sensor directly to hot air or flames.**

RS0HY–02

OPERATION

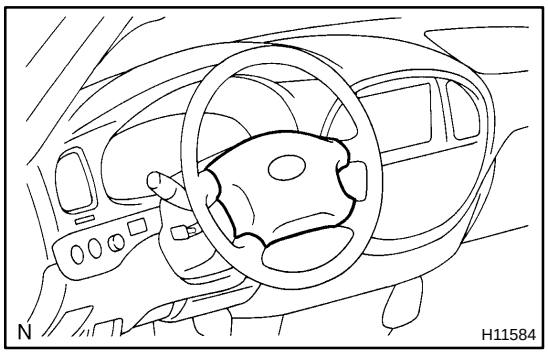

1. STEERING WHEEL PAD (with AIRBAG)

The inflater and bag of the SRS are stored in the steering wheel pad and cannot be disassembled. The inflater contains a squib, igniter charge, gas generant, etc., and inflates the bag when instructed by the airbag sensor assembly.

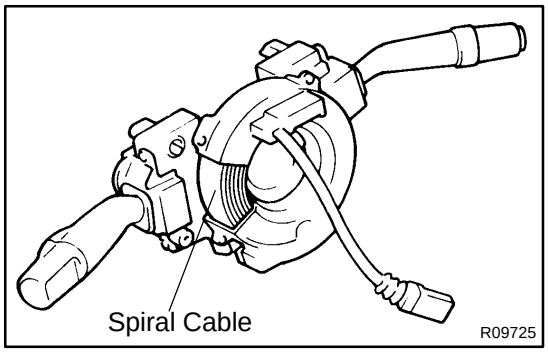

2. SPIRAL CABLE (in COMBINATION SWITCH)

A spiral cable is used as an electrical joint from the vehicle body side to the steering wheel.

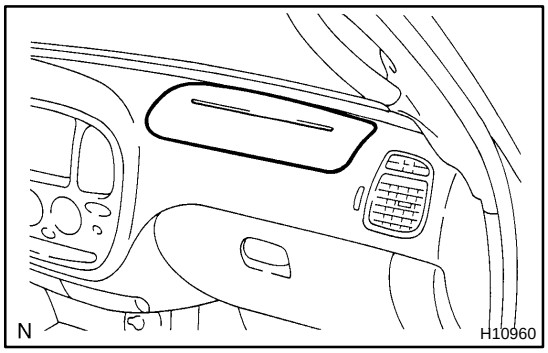

3. FRONT PASSENGER AIRBAG ASSEMBLY

The inflater and bag of the SRS are stored in the front passenger airbag assembly and cannot be disassembled. The inflater contains a squib, igniter charge and gas generator, etc., and inflates the bag when instructed by the airbag sensor assembly.

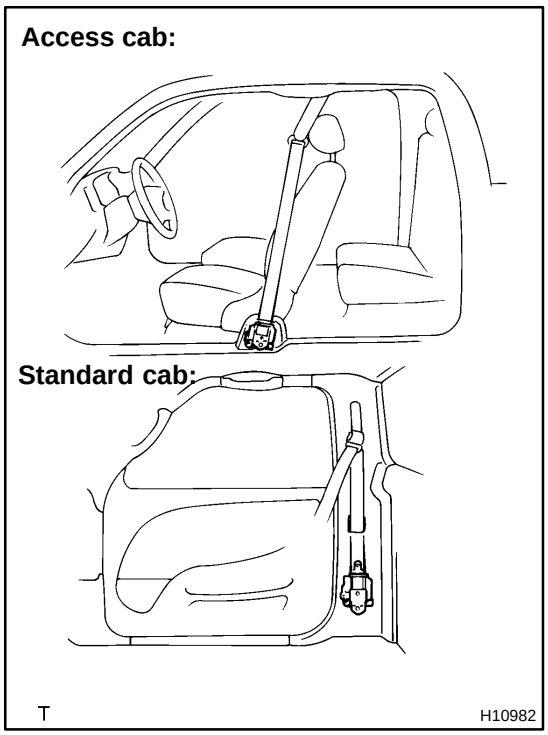

4. SEAT BELT PRETENSIONER

The seat belt pretensioner system is a component of the front seat outer belt. The pretensioner operates in the event of a frontal collision. The seat belt pretensioner cannot be disassembled.

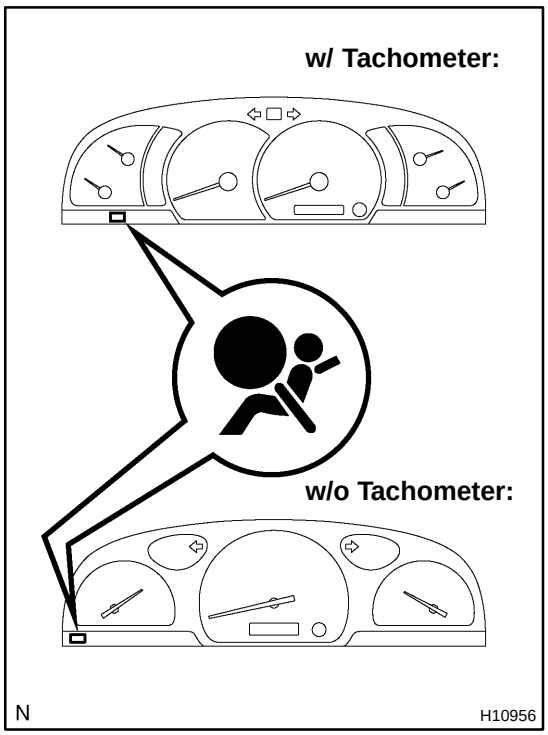

5. SRS WARNING LIGHT

The SRS warning light is located on the combination meter. It goes on to alert the driver of trouble in the system when a malfunction is detected in the airbag sensor assembly self–diagnosis. In normal operation conditions when the ignition switch is turned to the ACC or ON position, the light goes on for about 6 seconds and then goes off.

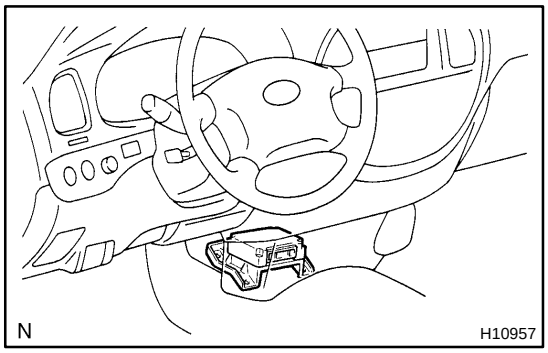

6. AIRBAG SENSOR ASSEMBLY

The airbag sensor assembly is mounted on the floor inside the lower center cover. The airbag sensor assembly consists of an airbag sensor, safing sensor, diagnosis circuit, ignition control and drive circuit, etc. It receives signals from the airbag sensor and judges whether the SRS must be activated or not.

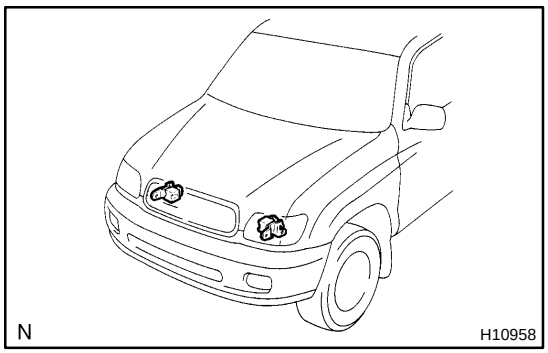

7. FRONT AIRBAG SENSOR

The front airbag sensor is mounted inside each of the aprons. The sensor unit is a mechanical type. When the sensor detects deceleration force above a predetermined limit, contact is made in the sensor, sending a signal to the airbag sensor assembly. The sensor cannot be disassembled.

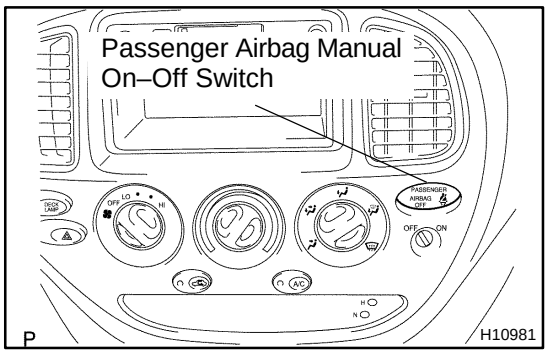

8. PASSENGER AIRBAG MANUAL ON–OFF SWITCH

Passenger airbag manual on–off switch is mounted on the center cluster finish panel. By turning the passenger airbag manual on–off switch to OFF with the ignition key, the passenger airbag system can be disabled. Also, in order to notify the passenger that the front passenger airbag is disabled, OFF indicator inside the switch will light up.

Switch Position	Passenger Airbag	Indicator Light
ON	Operative	OFF
OFF	Disabled	ON

9. SRS CONNECTORS

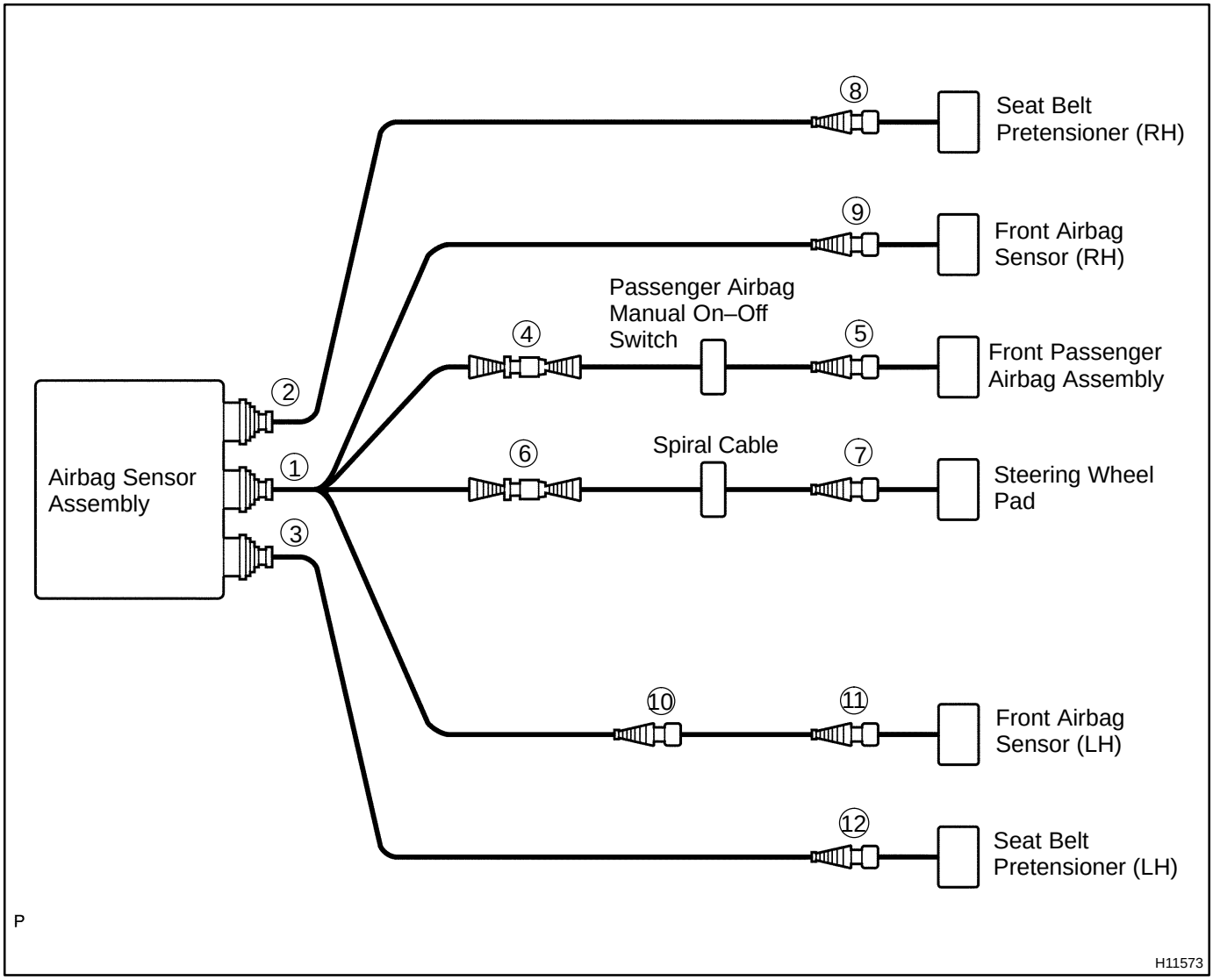

No.	Item	Application
(1)	Terminal Twin–Lock Mechanism	Connectors 1, 2, 3, 4, 5, 6, 7, 8, 9, 10, 11, 12
(2)	Airbag Activation Prevention Mechanism	Connectors 1, 2, 3, 4, 5, 6, 7, 8, 12
(3)	Electrical Connection Check Mechanism	Connectors 1, 2, 3
(4)	Connector Twin–Lock Mechanism	Connector 6

(a) All connectors in the SRS are colored in yellow to distinguish them from other connectors. Connectors having special functions and specifically designed for the SRS are used in the locations shown on this page to ensure high reliability. These connectors use durable gold–plated terminals.

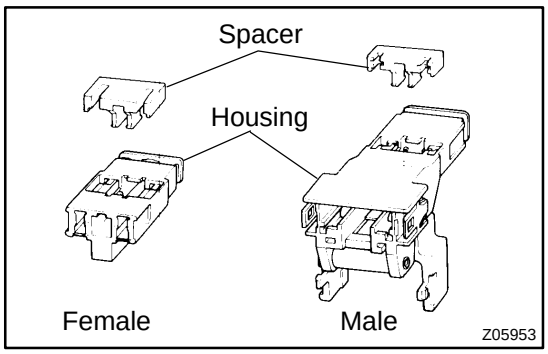

(1) Terminal twin–lock mechanism
Each connector has a two–piece component consisting of a housing and a spacer. This design enables the terminal to be locked securely by two locking devices (the retainer and the lance) to prevent terminals from coming out.

(2) Airbag activation prevention mechanism
Each connector contains a short spring plate. When the connector is disconnected, the short spring plate automatically connects positive (+) terminal and negative (–) terminal of the squib.

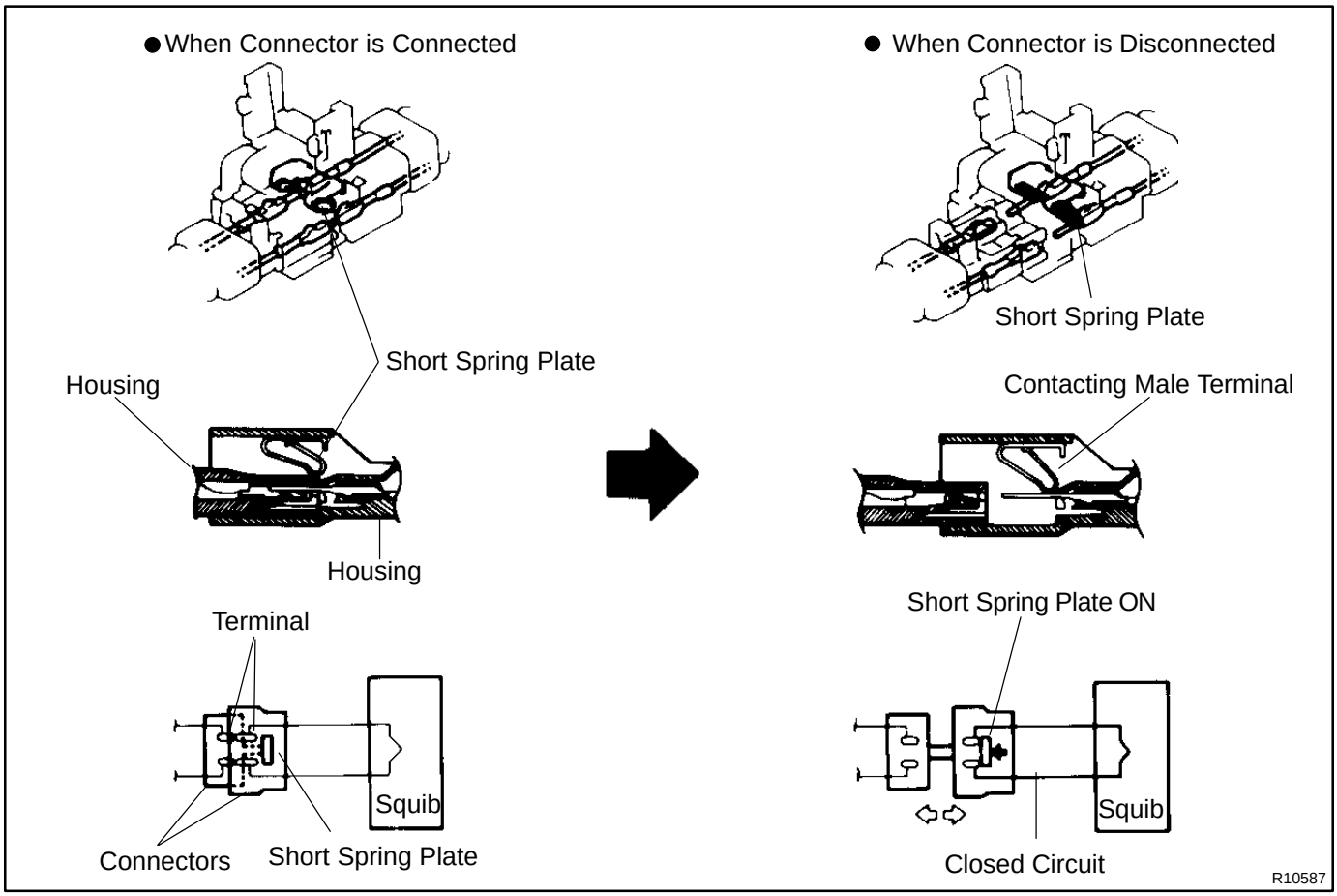

HINT:
The type of connector is shown in the diagram on the previous page.

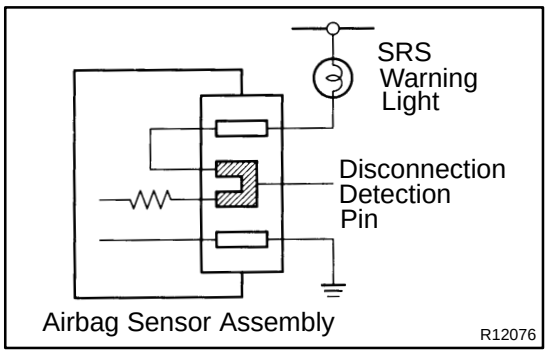

(3) Electrical connection check mechanism
This mechanism electrically checks that connectors are connected correctly and completely. The electrical connection check mechanism is designed so that the disconnection detection pin connects with the diagnosis terminals when the connector housing lock is locked.

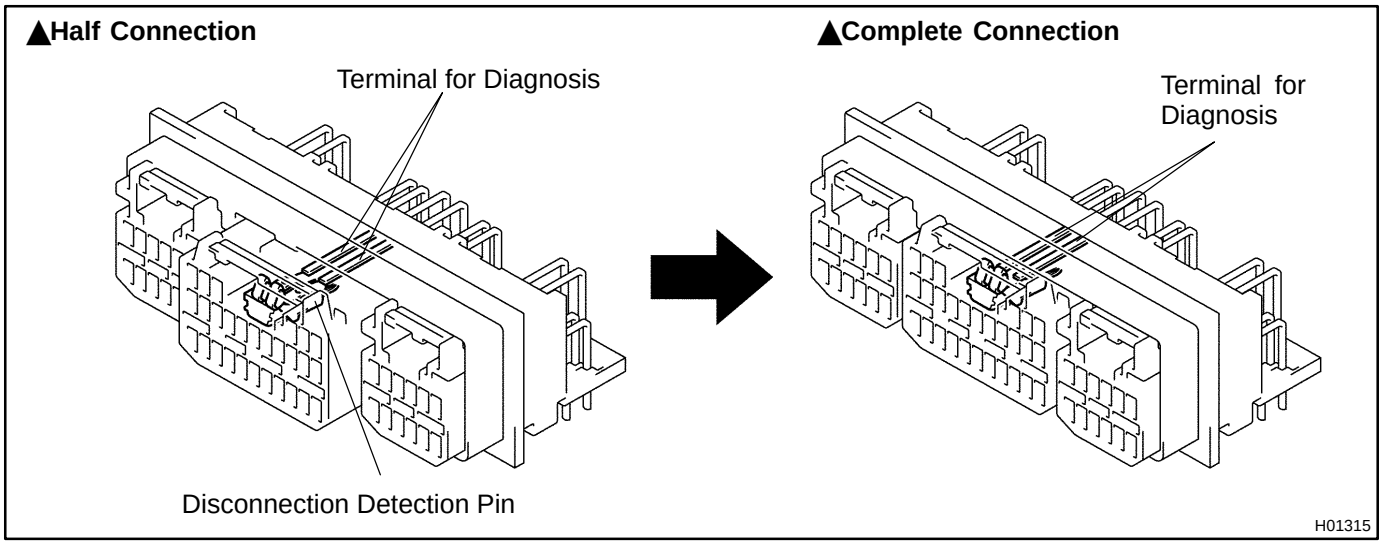

HINT:
The connectors shown in this illustration are connectors, ”1”, ”2” and ”3” in step 9.

(4) Connector twin–lock mechanism
With this mechanism connectors (male and female connectors) are locked by 2 locking devices to increase the connection reliability. If the primary lock is incomplete, ribs interfere and prevent the secondary lock.

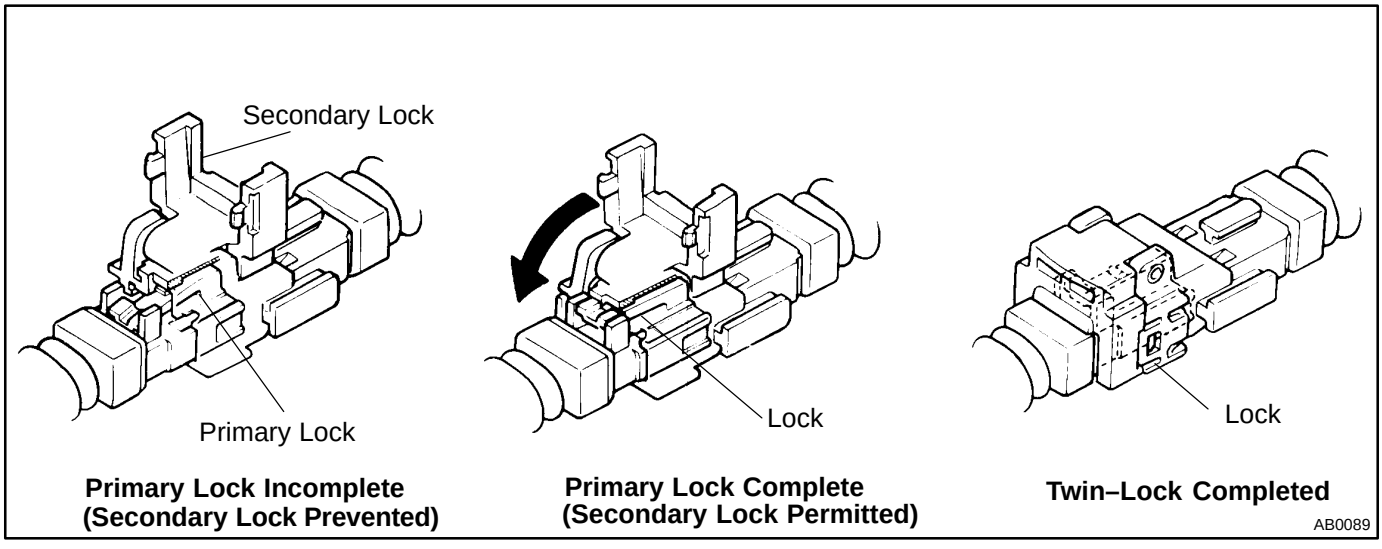

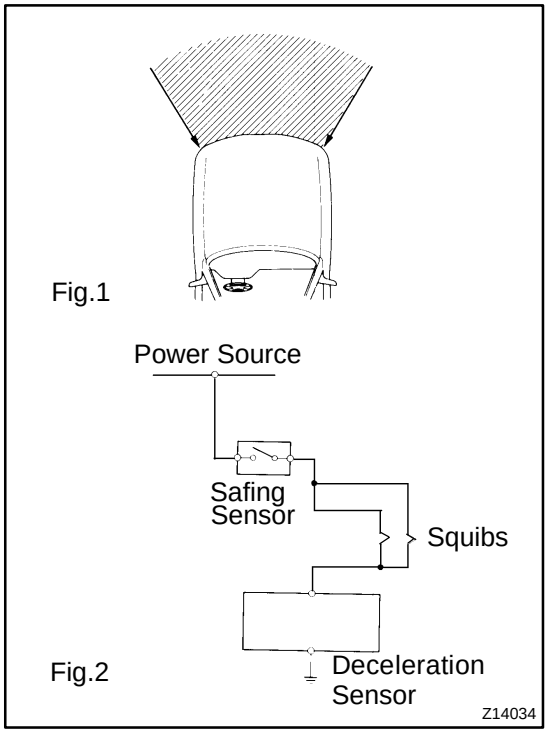

(b) When the vehicle is involved in a frontal collision in the hatched area (Fig. 1) and the shock is larger than the predetermined level, the SRS is activated automatically. A safing sensor is designed to go on at a smaller deceleration rate than the airbag sensor. As illustrated in Fig. 2, ignition is caused when current flows to the squib, which happens when a safing sensor and the deceleration sensor go on simultaneously. When a deceleration force acts on the sensors, 2 squibs in the driver airbag and front passenger airbag ignite and generate gas. The gas discharging into the driver airbag and front passenger airbag rapidly increases the pressure inside the bags, breaking open the steering wheel pad and instrument panel door. Bag inflation then ends, and the bags deflate as the gas is discharged through discharge holes at the bag's rear or side.

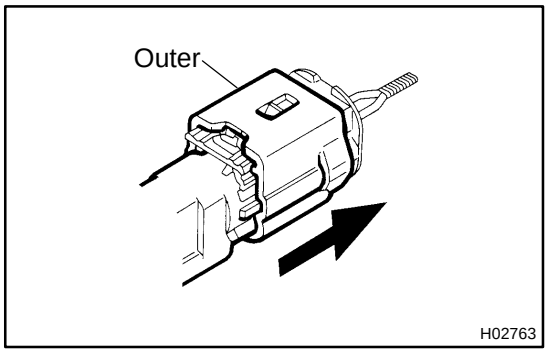

10. DISCONNECTION OF FRONT AIRBAG SENSOR CONNECTOR

(a) While holding both flank sides of the outer, slide the outer to the direction directed by an arrow.

(b) Lock of the connectors is released, then disconnect the connectors.

HINT:

Be sure to hold both flank sides of the outer. If holding the top or bottom sides, it will obstruct disconnection.

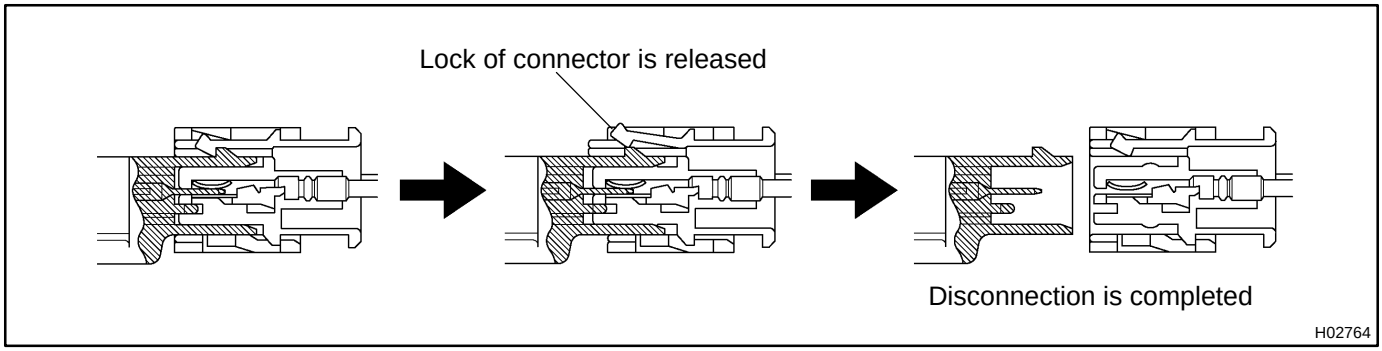

11. CONNECTION OF FRONT AIRBAG SENSOR CONNECTOR

(a) Align the male connector (on the side of sensor) and female connector in the same direction as shown in the illustration and fit in them without rubbing.

(b) As they are fitted in, the outer slides rearward. Press it until the outer returns to its original position again.

If fitting stops half way, connectors will separate.

(c) Be sure to insert until they are locked. After fitting in, pull them slightly to check that they are locked (When locked, make sure that the outer returns to its original position and sound at the time of fitting in can be heard.).

HINT:

- Do not fit in while holding the outer.
- When fitting in, the outer slides. Do not touch it.

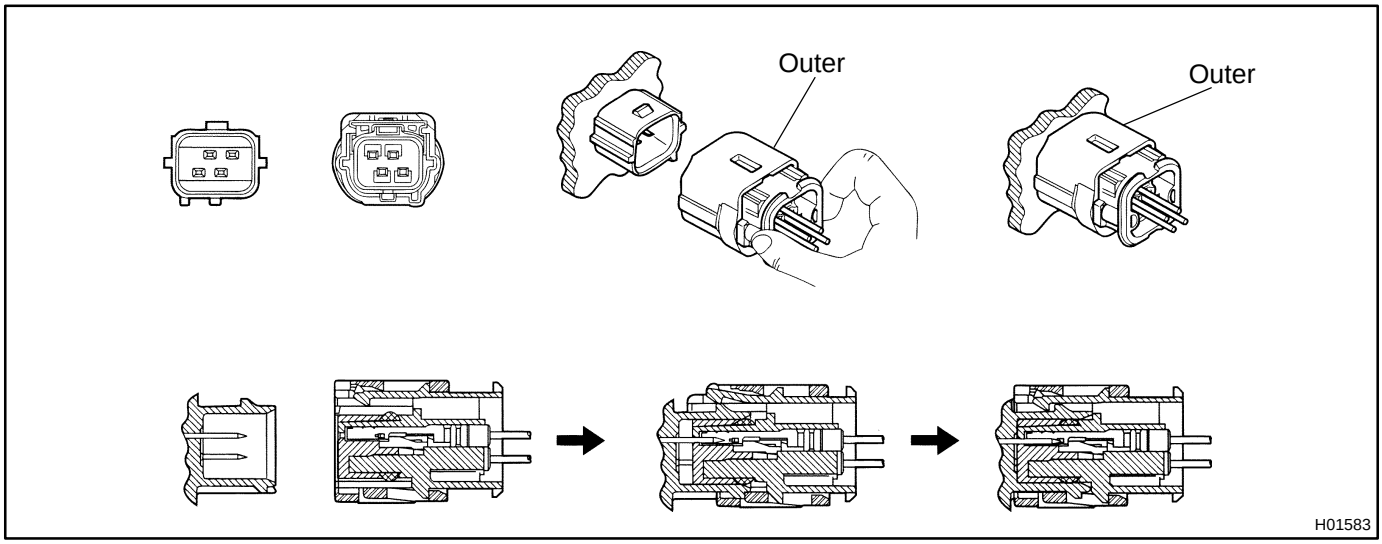

STEERING WHEEL PAD AND SPIRAL CABLE

RS00Y–43

COMPONENTS

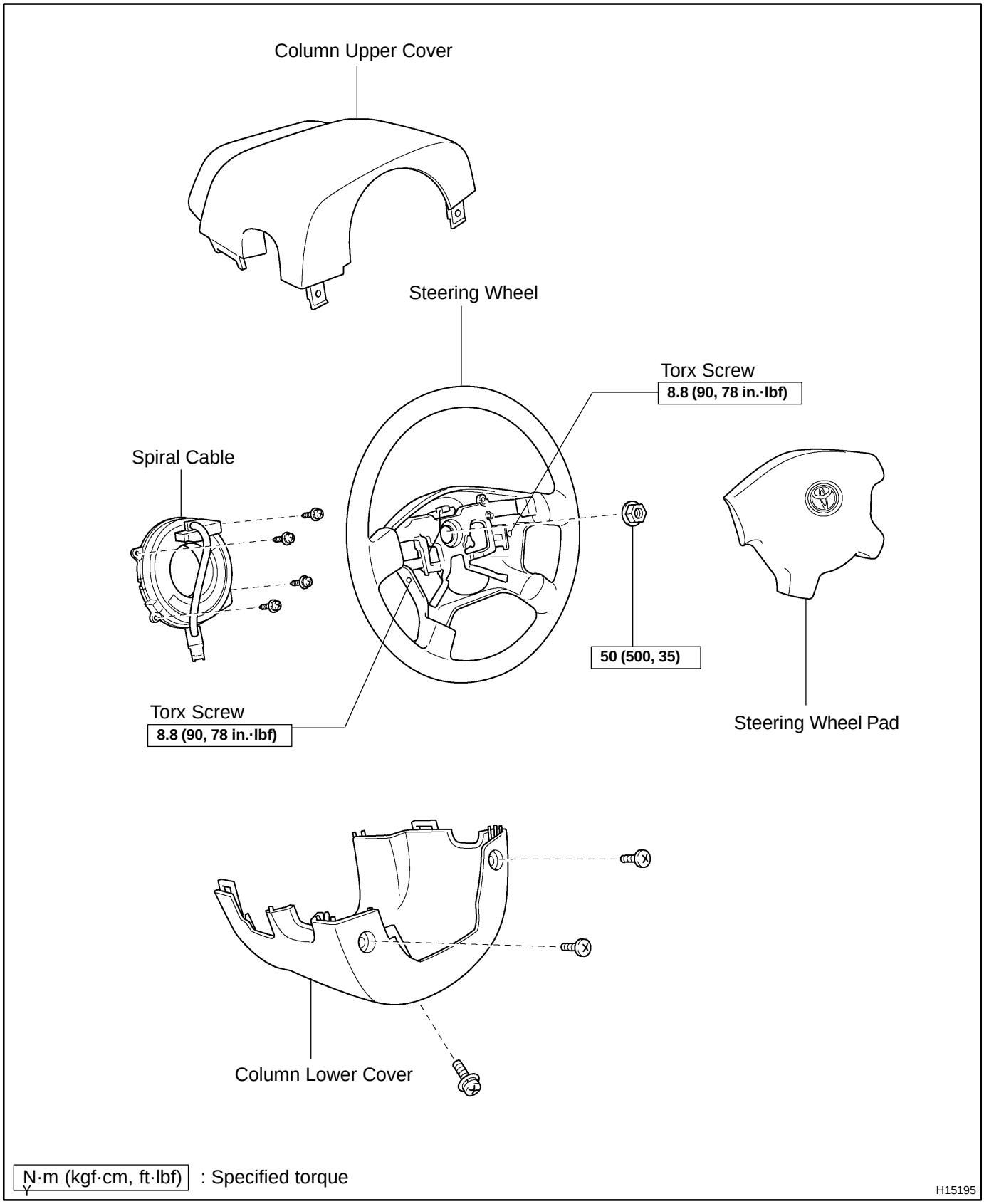

RS00Z–20

REMOVAL

HINT:

For step 1 to 4, refer to page SR–18.

1. **REMOVE STEERING WHEEL PAD**
2. **REMOVE STEERING WHEEL**
3. **REMOVE UPPER AND LOWER COLUMN COVERS**
4. **REMOVE SPIRAL CABLE**

RS010–40

INSPECTION

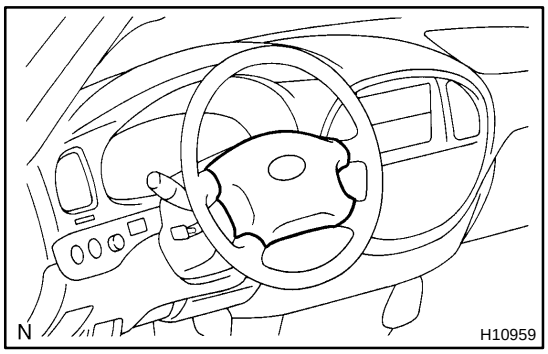

1. VEHICLE NOT INVOLVED IN COLLISION

(a) Do a diagnostic system check (See page DI–490).

(b) Do a visual check which includes the following item with the steering wheel pad (with airbag) installed in the vehicle.

Check cuts, minute cracks or marked discoloration on the steering wheel pad top surface and in the grooved portion.

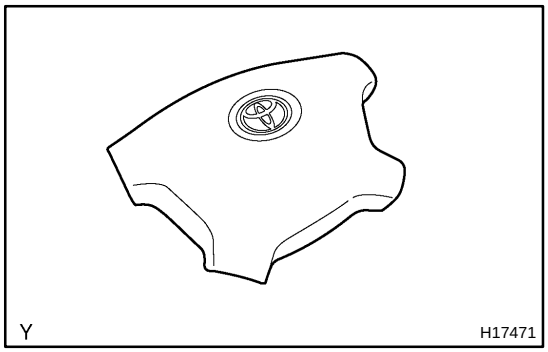

2. VEHICLE INVOLVED IN COLLISION AND AIRBAG IS NOT DEPLOYED

(a) Do a diagnostic system check (See page DI–490).

(b) Do a visual check which includes the following items with the steering wheel pad (with airbag) removed from the vehicle.

▲ Check cuts, minute cracks or marked discoloration on the steering wheel pad top surface and in the grooved portion.

▲ Check cuts and cracks in wire harnesses, and chipping in connectors.

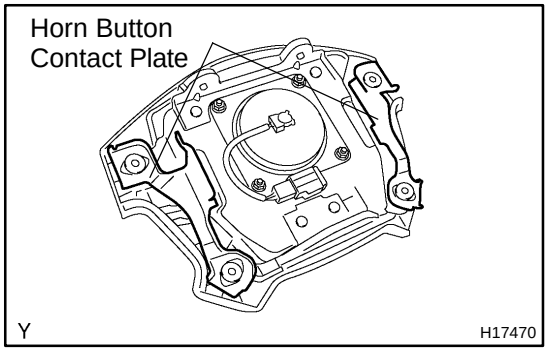

▲ Check the deformation of the horn button contact plate on the steering wheel pad.

HINT:

▲ If the horn button contact plate of the steering wheel pad is deformed, never repair it. Always replace the steering wheel pad with a new one.

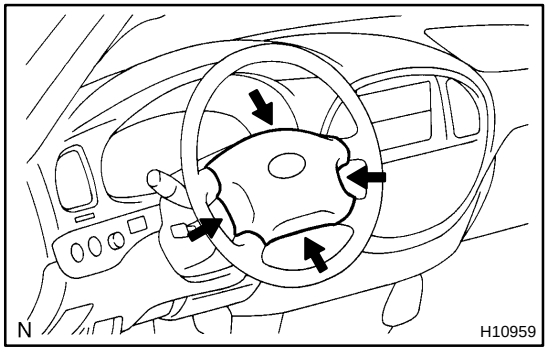

▲ There should be no interference between the steering wheel pad and steering wheel, and the clearance should be uniform all the way around when the new steering wheel pad is installed on the steering wheel.

CAUTION:

For removal and installation of the steering wheel pad, see page SR–18 and SR–28, and be sure to follow the correct procedure.

3. VEHICLE INVOLVED IN COLLISION AND AIRBAG IS DEPLOYED

(a) Do a diagnostic system check (See page DI–490).

(b) Do a visual check which includes the following items with the steering wheel pad (with airbag) removed from the vehicle.

- ▲ Check the deformation on the horn button contact plate of the steering wheel.
- ▲ Check the damage on the spiral cable connector and wire harness.

HINT:

- ▲ If the horn button contact plate of the steering wheel is deformed, never repair it. Always replace the steering wheel assembly with a new one.
- ▲ There should be no interference between the steering wheel pad and steering wheel, and the clearance should be uniform all the way around when the new steering wheel pad is installed on the steering wheel.

RS0H0–06

DISPOSAL

HINT:

When scrapping vehicle equipped with an SRS or disposing of a steering wheel pad (with airbag), always first deploy the airbag in accordance with the procedure described below. If any abnormality occurs with the airbag deployment, contact the SERVICE DEPT. of the TOYOTA MOTOR SALES, U.S.A., INC.

CAUTION:

- **Never dispose of a steering wheel pad which has an undeployed airbag.**
- **The airbag produces a sizeable exploding sound when it deploys, so perform the operation out–of–doors and where it will not create a nuisance to nearby residents.**

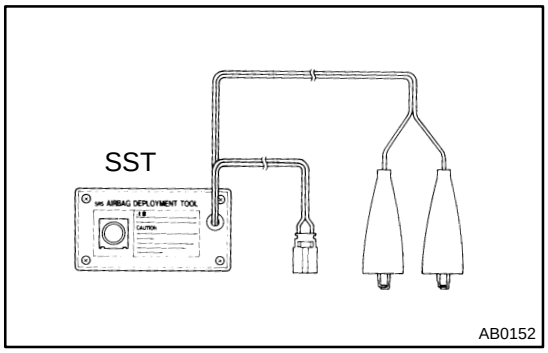

- **When deploying the airbag, always use the specified SST (SRS Airbag Deployment Tool). Perform the operation in a place away from electrical noise.**
  SST 09082–00700
- **When deploying an airbag, perform the operation at least 10 m (33 ft) away from the steering wheel pad.**
- **The steering wheel pad is very hot when the airbag is deployed, so leave it alone for at least 30 minutes after deployment.**
- **Use gloves and safety glasses when handling a steering wheel pad with the deployed airbag.**
- **Always wash your hands with water after completing the operation.**
- **Do not apply water, etc. to a steering wheel pad with the deployed airbag.**

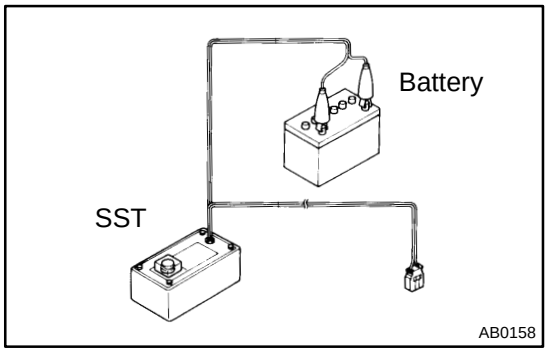

1. AIRBAG DEPLOYMENT WHEN SCRAPPING VEHICLE

HINT:

Have a battery ready as the power source to deploy the airbag.

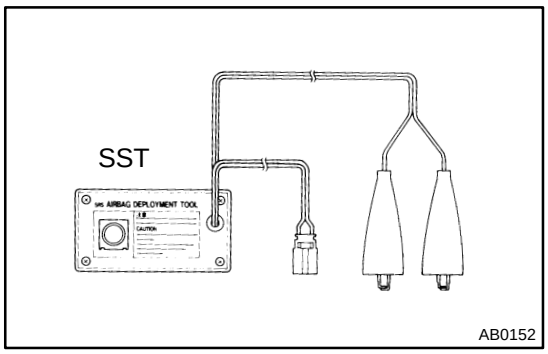

(a) Check functioning of the SST.

CAUTION:

When deploying the airbag, always use the specified SST: SRS Airbag Deployment Tool.

SST 09082–00700

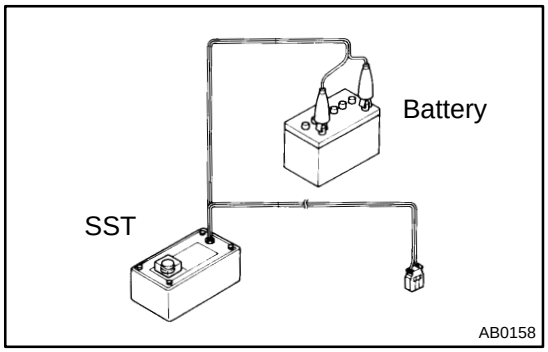

(1) Connect the SST to the battery.
Connect the red clip of the SST to the battery positive (+) terminal and the black clip to the battery negative (–) terminal.

HINT:

Do not connect the yellow connector which will be connected with the supplemental restraint system.

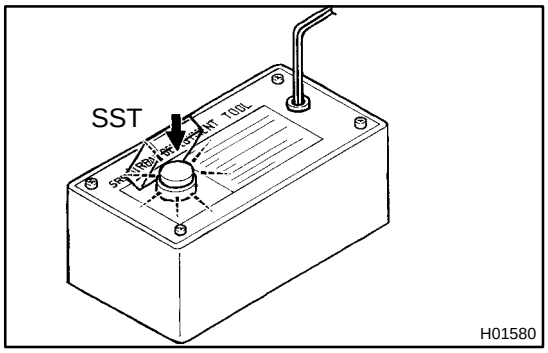

(2) Check functioning of the SST.
Press the SST activation switch, and check that the LED of the SST activation switch lights up.

CAUTION:

If the LED lights up when the activation switch is not being pressed, SST malfunction is probable, so definitely do not use the SST.

(3) Disconnect the SST from the battery.

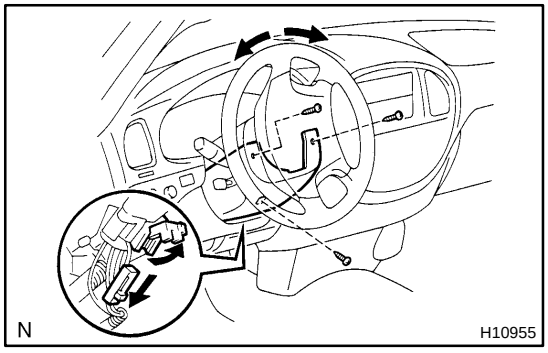

(b) Install the SST.

CAUTION:

Check that there is no looseness in the steering wheel and steering wheel pad.

(1) While turning the steering wheel right / left, remove the 3 screws and column lower cover.

(2) Disconnect the airbag connector of the spiral cable.

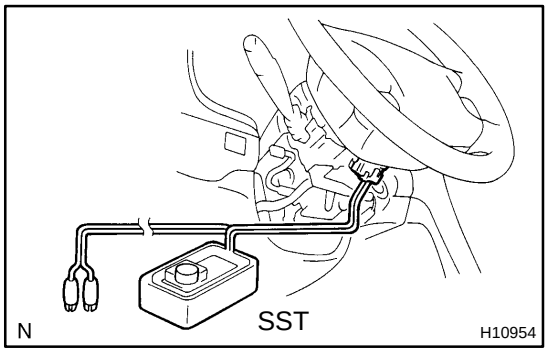

(3) Connect the SST connector to the airbag connector of the spiral cable.

SST 09082–00700

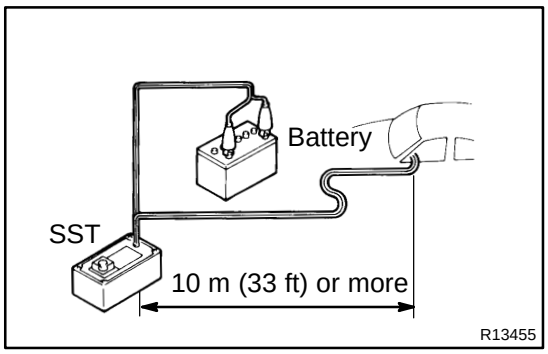

(4) Move the SST at least 10 m (33 ft) away from the front of the vehicle.
(5) Close all the doors and windows of the vehicle.

NOTICE:

Take care not to damage the SST wire harness.

(6) Connect the SST red clip to the battery positive (+) terminal and the black clip to the negative (–) terminal.

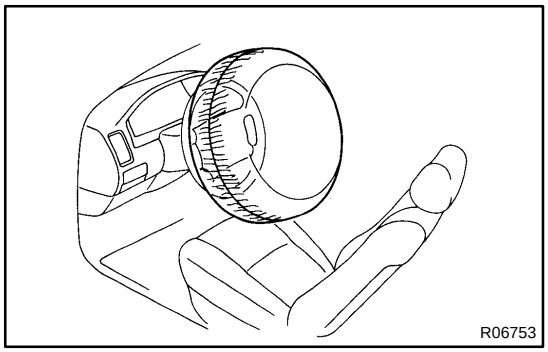

(c) Deploy the airbag.
(1) Confirm that no one is inside the vehicle or within 10 m (33 ft) area around the vehicle.
(2) Press the SST activation switch and deploy the airbag.

HINT:

The airbag deploys simultaneously as the LED of the SST activation switch lights up.

(d) Dispose the steering wheel pad (with airbag).

CAUTION:

- **The steering wheel pad is very hot when the airbag is deployed, so leave it alone for at least 30 minutes after deployment.**
- **When moving a vehicle for scrapping which has a steering wheel pad with deployed airbag, use gloves and safety glasses.**
- **Use gloves and safety glasses when handling a steering wheel pad with the deployed airbag.**
- **Always wash your hands with water after completing the operation.**
- **Do not apply water, etc. to a steering wheel pad with the deployed airbag.**

HINT:

When scrapping a vehicle, deploy the airbag and scrap the vehicle with the steering wheel pad still installed.

2. DEPLOYMENT WHEN DISPOSING OF STEERING WHEEL PAD ONLY

NOTICE:

- **When disposing of the steering wheel pad (with airbag) only, never use the customers vehicle to deploy the airbag.**
- **Be sure to follow the procedure given below when deploying the airbag.**

HINT:

Have a battery ready as the power source to deploy the airbag.

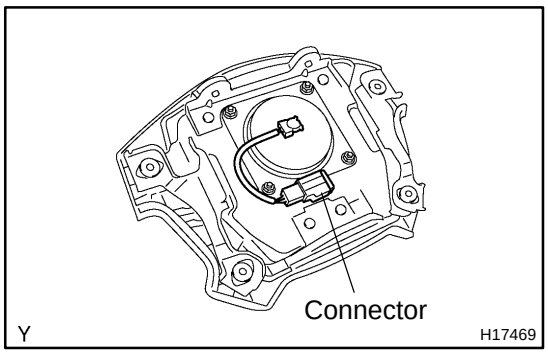

(a) Remove the steering wheel pad (See page SR–18).

CAUTION:

When storing the steering wheel pad, keep the upper surface of the pad facing upward.

(b) Remove the steering wheel pad connector.

Remove the connector on the rear surface of the steering wheel pad from the bracket.

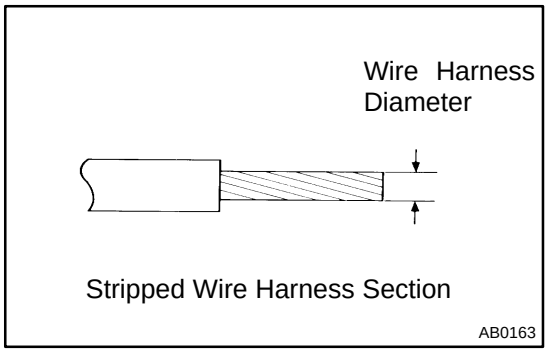

(c) Using a service–purpose wire harness, tie down the steering wheel pad to the disc wheel.

Wire harness: Stripped wire harness section 1.25 mm^2 or more (0.0019 in^2. or more).

CAUTION:

If a wire harness which is too thin or some other thing is used to tie down the steering wheel pad, it may be snapped by the shock when the airbag is deployed. This is highly dangerous. Always use a wire harness for vehicle use which is at least 1.25 mm^2 (0.0019 in^2).

HINT:

To calculate the square of the stripped wire harness section:

Square = 3.14 x (Diameter)^2 divided by 4

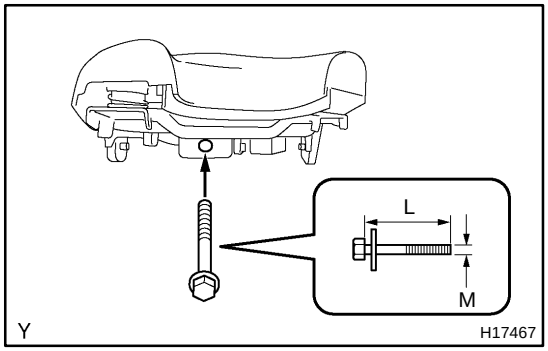

(1) Install the 2 bolts with washers in the 2 bolt holes in the steering wheel pad.

Bolt:

L: 35.0 mm (1.387 in.)

M: 6.0 mm (0.236 in.)

Pitch: 1.0 mm (0.039 in.)

NOTICE:

- **Tighten the bolts by hand until the bolts become difficult to turn.**
- **Do not tighten the bolts too much.**

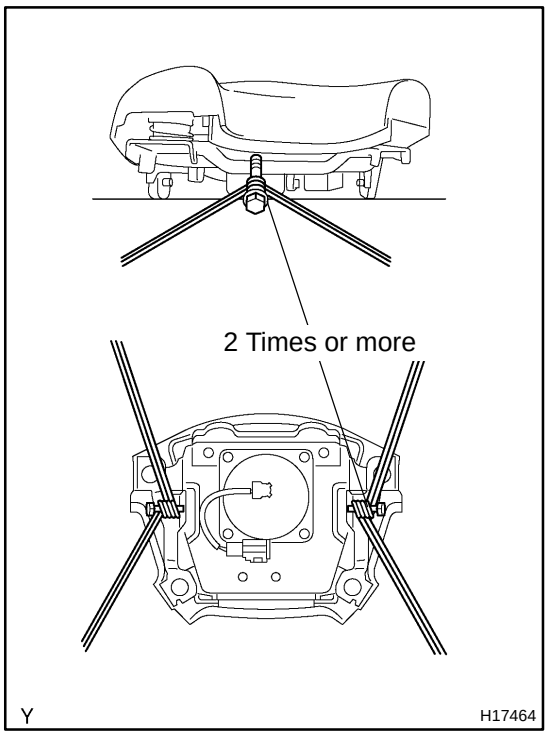

(2) Using 3 wire harness, wind the wire harness at least 2 times each around the bolts installed on the left and right sides of the steering wheel pad.

CAUTION:

- **Tightly wind the wire harness around the bolts so that there is no slack.**
- **If there is slack in the wire harness, the steering wheel pad may come loose due to the shock when the airbag is deployed. This is highly dangerous.**

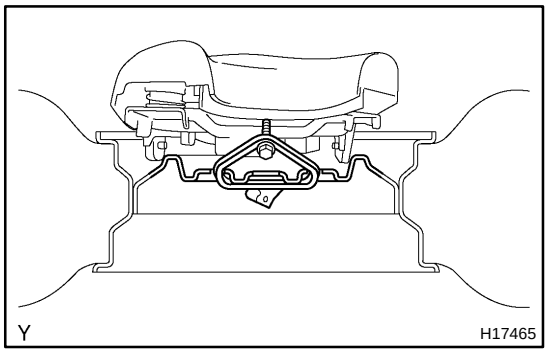

(3) Face the upper surface of the steering wheel pad upward. Separately tie the left and right sides of the steering wheel pad to the disc wheel through the hub nut holes. Position the steering wheel pad connector so that it hangs downward through a hub hole in the disc wheel.

CAUTION:

- **Make sure that the wire harness is tight. It is very dangerous when looseness in the wire harness results in the steering wheel pad coming free through the shock from the airbag deploying.**
- **Always tie down the steering wheel pad with the pad side facing upward. It is very dangerous if the steering wheel pad is tied down with the metal surface facing upward as the wire harness will be cut by the shock from the airbag deploying and the steering wheel pad will be thrown into the air.**

NOTICE:

The disc wheel will be marked by airbag deployment, so when disposing of the airbag use a redundant disc wheel.

(d) Check functioning of the SST (See step 1–(a)).
SST 09082–00700

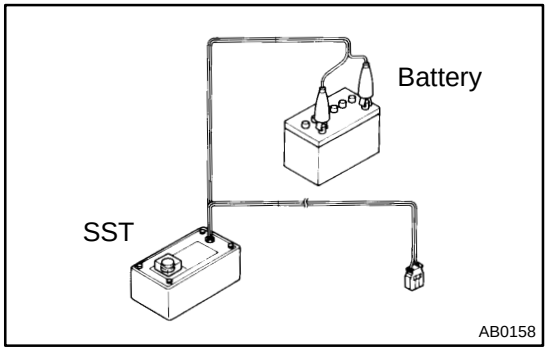

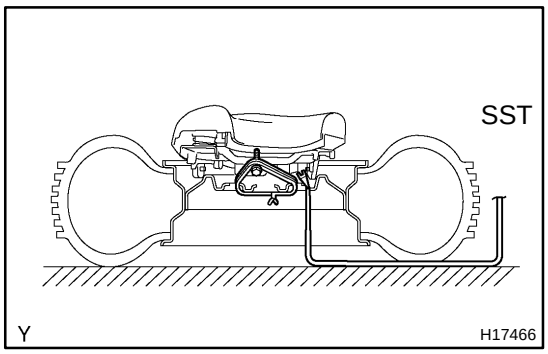

(e) Install the SST.

CAUTION:

Place the disc wheel on the level ground.

(1) Connect the connectors of SST to the steering wheel pad connector.

SST 09082–00700, 09082–00760

NOTICE:

To avoid damaging the SST connector and wire harness, do not lock the secondary lock of the twin lock. Also, secure some slack for the SST wire harness inside the disc wheel.

(2) Move the SST to at least 10 m (33 ft) away from the steering wheel pad tied down on the disc wheel.

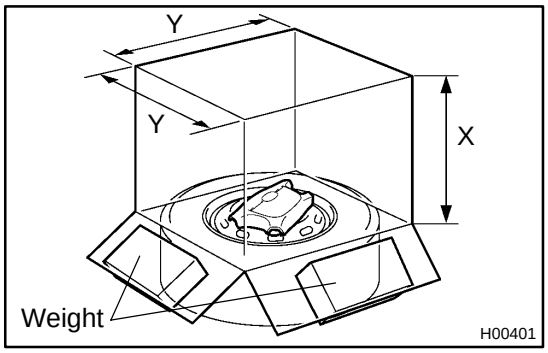

(f) Cover the steering wheel pad with a cardboard box or tires.

▲ Covering method using a cardboard box:
Cover the steering wheel pad with the cardboard box and weight the cardboard box down in 4 places with at least 190 N (20 kg, 44 lb).

Size of cardboard box:

Must exceed the following dimensions:

X = 460 mm (18.11 in.)

Y = 650 mm (25.59 in.)

NOTICE:

▲ **When dimension Y of the cardboard box exceeds the diameter of the disc wheel with tire to which the steering wheel pad is tied, X should be the following size.**
X = 460 mm (18.11 in.) + width of tire

▲ **If a cardboard box smaller than the specified size is used, the cardboard box will be broken by the shock from the airbag deployment.**

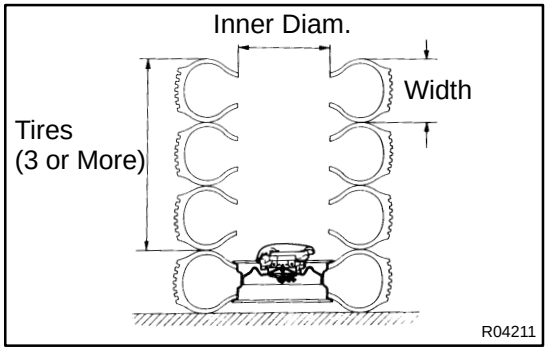

▲ Covering method using tires:
Place at least 3 tires without disc wheel on top of the disc wheel with tire to which the steering wheel pad is tied.

Tire size: Must exceed the following dimensions–
Width: 185 mm (7.87 in.)
Inner diameter: 360 mm (14.17 in.)

CAUTION:
Do not use tires with disc wheels.
NOTICE:
The tires may be marked by the airbag deployment, so use the redundant tires.

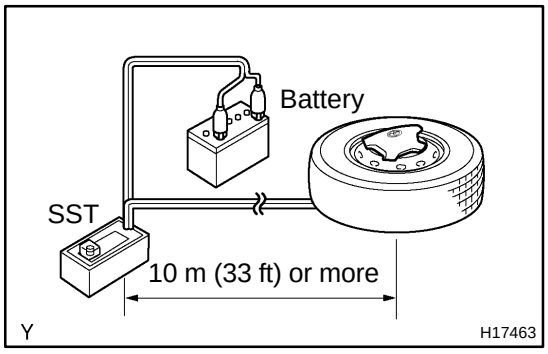

(g) Deploy the airbag.
(1) Connect the SST red clip to the battery positive (+) terminal and the black clip to the battery negative (–) terminal.
(2) Check that no one is within 10 m (33 ft) area around the disc wheel which the steering wheel pad is tied to.
(3) Press the SST activation switch and deploy the airbag.

HINT:
The airbag deploys simultaneously as the LED of the SST activation switch lights up.

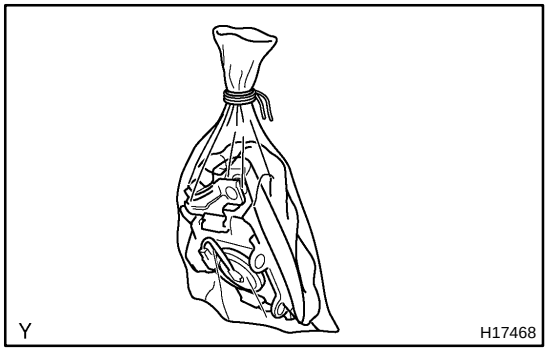

(h) Dispose of the steering wheel pad (with airbag).

CAUTION:
- **The steering wheel pad is very hot when the airbag is deployed, so leave it alone for at least 30 minutes after deployment.**
- **Use gloves and safety glasses when handling a steering wheel pad with deployed airbag.**
- **Always wash your hands with water after completing the operation.**
- **Do not apply water, etc. to a steering wheel pad with deployed airbag.**

(1) Remove the steering wheel pad from the disc wheel.
(2) Place the steering wheel pad in a vinyl bag, tie the end tightly and dispose of it in the same way as other general parts disposal.

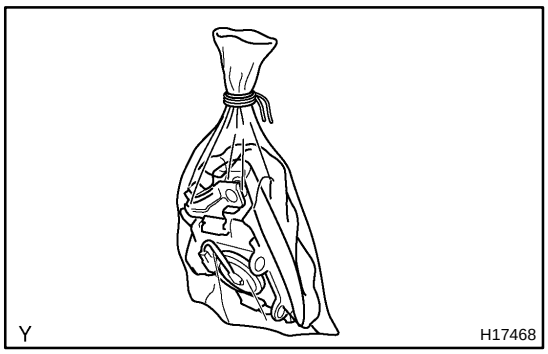

3. DEPLOYMENT WHEN DISPOSING OF STEERING WHEEL PAD WITH AN AIRBAG DEPLOYED IN A COLLISION

Dispose the steering wheel pad (with airbag).

CAUTION:

- **The steering wheel pad is very hot when the airbag is deployed, so leave it alone for at least 30 minutes after deployment.**
- **When moving a vehicle for scrapping which has a steering wheel pad with the deployed airbag, use gloves and safety glasses.**
- **Use gloves and safety glasses when handling a steering wheel pad with the deployed airbag.**
- **Always wash your hands with water after completing the operation.**
- **Do not apply water, etc. to a steering wheel pad with the deployed airbag.**

(1) Remove the steering wheel pad from the steering wheel.

(2) Place the steering wheel pad in a vinyl bag, tie the end tightly and dispose of it in the same way as other general parts disposal.

RS012–25

REPLACEMENT

REPLACEMENT REQUIREMENTS

In the following cases, replace the steering wheel pad, steering wheel or spiral cable.

Case	Replacing part
If the airbag has been deployed.	Steering wheel pad
If the steering wheel pad has been found to be faulty in troubleshooting.	Steering wheel pad
If the spiral cable has been found to be faulty in troubleshooting.	Spiral cable
If the steering wheel pad has been found to be faulty during checking items (See page RS–12).	Steering wheel pad
If the steering wheel has been found to be faulty during checking items (See page RS–12).	Steering wheel
If the spiral cable has been found to be faulty during checking items (See page RS–12).	Spiral cable
If the steering wheel pad has been dropped.	Steering wheel pad

CAUTION:

For removal and installation of the steering wheel pad, see page SR–18 and SR–28. Be sure to follow the correct procedure.

RS013–21

INSTALLATION

HINT:

For step 1 to 4, refer to page SR–28.

1. **INSTALL SPIRAL CABLE**
2. **INSTALL UPPER AND LOWER COLUMN COVERS**
3. **INSTALL STEERING WHEEL**
4. **INSTALL STEERING WHEEL PAD**

FRONT PASSENGER AIRBAG ASSEMBLY

RS014–28

COMPONENTS

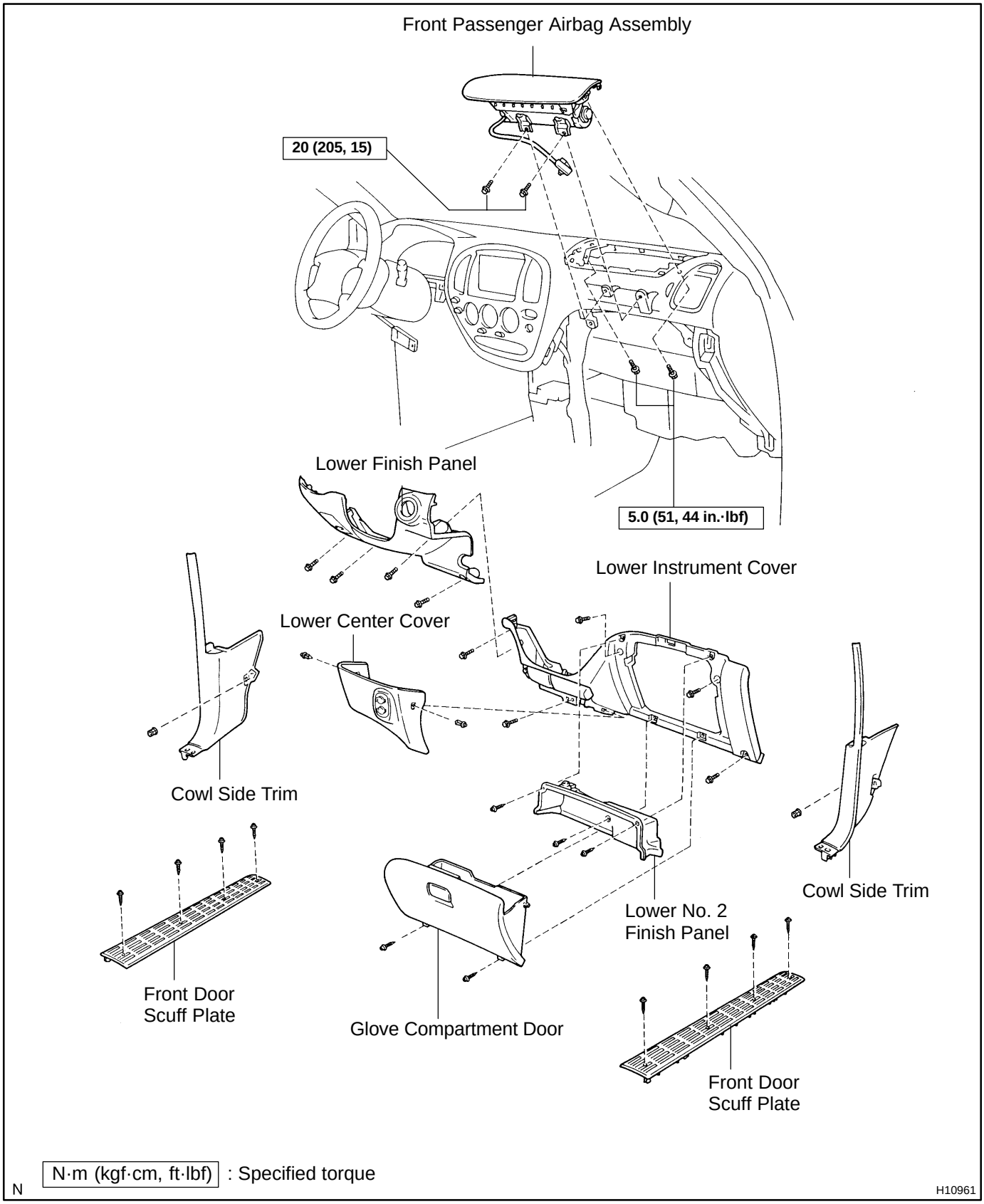

RS0HZ–01

REMOVAL

NOTICE:

- **If the wiring connector of the SRS is disconnected and the ignition switch is in ON or ACC position, DTCs will be recorded.**
- **Never use the airbag parts from another vehicle. When replacing parts, replace them with new parts.**

HINT:

For step 2 to 8, refer to page BO–72.

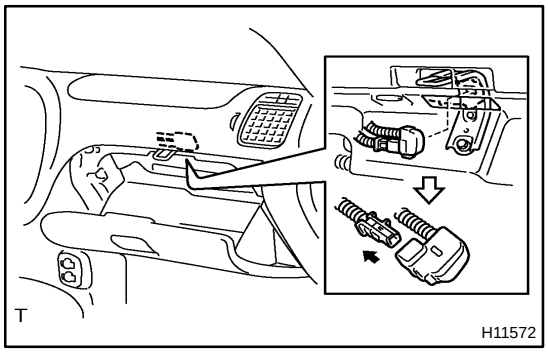

1. DISCONNECT AIRBAG CONNECTOR

NOTICE:

When handling the airbag connector, take care not to damage the airbag wire harness.

(a) Using a clip remover, disengage the connector clamp.

(b) Disconnect the connector.

2. REMOVE FRONT DOOR SCUFF PLATES

3. REMOVE COWL SIDE TRIMS

4. REMOVE GLOVE COMPARTMENT DOOR

5. REMOVE LOWER NO. 2 FINISH PANEL

6. REMOVE LOWER CENTER COVER

7. REMOVE LOWER FINISH PANEL

8. REMOVE LOWER INSTRUMENT COVER

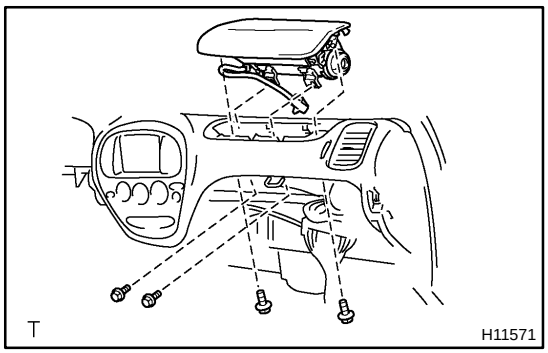

9. REMOVE FRONT PASSENGER AIRBAG ASSEMBLY

(a) Remove the 2 bolts holding the front passenger airbag assembly and instrument panel.

(b) Remove the 2 bolts holding the front passenger airbag assembly and instrument panel reinforcement.

(c) Remove the front passenger airbag assembly.

CAUTION:

- **Do not store the front passenger airbag assembly with the airbag deployment side facing downward.**
- **Never disassemble the front passenger airbag assembly.**

RS02Q–09

INSPECTION

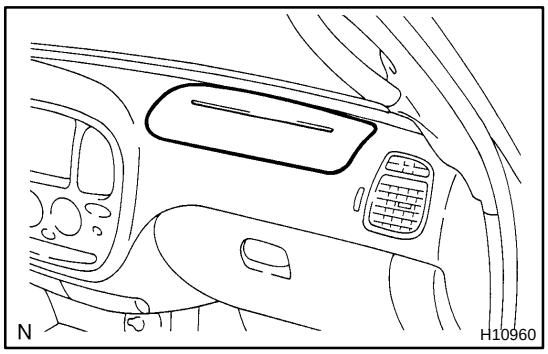

1. VEHICLE NOT INVOLVED IN COLLISION

(a) Do a diagnostic system check (See page DI–490).

(b) Do a visual check which includes the following item with the front passenger airbag assembly installed in the vehicle.

Check cuts, minute cracks or marked discoloration on the front passenger airbag assembly and instrument panel.

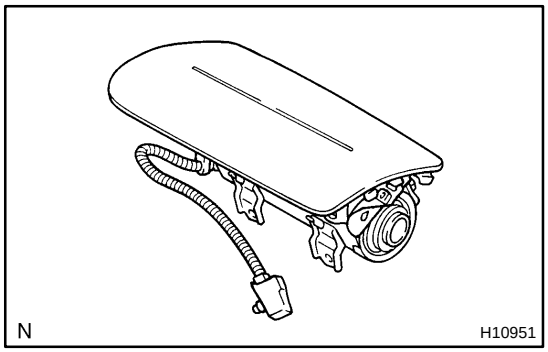

2. VEHICLE INVOLVED IN COLLISION AND AIRBAG IS NOT DEPLOYED

(a) Do a diagnostic system check (See page DI–490).

(b) Do a visual check which includes the following items with the front passenger airbag assembly removed from the vehicle.

- ▲ Check cuts, minute cracks or marked discoloration on the front passenger airbag assembly.
- ▲ Check cuts and cracks in wire harnesses, and for chipping in connectors.
- ▲ Check the deformation or cracks on the instrument panel and instrument panel reinforcement.

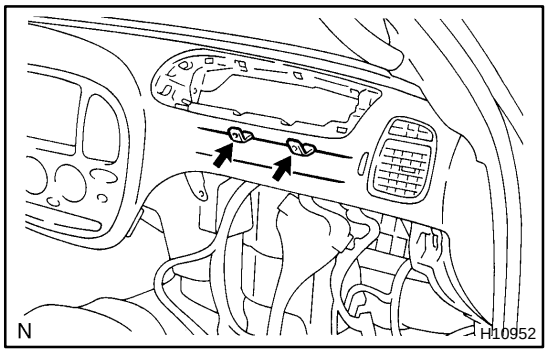

HINT:

- ▲ If the instrument panel or instrument panel reinforcement is deformed or cracked, never repair it. Always replace it with a new one.

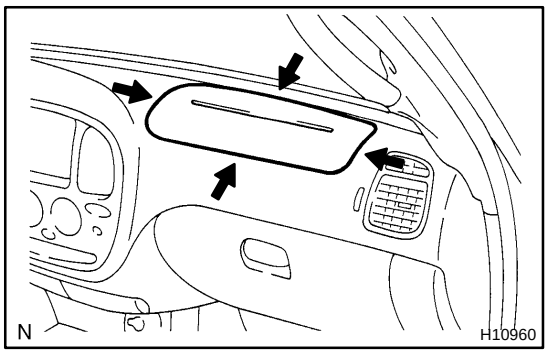

- ▲ There should be no interference between the instrument panel and the front passenger airbag assembly.

CAUTION:

For removal and installation of the front passenger airbag assembly, see page RS–25 and RS–34, and be sure to follow the correct procedure.

3. VEHICLE INVOLVED IN COLLISION AND AIRBAG IS DEPLOYED

(a) Do a diagnostic system check (See page DI–490).

(b) Do a visual check which includes the following items with the front passenger airbag assembly removed from the vehicle.

- ▲ Check the deformation or cracks on the instrument panel and instrument panel reinforcement.
- ▲ Check the damage on the connector and wire harness.

HINT:

If the instrument panel or instrument panel reinforcement is deformed or cracked, never repair it. Always replace it with a new one.

RS0I0–01

DISPOSAL

HINT:

When scrapping vehicle equipped with an SRS or disposing of a front passenger airbag assembly, always first deploy the airbag in accordance with the procedure described below. If any abnormality occurs with the airbag deployment, contact the SERVICE DEPT. of the TOYOTA MOTOR SALES, U.S.A., INC.

CAUTION:

- **Never dispose of a front passenger airbag assembly which has an undeployed airbag.**
- **The airbag produces a sizeable exploding sound when it deploys, so perform the operation out–of–doors and where it will not create a nuisance to nearby residents.**

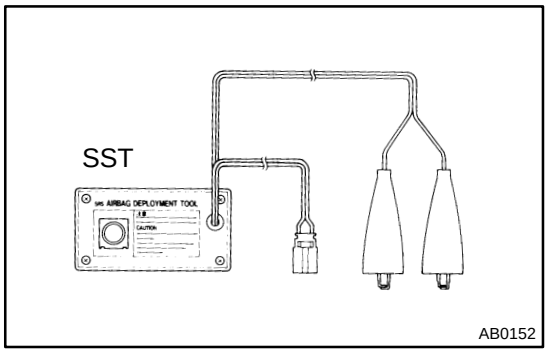

- **When deploying the airbag, always use the specified SST (SRS Airbag Deployment Tool). Perform the operation in a place away from electrical noise.**
  SST 09082–00700
- **When deploying an airbag, perform the operation at least 10 m (33 ft) away from the front passenger airbag assembly.**
- **The front passenger airbag assembly is very hot when the airbag is deployed, so leave it alone for at least 30 minutes after deployment.**
- **Use gloves and safety glasses when handling a front passenger airbag assembly with the deployed airbag.**
- **Always wash your hands with water after completing the operation.**
- **Do not apply water, etc. to a front passenger airbag assembly with the deployed airbag.**

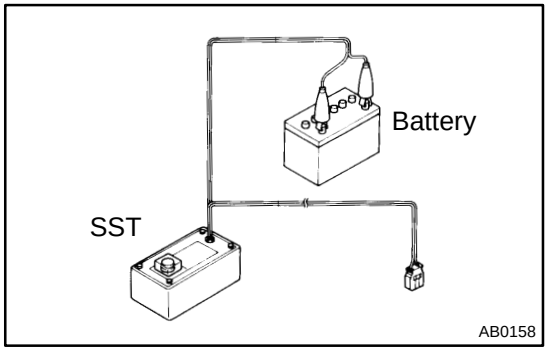

1. AIRBAG DEPLOYMENT WHEN SCRAPPING VEHICLE

HINT:

Have a battery ready as the power source to deploy the airbag.

(a) Check functioning of the SST
(See step 1–(a) on page RS–14).
SST 09082–00700

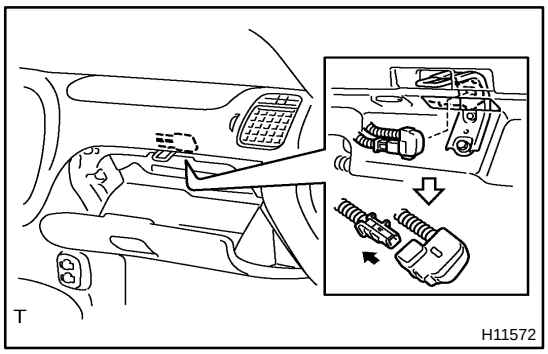

(b) Disconnect the airbag connector.

NOTICE:

When handling the airbag connector, take care not to damage the airbag wire harness.

(1) Using a clip remover, disengage the connector clamp.

(2) Disconnect the airbag connector as shown in the illustration.

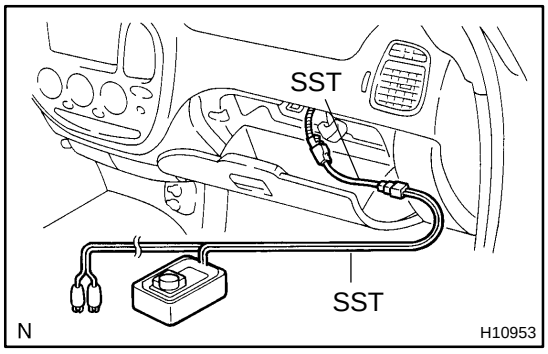

(c) Install the SST.

(1) Connect the connector of 2 SST to the front passenger airbag assembly connector.

SST 09082–00700, 09082–00760

NOTICE:

To avoid damaging the SST connector and wire harness, do not lock the secondary lock of the twin lock.

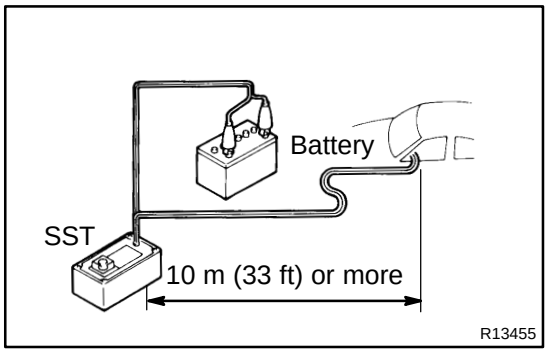

(2) Move the SST to at least 10 m (33 ft) away from the front of the vehicle.

(3) Close all the doors and windows of the vehicle.

NOTICE:

Take care not to damage the SST wire harness.

(4) Connect the SST red clip to the battery positive (+) terminal and the black clip to the negative (–) terminal.

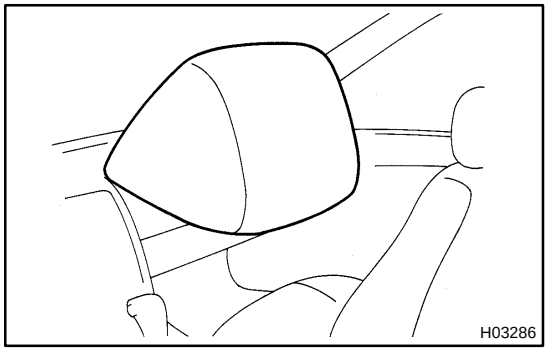

(d) Deploy the airbag.

(1) Check that no one is inside the vehicle or within 10 m (33 ft) area around the vehicle.

(2) Press the SST activation switch and deploy the airbag.

HINT:

The airbag deploys simultaneously as the LED of the SST activation switch lights up.

(e) Dispose of the front passenger airbag assembly.

CAUTION:

- **The front passenger airbag assembly is very hot when the airbag is deployed, so leave it alone for at least 30 minutes after deployment.**
- **Use gloves and safety glasses when handling a front passenger airbag assembly with the deployed airbag.**
- **Always wash your hands with water after completing the operation.**
- **Do not apply water, etc. to a front passenger airbag assembly with the deployed airbag.**

▲ **When moving a vehicle for scrapping which has a front passenger airbag assembly with the deployed airbag, use gloves and safety glasses.**

HINT:

When scrapping a vehicle, deploy the airbag and scrap the vehicle with the front passenger airbag assembly still installed.

2. DEPLOYMENT WHEN DISPOSING OF FRONT PASSENGER AIRBAG ASSEMBLY ONLY

NOTICE:

▲ **When disposing of the front passenger airbag assembly only, never use the customer's vehicle to deploy the airbag.**

▲ **Be sure to follow the procedure given below when deploying the airbag.**

HINT:

Have a battery ready as the power source to deploy the airbag.

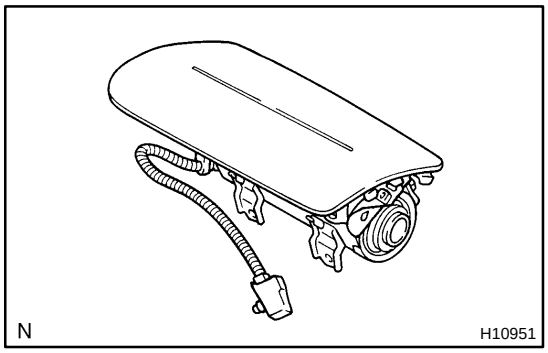

(a) Remove the front passenger airbag assembly (See page RS–25).

CAUTION:

▲ **When removing the front passenger airbag assembly, work must be started 90 seconds after the ignition switch is turned to the "LOCK" position and the negative (–) terminal cable is disconnected from the battery.**

▲ **Store the front passenger airbag assembly with the airbag deployment side facing upward.**

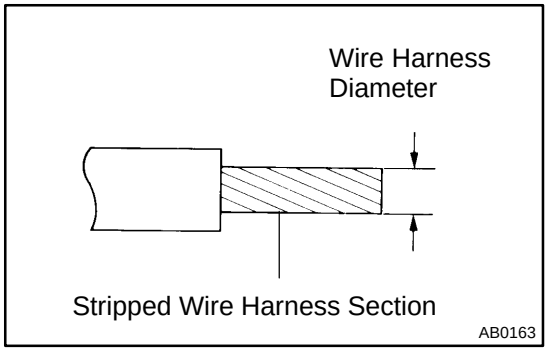

(b) Using a service–purpose wire harness for the vehicle, tie down the front passenger airbag assembly to the tire.

Wire harness: Stripped wire harness section 1.25 mm^2 or more (0.0019 $in.^2$ or more)

CAUTION:

If the front passenger airbag assembly is tied down with too thin wire harness, it may snap. This is highly dangerous. Always use wire harness which is at least 1.25 mm^2 (0.0019 $in.^2$).

HINT:

To calculate the square of the stripped wire harness section:

Square = 3.14 X $(Diameter)^2$ divided by 4

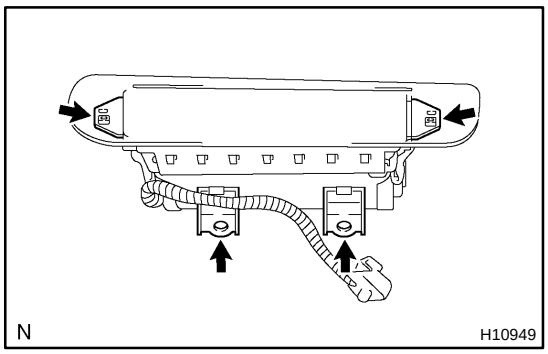

(1) Pass the wire harness through the installation holes indicated by arrows in the illustration.

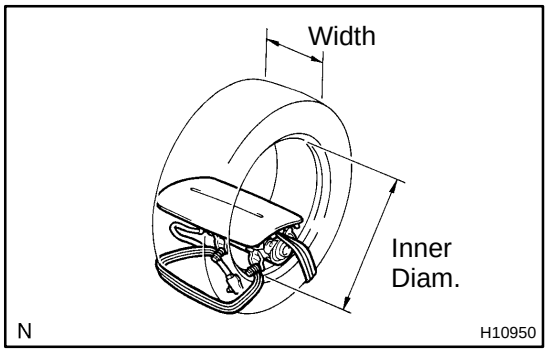

(2) Position the front passenger airbag assembly inside the tire with the airbag deployment side facing inside.

Tire size: Must exceed the following dimensions–
Width: 185 mm (7.28 in.)
Inner diameter: 360 mm (14.17 in.)

CAUTION:

- **Make sure that the wire harness is tight. It is very dangerous if looseness in the wire harness results in the front passenger airbag assembly coming free due to the shock from the airbag deploying.**
- **Always tie down the front passenger airbag assembly with the airbag deployment side facing inside.**

NOTICE:

The tire will be marked by the airbag deployment, so use a redundant tire.

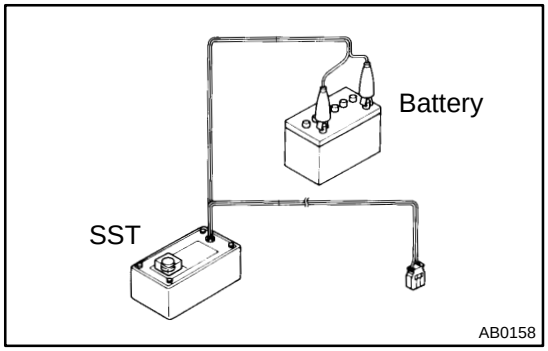

(c) Check functioning of the SST
(See step 1–(a) on page RS–11).
SST 09082–00700

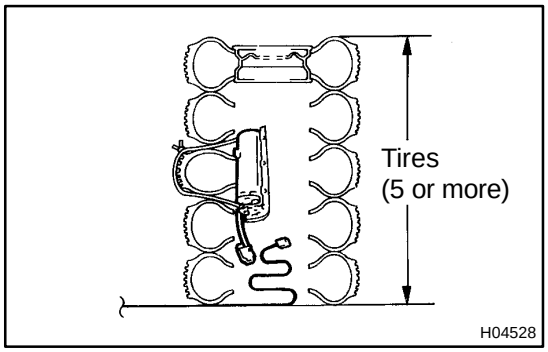

(d) Place the tires.
(1) Place at least 2 tires under the tire to which the front passenger airbag assembly is tied.
(2) Place at least 2 tires over the tire to which the front passenger airbag assembly is tied. The top tire should have the wheel installed.

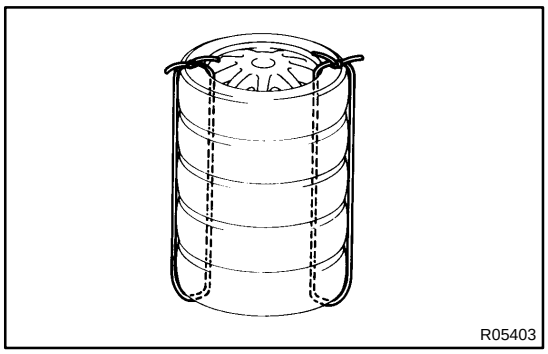
R05403

(3) Tie the tires together with 2 wire harness.

CAUTION:

Make sure that the wire harness is tight. It is very dangerous if loose wire harness results in the tires coming free due to the shock from the airbag deploying.

HINT:

Place the SST connector and wire harness inside tires. Secure at least 1 m (3 ft) of slack for the wire harness.

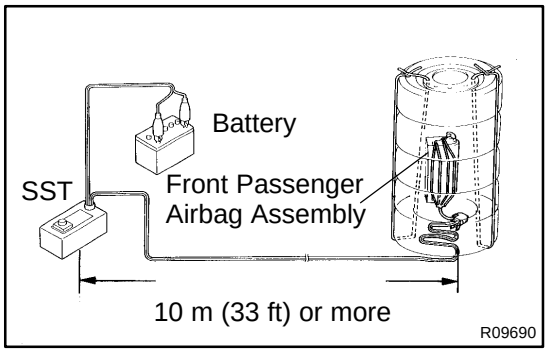

R09690

(e) Install the SST.

Connect the connector of 2 SST to the front passenger airbag assembly connector.

SST 09082–00700, 09082–00760

NOTICE:

To avoid damaging the SST connector and wire harness, do not lock the secondary lock of the twin lock.

(f) Deploy the airbag.

(1) Connect the SST red clip to the battery positive (+) terminal and the black clip to the battery negative (–) terminal.

(2) Check that no one is within 10 m (33 ft) area around the tire which the front passenger airbag assembly is tied to.

(3) Press the SST activation switch and deploy the airbag.

HINT:

The airbag deploys simultaneously as the LED of the SST activation switch lights up.

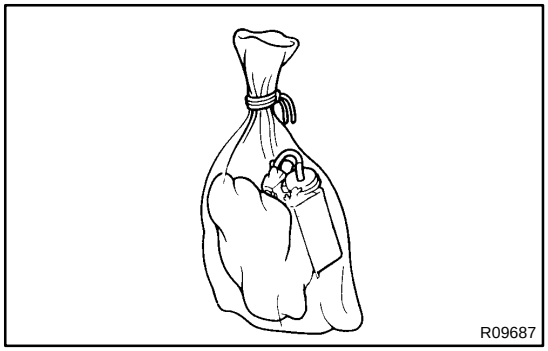
R09687

(g) Dispose of the front passenger airbag assembly.

CAUTION:

- **The front passenger airbag assembly is very hot when the airbag is deployed, so leave it alone for at least 30 minutes after deployment.**
- **Use gloves and safety glasses when handling a front passenger airbag assembly with deployed airbag.**
- **Always wash your hands with water after completing the operation.**
- **Do not apply water, etc. to a front passenger airbag assembly with the deployed airbag.**

(1) Remove the front passenger airbag assembly from the tire.

(2) Place the front passenger airbag assembly in a vinyl bag, tie the end tightly and dispose of it in the same way as other general parts.

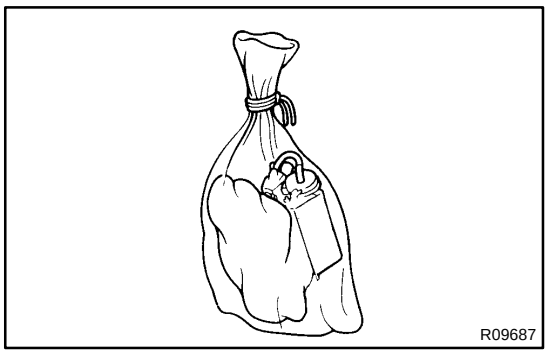

3. DEPLOYMENT WHEN DISPOSING OF STEERING WHEEL PAD WITH AN AIRBAG DEPLOYED IN A COLLISION

Dispose of the front passenger airbag assembly.

CAUTION:

- **The front passenger airbag assembly is very hot when the airbag is deployed, so leave it alone for at least 30 minutes after deployment.**
- **When moving a vehicle for scrapping which has a front passenger airbag assembly with the deployed airbag, use gloves and safety glasses.**
- **Use gloves and safety glasses when handling a front passenger airbag assembly with the deployed airbag.**
- **Always wash your hands with water after completing the operation.**
- **Do not apply water, etc. to a front passenger airbag assembly with the deployed airbag.**

(1) Remove the front passenger airbag assembly from the vehicle.

(2) Place the front passenger airbag assembly in a vinyl bag, tie the end tightly and dispose of it in the same way as other general parts.

RS018–21

REPLACEMENT

REPLACEMENT REQUIREMENTS

In the following cases, replace the front passenger airbag assembly, instrument panel or instrument panel reinforcement.

Case	Replacing part
If the airbag has been deployed.	Front passenger airbag assembly
If the front passenger airbag assembly has been found to be faulty in trouble-shooting.	Front passenger airbag assembly
If the front passenger airbag assembly has been found to be faulty during checking items (See page RS–26).	Front passenger airbag assembly
If the instrument panel has been found to be faulty during checking items (See page RS–26).	Instrument panel
If the instrument panel reinforcement has been found to be faulty during checking items (See page RS–26).	Instrument panel reinforcement
If the front passenger airbag assembly has been dropped.	Front passenger airbag assembly

CAUTION:

For replacement of the front passenger airbag assembly, see page RS–25 and RS–34. Be sure to follow the correct procedure.

RS0I1–01

INSTALLATION

NOTICE:

Never use airbag parts from another vehicle. When replacing parts, replace them with new parts.

HINT:

For step 2 to 8, refer to page BO–79.

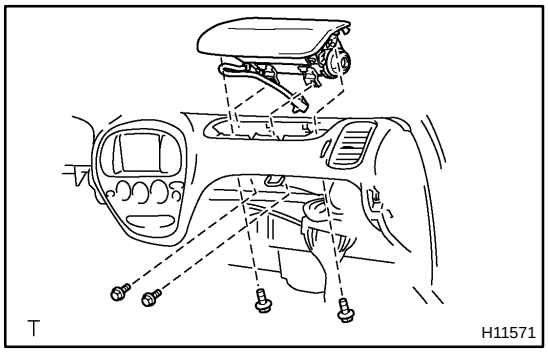

1. INSTALL FRONT PASSENGER AIRBAG ASSEMBLY

(a) Install the 2 bolts to hold the front passenger airbag assembly and instrument panel reinforcement.
Torque: 20 N·m (205 kgf·cm, 15 ft·lbf)

(b) Install the 2 bolts to hold the front passenger airbag assembly and instrument panel.
Torque: 5.0 N·m (51 kgf·cm, 44 in.·lbf)

CAUTION:

Make sure that no foreign objects are trapped between the airbag bag and the module.

NOTICE:

If the front passenger airbag assembly has been dropped, or there are cracks, dents or other defects in the case or connector, replace the front passenger airbag assembly with a new one.

2. INSTALL LOWER INSTRUMENT COVER

3. INSTALL LOWER FINISH PANEL

4. INSTALL LOWER CENTER COVER

5. INSTALL LOWER NO. 2 FINISH PANEL

6. INSTALL GLOVE COMPARTMENT DOOR

7. INSTALL COWL TRIMS

8. INSTALL FRONT DOOR SCUFF PLATES

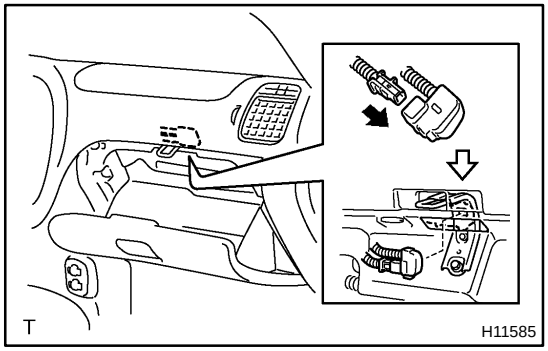

9. CONNECT AIRBAG CONNECTOR

(a) Connect the airbag connector as shown in the illustration.

(b) Attach the connector clamp to the reinforcement.

AIRBAG SENSOR ASSEMBLY

COMPONENTS

RS01G–16

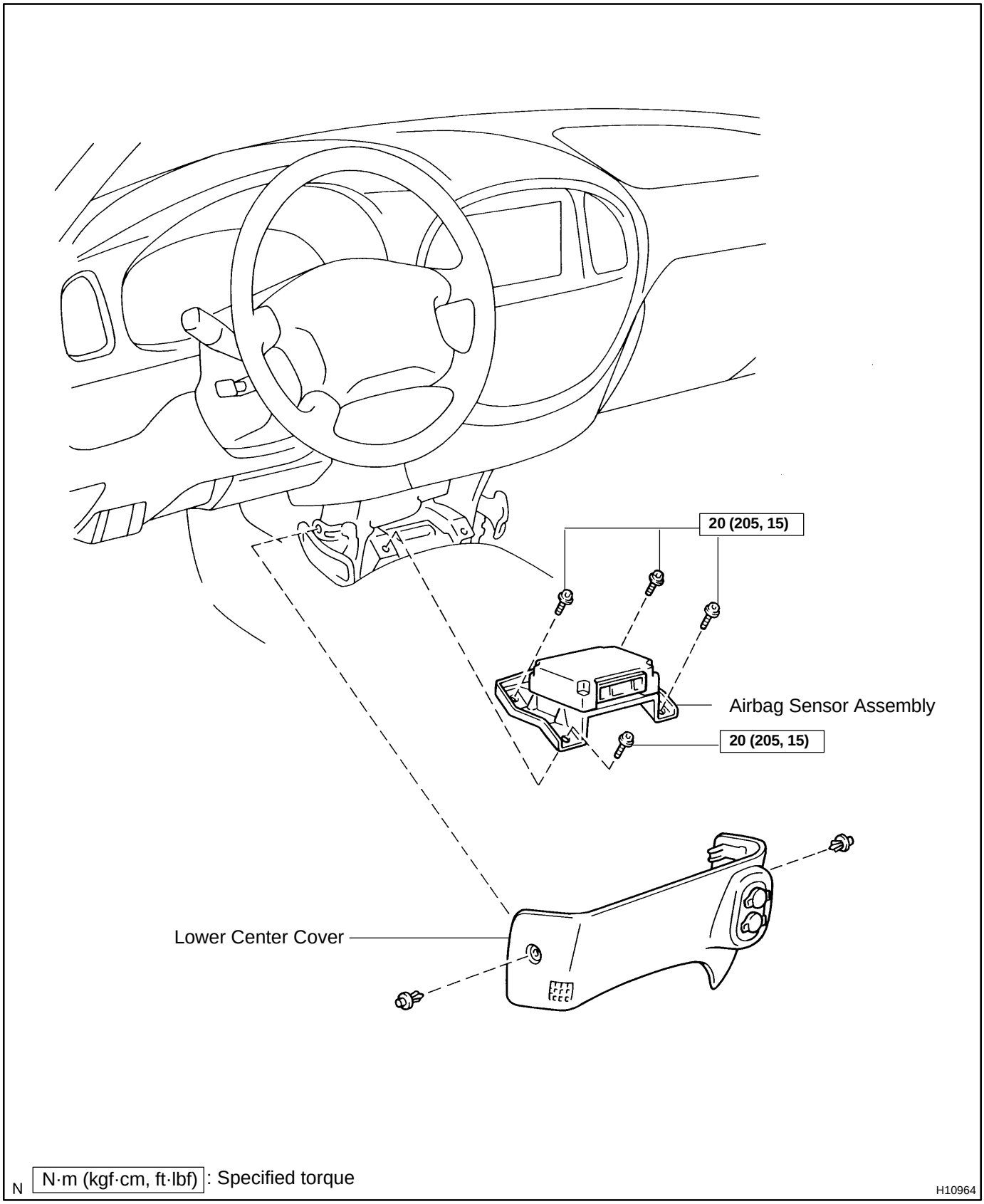

RS0EY–05

REMOVAL

NOTICE:

Do not open the cover or the case of the ECU and various electrical devices unless absolutely necessary (If the IC terminals are touched, the IC may be destroyed by static electricity.).

1. REMOVE LOWER CENTER COVER

Remove the 2 clips and lower center cover.

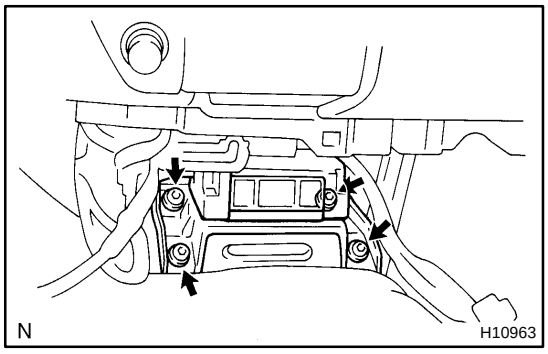

2. REMOVE AIRBAG SENSOR ASSEMBLY

(a) Disconnect the airbag sensor assembly connectors.

NOTICE:

Disconnect the connectors with the sensor assembly installed.

(b) Using a torx wrench, remove the 4 screws.

Torx wrench: T40 (Part No.09042–00020 or locally manufactured tool)

(c) Remove the airbag sensor assembly.

RS05T–03

INSPECTION

1. VEHICLE NOT INVOLVED IN COLLISION

Do a diagnostic system check (See page DI–490).

2. VEHICLE INVOLVED IN COLLISION AND AIRBAG IS NOT DEPLOYED

Do a diagnostic system check (See page DI–490).

3. VEHICLE INVOLVED IN COLLISION AND AIRBAG IS DEPLOYED

Replace the airbag sensor assembly (See page RS–36).

RS01J–15

REPLACEMENT

REPLACEMENT REQUIREMENTS

In the following cases, replace the airbag sensor assembly.

- If the SRS has been deployed in a collision.
- If the airbag sensor assembly has been found to be faulty in troubleshooting.
- If the airbag sensor assembly has been dropped.

CAUTION:

For removal and installation of the airbag sensor assembly, see page RS–36 and RS–39. Be sure to follow the correct procedure.

RS0EZ–05

INSTALLATION

NOTICE:

- **Never use SRS parts from another vehicle. When replacing parts, replace them with new parts.**
- **Never reuse the airbag sensor assembly involved in a collision when the airbag has deployed.**
- **Never repair a sensor in order to reuse it.**

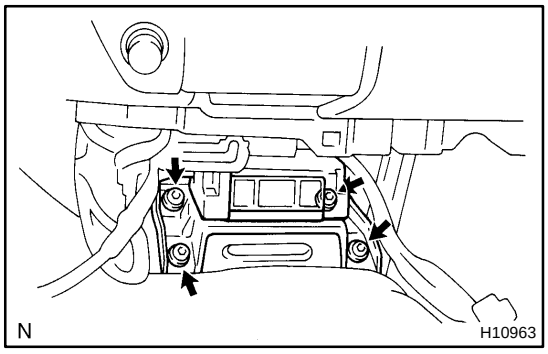

1. INSTALL AIRBAG SENSOR ASSEMBLY

(a) Using a torx wrench, install the airbag sensor assembly with 4 screws.

Torx wrench: T40 (Part No.09042–00020 or locally manufactured tool)

Torque: 20 N·m (205 kgf·cm, 15 ft·lbf)

(b) Connect the airbag sensor connectors.

NOTICE:

- **Connection of the connector is done after the sensor assembly has been installed.**
- **Make sure the sensor assembly is installed with the specified torque.**
- **If the sensor assembly has been dropped, or there are cracks, dents or other defects in the case, bracket or connector, replace the sensor assembly with a new one.**
- **When installing the sensor assembly, take care that the SRS wiring does not interfere with other parts and is not pinched between other parts.**
- **After installing , shake the sensor assembly to check that there is no looseness.**

2. INSTALL LOWER CENTER COVER

FRONT AIRBAG SENSOR

RS01L–22

COMPONENTS

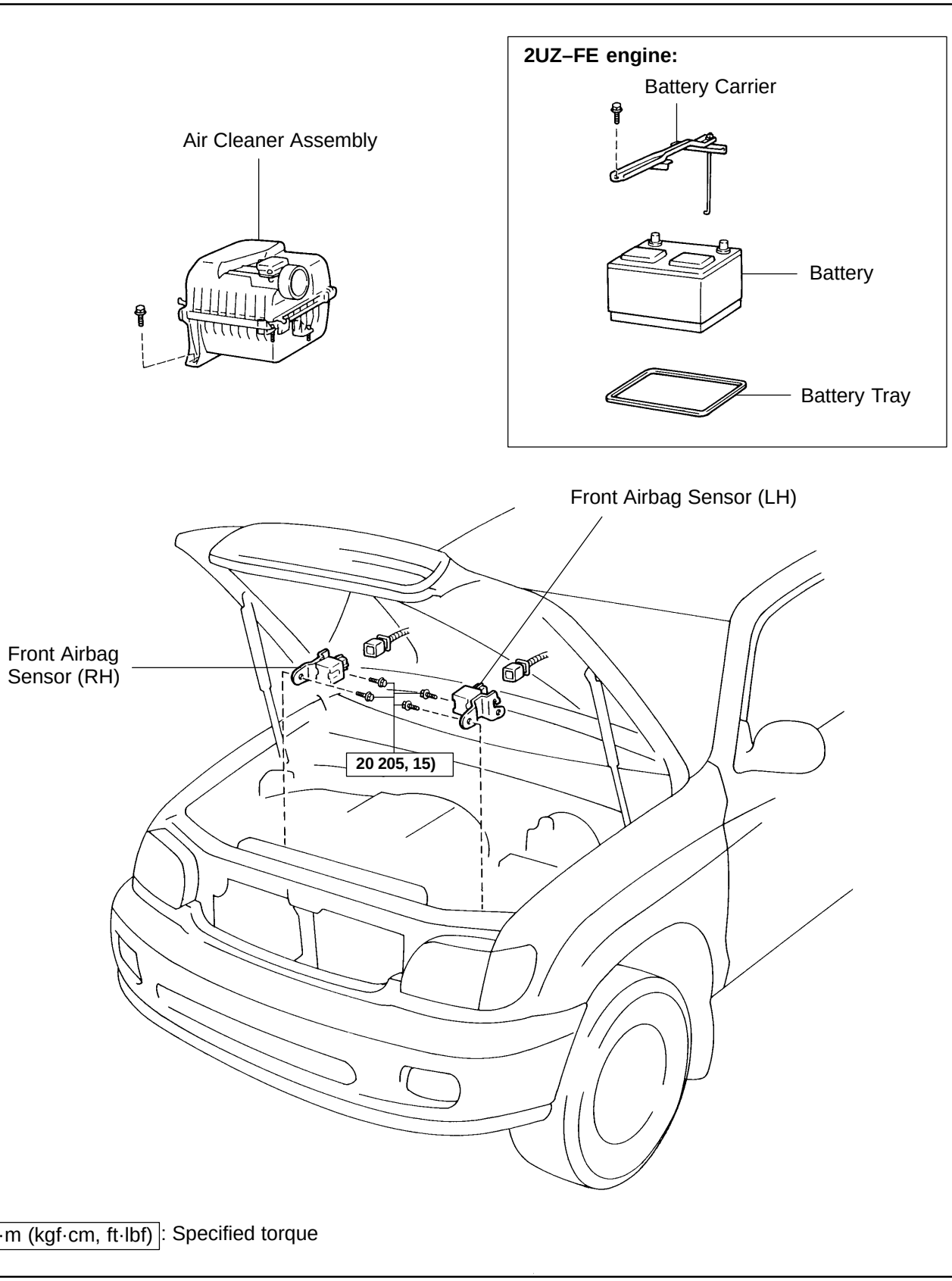

N·m (kgf·cm, ft·lbf): Specified torque

N

H10946

RS0I2–01

REMOVAL

NOTICE:

- **If the wiring connector of the SRS is disconnected with the ignition switch at ON or ACC position, DTCs will be recorded.**
- **Never use SRS parts from another vehicle. When replacing parts, replace them with new parts.**
- **Never reuse the sensor involved in a collision when the SRS has deployed.**
- **Never repair a sensor in order to reuse it.**

1. LH:

REMOVE FRONT AIRBAG SENSOR

(a) 2UZ–FE:

Remove the battery carrier, battery and battery tray.

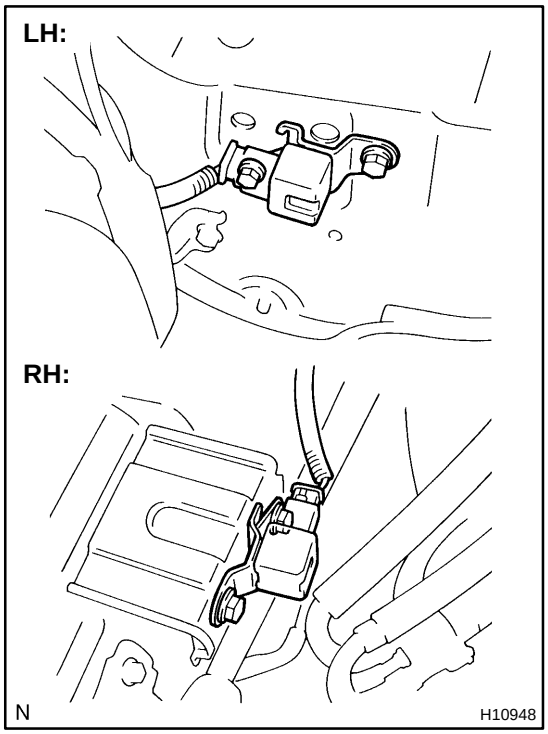

(b) Disconnect the front airbag sensor connector.

NOTICE:

Disconnect the connector with sensor assembly installed.

(c) Remove the 2 bolts and front airbag sensor.

2. RH:

REMOVE FRONT AIRBAG SENSOR

(a) Remove the air cleaner assembly.

(b) Disconnect the front airbag sensor connector.

NOTICE:

Disconnect the connector with sensor assembly installed.

(c) Remove the 2 bolts and front airbag sensor.

RS01N–23

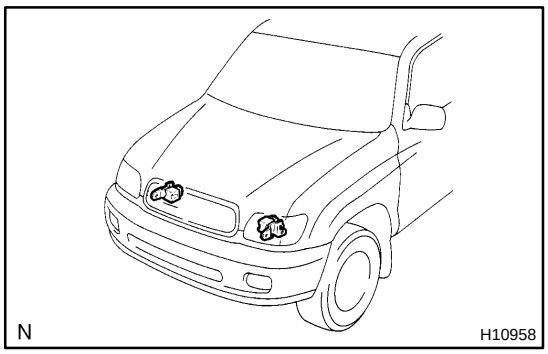

INSPECTION

1. VEHICLES NOT INVOLVED IN COLLISION

Do a diagnostic system check (See page DI–490).

2. VEHICLES INVOLVED IN COLLISION

(a) Do a diagnostic system check (See page DI–490).

(b) If the front fender of the car or its periphery is damaged, do a visual check for damage to the front airbag sensor, which includes the following items even if the airbag was not deployed:

- ▲ Bracket deformation
- ▲ Paint peeling off the bracket
- ▲ Cracks, dents or chips in the case
- ▲ Cracks, dents, chipping and scratches in the connector
- ▲ Peeling off of the label or damage to the serial number

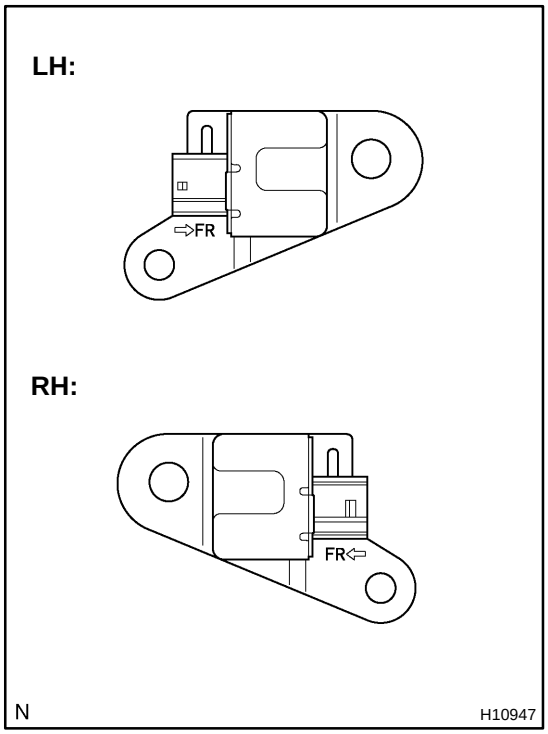

RS01O–15

REPLACEMENT

REPLACEMENT REQUIREMENTS

In the following cases, replace the front airbag sensor.

- If the SRS has been deployed in a collision (Replace both the left and right airbag sensors.).
- If the front airbag sensor has been found to be faulty in troubleshooting.
- If the front airbag sensor has been found to be faulty during checking items (See page RS–42).
- If the front airbag sensor has been dropped.

CAUTION:

For removal and installation of the front airbag sensor, see page RS–41 and RS–44. Be sure to follow the correct procedure.

RS0I3–01

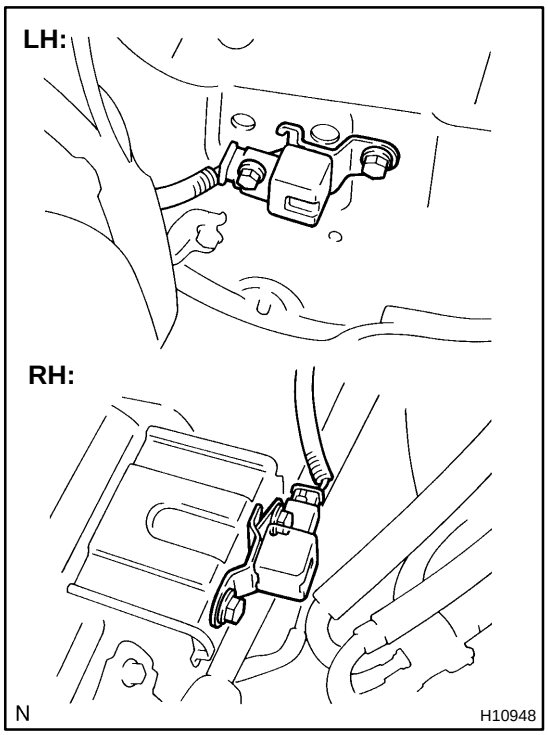

INSTALLATION

INSTALL FRONT AIRBAG SENSORS

(a) Install the front airbag sensors with the 4 bolts.
Torque: 20 N·m (205 kgf·cm, 15 ft·lbf)

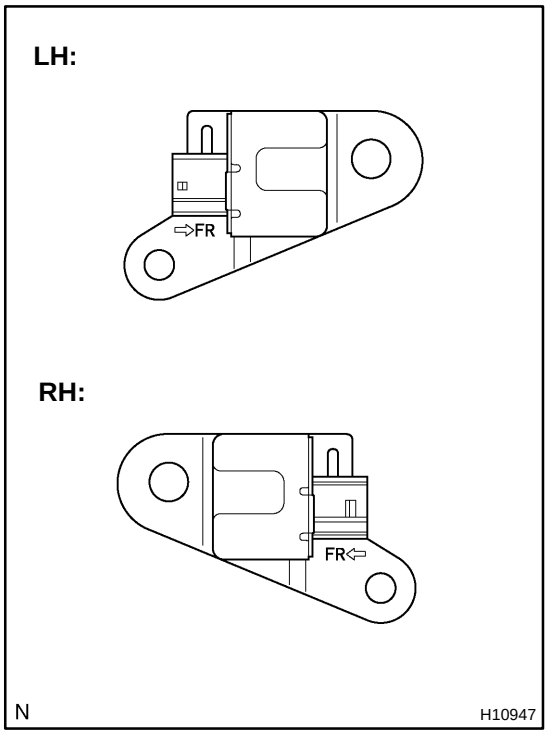

HINT:
Install the front airbag sensor with the arrow on the sensor facing toward the front of the vehicle.

NOTICE:

- **Connection of the connector is done after the sensor has been installed.**
- **Make sure the sensor is installed with the specified torque.**
- **If the sensor has been dropped, or there are cracks, dents or other defects in the case, brackets or connector, replace the removed sensor with a new one.**
- **The front sensor is equipped with an electrical connection check mechanism. Be sure to lock this mechanism securely when connecting the connector. If the connector is not securely locked, a malfunction code will be detected by the diagnostic system.**

(b) Connect the front airbag sensor connectors.
(c) Install the air cleaner assembly.
(d) 2UZ–FE engine:
Install the battery tray, battery and battery carrier.

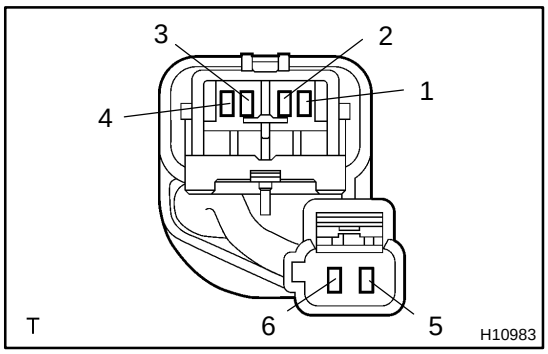

PASSENGER AIRBAG MANUAL ON–OFF SWITCH

RS0I4–01

INSPECTION

1. INSPECT PASSENGER AIRBAG MANUAL ON–OFF SWITCH

HINT:

Release the airbag activation prevention mechanism of the passenger airbag manual on–off switch connector on the airbag sensor assembly side (See page DI–490).

Switch position	Tester connection	Specified condition
ON	1 – 2 3 – 4	Continuity
	2 – 3 5 – 6	No continuity
OFF	1 – 2, 5 – 6	Continuity
	3 – 4	No continuity
	2 – 3	Resistance 2.42 – 2.45 Ω

If continuity is not as specified, replace the switch.

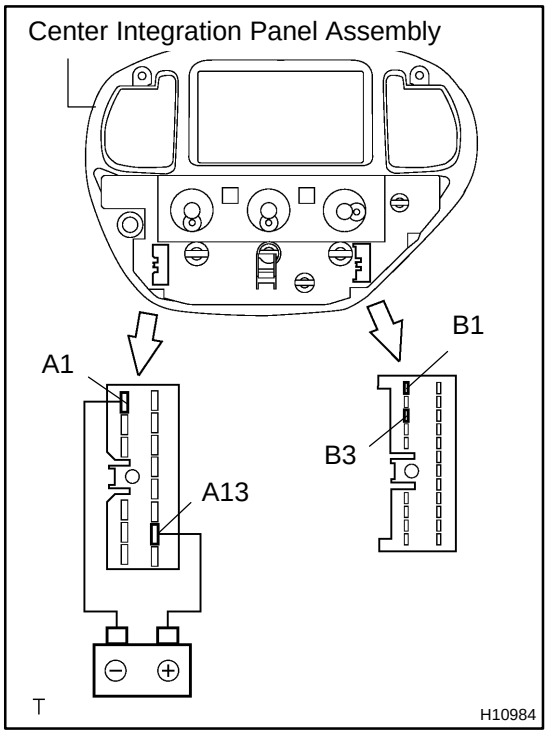

2. INSPECT PASSENGER AIRBAG MANUAL ON–OFF INDICATOR OPERATION

(a) Using a service wire, connect B1 and B3.

(b) Connect the positive (+) lead from the battery to terminal A13 and negative (–) lead to terminal A1.

(c) Check that the indicator light lights up.

If the operation is not as specified, replace the indicator.

WIRE HARNESS AND CONNECTOR

RS01V–18

LOCATION

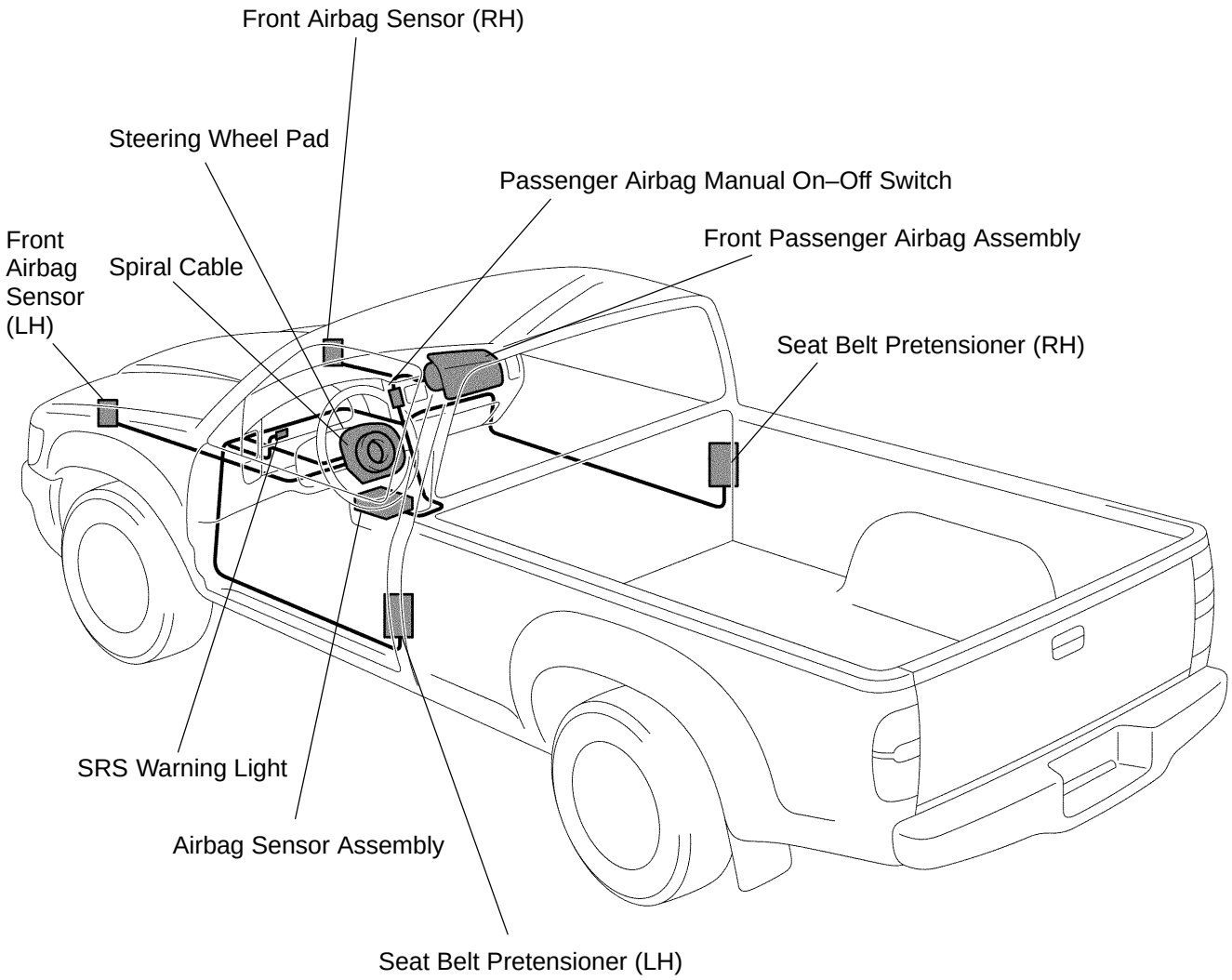

P

H10995

RS01W–12

INSPECTION

HINT:

The SRS wire harness is integrated with the instrument panel wire harness assembly. All the connectors in the system are a standard yellow color.

1. VEHICLE NOT INVOLVED IN COLLISION

Do a diagnostic system check (See page DI–490).

2. VEHICLE INVOLVED IN COLLISION

(a) Do a diagnostic system check (See page DI–490).

(b) Check breaks in all wires of the SRS wire harness, and exposed conductors.

(c) Check to see if the SRS wire harness connectors are cracked or chipped.

RS01X–12

REPLACEMENT

In the following cases, replace the wire harness or connector.

- If any part of the SRS wire harness or any connector has been found to be faulty in troubleshooting.
- If any part of the SRS wire harness or any connector has been found to be faulty during checking items (See page RS–47).

CAUTION:

If the wire harness used in the SRS is damaged, replace the whole wire harness assembly.

AUTOMATIC TRANSMISSION SYSTEM

AT01U–01

PRECAUTION

If the vehicle is equipped with a mobile communication system, refer to the precautions in the IN section.

AT007–07

OPERATION

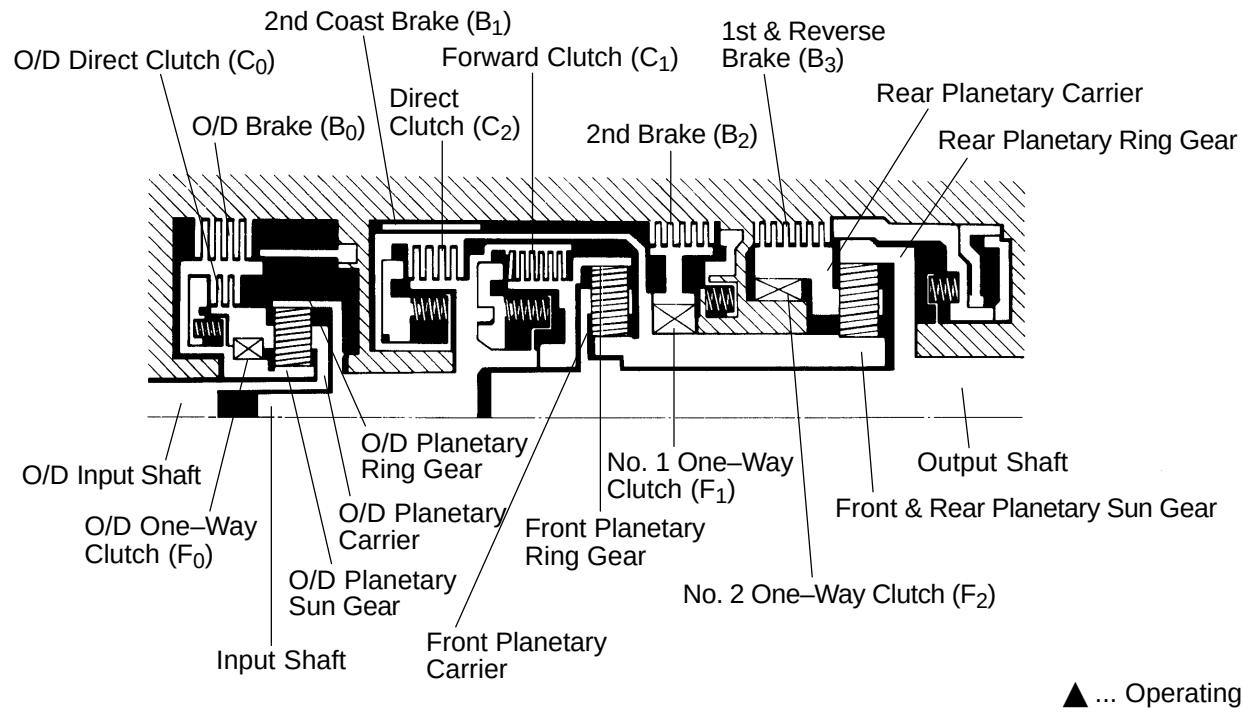

AT2157

▲ ... Operating

Shift lever position	Gear position	C_0	C_1	C_2	B_0	B_1	B_2	B_3	F_0	F_1	F_2
P	Parking	▲									
R	Reverse	▲		▲				▲	▲		
N	Neutral	▲									
D	1st	▲	▲						▲		▲
	2nd	▲	▲				▲		▲	▲	
	3rd	▲	▲	▲			▲		▲		
	O/D		▲	▲	▲		▲				
2	1st	▲	▲						▲		▲
	2nd	▲	▲			▲	▲		▲	▲	
	*1 3rd	▲	▲	▲			▲		▲		
L	1st	▲	▲					▲	▲		▲
	*2 2nd	▲	▲			▲	▲		▲	▲	

*1: Down–shift only in the 2 position and 3rd gear — no up–shift.
*2: Down–shift only in the L position and 2nd gear — no up–shift.

V07130

EXTENSION HOUSING OIL SEAL (A340E)

AT022–04

ON–VEHICLE REPAIR

1. REMOVE PROPELLER SHAFT (See page PR–3)

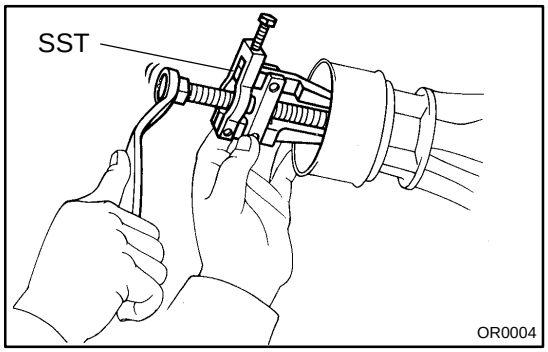

2. REMOVE REAR OIL SEAL

NOTICE:

Clean the extension housing before removing the oil seal.

Using SST, remove the oil seal.

SST 09308–10010

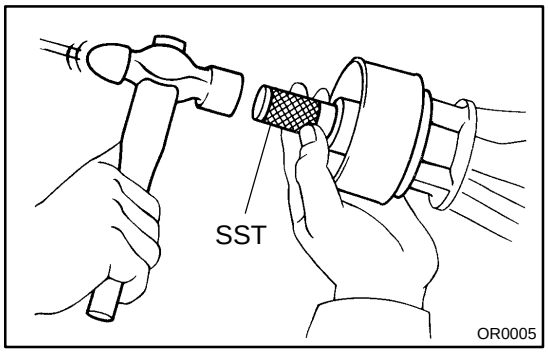

3. INSTALL OIL SEAL

(a) Using SST and a hammer, carefully drive a new oil seal in as far as it will go.

SST 09325–40010

(b) Coat the lip of the oil seal with MP grease.

4. INSTALL PROPELLER SHAFT (See page PR–8)

5. CHECK FLUID LEVEL (See page DI–384)

SENSOR ROTOR (A340E)

AT0JN–01

ON–VEHICLE REPAIR

1. **REMOVE PROPELLER SHAFT (See page PR–3)**
2. **REMOVE NO. 1 VEHICLE SPEED SENSOR AND SPEEDOMETER DRIVEN GEAR (See page AT–7)**
3. **REMOVE NO. 2 VEHICLE SPEED SENSOR (See page AT–7)**
4. **JACK UP TRANSMISSION SLIGHTLY**

Securely support the transmission on a transmission jack. Lift the transmission slightly from the crossmember.

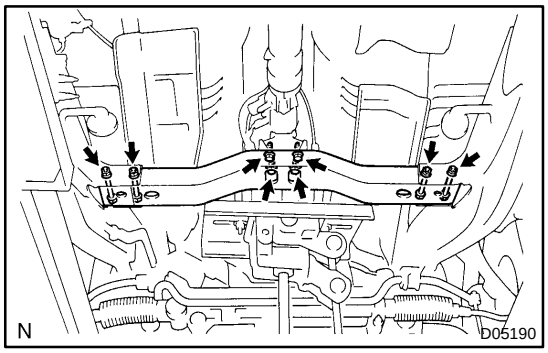

5. **REMOVE CROSSMEMBER**

(a) Remove the 4 bolts on the rear mounting side from the engine rear mounting insulator.

(b) Remove the 4 nuts, bolts, washers and crossmember.



6. **REMOVE ENGINE REAR MOUNTING INSULATOR FROM EXTENSION HOUSING**

Remove the 4 bolts and engine rear mounting insulator from the extension housing.

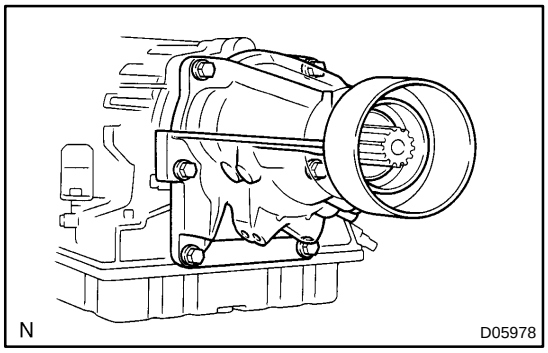

7. **REMOVE EXTENSION HOUSING AND GASKET**

Remove the 6 bolts, gasket and extension housing.

If necessary, tap the extension housing with a plastic hammer or a block of wood to loosen it.

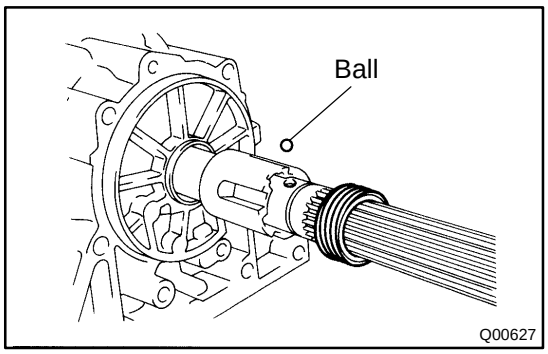

8. 5VZ–FE:
REMOVE SPEEDOMETER DRIVE GEAR AND BALL
(a) Using a snap ring expander, remove the snap ring.
(b) Remove the speedometer drive gear and ball.

9. 2UZ–FE:
REMOVE SPEEDOMETER DRIVE GEAR
(a) Using a snap ring expander, remove the snap ring.
(b) Remove the speedometer drive gear.

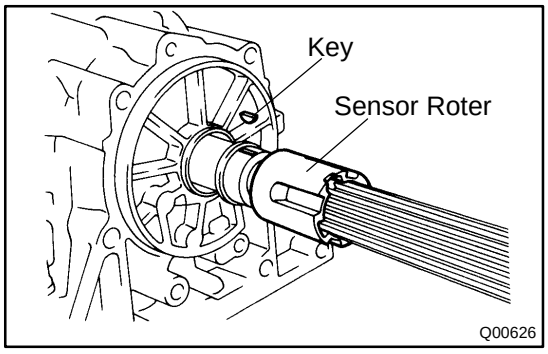

10. REMOVE SENSOR ROTOR AND KEY
(a) Remove the sensor rotor and key.
(b) Using a snap ring expander, remove the snap ring.

11. INSTALL SENSOR ROTOR AND KEY
(a) Using a snap ring expander, install the snap ring.
(b) Install the key and sensor rotor.

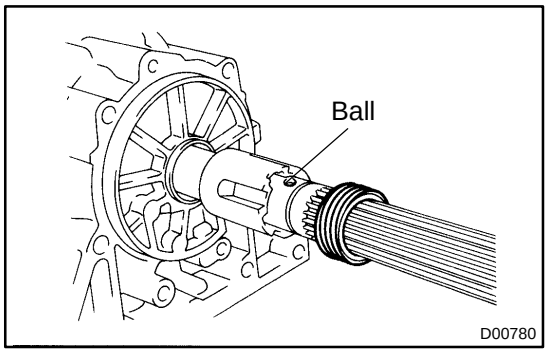

12. 5VZ–FE:
INSTALL SPEEDOMETER DRIVE GEAR AND BALL
(a) Install the speedometer drive gear and ball.
(b) Using a snap ring expander, install the snap ring.

13. 2UZ–FE:
INSTALL SPEEDOMETER DRIVE GEAR
(a) Install the speedometer drive gear.
(b) Using a snap ring expander, install the snap ring.

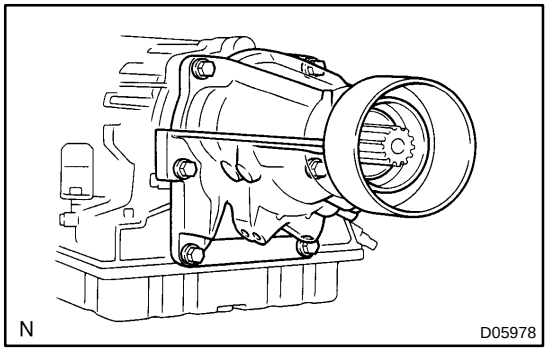

14. INSTALL EXTENSION HOUSING AND GASKET
(a) Apply sealant or equivalent to the 6 bolt thereads.
Sealant:
Part No. 08833 – 00080, THREE BOND 1344, LOCTITE 242 or equivalent
(b) Install the extension housing with a new gasket to the case.
(c) Install the 6 bolts.
Torque: 36 N·m (370 kgf·cm, 27 ft·lbf)

HINT:
The 2 lower bolts are shorter.

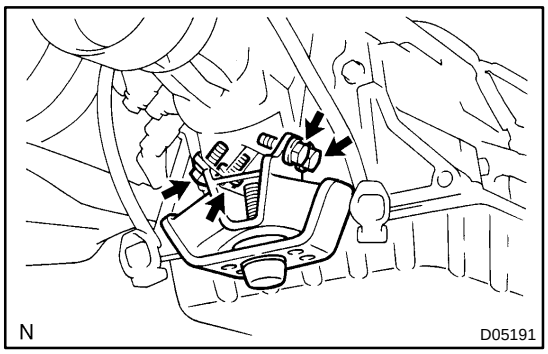

15. INSTALL ENGINE REAR MOUNTING INSULATOR TO EXTENSION HOUSING

Install the engine rear mounting insulator with the 4 bolts.

Torque: 65 N·m (660 kgf·cm, 48 ft·lbf)

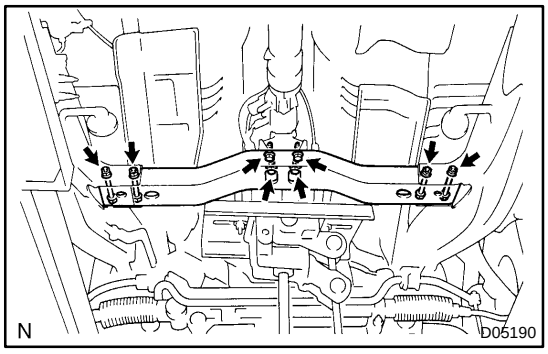

16. INSTALL CROSSMEMBER

(a) Install the crossmember with the 4 washers, bolts and nuts.

Torque: 72 N·m (734 kgf·cm, 53 ft·lbf)

(b) Install the 4 bolts on the rear mounting side to the engine rear mounting insulator.

Torque: 18 N·m (185 kgf·cm, 13 ft·lbf)

17. INSTALL NO. 2 VEHICLE SPEED SENSOR (See page AT–7)

18. INSTALL SPEEDOMETER DRIVEN GEAR AND NO. 1 VEHICLE SPEED SENSOR (See page AT–7)

19. INSTALL PROPELLER SHAFT (See page PR–8)

20. FILL ATF AND CHECK FLUID LEVEL (See page DI–384)

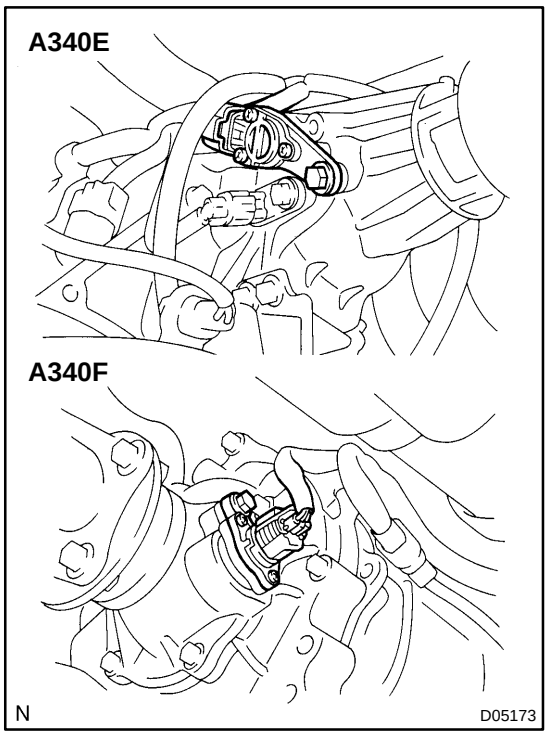

VEHICLE SPEED SENSOR

AT0JO–02

ON–VEHICLE REPAIR

1. DISCONNECT NO. 1 VEHICLE SPEED SENSOR CONNECTOR

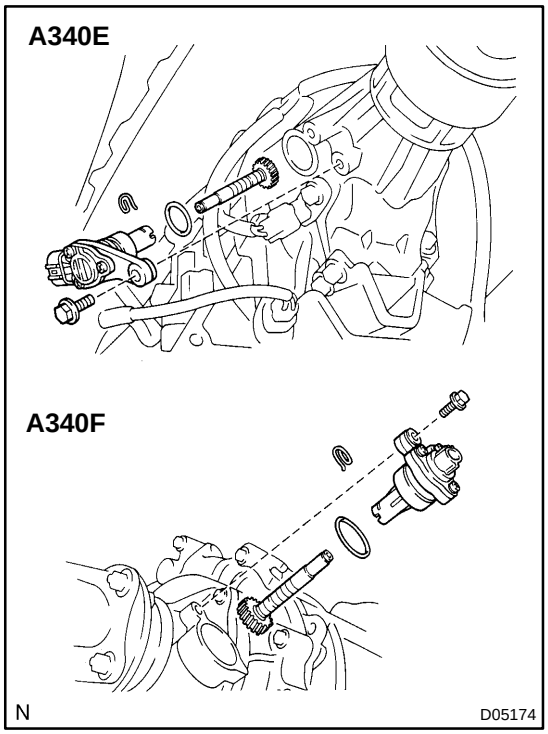

2. REMOVE NO. 1 VEHICLE SPEED SENSOR

Remove the bolt and No.1 vehicle speed sensor.

3. DISASSEMBLE NO. 1 VEHICLE SPEED SENSOR

(a) Remove the O–ring from the speedometer driven gear assembly.

(b) Remove the clip and speedometer driven gear from the speedometer driven gear sleeve.

4. ASSEMBLE NO. 1 VEHICLE SPEED SENSOR

(a) Install the speedometer driven gear and clip to the speedometer driven gear sleeve.

(b) Coat a new O–ring with ATF.

(c) Install the O–ring to the speedometer driven gear assembly.

5. INSTALL NO. 1 VEHICLE SPEED SENSOR

Install the No.1 vehicle speed sensor with the bolt.

Torque: 16 N·m (160 kgf·cm, 12 ft·lbf)

6. CONNECT NO. 1 VEHICLE SPEED SENSOR CONNECTOR

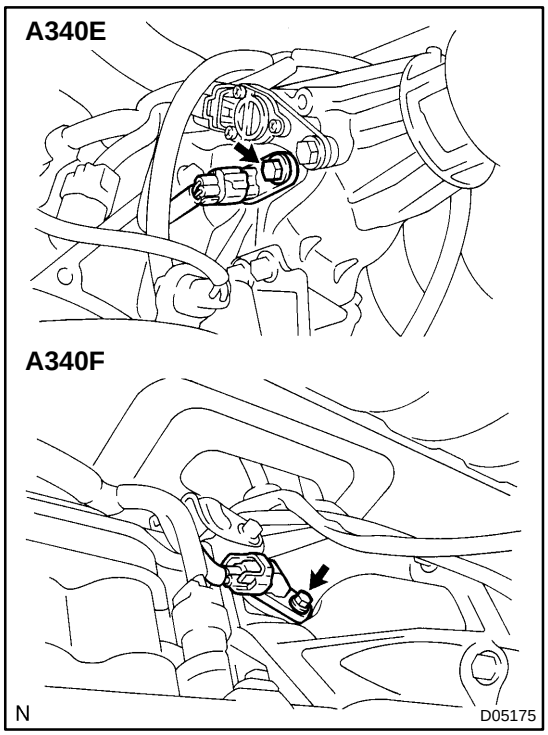

7. DISCONNECT NO. 2 VEHICLE SPEED SENSOR CONNECTOR

8. REMOVE NO. 2 VEHICLE SPEED SENSOR

(a) Remove the bolt and No. 2 vehicle speed sensor.

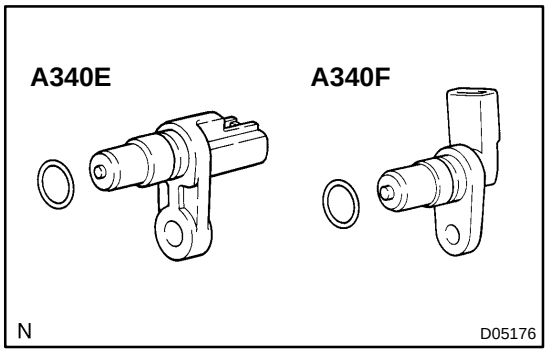

(b) Remove the O–ring from the No. 2 vehicle speed sensor.

9. INSTALL NO. 2 VEHICLE SPEED SENSOR

(a) Coat a new O–ring with ATF and install it to the No. 2 vehicle speed sensor.

(b) Install the No. 2 vehicle speed sensor with the bolt.
Torque: 5.4 N·m (55 kgf·cm, 48 in.·lbf)

10. CONNECT NO. 2 VEHICLE SPEED SENSOR CONNECTOR

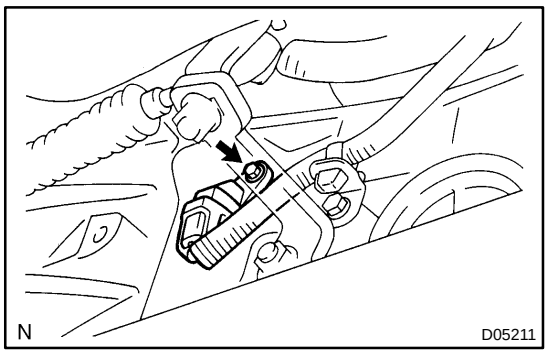

O/D DIRECT CLUTCH SPEED SENSOR (2UZ–FE)

AT03Y–04

ON–VEHICLE REPAIR

1. DISCONNECT O/D DIRECT CLUTCH SPEED SENSOR CONNECTOR

2. REMOVE O/D DIRECT CLUTCH SPEED SENSOR

(a) Remove the bolt and O/D direct clutch speed sensor.

(b) Remove the O–ring from the O/D direct clutch speed sensor.

3. INSTALL O/D DIRECT CLUTCH SPEED SENSOR

(a) Coat a new O–ring with ATF and install it to the O/D direct clutch speed sensor.

(b) Install the O/D direct clutch speed sensor to the transmission case with the bolt.

Torque: 5.4 N·m (55 kgf·cm, 48 in.·lbf)

4. CONNECT O/D DIRECT CLUTCH SPEED SENSOR CONNECTOR

ATF TEMPERATURE SENSOR

AT0JP–02

ON–VEHICLE REPAIR

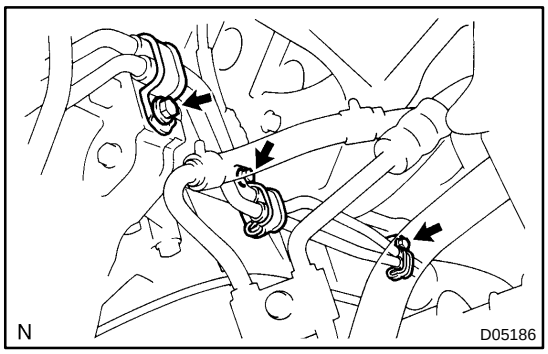

1. 5VZ–FE:
DISCONNECT OIL COOLER PIPE

(a) Remove the 3 bolts and clamps.

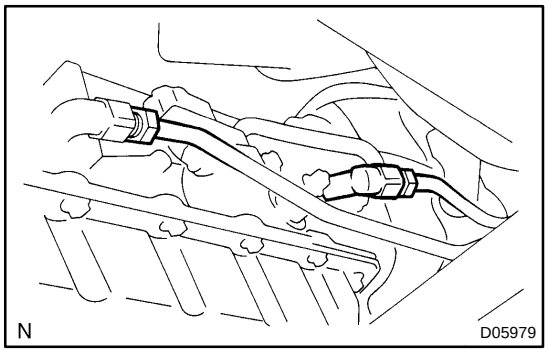

(b) Disconnect the oil cooler pipe.
(c) Remove the elbow from the transmission.

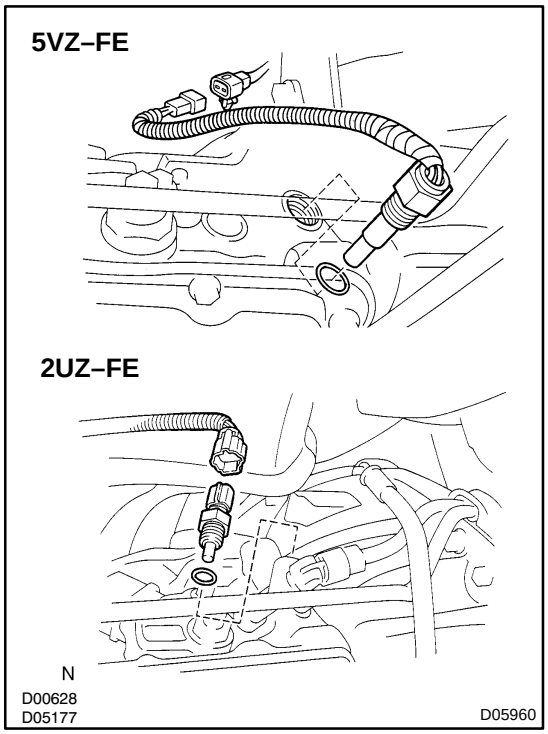

2. DISCONNECT ATF TEMPERATURE SENSOR CONNECTOR

3. REMOVE ATF TEMPERATURE SENSOR

(a) Remove the ATF temperature sensor.
(b) Remove the O–ring from the ATF temperature sensor.

4. INSTALL ATF TEMPERATURE SENSOR

(a) Coat a new O–ring with ATF and install it to the ATF temperature sensor.
(b) Install the ATF temperature sensor.
Torque: 15 N·m (150 kgf·cm, 11 ft·lbf)

5. CONNECT ATF TEMPERATURE SENSOR CONNECTOR

NOTICE:
Be careful not to twist the wire harness.

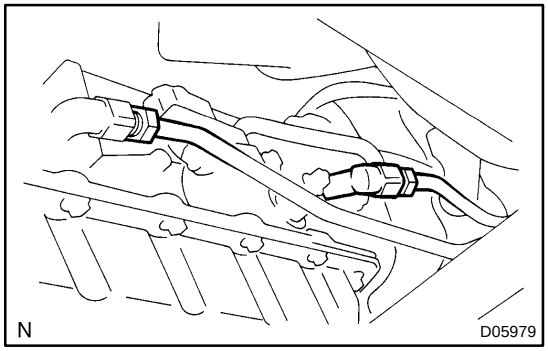

6. 5VZ–FE:
CONNECT OIL COOLER PIPE

(a) Install the elbow to the transmission.
(b) Connect the oil cooler pipe.
Torque: 34 N·m (350 kgf·cm, 25 ft·lbf)

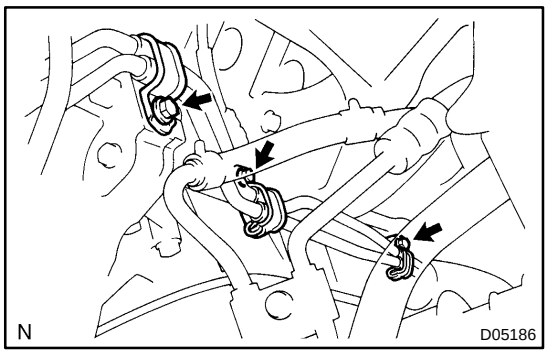

(c) Install the 3 clamps with the 3 bolts.

7. FILL ATF AND CHECK FLUID LEVEL
(See page DI–384)

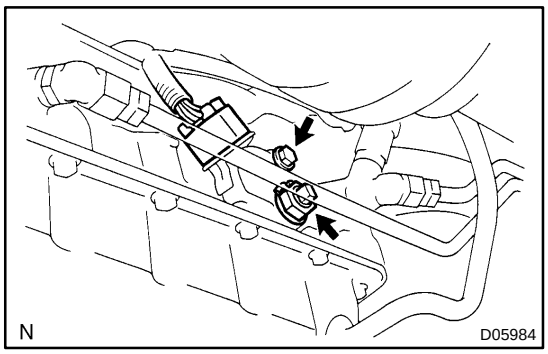

PARK/NEUTRAL POSITION (PNP) SWITCH

AT01Y–05

ON–VEHICLE REPAIR

1. DISCONNECT OIL COOLER PIPE
(See page 5VZ–FE AT–28, 2UZ–FE AT–35)

2. REMOVE PARK/NEUTRAL POSITION SWITCH

(a) Disconnect the connector.
(b) Pry off the lock washer and remove the nut.
(c) Remove the bolt and park/neutral position switch.

3. INSTALL PARK/NEUTRAL POSITION SWITCH

(a) Install the park/neutral position switch and bolt.
Torque: 13 N·m (130 kgf·cm, 9 ft·lbf)
(b) Install a new lock plate and the nut.
Torque: 3.9 N·m (40 kgf·cm, 35 in.·lbf)
(c) Bend claws on the lock plate to fix the nut.
(d) Connect the connector.
(e) Check that the engine can be started with the shift lever only in the N or P position, but not in other positions.

If not as stated above, carry out the adjustment procedure (See page DI–384).

4. CONNECT OIL COOLER PIPE
(See page 5VZ–FE AT–32, 2UZ–FE AT–38)

5. FILL ATF AND CHECK FLUID LEVEL
(See page DI–384)

6. TEST DRIVE VEHICLE

VALVE BODY ASSEMBLY

AT10H–01

ON–VEHICLE REPAIR

NOTICE:

- **When working with FIPG material, you must observe the followings.**
- **Using a razor blade and a gasket scraper, remove all old FIPG material from the sealing surfaces.**
- **Thoroughly clean all components to remove all loose material. Clean both sealing surfaces with a non–residue solvent.**
- **Apply FIPG in an approx. 1 mm (0.04 in.) wide bead along the sealing surface.**
- **Parts must be assembled within 10 minutes of application. Otherwise, the FIPG material must be removed and reapplied.**

1. REMOVE DAIN PLUG AND DRAIN ATF

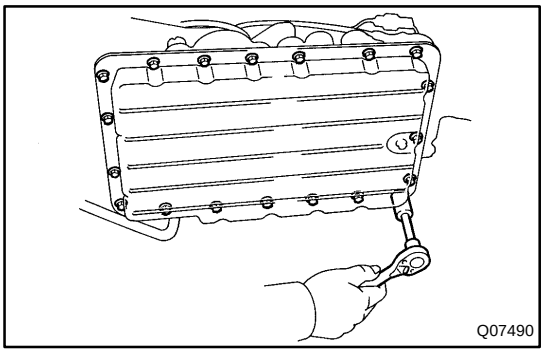
Q07490

2. REMOVE OIL PAN

NOTICE:

Some fluid will remain in the oil pan.

(a) Remove the 19 bolts.

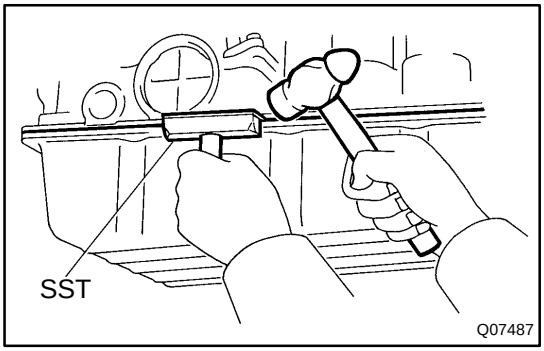

Q07487

(b) Install the blade of SST between the transmission case and oil pan, cut off applied sealer and remove the oil pan.
SST 09032–00100

NOTICE:

When removing the oil pan, be careful not to damage the oil pan flange.

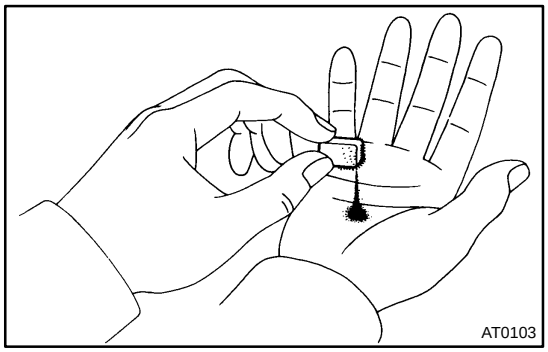
AT0103

3. EXAMINE PARTICLES IN PAN

Remove the magnets and use them to collect steel particles. Carefully look at the foreign matter and particles in the pan and on the magnets to anticipate the type of wear you will find in the transmission.

Steel (magnetic)...bearing, gear and clutch plate wear

Brass (non–magnetic)...bushing wear

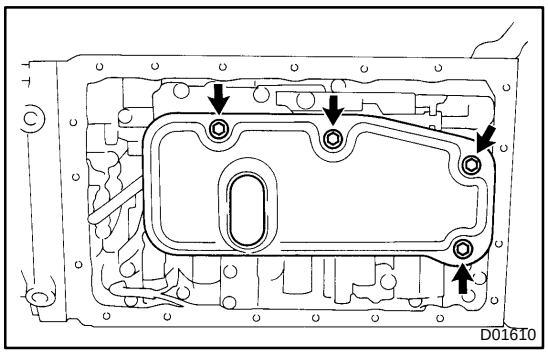

4. REMOVE OIL STRAINER

NOTICE:

Be careful as some fluid will come out of the oil strainer.

(a) Separate the solenoid wire.

(b) Remove the 4 bolts, oil strainer and 3 gaskets.

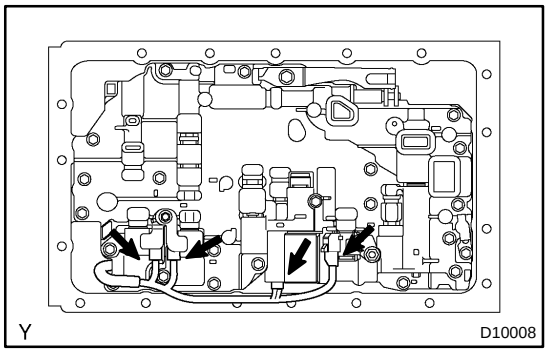

5. DISCONNECT 4 CONNECTORS FROM EACH SHIFT SOLENOID VALVE

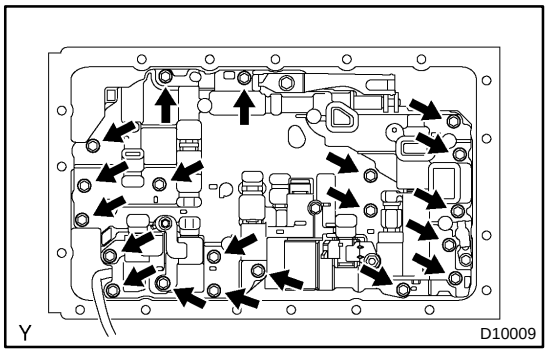

6. REMOVE VALVE BODY

Remove the 20 bolts and valve body.

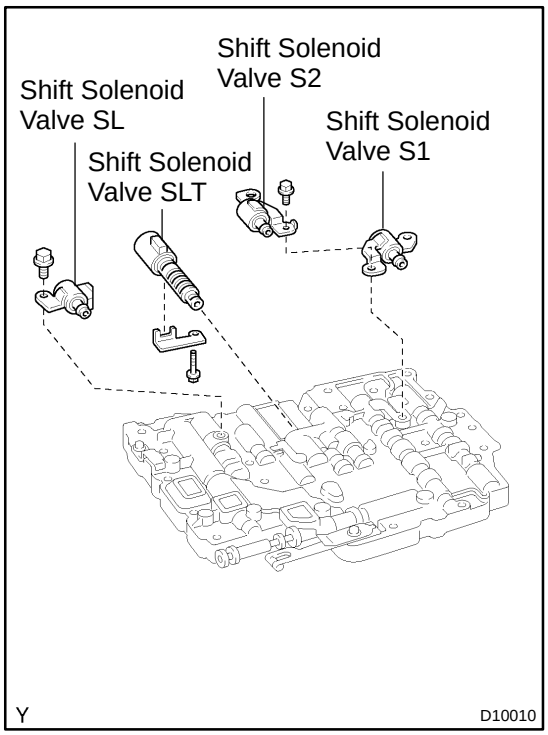

7. REMOVE SHIFT SOLENOID VALVE

(a) Remove the 2 bolts and 3 shift solenoid valves.

(b) Turn the valve body, remove the bolt, lock plate and shift solenoid valve.

(c) Remove the 3 O–rings from the 3 solenoid valves.

8. REMOVE DETENT SPRING

9. REMOVE MANUAL VALVE

10. INSTALL MANUAL VALVE

11. INSTALL DETENT SPRING

Torque: 10 N·m (100 kgf·cm, 7 ft·lbf)

12. INSTALL SOLENOID VALVE

(a) Install 3 new O–rings to 3 shift solenoid valves.

(b) Install the shift solenoid valve and lock plate with the bolt.

Torque: 10 N·m (100 kgf·cm, 7 ft·lbf)

(c) Install the 3 shift solenoid valves with the 2 bolts.

Torque: 10 N·m (100 kgf·cm, 7 ft·lbf)

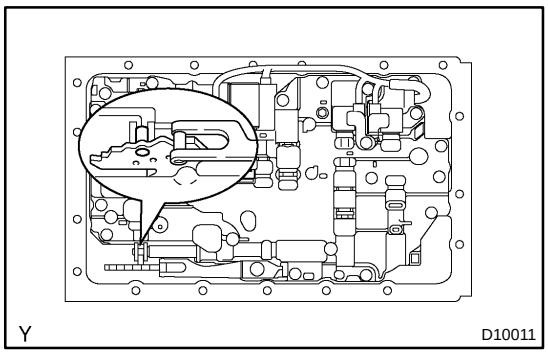

13. INSTALL VALVE BODY

(a) Align the groove of the manual valve with the pin of the lever.

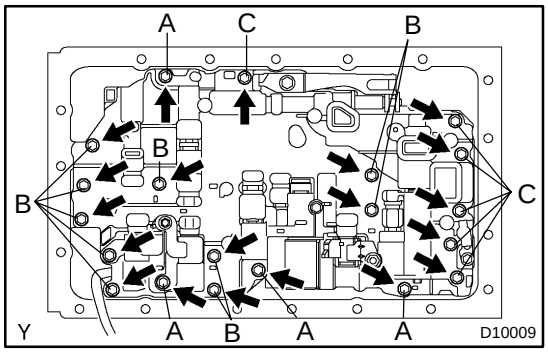

(b) Install the valve body with the 20 bolts.
Torque: 11 N·m (110 kgf·cm, 8 ft·lbf)
Bolt length:
Bolt A: 23 mm (0.91 in.)
Bolt B: 28 mm (1.10 in.)
Bolt C: 36 mm (1.42 in.)

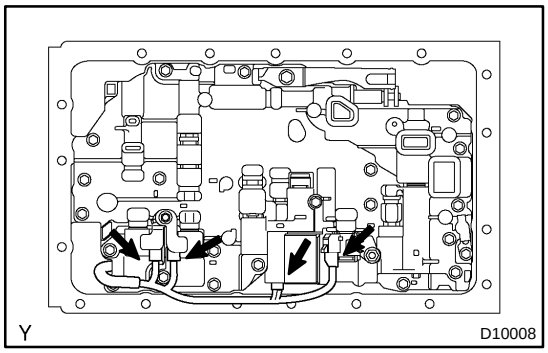

14. CONNECT 4 CONNECTORS TO SHIFT SOLENOID VALVES

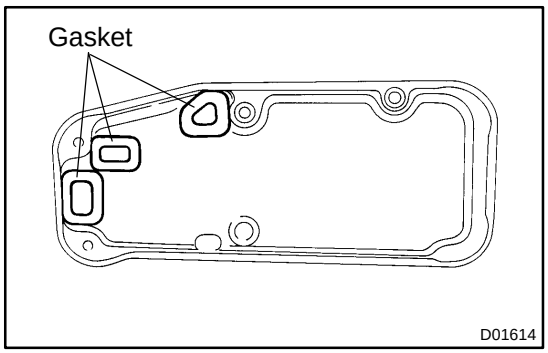

15. INSTALL OIL STRAINER

(a) Install 3 new gaskets.

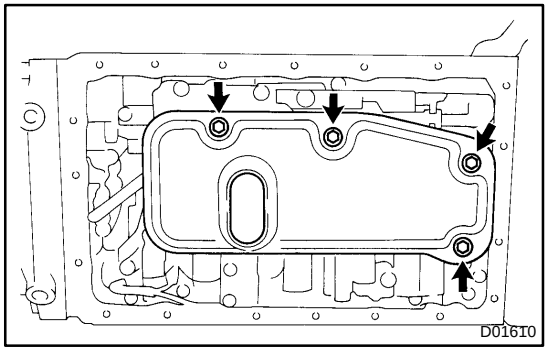

(b) Install the oil strainer with the 4 bolts.
Torque: 10 N·m (100 kgf·cm, 7 ft·lbf)

(c) Clamp solenoid wire.

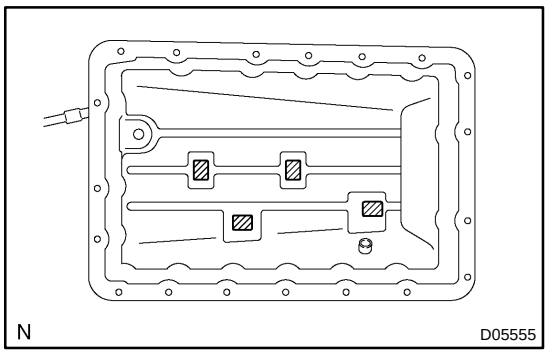

16. INSTALL OIL PAN

HINT:

Remove any packing material and be careful not to drop oil on the contacting surfaces of the transmission case and oil pan.

(a) Install the 4 magnets in the indications of the oil pan.

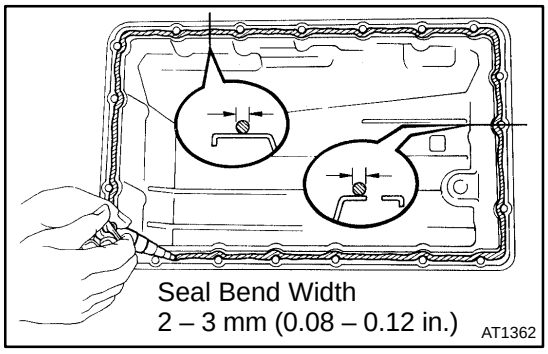

(b) Apply FIPG to the oil pan, as shown in the illustration.
FIPG: Part No. 08826–00090, THREE BOND 1281 or equivalent

(c) Install the 19 bolts and oil pan.
Torque: 7.4 N·m (75 kgf·cm, 65 in·lbf)

17. FILL AND CHECK ATF

(a) Install a new gasket and the drain plug.
Torque: 20 N·m (205 kgf·cm, 15 ft·lbf)

(b) Fill new fluid through the filler pipe (See page DI–384).

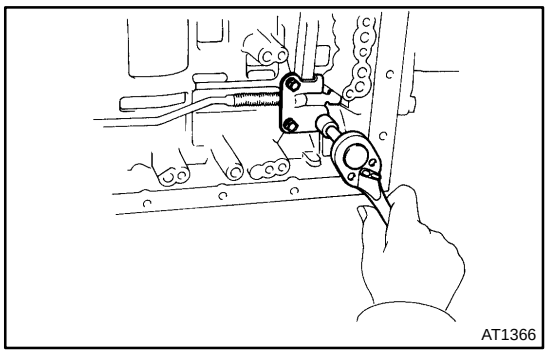

PARKING LOCK PAWL

AT020–05

ON–VEHICLE REPAIR

1. REMOVE VALVE BODY (See page AT–13)

2. REMOVE PARKING LOCK PAWL BRACKET

Remove the 3 bolts and parking lock pawl bracket.

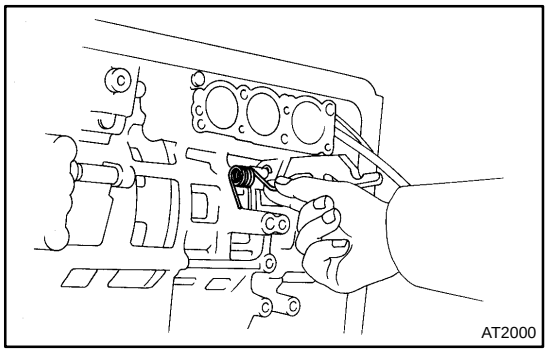

3. REMOVE SPRING FROM PARKING LOCK PAWL SHAFT

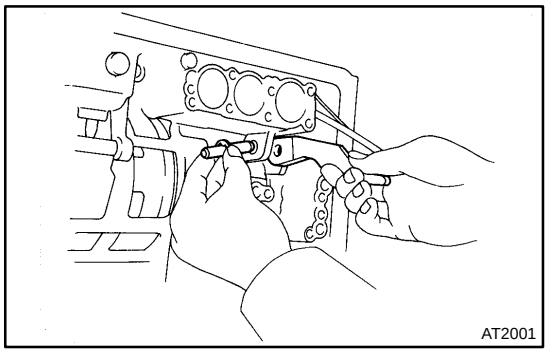

4. REMOVE PARKING LOCK PAWL AND SHAFT

5. INSTALL PARKING LOCK PAWL AND SHAFT

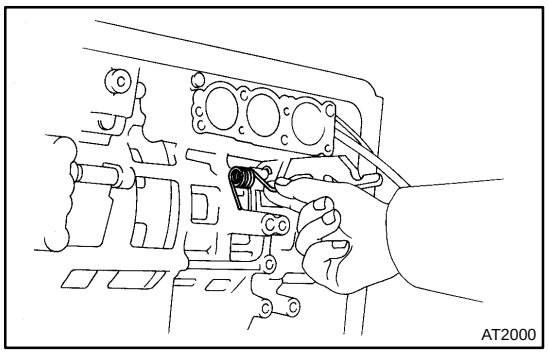

6. INSTALL SPRING TO PARKING LOCK PAWL SHAFT

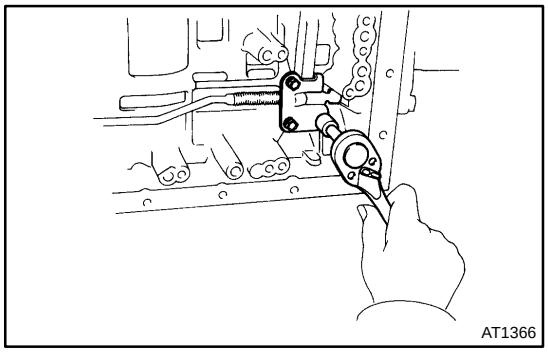

7. INSTALL PARKING LOCK PAWL BRACKET

Install the parking lock pawl bracket with the 3 bolts.

Torque: 7.4 N·m (75 kgf·cm, 65 in.·lbf)

HINT:

▲ Push the lock rod fully forward.

▲ Check that the parking lock pawl operates smoothly.

8. INSTALL VALVE BODY (See page AT–13)

AIR COOLED OIL COOLER (Towing Package Spec.)

AT10I–01

COMPONENTS

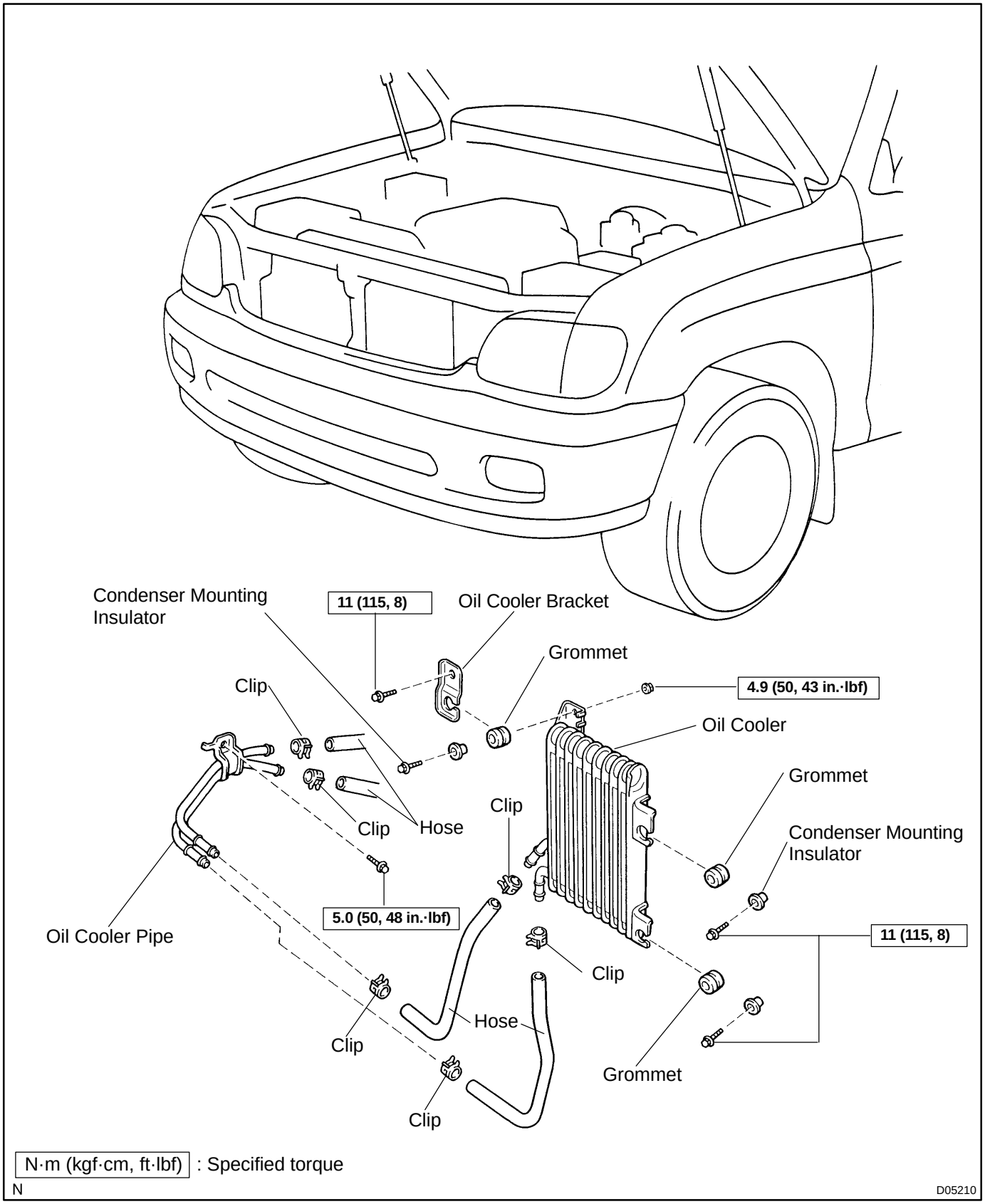

AT10J–01

REMOVAL

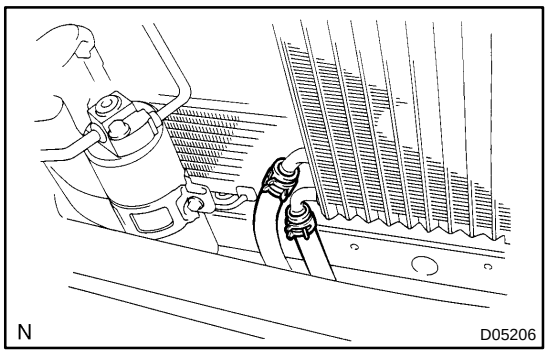

1. REMOVE PIPE

Loosen the 2 clips and disconnect the 2 hoses.

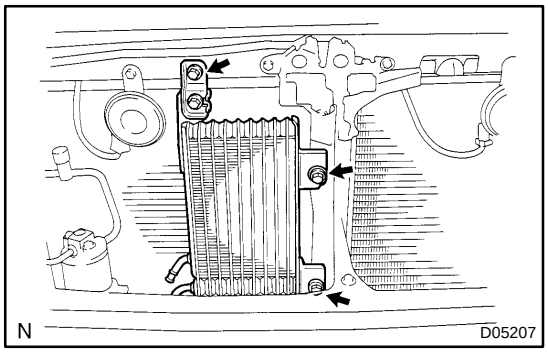

2. REMOVE OIL COOLER

(a) Remove the 3 bolts and oil cooler.
Torque: 11 N·m (115 kgf·cm, 8 ft·lbf)

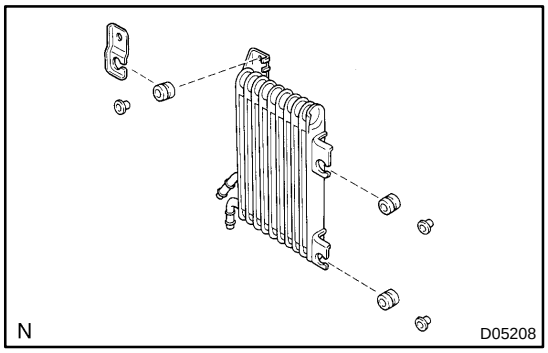

(b) Remove the bolt, transmission oil cooler bracket and grommet.
Torque: 4.9 N·m (50 kgf·cm, 43 in.·lbf)

(c) Remove the 2 grommets and condenser mounting insulators.

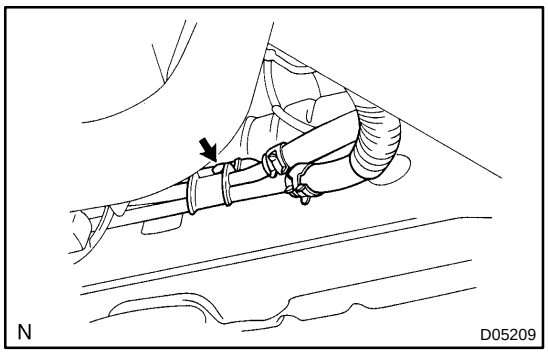

3. REMOVE OIL COOLER TUBE

(a) Loosen the 2 clips and disconnect the 2 hoses.
(b) Remove the bolt and oil cooler tube with the 2 hoses.
Torque: 5.0 N·m (50 kgf·cm, 48 in.·lbf)
(c) Loosen the 2 clips and disconnect the 2 hoses.

AT10K–01

INSTALLATION

Installation is in the reverse order of removal (See page AT–19).

HINT:

After installation, check fluid level (See page DI–384).

COLUMN SHIFT ASSEMBLY

COMPONENTS

AX04C–05

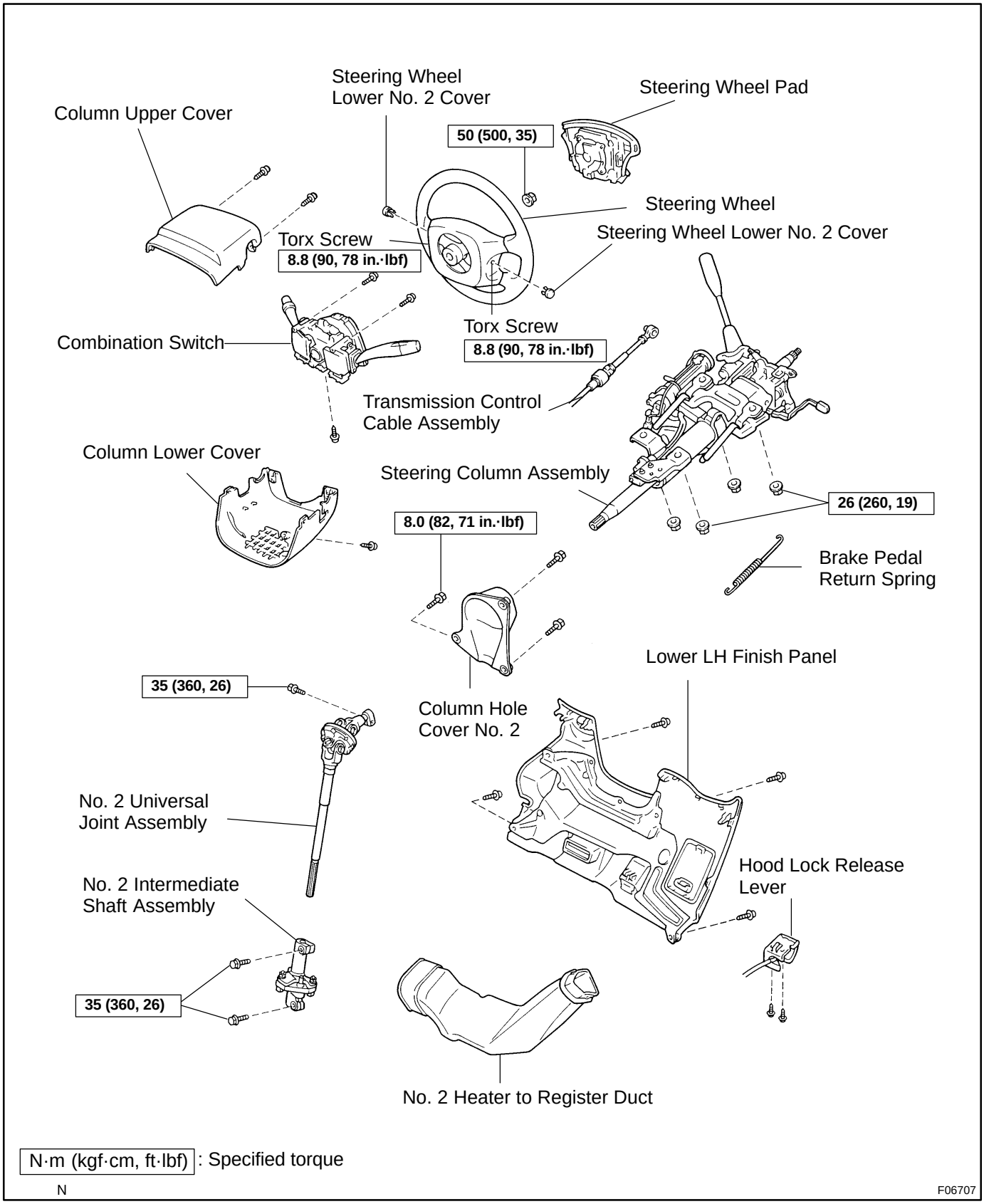

N·m (kgf·cm, ft·lbf) : Specified torque

N

F06707

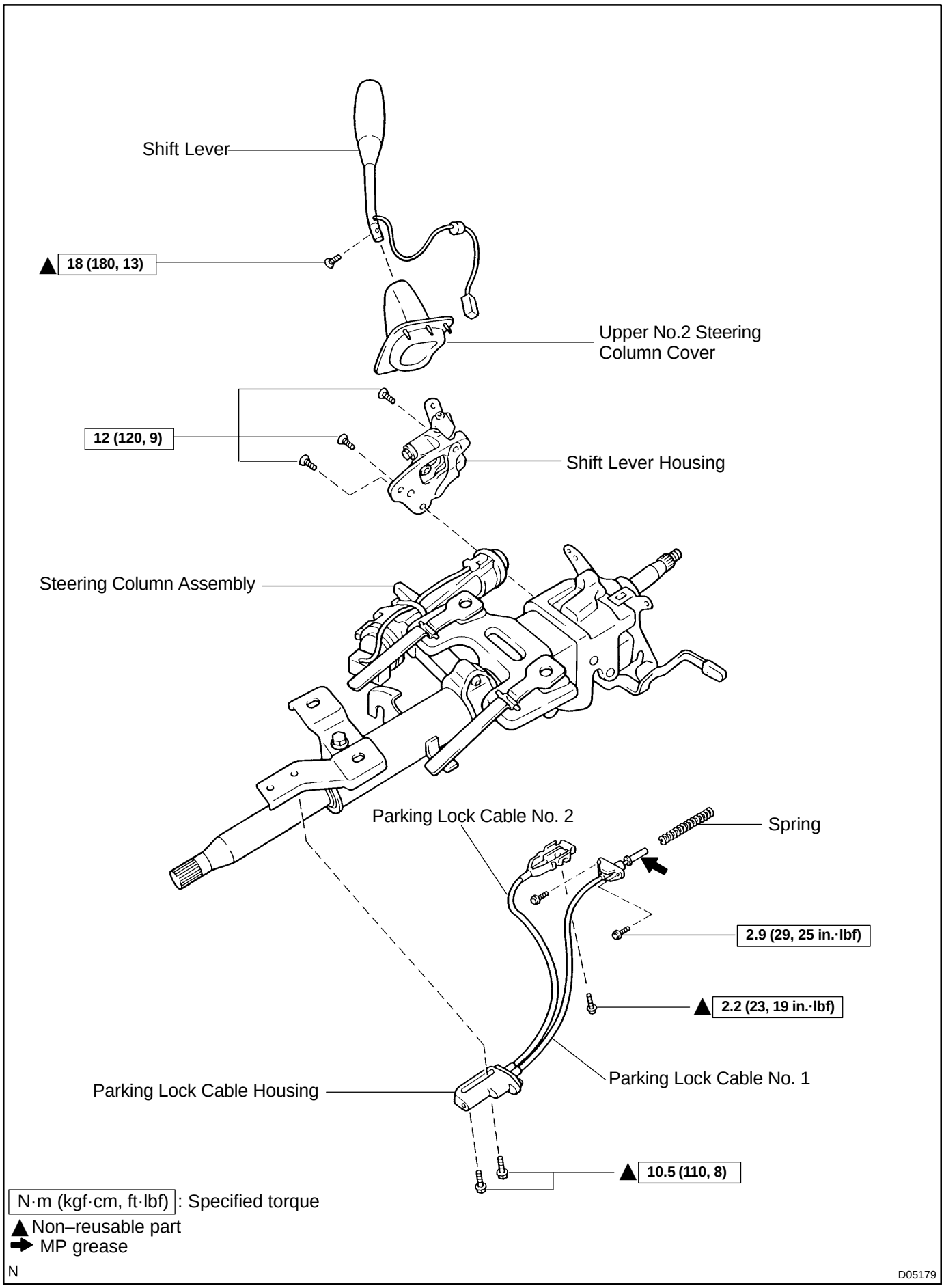
Shift Lever
▲ 18 (180, 13)
Upper No.2 Steering Column Cover
12 (120, 9)
Shift Lever Housing
Steering Column Assembly
Parking Lock Cable No. 2
Spring
2.9 (29, 25 in.·lbf)
▲ 2.2 (23, 19 in.·lbf)
Parking Lock Cable No. 1
Parking Lock Cable Housing
▲ 10.5 (110, 8)
N·m (kgf·cm, ft·lbf) : Specified torque
▲ Non–reusable part
➔ MP grease
N
D05179

AX04D–02

REMOVAL

1. REMOVE STEERING COLUMN ASSEMBLY
(See page SR–18)

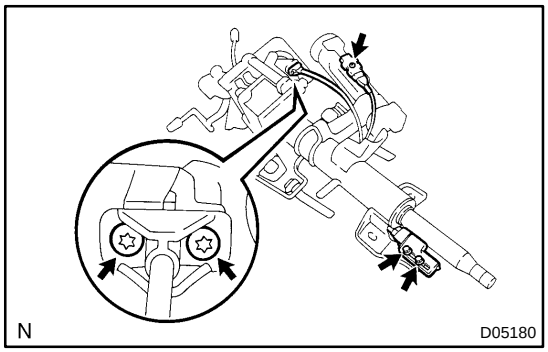

2. REMOVE PARKING LOCK CABLE ASSEMBLY

(a) Remove the screw and cable No. 2.
(b) Using a torx socket wrench, remove the 2 screws and cable No. 1.
(c) Remove the spring.
(d) Remove the 2 bolts and parking lock cable housing.

3. REMOVE SHIFT LEVER

(a) Disconnect the connector.
(b) Using a torx socket wrench, remove the torx screw and shift lever.
(c) Remove the upper No. 2 steering column cover.

4. REMOVE SHIFT LEVER HOUSING

Using a torx socket wrench, remove the 3 torx screws and shift lever housing.

AX04E–03

INSTALLATION

1. INSTALL SHIFT LEVER HOUSING

Using a torx socket wrench, install the shift lever housing with the 3 new screws.

Torque: 12 N·m (120 kgf·cm, 9 ft·lbf)

2. INSTALL SHIFT LEVER

(a) Install the upper No. 2 steering column cover.

(b) Using a torx socket wrench, install the shift lever with a new screw.

Torque: 18 N·m (180 kgf·cm, 13 ft·lbf)

(c) Connect the connector.

3. INSTALL PARKING LOCK CABLE NO. 1 AND NO. 2

(a) Apply MP grease on the lock pin and internal surface of shift lever housing.

(b) Install the spring and parking lock cable No. 1 into the shift lever housing.

NOTICE:

Be careful not to bend or twist the cable abnormally.

(c) Using a torx socket wrench, install 2 new screws.

Torque: 2.9 N·m (29 kgf·cm, 25 in.·lbf)

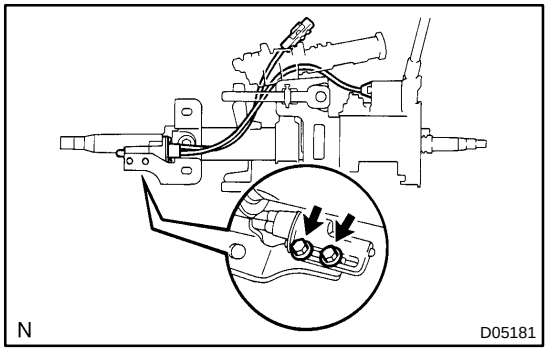

(d) Wire the cable No. 1 and No. 2, as shown in the illustration.

(e) Install the cable housing to steering column assembly with 2 new bolts temporarily.

NOTICE:

Be careful not to bend or twist the cable abnormally.

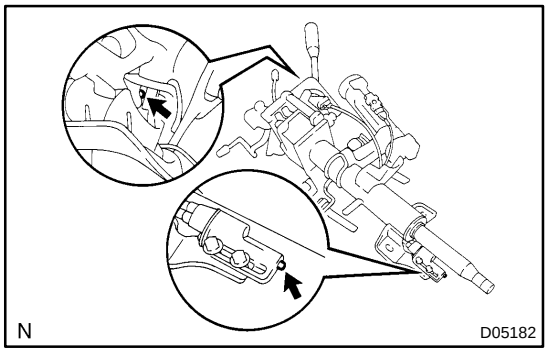

(f) After installation, confirm the following items.

(1) When the shift lever is at P position and the pedal button is pushed by 7 mm (0.28 in.), shift lever should be locked by lock pin.

(2) When the pedal button is released, the shift lever should be able to be shifted from P position to other positions.

(3) When the shift lever is at N or D position and the pedal button is pushed by 7 mm (0.28 in.), the shift lever should be able to be shifted.

(g) Install the cable No. 2 to column upper bracket with the clip.

(h) Install the cable end to the sliding block of the column upper bracket with the screw.

Torque: 2.2 N·m (23 kgf·cm, 19 in.·lbf)

(i) After installation, check the following items.

(1) When the pedal button is pushed, shift lever should be locked.

(2) When the pedal button is released, shift lever should be unlocked.

4. INSTALL STEERING COLUMN ASSEMBLY

(See page SR–28)

5. ADJUST CABLE HOUSING

(a) Shift the shift lever to the P position.

(b) Turn the ignition key to LOCK.

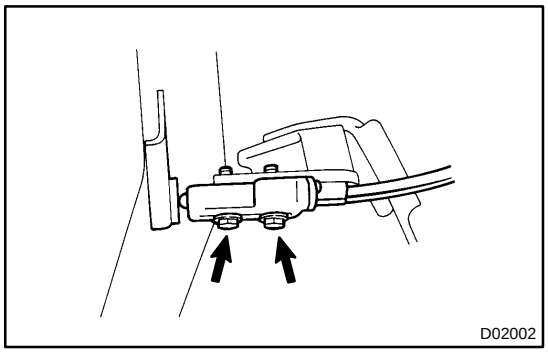

(c) Loosen the 2 bolts and adjust the cable housing.

HINT:

▲ Pedal button should touch the pedal plate cushion.

▲ Brake pedal should not be moved by the pedal button.

▲ Cable housing should not be toughed the brake pedal and the brake pedal plate cushion.

(d) Torque the 2 bolts.

Torque: 10.5 N·m (110 kgf·cm, 8 ft·lbf)

6. CONFIRM SHIFT LOCK SYSTEM OPERATION

(a) Only when the brake pedal is engaged and the ignition key is not at LOCK, should the shift lever be able to be shifted from P position to other positions.

When the shift lever is at P position and the brake pedal is released, the shift lever should not be able to be shifted from P position to other positions.

(b) When the shift lever is not at P position, the ignition key should not be able to be turned to LOCK.

Once when the shift lever is at P position, should the ignition key be able to be removed.

(c) Cable No. 1 and No. 2 should not be deformed by other parts located around the steering column.

AUTOMATIC TRANSMISSION UNIT (5VZ–FE)

AT0JW–03

COMPONENTS

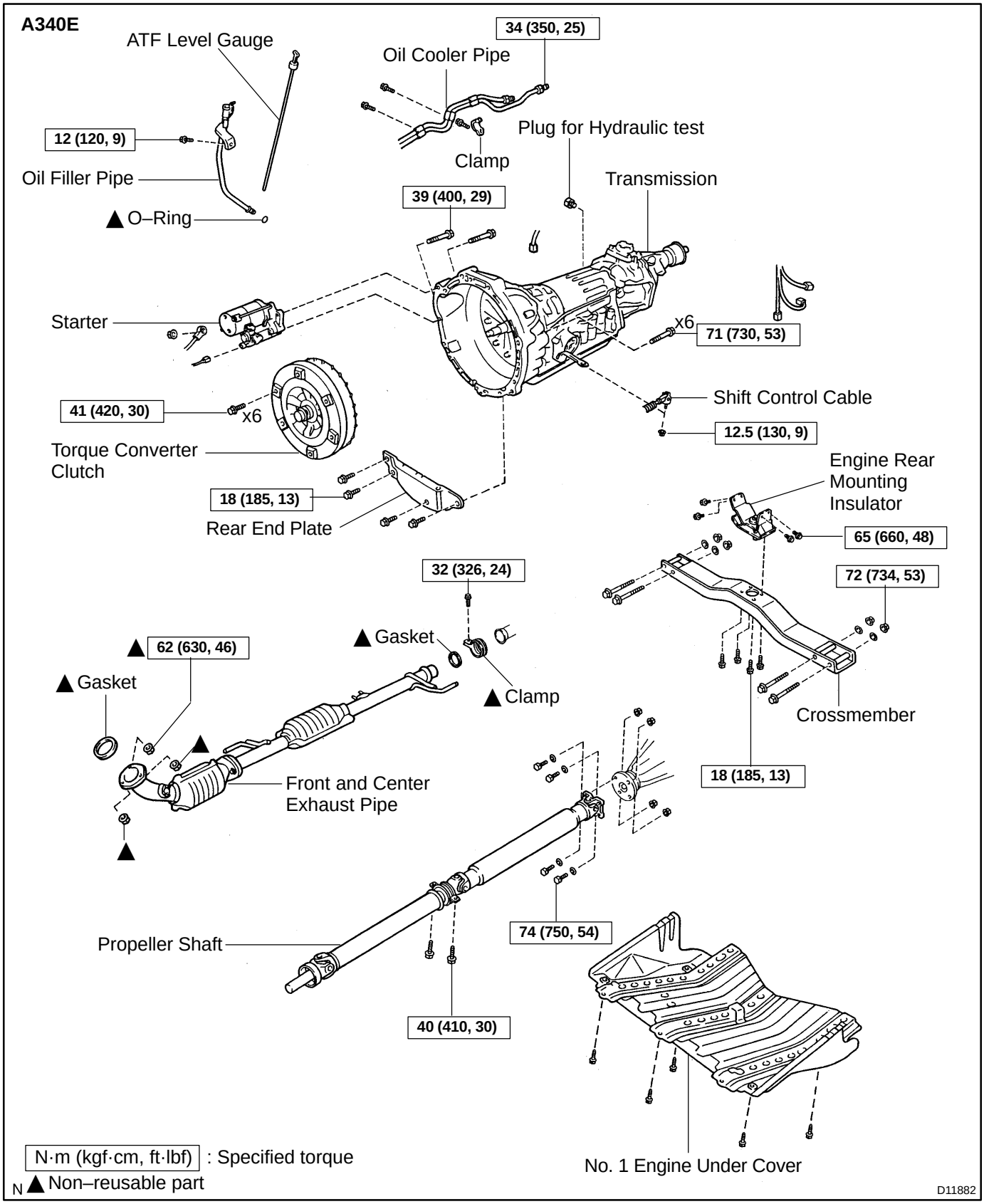

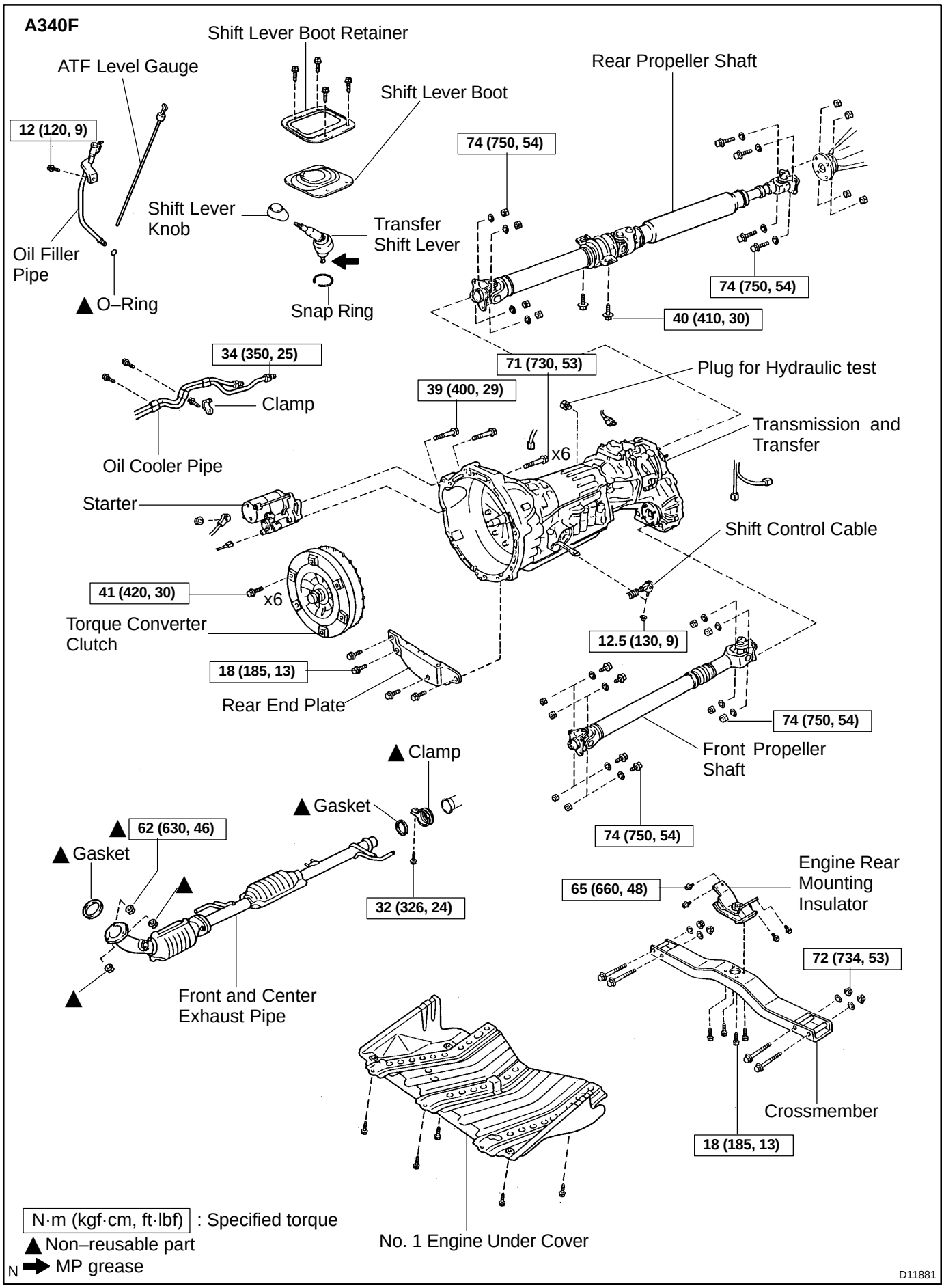
A340F
Shift Lever Boot Retainer
ATF Level Gauge
Shift Lever Boot
Rear Propeller Shaft
12 (120, 9)
74 (750, 54)
Shift Lever Knob
Transfer Shift Lever
Oil Filler Pipe
▲ O–Ring
Snap Ring
74 (750, 54)
40 (410, 30)
34 (350, 25)
71 (730, 53)
Plug for Hydraulic test
39 (400, 29)
Clamp
Transmission and Transfer
x6
Oil Cooler Pipe
Starter
Shift Control Cable
41 (420, 30)
x6
Torque Converter Clutch
12.5 (130, 9)
18 (185, 13)
Rear End Plate
74 (750, 54)
Front Propeller Shaft
▲ Clamp
▲ Gasket
74 (750, 54)
▲ 62 (630, 46)
▲ Gasket
Engine Rear Mounting Insulator
65 (660, 48)
32 (326, 24)
72 (734, 53)
Front and Center Exhaust Pipe
Crossmember
18 (185, 13)
No. 1 Engine Under Cover
N·m (kgf·cm, ft·lbf) : Specified torque
▲ Non–reusable part
N ➡ MP grease
D11881

AT10L–01

REMOVAL

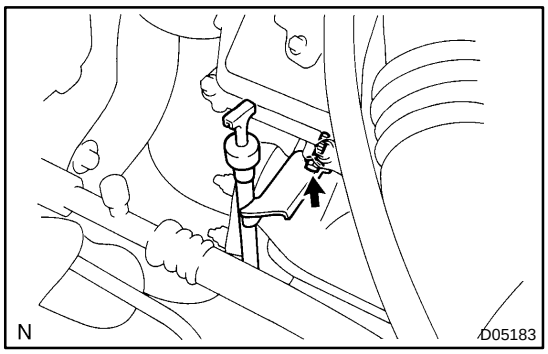

1. REMOVE OIL FILLER PIPE

(a) Remove the ATF level gauge.

(b) Remove the bolt and oil filler pipe with the O–ring.

HINT:

At the time of installation, please refer to the following item.

Replace used O–ring with a new one.

2. A340F:
REMOVE TRANSFER SHIFT LEVER

(a) Remove the shift lever knob.

(b) Remove the 4 screws, shift lever boot retainer and shift lever boot.

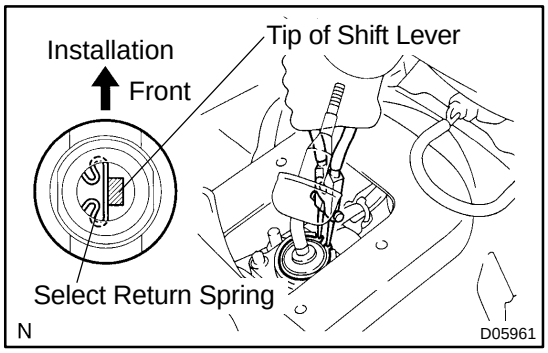

(c) Using snap ring pliers, remove the snap ring and pull out the transfer shift lever.

HINT:

▲ Shift the transfer shift lever to the ”H4” position.

▲ At the time of installation, please refer to the following item.

Apply MP grease to the tip of the transfer shift lever.

3. JACK UP VEHICLE

4. REMOVE NO. 1 ENGINE UNDER COVER

5. REMOVE FRONT AND CENTER EXHAUST PIPE (See page EM–103)

6. A340E:
REMOVE PROPELLER SHAFT (See page PR–3)

7. A340F:
REMOVE FRONT AND REAR PROPELLER SHAFT (See page PR–10)

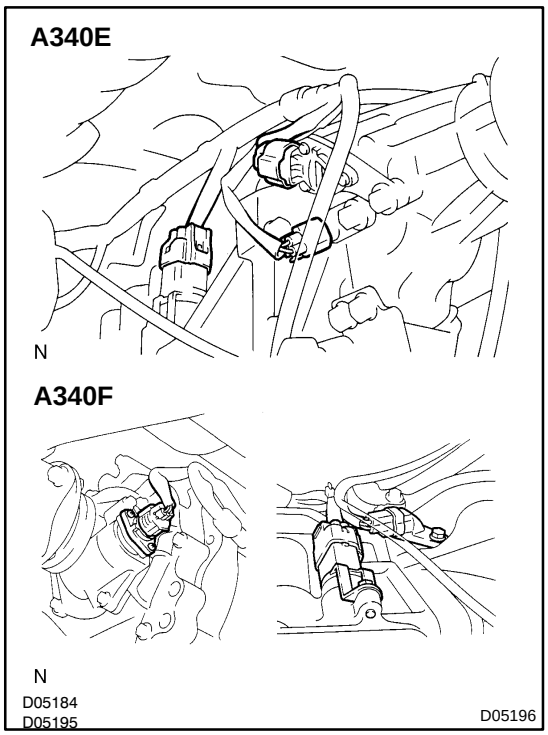

8. DISCONNECT NO. 1 VEHICLE SPEED SENSOR CONNECTOR

9. DISCONNECT NO. 2 VEHICLE SPEED SENSOR CONNECTOR

10. DISCONNECT SOLENOID CONNECTOR

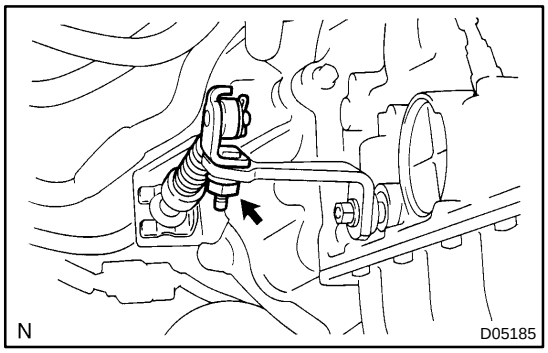

11. DISCONNECT SHIFT CONTROL CABLE

Remove the nut and disconnect the shift control cable.

Torque: 12.5 N·m (130 kgf·cm, 9 ft·lbf)

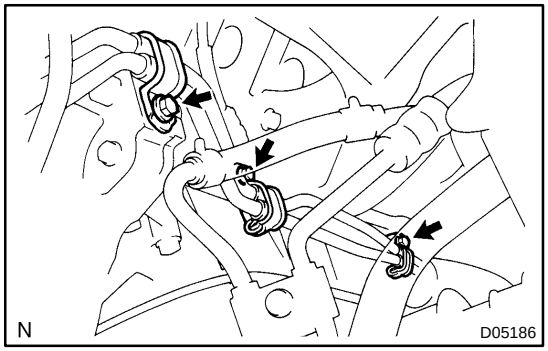

12. DISCONNECT OIL COOLER PIPE

(a) Remove the 3 bolts and clamps.

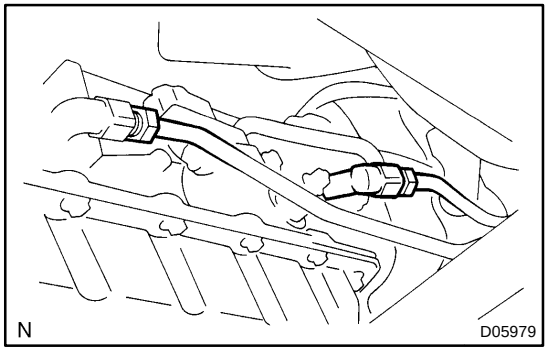

(b) Disconnect the 2 oil cooler pipes.

Torque: 34 N·m (350 kgf·cm, 25 ft·lbf)

13. DISCONNECT ATF TEMPERATURE SENSOR CONNECTOR

14. DISCONNECT PARK/NEUTRAL POSITION SWITCH CONNECTOR

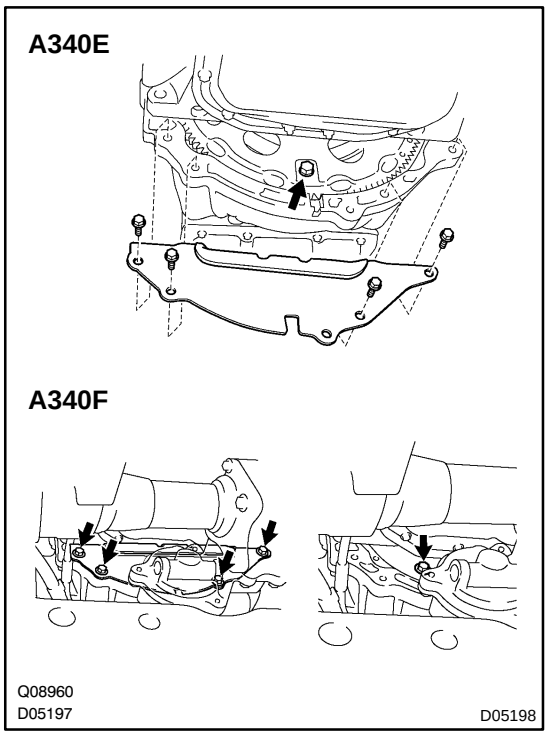

15. REMOVE REAR END PLATE AND TORQUE CONVERTER CLUTCH MOUNTING BOLT

(a) Remove the 4 bolts and rear end plate.
Torque: 18 N·m (185 kgf·cm, 13 ft·lbf)

(b) Turn the crankshaft to gain access and remove the 6 bolts while holding the crankshaft pulley set bolt with a wrench.
Torque: 41 N·m (420 kgf·cm, 30 ft·lbf)

HINT:
At the time of installation, please refer to the following item.
First install the green colored bolt and then 5 other bolts.

16. JACK UP TRANSMISSION SLIGHTLY

Securely support the transmission on a transmission jack.
Lift the transmission slightly from the crossmember.

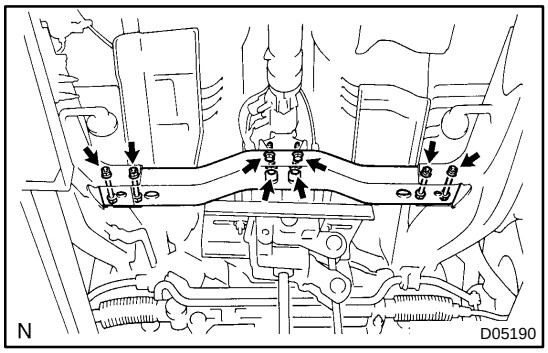

17. REMOVE CROSSMEMBER

(a) Remove the 4 bolts on the rear mounting side from the engine rear mounting insulator.
Torque: 18 N·m (185 kgf·cm, 13 ft·lbf)

(b) Remove the 4 nuts, bolts, washers and crossmember.
Torque: 72 N·m (734 kgf·cm, 53 ft·lbf)

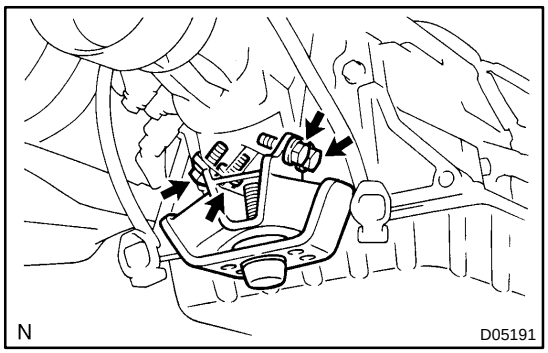

18. REMOVE ENGINE REAR MOUNTING INSULATOR

Remove the 4 bolts and engine rear mounting insulator from the transmission.
Torque: 65 N·m (660 kgf·cm, 48 ft·lbf)

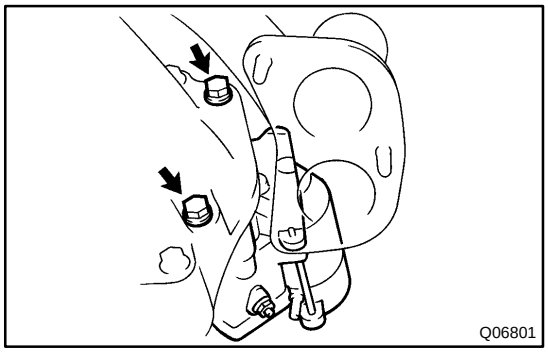

19. REMOVE STARTER

(a) Remove the nut and disconnect the starter wire and connector.

(b) Remove the 2 bolts and starter.
Torque: 39 N·m (400 kgf·cm, 29 ft·lbf)

20. REMOVE TRANSMISSION

(a) A340E:
Separate the wire harness from the transmission.

(b) A340F:
Separate the wire harness from the transmission and transfer.

(c) Lower the rear end of the transmission.

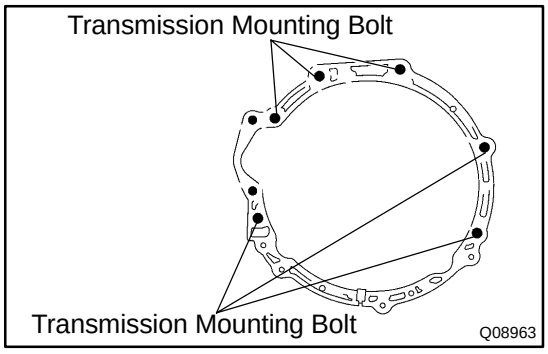

(d) Remove the 6 bolts and transmission.
Torque: 71 N·m (730 kgf·cm, 53 ft·lbf)

AT016–07

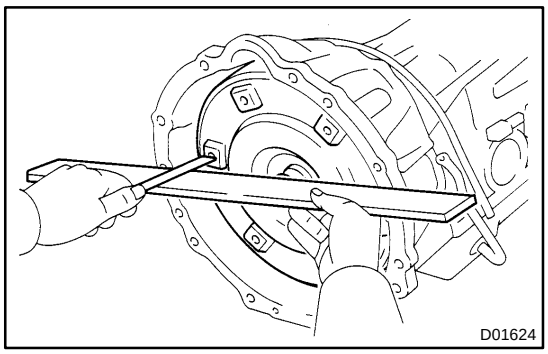

INSTALLATION

1. CHECK TORQUE CONVERTER CLUTCH INSTALLATION

Using calipers and a straight edge, measure the distance from the installed surface of the transmission housing to the installed surface of the torque converter clutch.

Correct distance: More than 17.95 mm (0.7067 in.)

2. INSTALL TRANSMISSION

Installation is in the reverse order of removal (See page AT–28).

HINT:

- ▲ After installation, adjust the shift lever position (See page DI–384).
- ▲ Fill ATF and check the fluid level (See page DI–384).
- ▲ Conduct the road test of the vehicle (See page DI–384).

AUTOMATIC TRANSMISSION UNIT (2UZ–FE)

AT10M–01

COMPONENTS

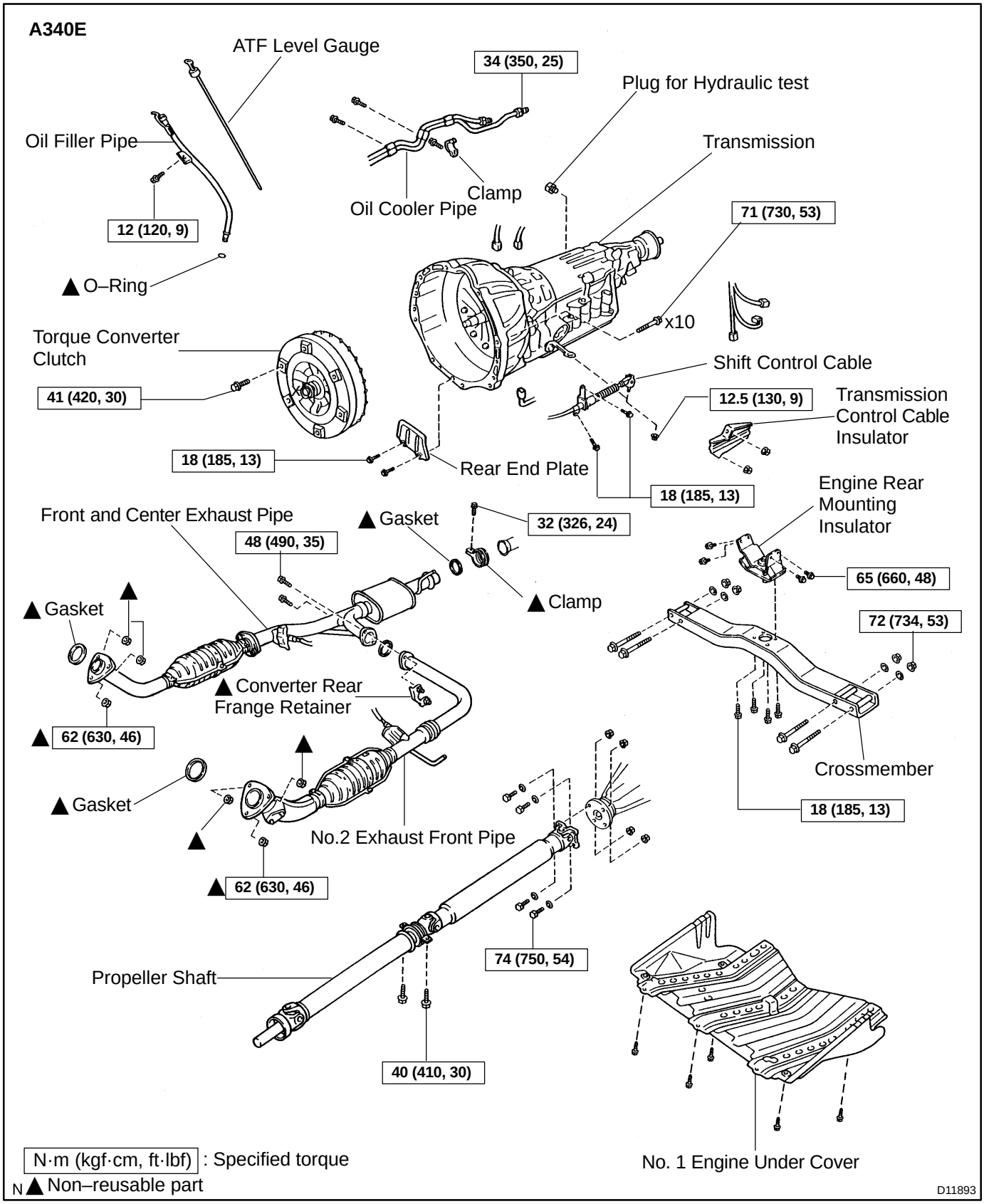

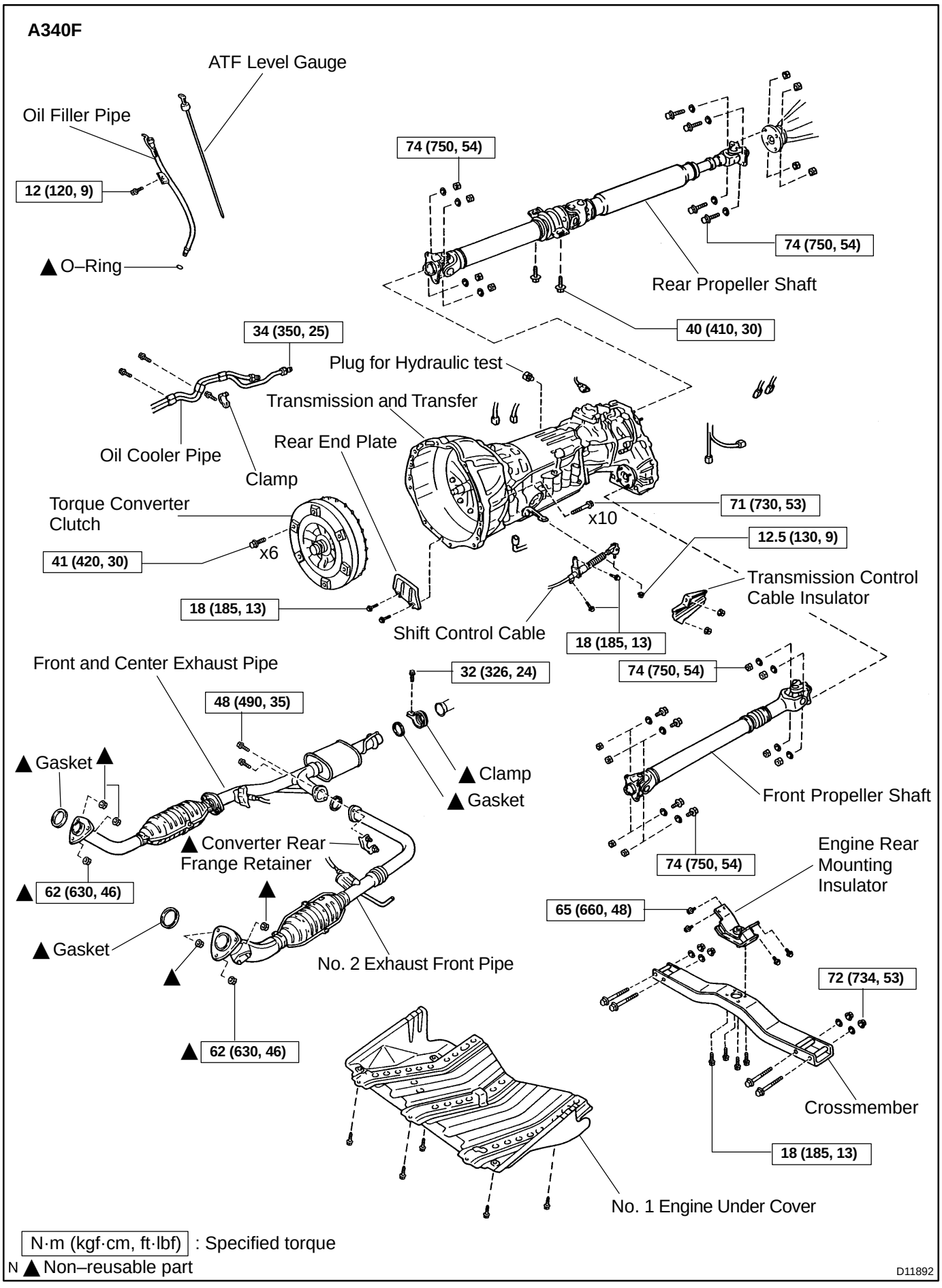
A340F
ATF Level Gauge
Oil Filler Pipe
12 (120, 9)
▲ O–Ring
74 (750, 54)
74 (750, 54)
Rear Propeller Shaft
40 (410, 30)
34 (350, 25)
Plug for Hydraulic test
Transmission and Transfer
Rear End Plate
Oil Cooler Pipe
Clamp
Torque Converter Clutch
41 (420, 30)
x6
18 (185, 13)
x10
71 (730, 53)
12.5 (130, 9)
Transmission Control Cable Insulator
Shift Control Cable
18 (185, 13)
Front and Center Exhaust Pipe
32 (326, 24)
48 (490, 35)
▲ Gasket
▲ Clamp
▲ Gasket
▲ Converter Rear Frange Retainer
▲ 62 (630, 46)
▲ Gasket
No. 2 Exhaust Front Pipe
▲ 62 (630, 46)
74 (750, 54)
Front Propeller Shaft
74 (750, 54)
Engine Rear Mounting Insulator
65 (660, 48)
72 (734, 53)
Crossmember
18 (185, 13)
No. 1 Engine Under Cover
N·m (kgf·cm, ft·lbf) : Specified torque
N ▲ Non–reusable part
D11892

AT0JV–04

REMOVAL

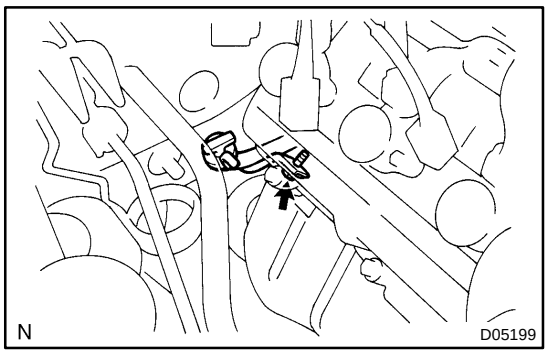

1. REMOVE OIL FILLER PIPE

(a) Remove the ATF level gauge.

(b) Remove the bolt and oil filler pipe with the O–ring.

HINT:

At the time of installation, please refer to the following item.

Replace used O–ring with a new one.

2. JACK UP VEHICLE

3. REMOVE NO. 1 ENGINE UNDER COVER

4. REMOVE FRONT AND CENTER EXHAUST PIPE AND NO. 2 EXHAUST FRONT PIPE (See page EM–117)

5. A340E:
REMOVE PROPELLER SHAFT (See page PR–3)

6. A340F:
REMOVE FRONT AND REAR PROPELLER SHAFT (See page PR–10)

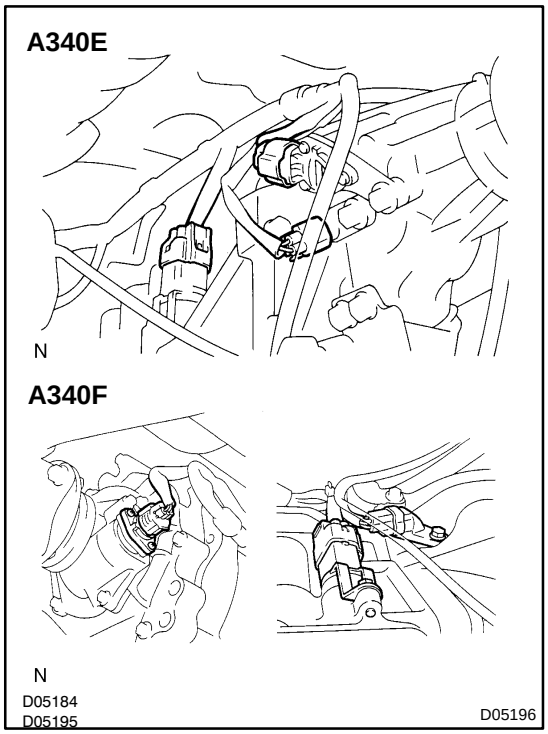

7. DISCONNECT NO. 1 VEHICLE SPEED SENSOR CONNECTOR

8. DISCONNECT NO. 2 VEHICLE SPEED SENSOR CONNECTOR

9. DISCONNECT SOLENOID CONNECTOR

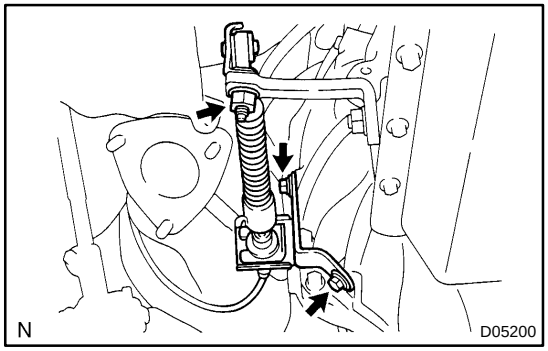

10. SEPARATE SHIFT CONTROL CABLE FROM TRANSMISSION

(a) Remove the 2 nuts and transmission control cable insulator.

(b) Remove the nut and disconnect the shift control cable.
Torque: 12.5 N·m (130 kgf·cm, 9 ft·lbf)

(c) Remove the 2 bolts and shift control cable bracket from the transmission.
Torque: 18 N·m (185 kgf·cm, 13 ft·lbf)

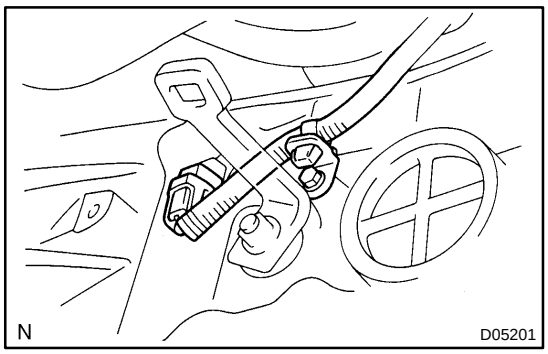

11. DISCONNECT O/D DIRECT CLUTCH SPEED SENSOR CONNECTOR

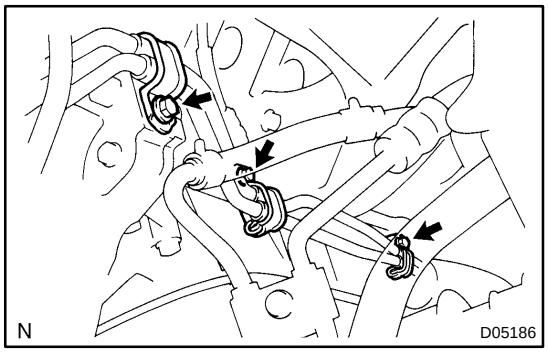

12. DISCONNECT OIL COOLER PIPE

(a) Remove the 3 bolts and clamp.

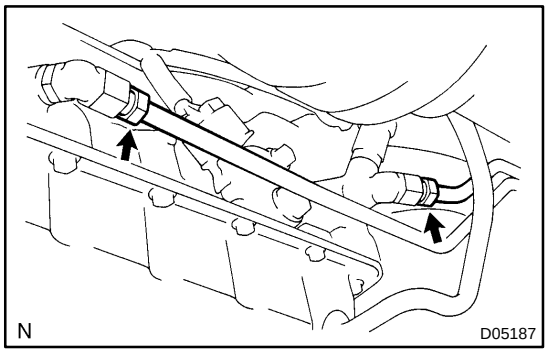

(b) Disconnect the 2 oil cooler pipes.
Torque: 34 N·m (350 kgf·cm, 25 ft·lbf)

13. DISCONNECT ATF TEMPERATURE SENSOR CONNECTOR

14. DISCONNECT PARK/NEUTRAL POSITION SWITCH CONNECTOR

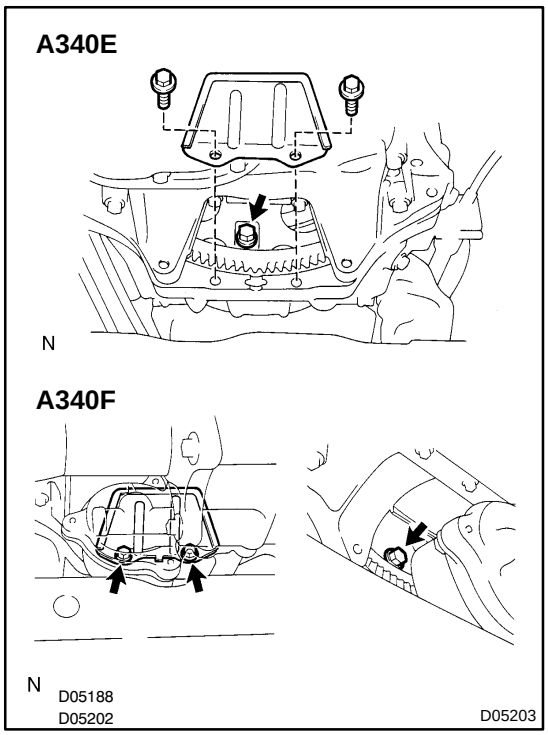

15. REMOVE REAR END PLATE AND TORQUE CONVERTER CLUTCH MOUNTING BOLT

(a) Remove the 2 bolts and rear end plate.
Torque: 18 N·m (185 kgf·cm, 13 ft·lbf)

(b) Turn the crankshaft to gain access and remove the 6 bolts while holding the crankshaft pulley set bolt with a wrench.
Torque: 41 N·m (420 kgf·cm, 30 ft·lbf)

HINT:

At the time of installation, please refer to the following item.
First install the green colored bolt and then 5 other bolts.

16. JACK UP TRANSMISSION SLIGHTLY

Securely support the transmission on a transmission jack.
Lift the transmission slightly from the crossmember.

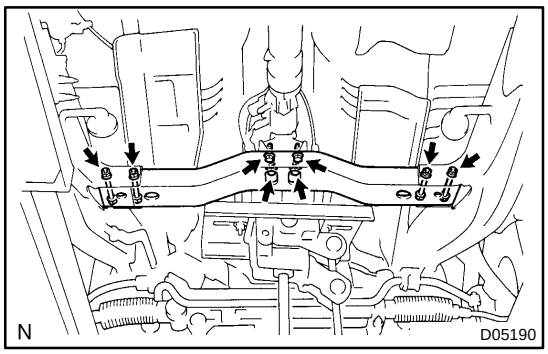

17. REMOVE CROSSMEMBER

(a) Remove the 4 bolts on the rear mounting side from the engine rear mounting insulator.
Torque: 18 N·m (185 kgf·cm, 13 ft·lbf)

(b) Remove the 4 nuts, bolts, washers and crossmember.
Torque: 72 N·m (734 kgf·cm, 53 ft·lbf)

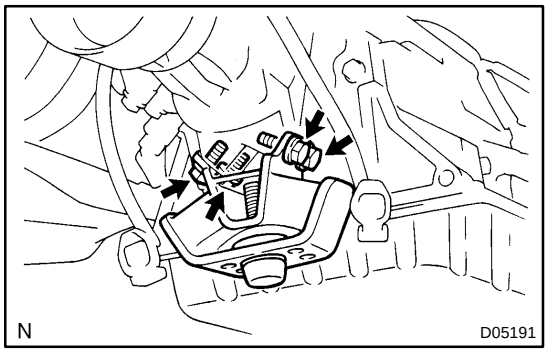

18. REMOVE ENGINE REAR MOUNTING INSULATOR

Remove the 4 bolts and engine rear mounting insulator from the transmission.
Torque: 65 N·m (660 kgf·cm, 48 ft·lbf)

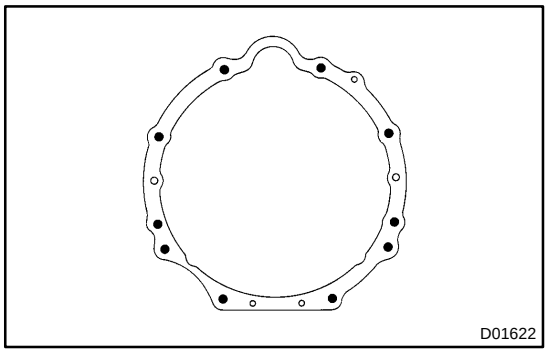

19. REMOVE TRANSMISSION

(a) A340E:
Separate the wire harness from the transmission.

(b) A340F:
Separate the wire harness from the transmission and transfer.

(c) Lower the rear end of the transmission.

(d) Remove the 10 bolts and transmission.
Torque: 71 N·m (730 kgf·cm, 53 ft·lbf)

AT082–04

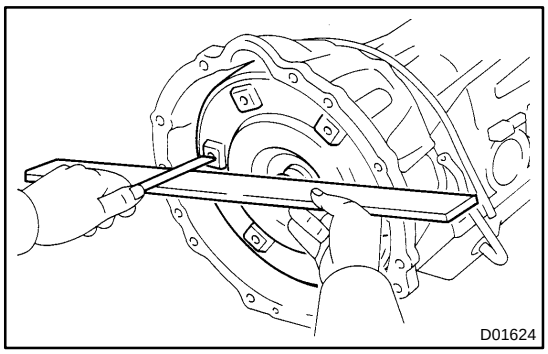

INSTALLATION

1. CHECK TORQUE CONVERTER CLUTCH INSTALLATION

Using calipers and a straight edge, measure the distance from the installed surface of the transmission housing to the installed surface of the torque converter clutch.

Correct distance: More than 17.1 mm (0.673 in.)

2. TRANSMISSION INSTALLATION

Installation is in the reverse order of removal (See page AT–35).

HINT:

- ▲ After installation, adjust the shift lever position (See page DI–384).
- ▲ Fill ATF and check the fluid level (See page DI–384).
- ▲ Conduct the road test of the vehicle (See page DI–384).

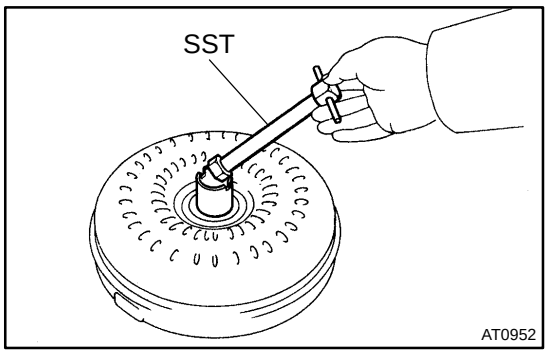

TORQUE CONVERTER CLUTCH AND DRIVE PLATE

AT0JY–03

INSPECTION

1. INSPECT ONE–WAY CLUTCH

(a) Install SST in the inner race of one–way clutch.
SST 09350–30020 (09351–32010)

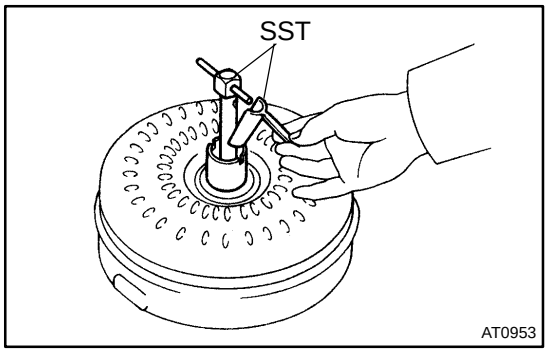

(b) Install SST so that it fits in the notch of the converter hub and outer race of the one–way clutch.
SST 09350–30020 (09351–32020)

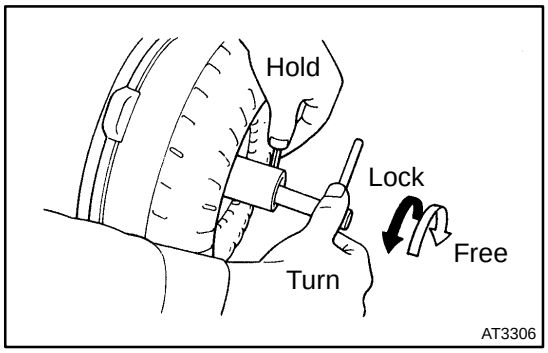

(c) With the torque converter clutch standing on its side, check that the clutch locks when turned counterclockwise, and rotates freely and smoothly clockwise.

If necessary, clean the converter and retest the clutch.
Replace the converter if the clutch still fails the test.

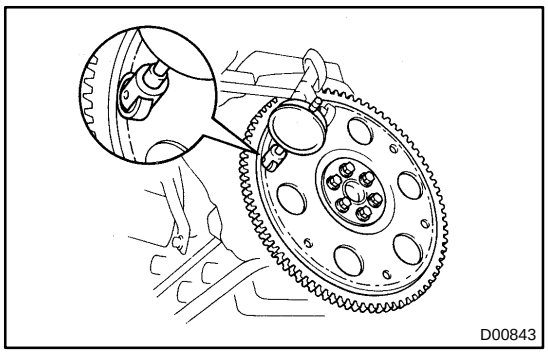

2. MEASURE DRIVE PLATE RUNOUT AND INSPECT RING GEAR

Set up a dial indicator, measure the drive plate runout.

Maximum runout: 0.20 mm (0.0079 in.)

If runout is not within the specification or if the ring gear is damaged, replace the drive plate.

If installing a new drive plate, note the orientation of spacers and tighten the bolts.

Torque: 83 N·m (850 kgf·cm, 61 ft·lbf)

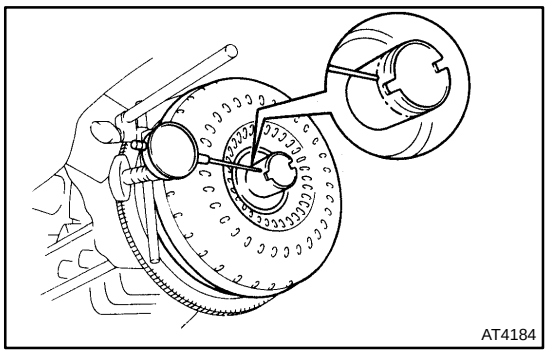

3. MEASURE TORQUE CONVERTER CLUTCH SLEEVE RUNOUT

Temporarily mount the torque converter clutch to the drive plate.

Set up a dial indicator, measure the torque corverter clutch sleeve runout.

Maximum runout: 0.30 mm (0.0118 in.)

If runout is not within the specification, try to correct by reorienting the installation of the converter clutch.

HINT:

Mark the position of the torque converter clutch to ensure the correct installation.

CLIP

BO0HX–01

REPLACEMENT

The removal and installation methods of typical clips used in body parts are shown in the table below.
HINT:
If the clip is damaged during the operation, always replace it with a new clip.

Shape (Example)	Removal/Installation
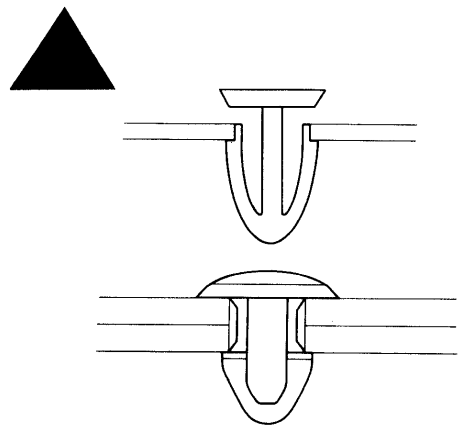	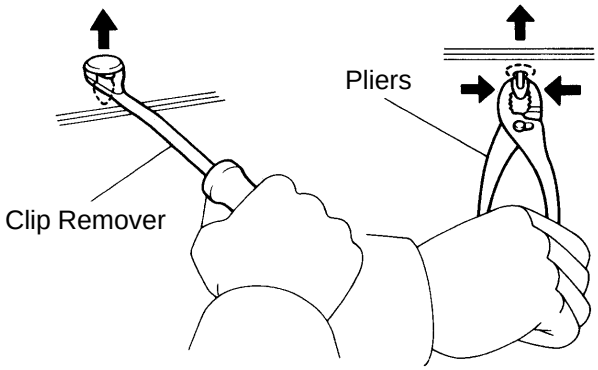
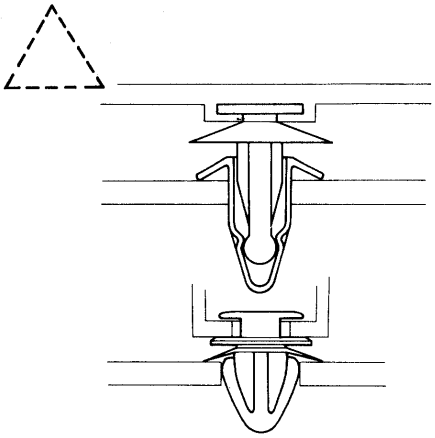	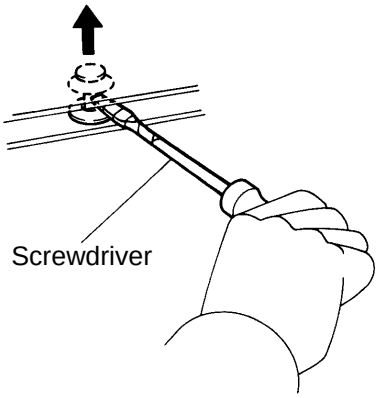
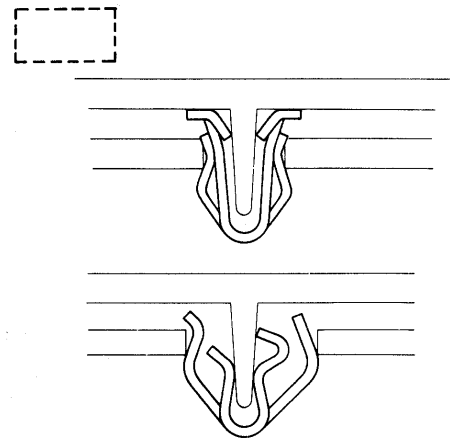	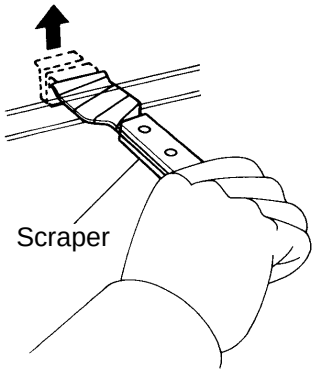

V00005

Shape (Example)	Removal/Installation
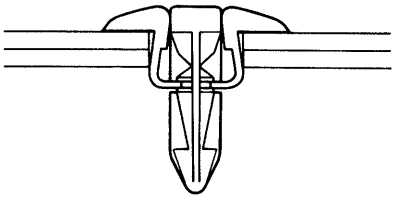	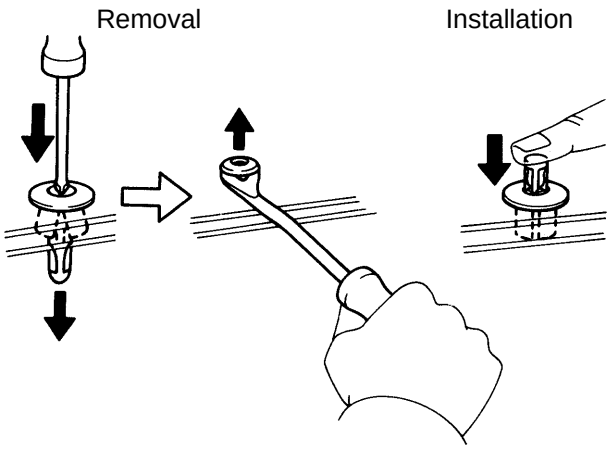
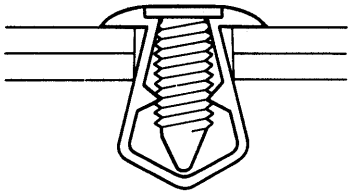	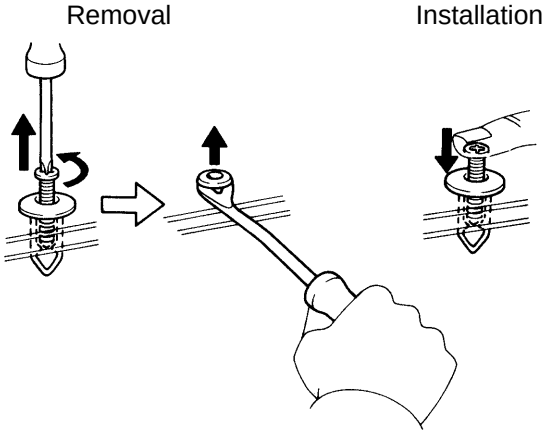

V00012

SRS AIRBAG

BO0HY–03

PRECAUTION

The TOYOTA TUNDRA is equipped with an SRS (Supplemental Restraint System) such as the driver airbag and front passenger airbag. Failure to carry out service operation in the correct sequence could cause the SRS to unexpectedly deploy during servicing, possibly leading to a serious accident. Before servicing (including removal or installation of parts, inspection or replacement), be sure to read the precautionary notices in the RS section.

FRONT BUMPER

COMPONENTS

BO4H1–01

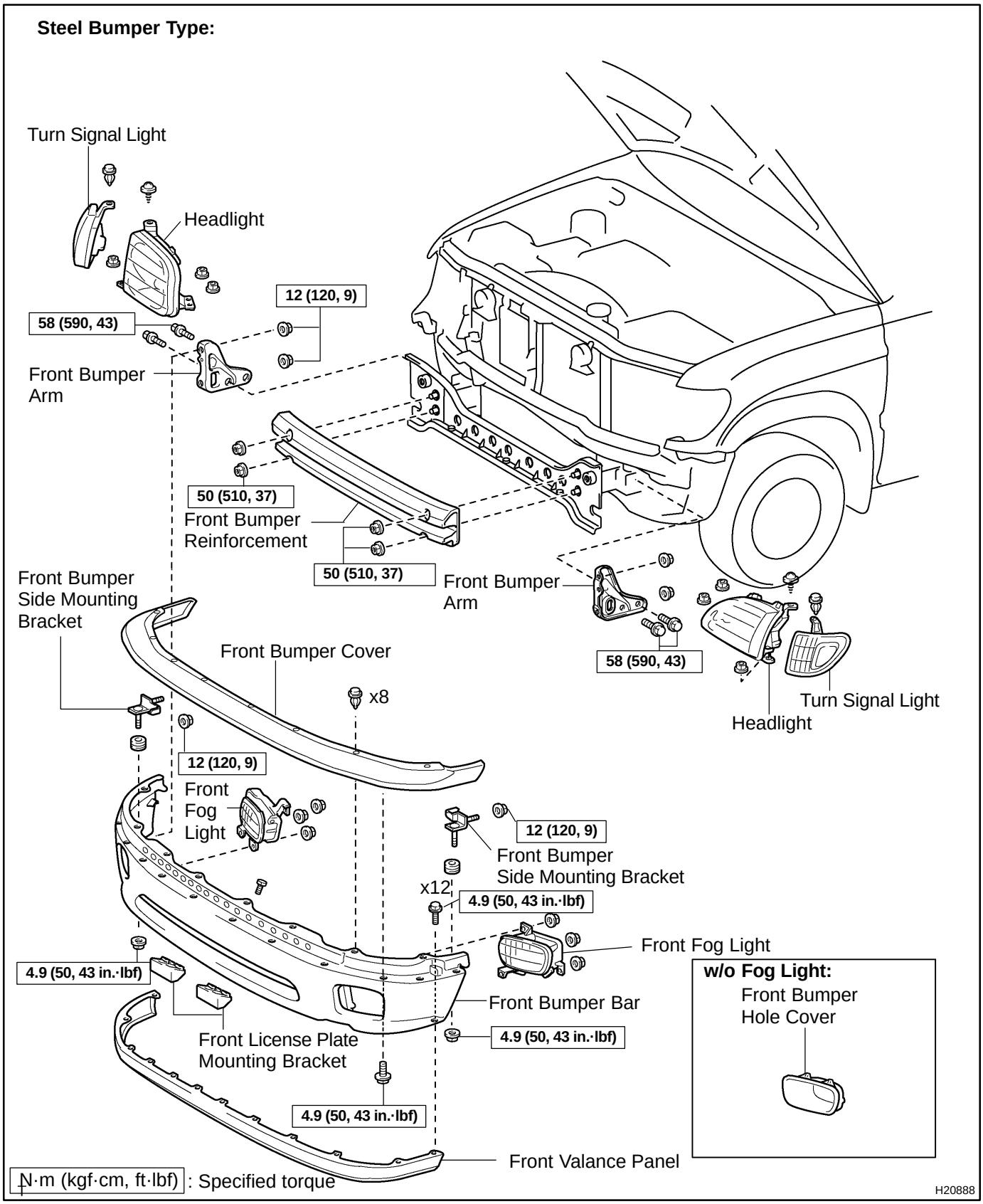

Resin Bumper Type:

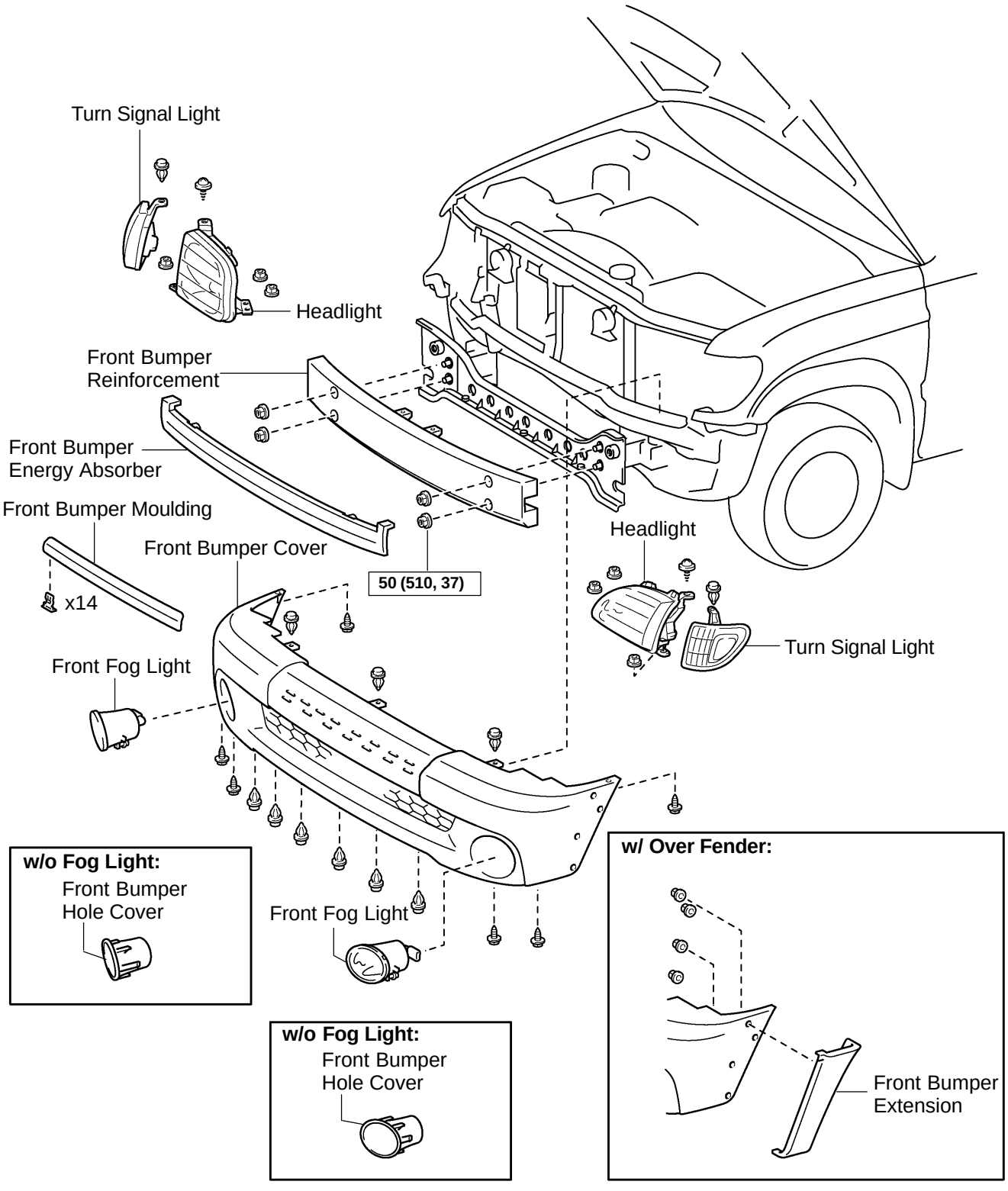

T N·m (kgf·cm, ft·lbf) : Specified torque

H20689

REAR BUMPER

COMPONENTS

BO2EJ–02

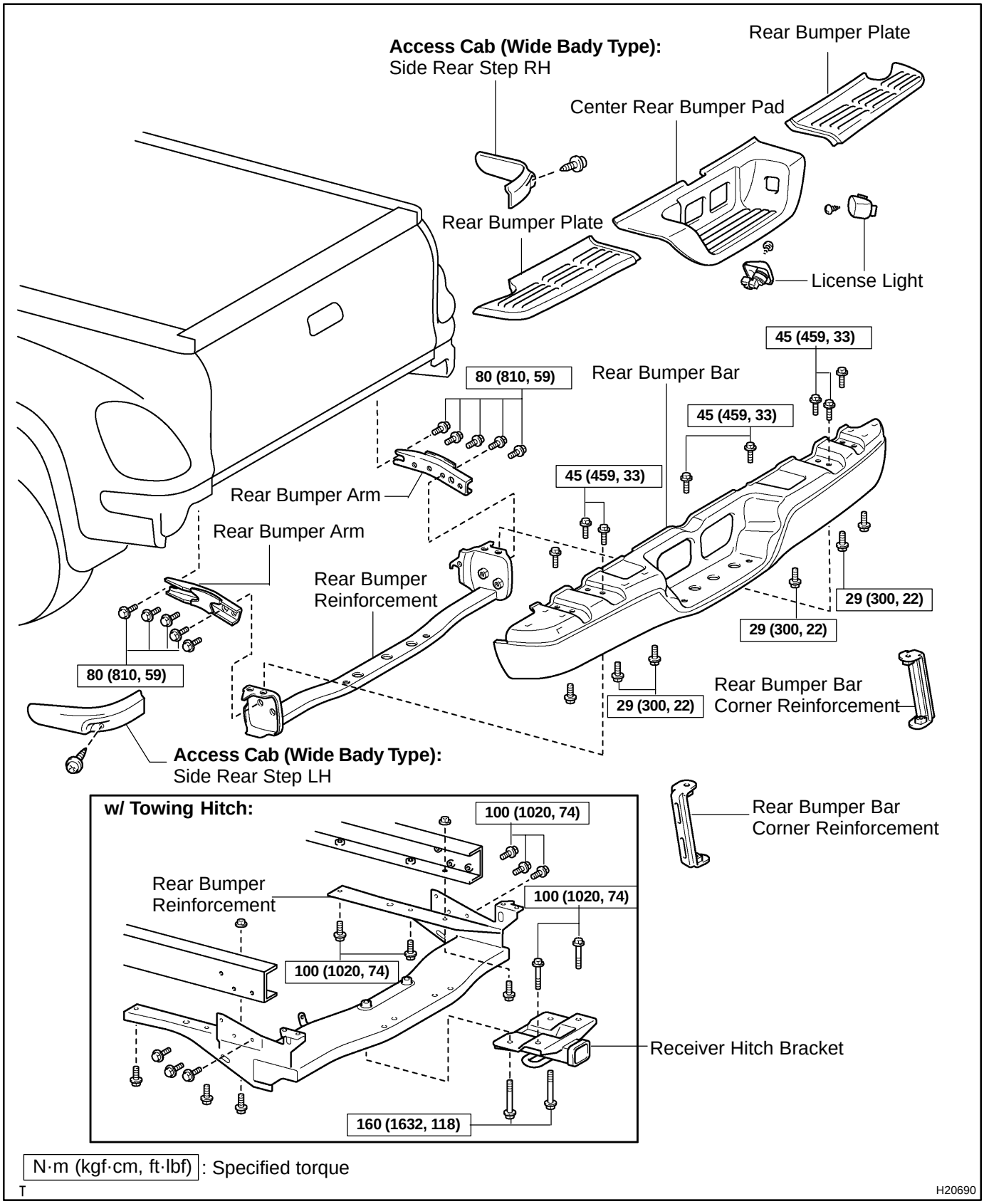

HOOD

ADJUSTMENT

BO0I1–02

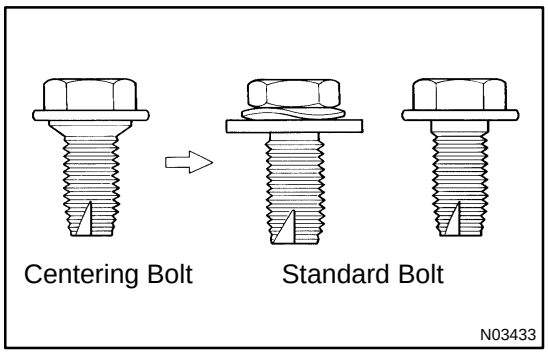

HINT:

Since the centering bolt is used as the hood hinge set bolt, the hood cannot be adjusted with it on. Substitute the standard bolt for the centering bolt.

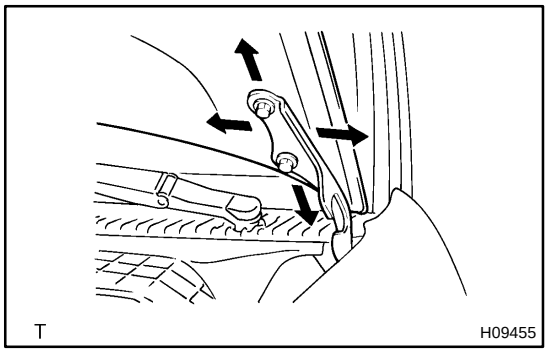

1. ADJUST HOOD IN FORWARD/REARWARD

Adjust the hood by loosening the hood side hinge bolts.

Torque: 13 N·m (133 kgf·cm, 10 ft·lbf)

2. ADJUST HOOD IN VERTICAL DIRECTIONS

(a) Remove the bolts and increase or decrease the number of washers between the hinge and hood.

(b) Install the bolts again.

Torque: 13 N·m (133 kgf·cm, 10 ft·lbf)

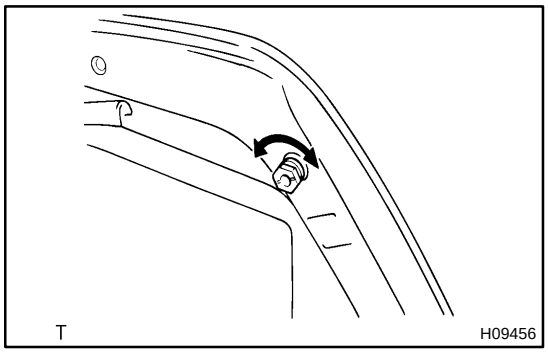

3. ADJUST FRONT EDGE OF HOOD IN VERTICAL DIRECTION

Adjust the hood by turning the cushions.

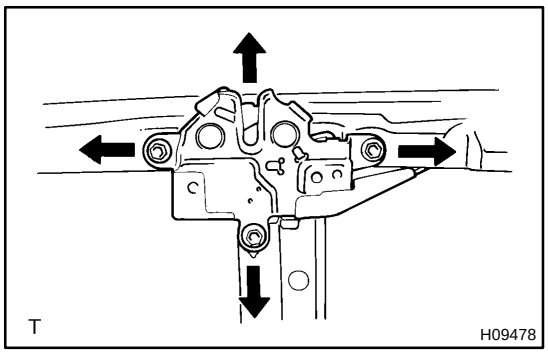

4. ADJUST HOOD LOCK

Adjust the lock by loosening the bolts.

Torque: 7.8 N·m (80 kgf·cm, 69 in.·lbf)

HOOD SUPPORT

BO2EK–01

REPLACEMENT

1. REMOVE HOOD SUPPORT

(a) Remove the bolt and hood support from the hood.

HINT:

While supporting the hood by hand, remove the hood support from the hood.

(b) Remove the bolt and hood support.

2. IF NECESSARY, REPLACE HOOD SUPPORT

NOTICE:

Handling the hood support

- **Do not disassemble the support as the cylinder is filled with pressurized gas.**

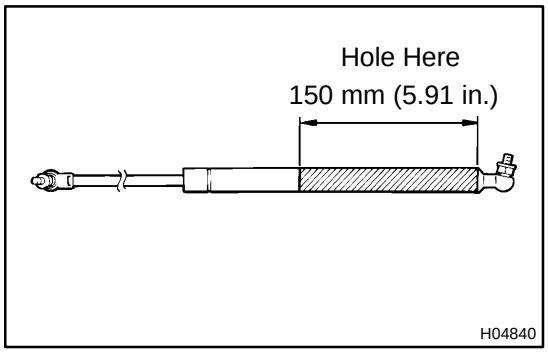

- **If the hood support is to be replaced, drill a 2.0 – 3.0 mm (0.079 – 0.118 in.) hole in the area shown in the illustration to completely release the high pressure gas before disposing of it.**
- **When drilling, chips may fly out so work carefully.**
- **The gas is colorless, odorless and non – toxic.**
- **When working, handle the hood support carefully. Never score or scratch the exposed part of the piston rod, and allow any paint or oil to get on it.**
- **Do not turn the piston rod and cylinder with the hood support fully extended.**

3. INSTALL HOOD SUPPORT

(a) Install the bolt and hood support to the body.
Torque: 22 N·m (224 kgf·cm, 16 ft·lbf)

(b) Install the bolt and hood support to the hood.
Torque: 22 N·m (224 kgf·cm, 16 ft·lbf)

FRONT DOOR

COMPONENTS

BO2EL–02

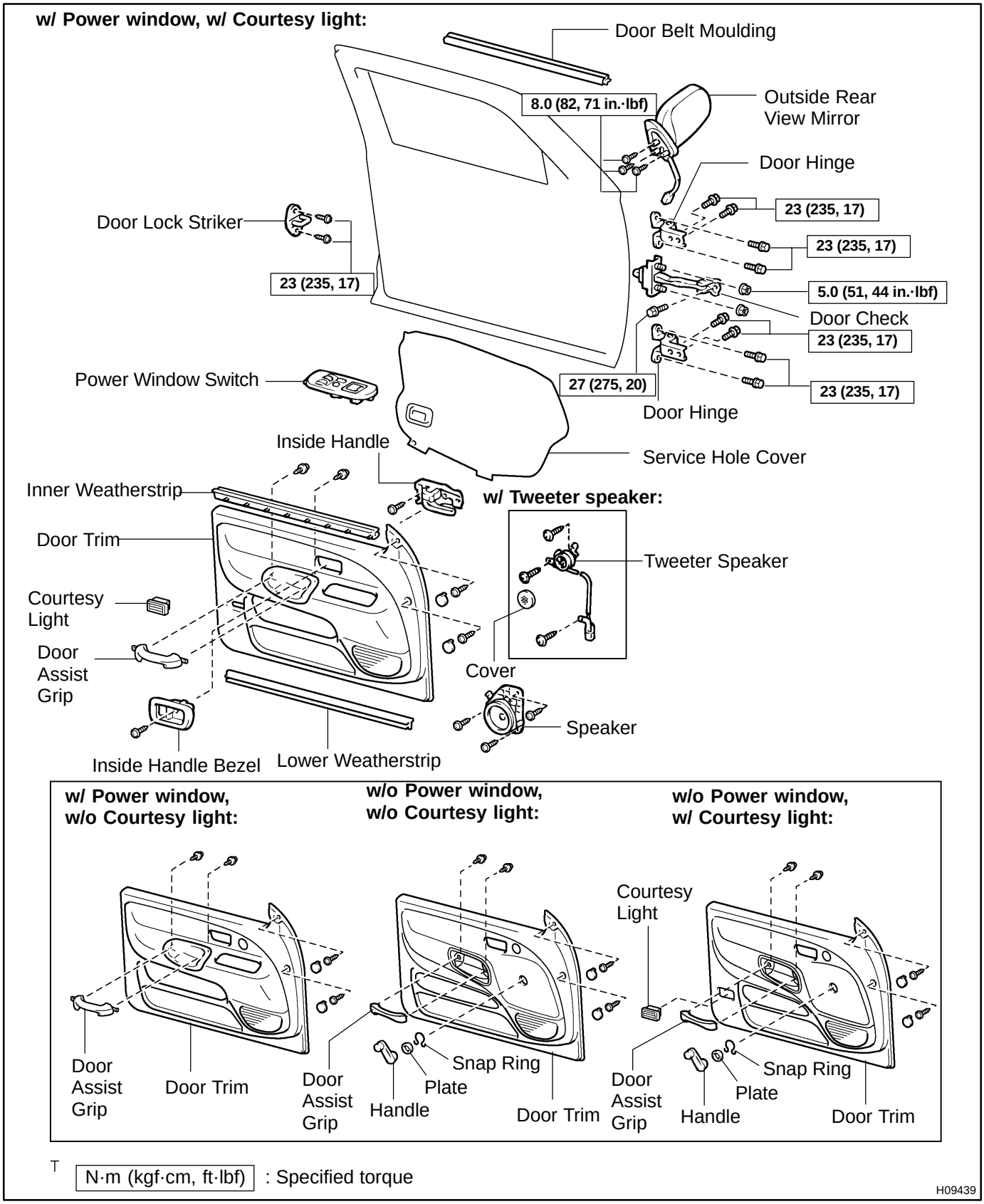

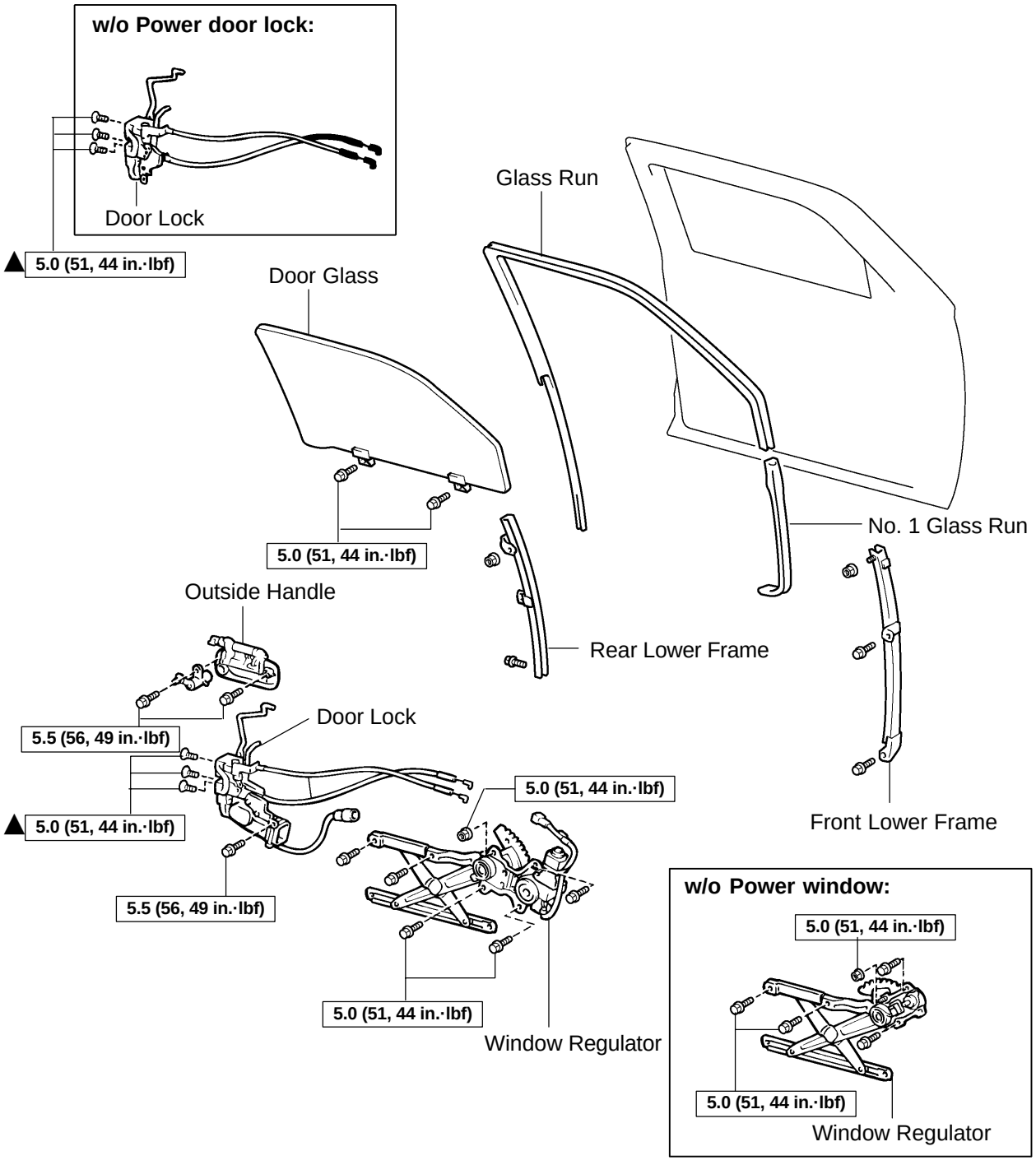

T

N·m (kgf·cm, ft·lbf) : Specified torque

▲ Precoated part

H11407

BO0I3–03

DISASSEMBLY

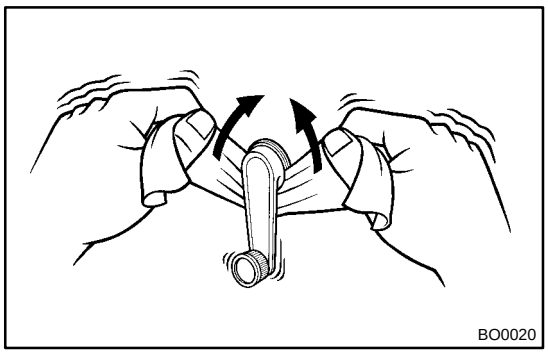

1. w/o Power window:
REMOVE REGULATOR HANDLE

Pull off the snap ring with a cloth and remove the regulator handle and plate.

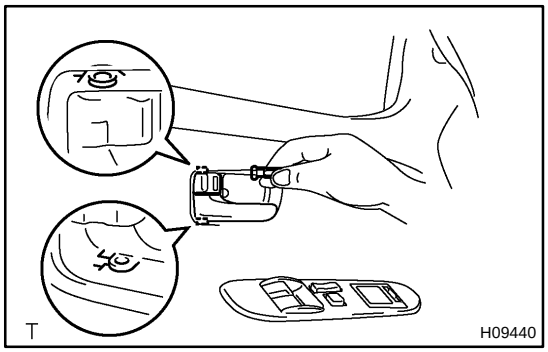

2. REMOVE INSIDE HANDLE BEZEL

(a) Remove the screw.

(b) Using a screwdriver, remove the inside handle bezel as shown in the illustration.

HINT:

Tape the screwdriver tip before use.

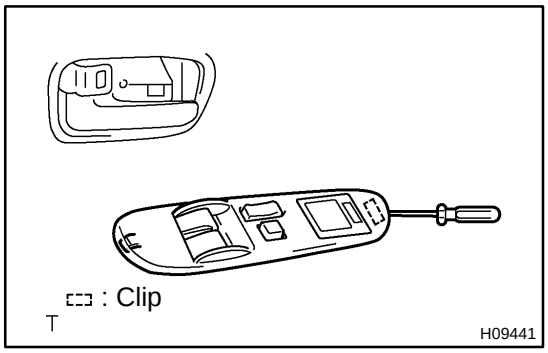

3. w/ Power window:
REMOVE POWER WINDOW SWITCH

(a) Using a screwdriver, remove the power window switch.

HINT:

Tape the screwdriver tip before use.

(b) Disconnect the connectors.

4. w/ Courtesy light:
REMOVE COURTESY LIGHT

(a) Using a screwdriver, remove the courtesy light.

HINT:

Tape the screwdriver tip before use.

(b) Disconnect the connector.

5. w/o Courtesy light:
REMOVE COURTESY LIGHT COVER

Using a screwdriver, remove the courtesy light cover.

HINT:

Tape the screwdriver tip before use.

6. w/ Tweeter speaker:
REMOVE TWEETER SPEAKER

(a) Using a screwdriver, remove the tweeter speaker cover.

HINT:

Tape the screwdriver tip before use.

(b) Disconnect the connector.

(c) Remove the 3 screws and tweeter speaker.

7. REMOVE DOOR TRIM

(a) Remove the 2 caps and 2 screws.

(b) Insert a screwdriver between the door trim and door panel to remove the door trim.

HINT:

Tape the screwdriver tip before use.

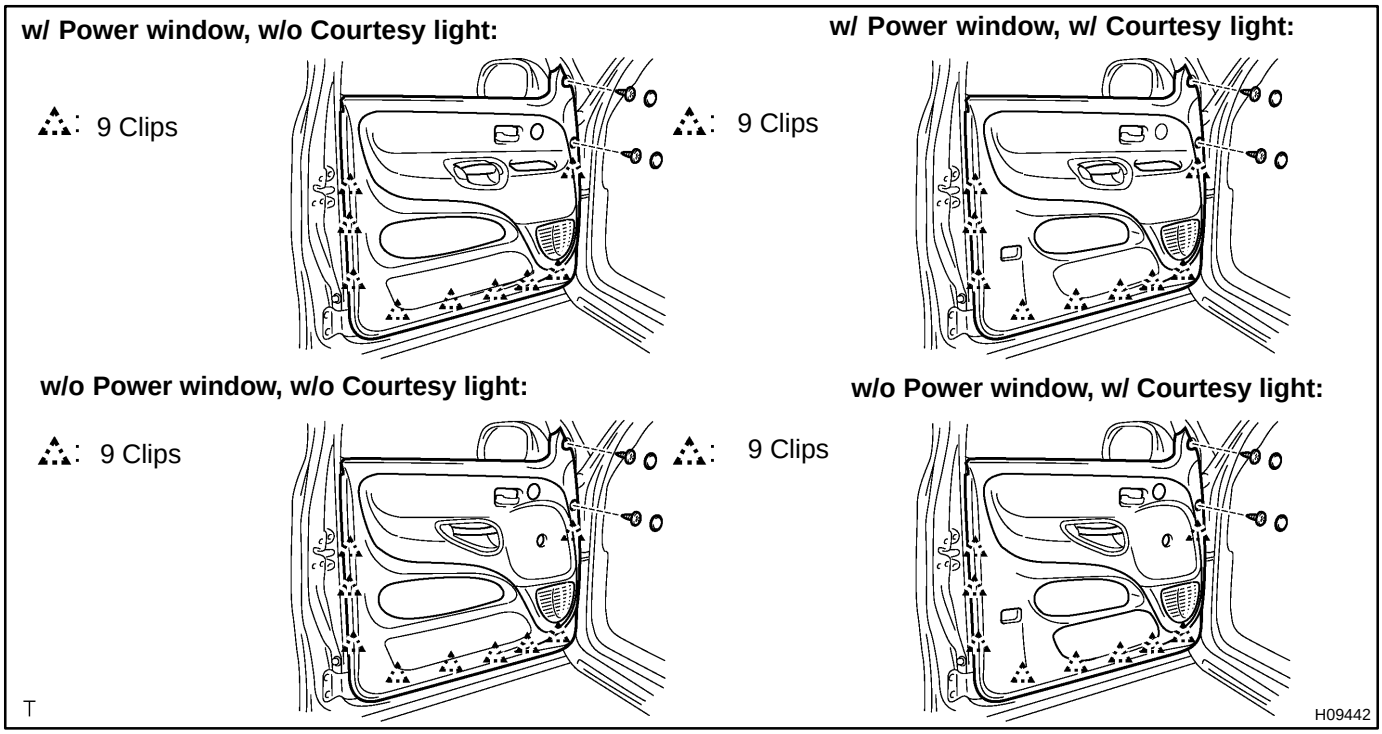

(c) Pull the door trim upward to remove it.

8. REMOVE DOOR ASSIST GRIP

Remove the 2 screws and door assist grip from the door trim.

9. REMOVE INNER WEATHERSTRIP

10. REMOVE LOWER WEATHERSTRIP

11. REMOVE INSIDE HANDLE

(a) Remove the screw.

(b) Slide the inside handle backward to remove it.

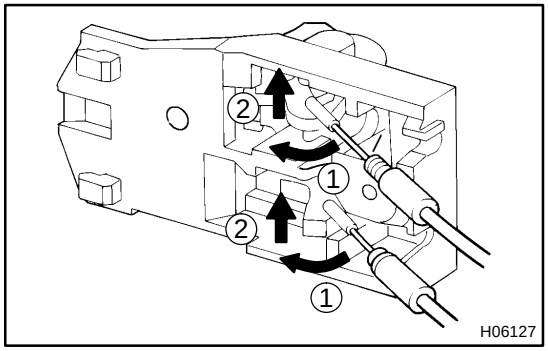

(c) Disconnect the 2 cables from the inside handle as shown in the illustration.

12. REMOVE SERVICE HOLE COVER

(a) Disconnect the clamps and connector.

(b) Remove the service hole cover.

13. REMOVE SPEAKER

(a) Disconnect the connector.

(b) Remove the 3 screws and speaker.

14. REMOVE OUTSIDE REAR VIEW MIRROR

(a) w/ Remote control:
Disconnect the connector.

(b) Remove the 3 screws and outside rear view mirror.

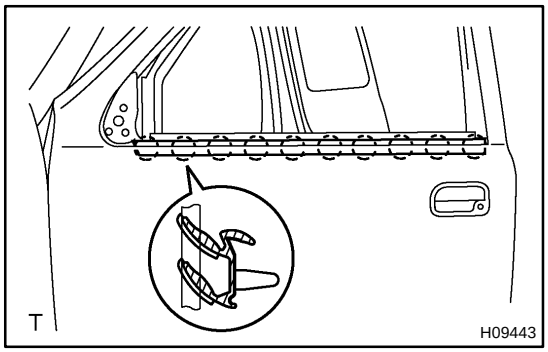

15. REMOVE DOOR BELT MOULDING

Using a moulding remover, remove the door belt moulding.

16. REMOVE DOOR GLASS RUN

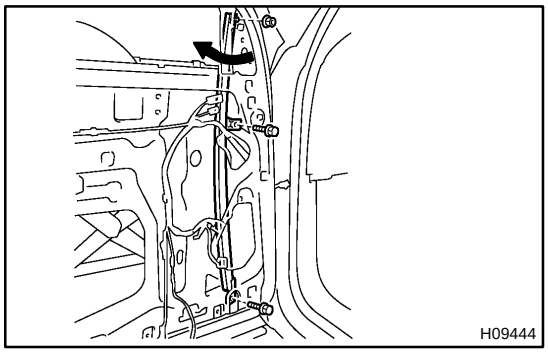

17. REMOVE FRONT LOWER FRAME

Remove the 2 bolts, nut and front lower frame as shown in the illustration.

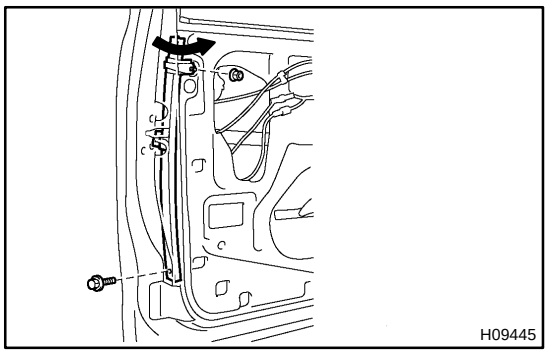

18. REMOVE REAR LOWER FRAME

Remove the bolt, nut and rear lower frame as shown in the illustration.

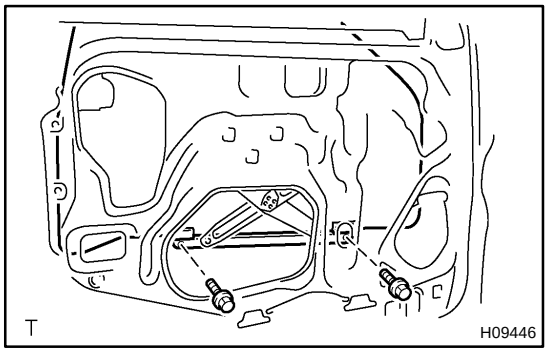

19. REMOVE DOOR GLASS

(a) Open the door glass until the bolts appear in the service hole.

(b) Remove the 2 bolts and door glass.

NOTICE:

Do not damage the door glass.

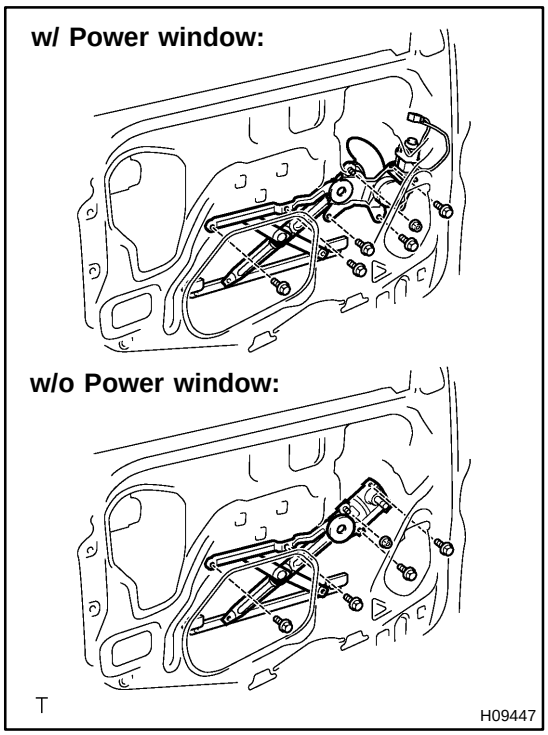

20. REMOVE WINDOW REGULATOR

(a) w/ Power window:
Disconnect the connector.

(b) w/ Power window:
Remove the 5 bolts, nut and window regulator.

(c) w/o Power window:
Remove the 4 bolts, nut and window regulator.

(d) Remove the window regulator through the service hole.

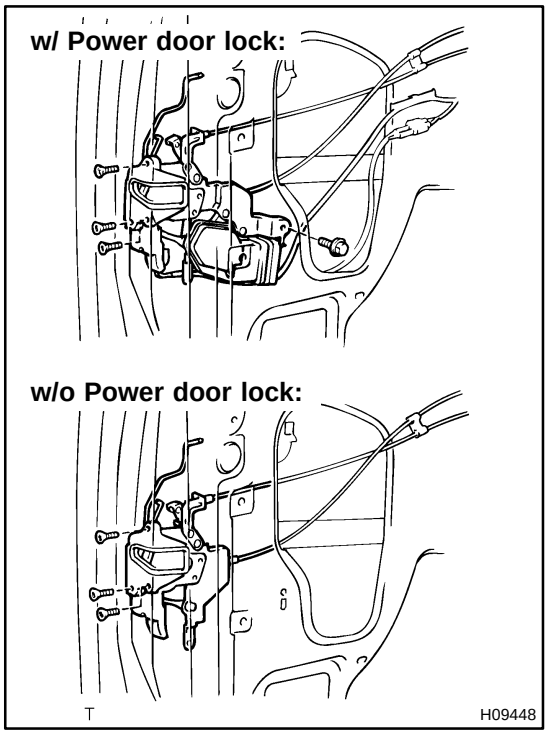

21. REMOVE DOOR LOCK

(a) Disconnect the 2 links from outside handle and door lock cylinder.

(b) w/ Power door lock:
Disconnect the connector and remove the bolt.

(c) Using a torx socket wrench, remove the 3 torx screws.
Torx socket wrench: T30 (Part No. 09042–00010 or locally manufactured tool)

22. REMOVE OUTSIDE HANDLE WITH DOOR LOCK CYLINDER

(a) Remove the 2 bolts and outside handle with door lock cylinder.

(b) Remove the door lock cylinder from the outside handle.

BO0I4–02

ADJUSTMENT

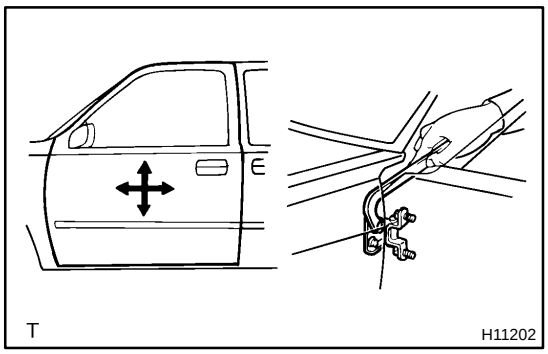

1. ADJUST DOOR IN FORWARD/REARWARD AND VERTICAL DIRECTIONS

Using SST, adjust the door by loosening the body side hinge bolts.

SST 09812–00010

Torque: 23 N·m (235 kgf·cm, 17 ft·lbf)

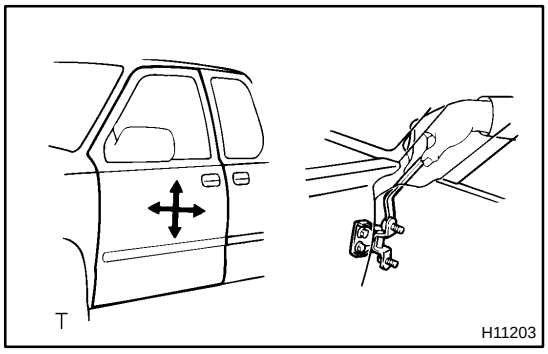

2. ADJUST DOOR IN LEFT/RIGHT AND VERTICAL DIRECTIONS

Adjust the door by loosening the door side hinge bolts.

HINT:

Substitute the standard bolt for the centering bolts.

(See page BO–7)

Torque: 23 N·m (235 kgf·cm, 17 ft·lbf)

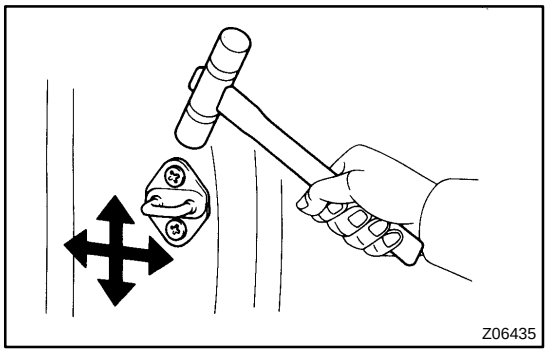

3. ADJUST DOOR LOCK STRIKER

(a) Check that the door fit and door lock linkages are adjusted correctly.

(b) Adjust the striker position by slightly loosening the striker mounting screws, and hitting the striker with a hammer.

(c) Tighten the striker mounting screws again.

Torque: 23 N·m (235 kgf·cm, 17 ft·lbf)

BO2EM–01

REASSEMBLY

1. INSTALL OUTSIDE HANDLE WITH DOOR LOCK CYLINDER

(a) Install the door lock cylinder to the outside handle.

(b) Install the outside handle with door lock cylinder with the 2 bolts.

Torque: 5.5 N·m (56 kgf·cm, 49 in.·lbf)

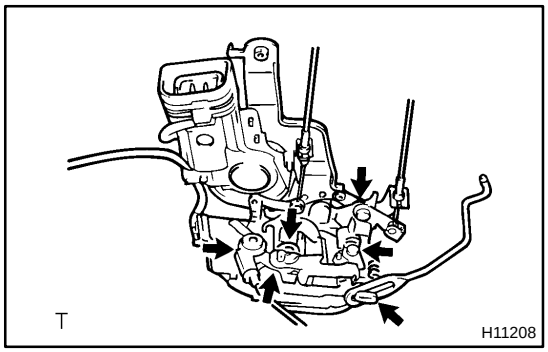

2. INSTALL DOOR LOCK

HINT:

Apply MP grease to the sliding and rotating parts of the door lock.

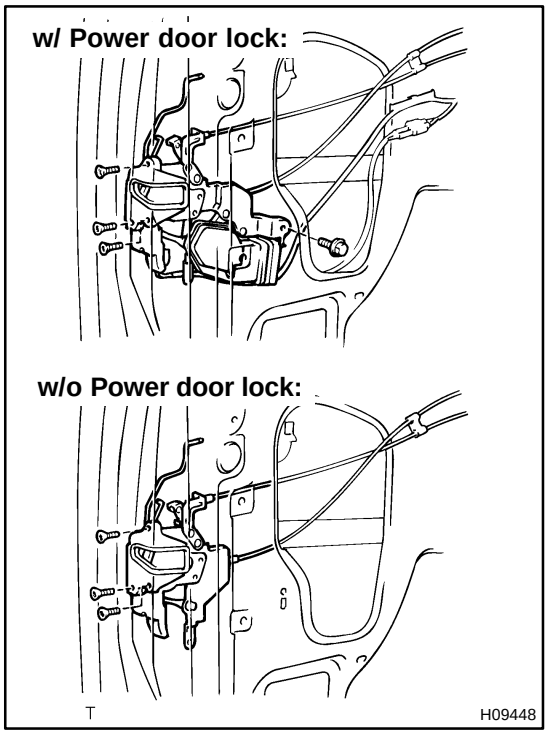

(a) Using a torx socket wrench, install the door lock with the 3 torx screws.

Torx socket wrench: T30 (Part No. 09042–00010 or locally manufactured tool)

Torque: 5.0 N·m (51 kgf·cm, 44 in.·lbf)

HINT:

Apply adhesive to the 3 screws.

Part No. 08833–00070, THREE BOND 1324 or equivalent

(b) w/ Power door lock:

Connect the connector and install the bolt.

Torque: 5.5 N·m (56 kgf·cm, 49 in.·lbf)

(c) Connect the 2 links to the outside handle and door lock cylinder.

w/ Power window:

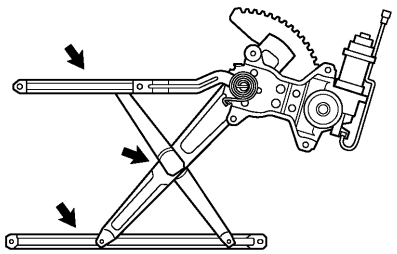

w/o Power window:

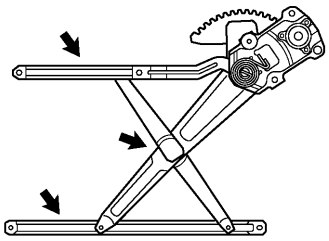

H09449

3. INSTALL WINDOW REGULATOR

HINT:

Apply MP grease to the sliding and rotating parts of the window regulator.

(a) Install the window regulator through the service hole.

w/ Power window:

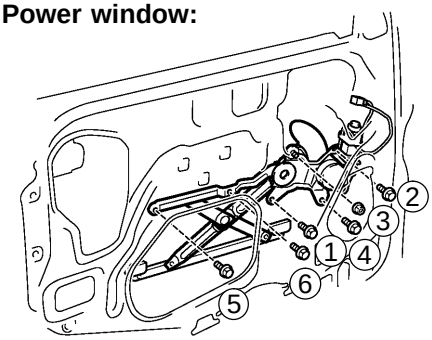

w/o Power window:

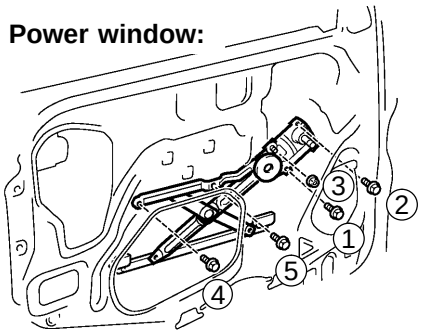

T

H09447

(b) w/ Power window:

Install the window regulator with the 5 bolts and nut.

Torque:

Bolt: 5.0 N·m (51 kgf·cm, 44 in.·lbf)

Nut: 5.0 N·m (51 kgf·cm, 44 in.·lbf)

HINT:

When installing the window regulator, torque the bolts and nut in the order shown in the illustration.

(c) w/o Power window:

Install the window regulator with the 4 bolts and nut.

Torque:

Bolt: 5.0 N·m (51 kgf·cm, 44 in.·lbf)

Nut: 5.0 N·m (51 kgf·cm, 44 in.·lbf)

HINT:

When installing the window regulator, torque the bolts and nut in the order shown in the illustration.

(d) w/ Power window:

Connect the connector.

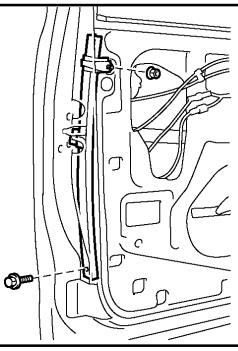

H09445

4. INSTALL REAR LOWER FRAME

Install the rear lower frame with the bolt and nut.

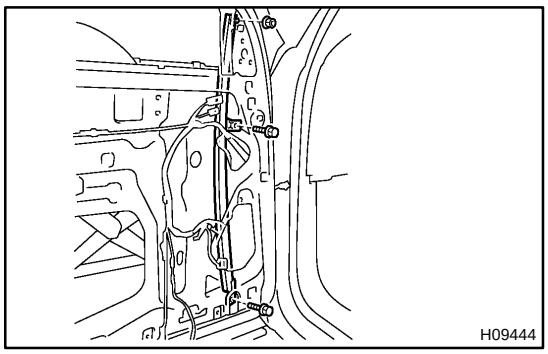

5. INSTALL FRONT LOWER FRAME

Install the front lower frame with the 2 bolts and nut.

6. INSTALL DOOR GLASS RUN

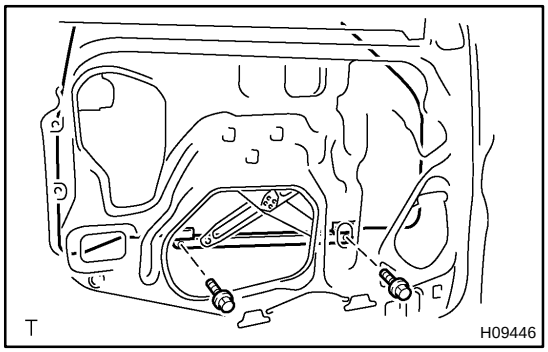

7. INSTALL DOOR GLASS

NOTICE:

Do not damage the door glass.

Install the door glass with the 2 bolts.

Torque: 5.0 N·m (51 kgf·cm, 44 in.·lbf)

8. INSTALL DOOR BELT MOULDING

9. INSTALL OUTSIDE REAR VIEW MIRROR

(a) Install the outside rear view mirror with the 3 screws.

Torque: 8.0 N·m (82 kgf·cm, 71 in.·lbf)

(b) w/ Remote control:
Connect the connector.

10. INSTALL SPEAKER

(a) Install the speaker with the 3 screws.

(b) Connect the connector.

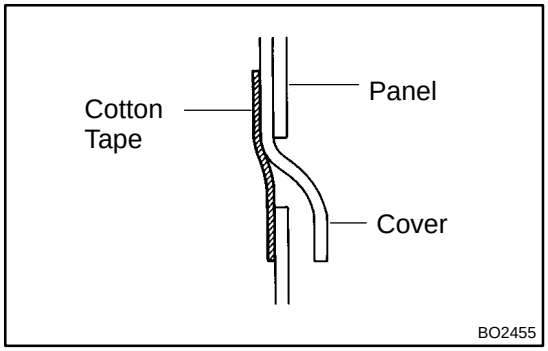

11. INSTALL SERVICE HOLE COVER

(a) Install the service hole cover.

HINT:

▲ When installing the service hole cover, pull out the cables and connectors through the service hole cover.

▲ There should be no wrinkles or folds after attaching the service hole cover.

▲ After attaching the service hole cove, sealing condition shall be confirmed.

(b) Connect the clamps and connector.

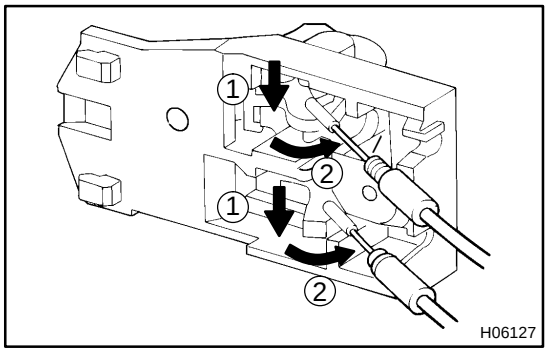

12. INSTALL INSIDE HANDLE

(a) Connect the 2 cables to the inside handle.

(b) Slide the inside handle forward to install it.

(c) Install the screw.

13. INSTALL DOOR ASSIST GRIP

Install the door assist grip with the 2 screws to the door trim.

14. INSTALL LOWER WEATHERSTRIP

15. INSTALL INNER WEATHERSTRIP

16. INSTALL DOOR TRIM

Install the door trim with the 2 screws and 2 caps.

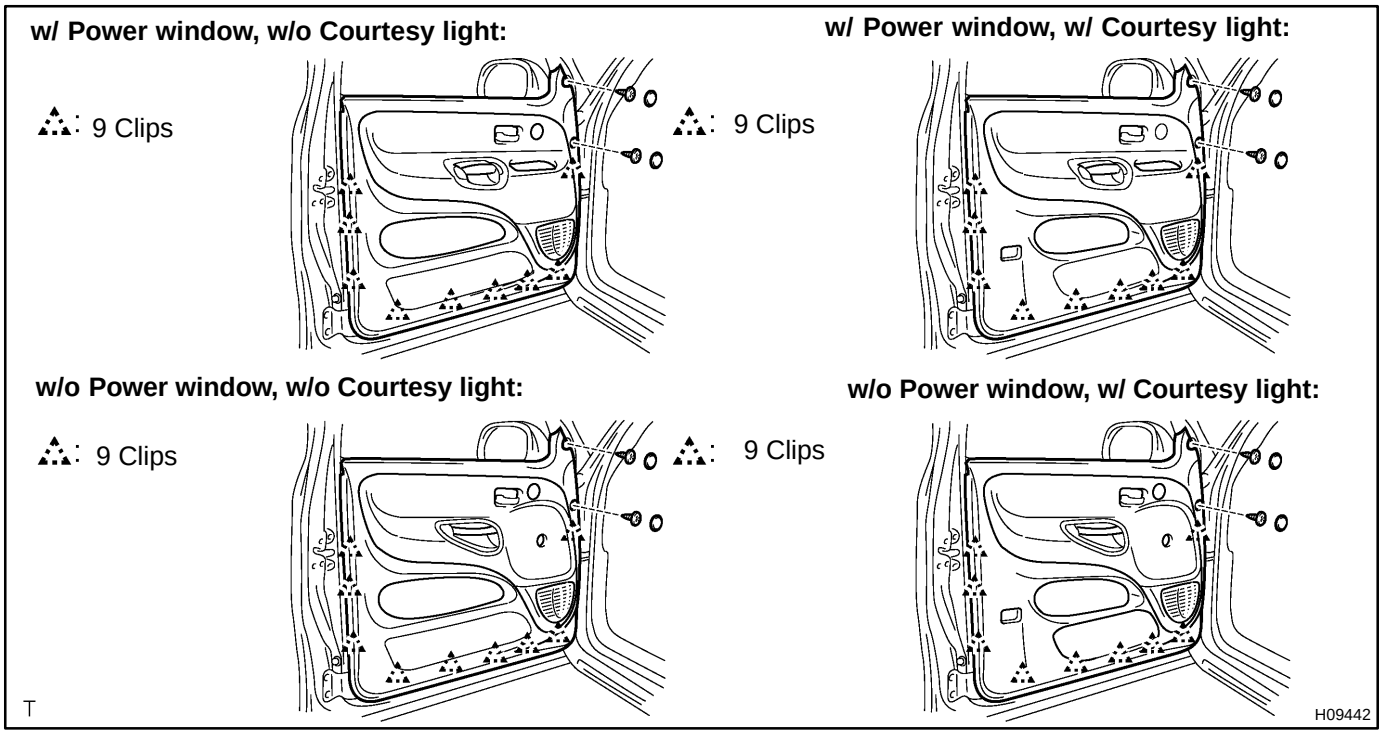

17. w/ Tweeter speaker:
INSTALL TWEETER SPEAKER

(a) Install the tweeter speaker with the 3 screws, then connect the connector.

(b) Install the tweeter speaker cover.

18. w/ Courtesy light:
INSTALL COURTESY LIGHT

(a) Connect the connector.

(b) Install the courtesy light.

19. w/o Courtesy light:
INSTALL COURTESY LIGHT COVER

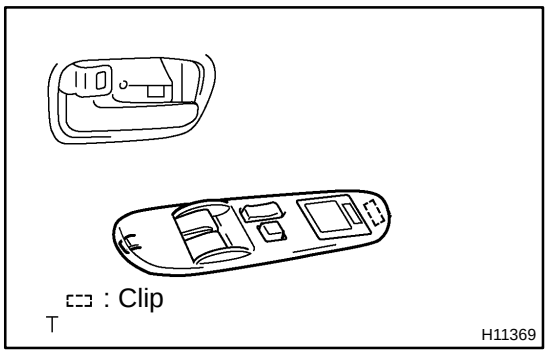

20. w/ Power window:
INSTALL POWER WINDOW SWITCH

(a) Connect the connectors.

(b) Install the power window switch.

21. INSTALL INSIDE HANDLE BEZEL

Install the inside handle bezel with the screw.

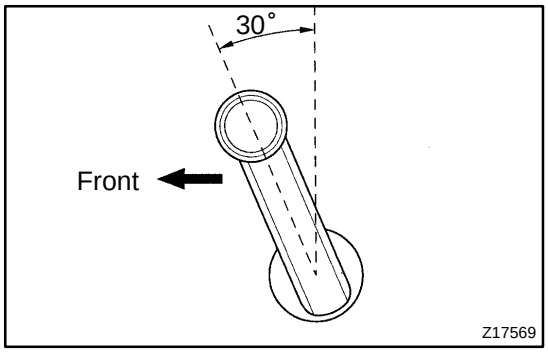

22. w/o Power window:
INSTALL REGULATOR HANDLE

Install the regulator handle with the snap ring.

HINT:

With the door window fully closed, install the plate and the regulator handle with the snap ring as shown in the illustration.

ACCESS DOOR

COMPONENTS

BO2EN–01

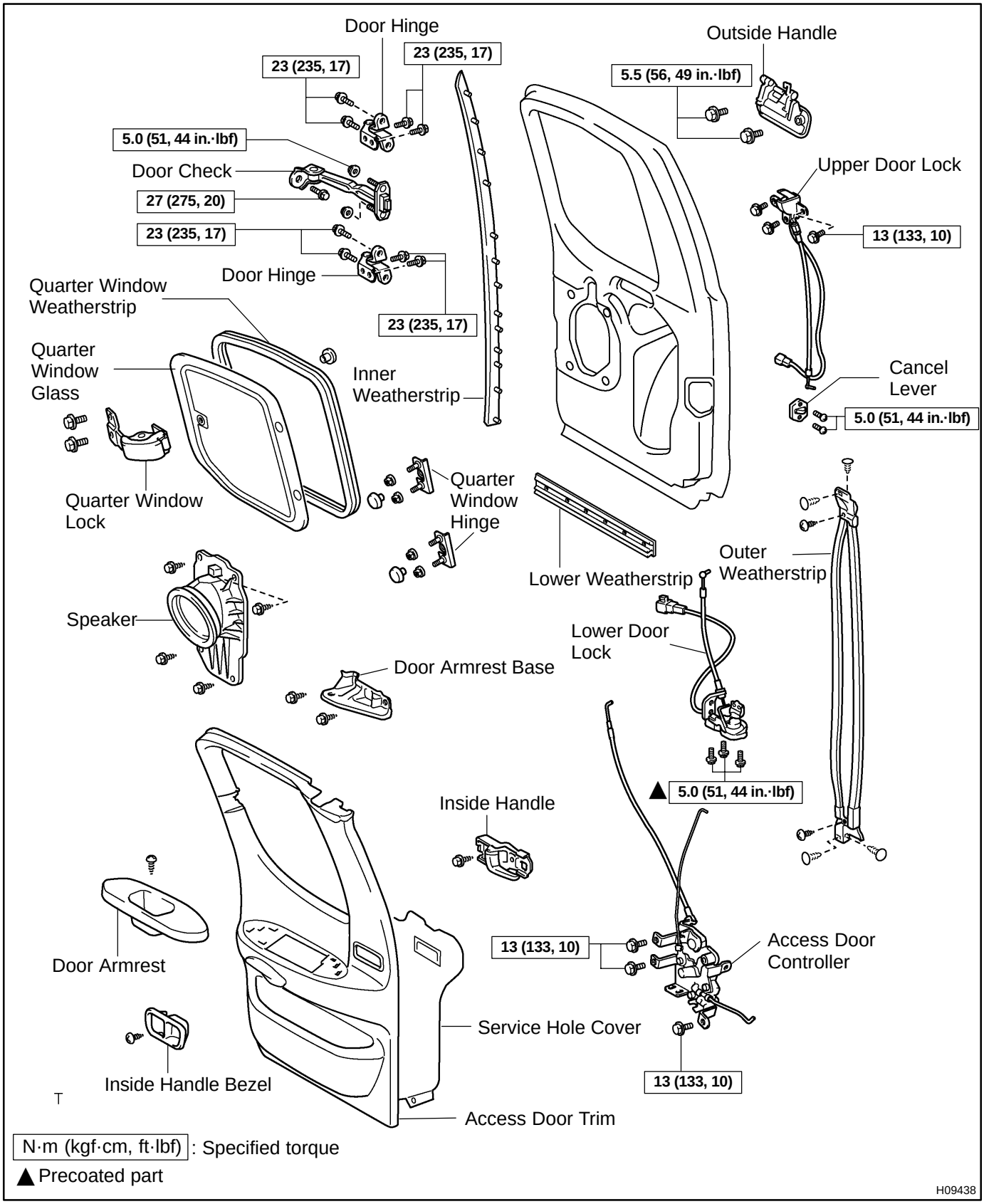

BO2EO–01

DISASSEMBLY

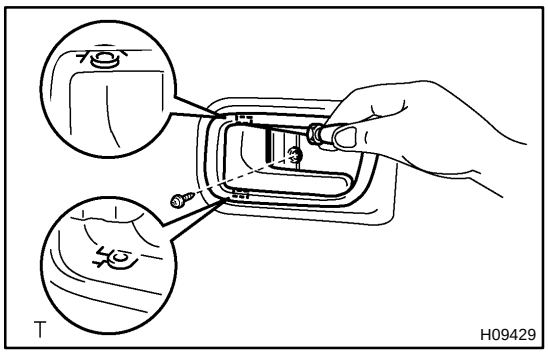

1. REMOVE DOOR INSIDE HANDLE BEZEL

(a) Remove the screw.

(b) Using a screwdriver, remove the door inside handle bezel.

HINT:

Tape the screwdriver tip before use.

2. REMOVE DOOR ARMREST

(a) Remove the screw.

(b) Using a screwdriver, remove the door armrest.

HINT:

Tape the screwdriver tip before use.

3. REMOVE ACCESS DOOR TRIM

(a) Release the quarter window lock.

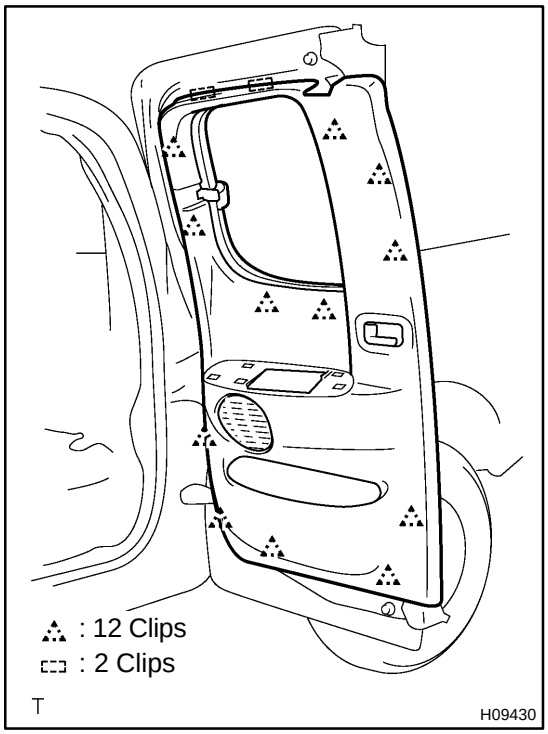

(b) Insert a screwdriver between the door trim and door panel to remove the door trim.

HINT:

Tape the screwdriver tip before use.

4. REMOVE DOOR ARMREST BASE

Remove the 2 screws and door armrest base.

5. REMOVE SPEAKER

(a) Disconnect the connector.

(b) Remove the 4 screws and speaker.

6. REMOVE DOOR INSIDE HANDLE

(a) Remove the screw and slide the inside handle forward.

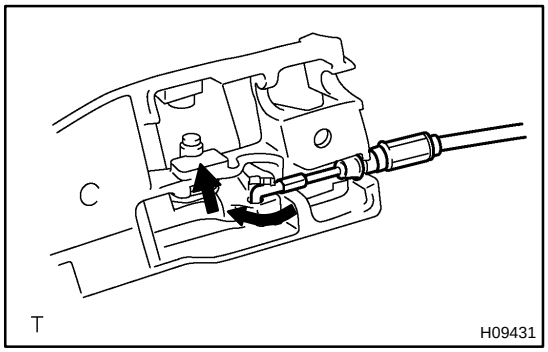

(b) Disconnect the cable as shown in the illustration.

7. REMOVE SERVICE HOLE COVER

(a) Disconnect the connector.

(b) Remove the service hole cover.

HINT:

Bring out the cable and connector through the service hole cover.

8. REMOVE ACCESS DOOR CONTROLLER

(a) Disconnect the 2 cables and 2 links.

(b) Disengage the 2 clamps.

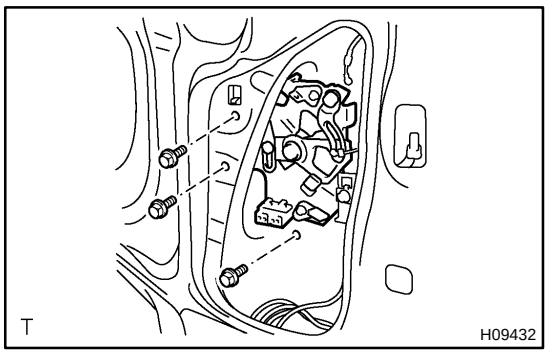

(c) Remove the 3 bolts and access door controller.

9. REMOVE LOWER DOOR LOCK

(a) Disconnect the connector.

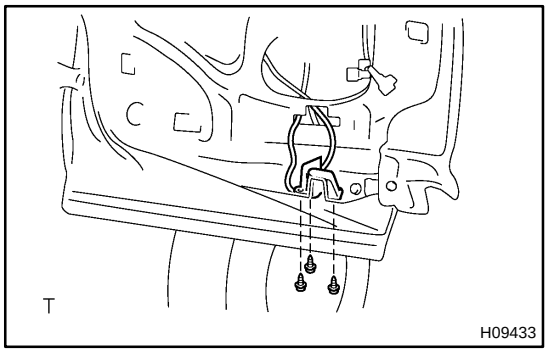

(b) Using a torx socket wrench, remove the 3 torx screws and lower door lock.

Torx socket wrench: T30 (Part No. 09042–00010 or locally manufactured tool)

10. REMOVE UPPER DOOR LOCK

(a) Disconnect the connector.

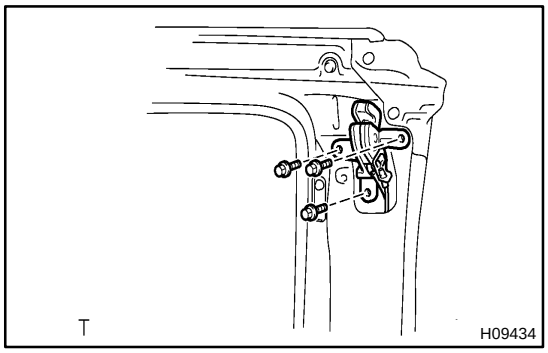

(b) Remove the 3 bolts and upper door lock.

11. REMOVE OUTSIDE HANDLE

Remove the 2 bolts and outside handle.

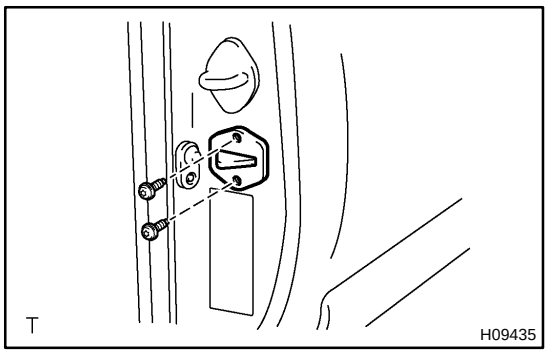

12. REMOVE CANCEL LEVER

Using a torx socket wrench, remove the 2 torx screws and cancel lever.

Torx socket wrench: T30 (Part No. 09042–00010 or locally manufactured tool)

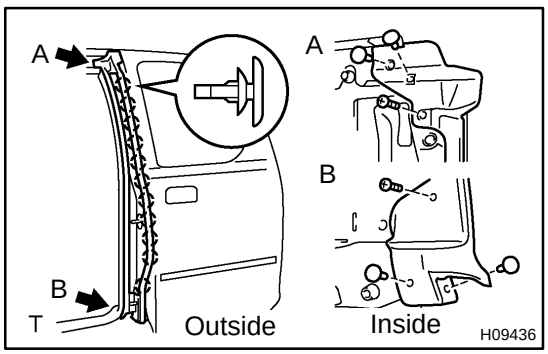

13. REMOVE OUTER WEATHERSTRIP

(a) Remove the 2 screws and 4 clips.

(b) Using a clip remover, remove the outer weatherstrip.

14. REMOVE INNER WEATHERSTRIP

Using a clip remover, remove the inner weatherstrip.

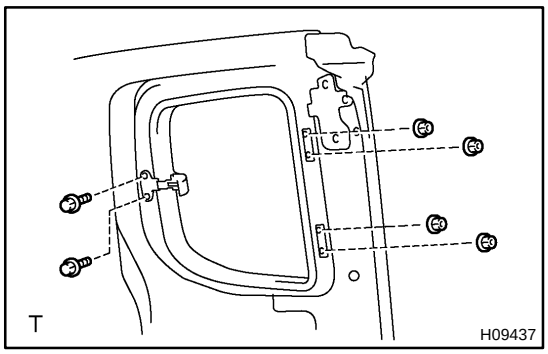

15. REMOVE QUARTER WINDOW AND WEATHERSTRIP

(a) Remove the 2 bolts, 4 nuts and quarter window.

(b) Remove the weatherstrip.

16. REMOVE QUARTER WINDOW LOCK AND HINGES

(a) Remove the screws and window lock from the quarter window.

(b) Remove the 2 screws and 2 hinges from the quarter window.

BO2EP–01

ADJUSTMENT

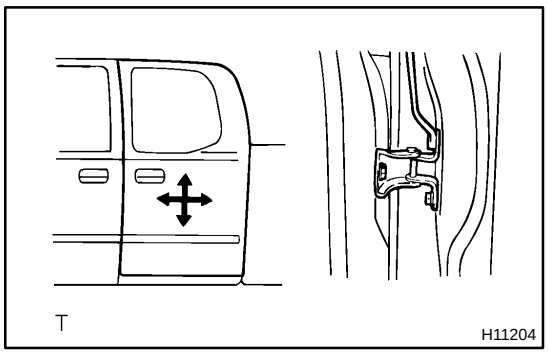

1. ADJUST DOOR IN FORWARD/REARWARD AND VERTICAL DIRECTIONS

Adjust the door by loosening the body side hinge bolts.

Torque: 23 N·m (235 kgf·cm, 17 ft·lbf)

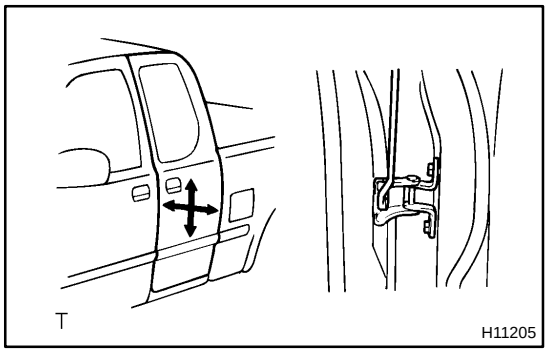

2. ADJUST DOOR IN LEFT/RIGHT AND VERTICAL DIRECTIONS

Adjust the door by loosening the door side bolts.

HINT:

Substitute the standard bolt for the centering bolts.

(See page BO–7)

Torque: 23 N·m (235 kgf·cm, 17 ft·lbf)

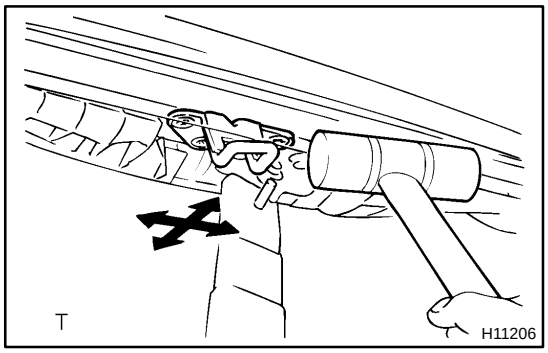

3. ADJUST DOOR LOCK UPPER STRIKER

(a) Check that the door fit and door lock linkages are adjusted correctly.

(b) Adjust the striker position by slightly loosening the striker mounting screws, and hitting the striker with a hammer.

(c) Tighten the striker mounting screws again.

Torque: 23 N·m (235 kgf·cm, 17 ft·lbf)

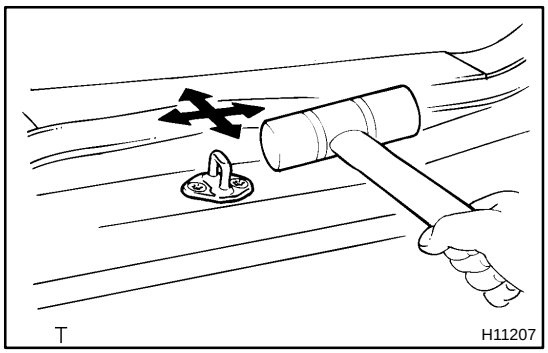

4. ADJUST DOOR LOCK LOWER STRIKER

(a) Check that the door fit and door lock linkages are adjusted correctly.

(b) Adjust the striker position by slightly loosening the striker mounting screws, and hitting the striker with a hammer.

(c) Tighten the striker mounting screws again.

Torque: 23 N·m (235 kgf·cm, 17 ft·lbf)

BO2EQ–01

REASSEMBLY

1. INSTALL QUARTER WINDOW LOCK AND HINGES

(a) Install the 2 hinges with the 2 screws to the quarter window.

(b) Install the window lock with the screw to the quarter window.

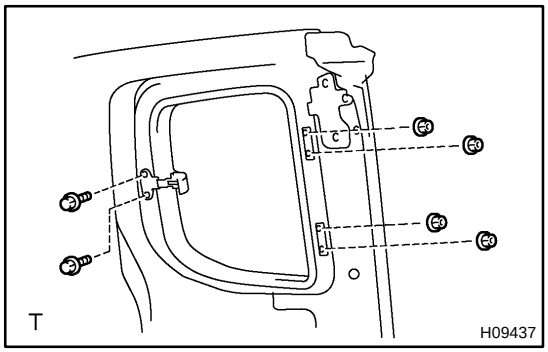

2. INSTALL QUARTER WINDOW AND WEATHERSTRIP

(a) Install the weatherstrip.

(b) Install the quarter window with the 2 bolts and 4 nuts.

3. INSTALL INNER WEATHERSTRIP

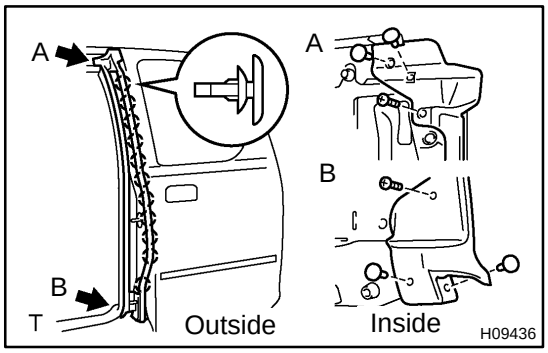

4. INSTALL OUTER WEATHERSTRIP

Install the outer weatherstrip with the 2 screws and 4 clips.

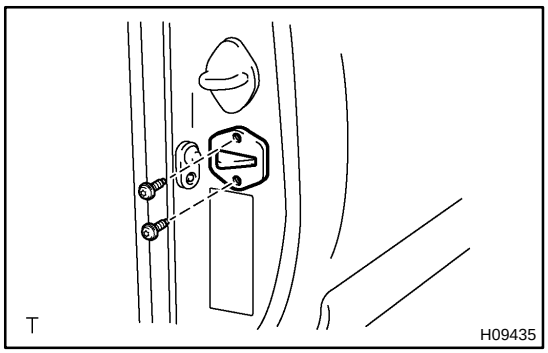

5. INSTALL CANCEL LEVER

Using a torx socket wrench, install the cancel lever with the 2 torx screws.

Torx socket wrench: T30 (Part No. 09042–00010 or locally manufactured tool)

Torque: 5.0 N·m (51 kgf·cm, 44 in.·lbf)

6. INSTALL OUTSIDE HANDLE

Install the outside handle with the 2 bolts.

Torque: 5.5 N·m (56 kgf·cm, 49 in.·lbf)

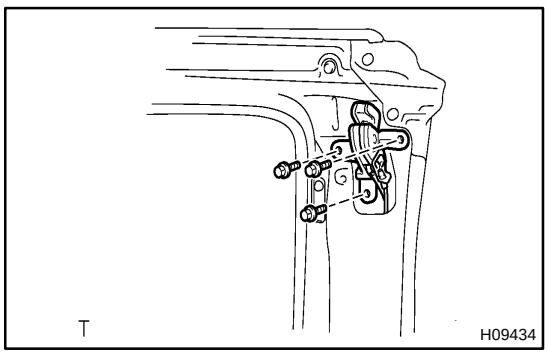

7. INSTALL UPPER DOOR LOCK

(a) Install the upper door lock with the 3 bolts.

Torque: 13 N·m (133 kgf·cm, 10 ft·lbf)

(b) Connect the connector.

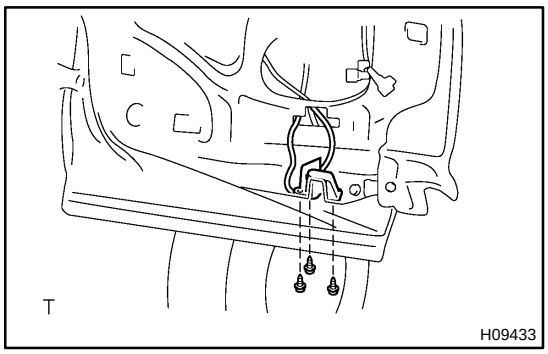

8. INSTALL LOWER DOOR LOCK

(a) Using a torx socket wrench, install the lower door lock with the 3 torx screws.
Torx socket wrench: T30 (Part No. 09042–00010 or locally manufactured tool)
Torque: 5.0 N·m (51 kgf·cm, 44 in.·lbf)

(b) Connect the connector.

HINT:

Apply adhesive to the 3 torx screws.
Part No. 08833–00070, THREE BOND 1342 or equivalent

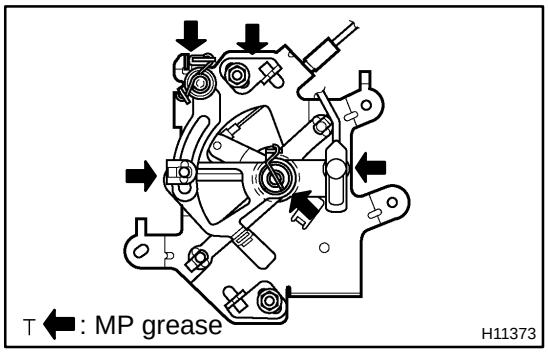

9. INSTALL ACCESS DOOR CONTROLLER

HINT:

Apply MP grease to the sliding and rotating parts of access door controller.

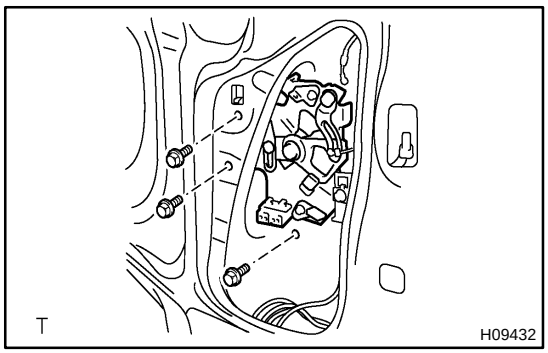

(a) Install the access door controller with the 3 bolts.
Torque: 13 N·m (133 kgf·cm, 10 ft·lbf)

(b) Attach the 2 clamps.

(c) Connect the 2 cables and 2 links.

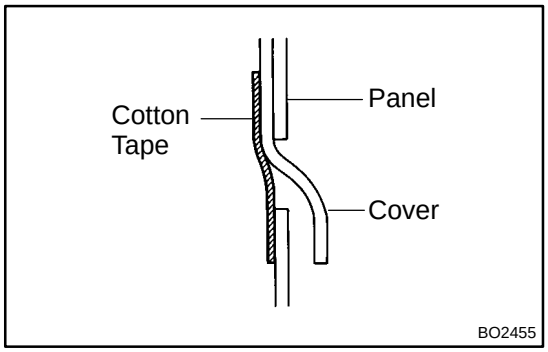

10. INSTALL SERVICE HOLE COVER

(a) Install the service hole cover.

HINT:

- ▲ When installing the service hole cover, pull out the cable and connector through the service hole cover.
- ▲ There should be no wrinkles or folds after attaching the service hole cover.
- ▲ After attaching the service hole cover, sealing condition shall be confirmed.

(b) Connect the connector.

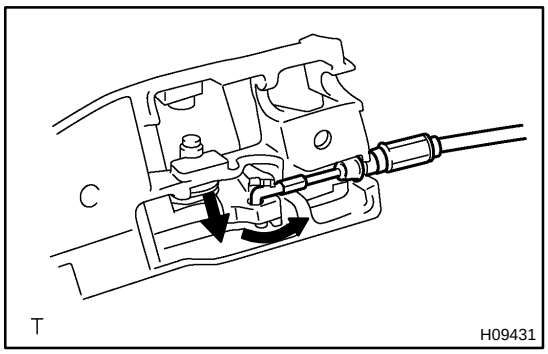

11. INSTALL DOOR INSIDE HANDLE

(a) Connect the cable to the inside handle.

(b) Install the inside handle with the screw.

12. INSTALL SPEAKER

(a) Install the speaker with the 4 screws.

(b) Connect the connector.

13. INSTALL DOOR ARMREST BASE

Install the door armrest base with the 2 screws.

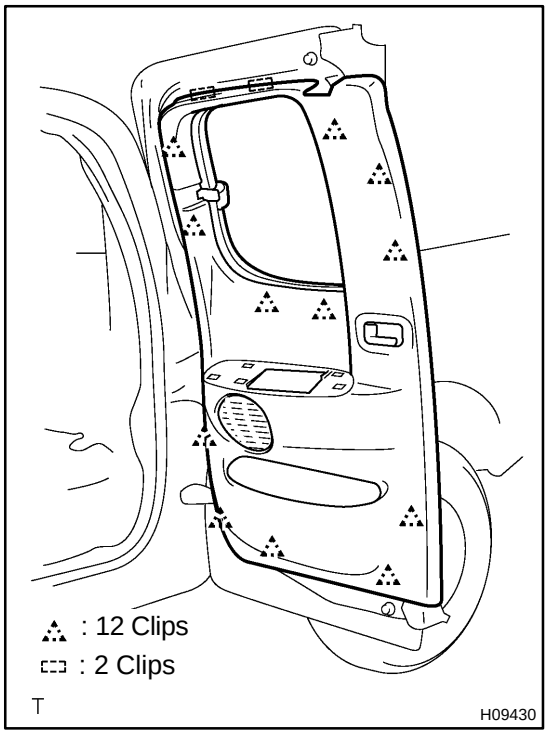

14. INSTALL ACCESS DOOR TRIM

(a) Install the door trim.

(b) Lock the quarter window lock.

15. INSTALL DOOR ARMREST

Install the door armrest with the screw.

16. INSTALL DOOR INSIDE HANDLE BEZEL

Install the door inside handle bezel with the screw.

FRONT WIPER AND WASHER

BO0IA–02

COMPONENTS

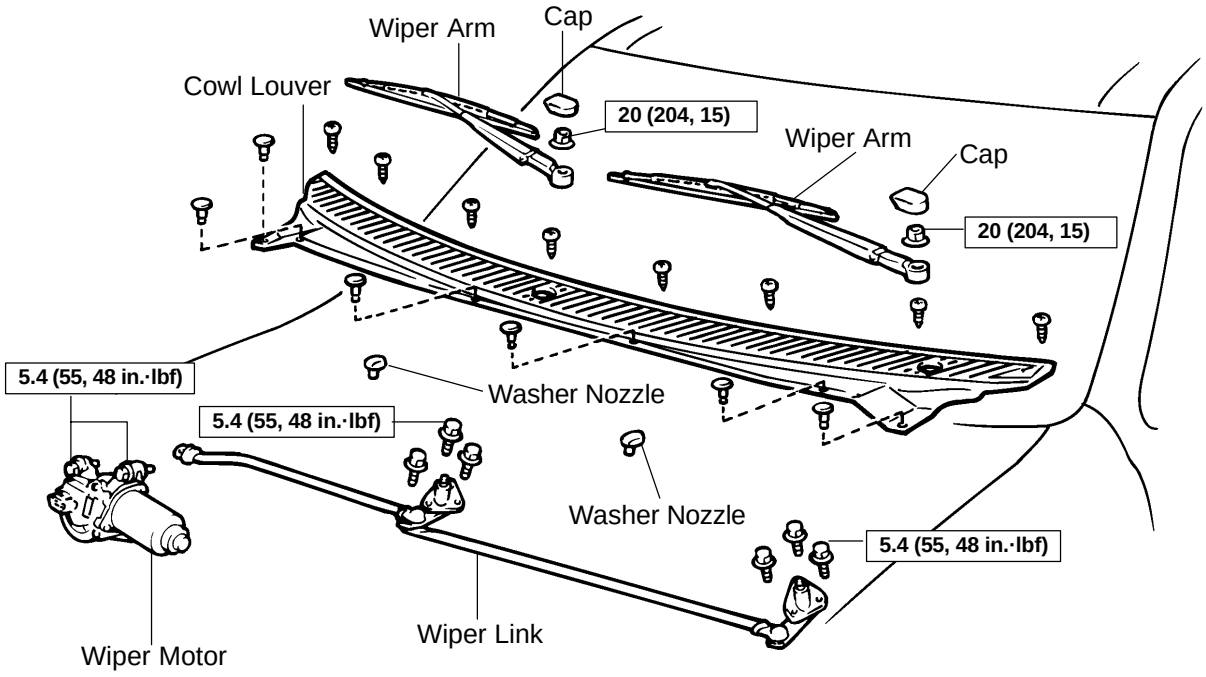

N·m (kgf·cm, ft·lbf) : Specified torque

T

H09480

BO0IB–02

REMOVAL

1. REMOVE WIPER ARMS

(a) Using a screwdriver, remove the 2 caps.

HINT:

Tape the screwdriver tip before use.

(b) Remove the 2 nuts and wiper arms.

2. REMOVE COWL LOUVER

Remove the 8 screws, 6 clips and cowl louver.

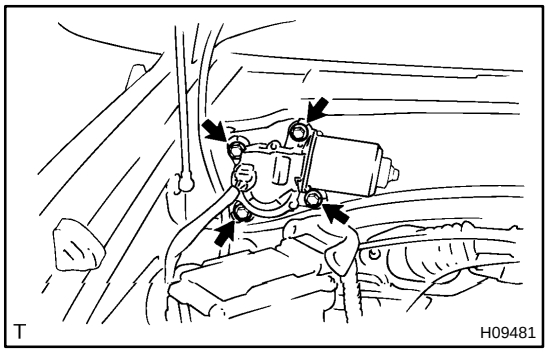

3. REMOVE WIPER MOTOR

(a) Disconnect the connector, then unfasten the 4 bolts.

(b) Disconnect the motor from the wiper link and remove the motor.

4. REMOVE WIPER LINK

(a) Remove the 6 bolts.

(b) Remove the wiper link through the service hole.

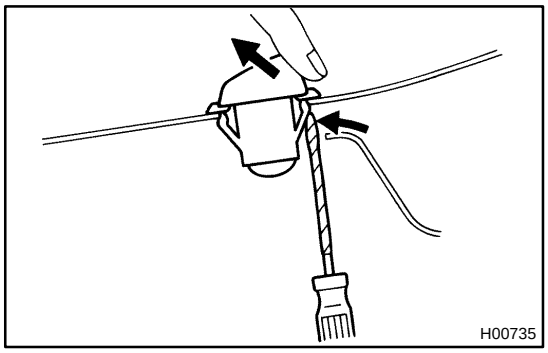

5. REMOVE WASHER NOZZLE

(a) Disconnect the washer hose.

(b) Using a screwdriver, remove the nozzle.

HINT:

Tape the screwdriver tip before use.

(c) Employ the same manner described above to the other side.

BO40L–01

INSPECTION

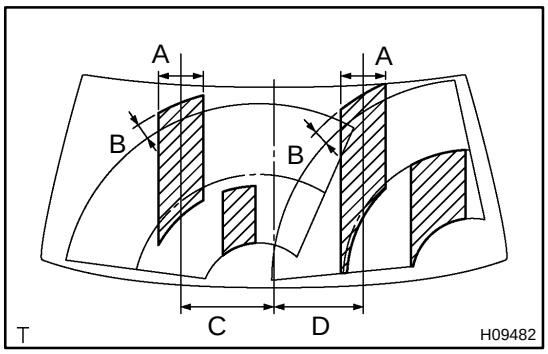

1. INSPECT WASHER NOZZLE

(a) While operating the washer, check whether the upper point where the washer fluid hits the windshield and the surge area are within the range indicated by the hatched line.

A	Approx. 150 mm (5.90 in.)
B	Approx. 50 mm (1.97 in.)
C	Approx. 312.3 mm (12.295 in.)
D	Approx. 299.2 mm (11.780 in.)

(b) Check if the lower point where the washer fluid hits the windshield is within the range of the wiping pattern (the area of the glass which is wiped by the wiper blades).

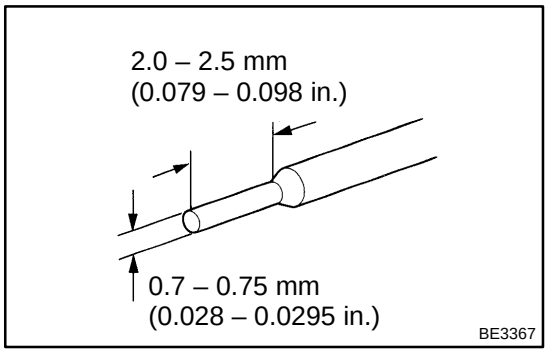

2. ADJUST WASHER NOZZLE

Using a tool like the one shown in the illustration, change the direction of the nozzle hole to adjust the point where washer fluid hits the windshield.

BO2ER–01

INSTALLATION

1. INSTALL WASHER NOZZLES

2. INSTALL WIPER LINK

Install the wiper link through the service hole, then torque the 6 bolts.

Torque: 5.4 N·m (55 kgf·cm, 48 in.·lbf)

3. INSTALL WIPER MOTOR

(a) Install the wiper motor to the wiper link.

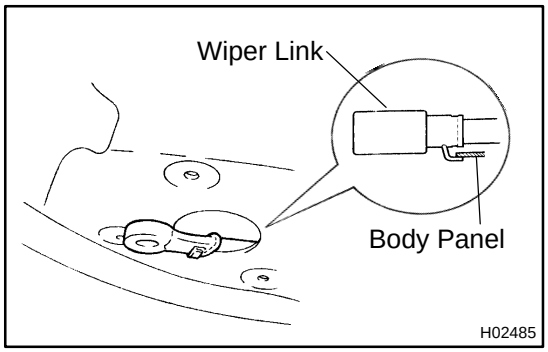

HINT:

When installing the wiper link, connect the claw of wiper link to the panel.

(b) Torque the 4 bolts.

Torque: 5.4 N·m (55 kgf·cm, 48 in.·lbf)

(c) Connect the connector.

4. INSTALL COWL LOUVER

Install the cowl louver with the 8 screws and 6 clips.

5. INSTALL WIPER ARMS

(a) Operate the wipers once and turn the wiper switch OFF.

(b) Install the wiper arms and tighten the nuts by hand.

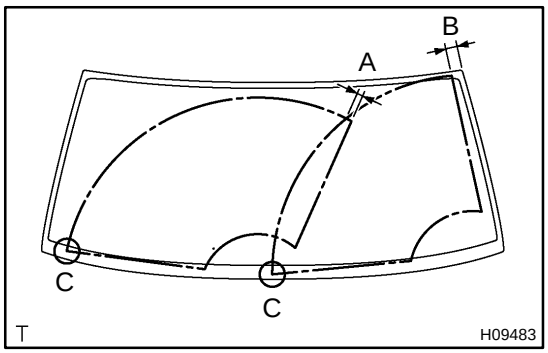

(c) Adjust the installation positions of the wiper arms to the positions shown in the illustration.

A: Approx. 25.7 mm (1.012 in.)

B: Approx. 39.7 mm (1.563 in.)

HINT:

When installing the wiper arms, make sure that the tips of the blades are not beyond the ceramic edge as indicated by ”C” part in the illustration.

(d) Torque the 2 nuts.

Torque: 20 N·m (204 kgf·cm, 15 ft·lbf)

(e) Install the 2 caps.

BODY OUTSIDE MOULDING

BO2ES–02

COMPONENTS

Standard Cab:

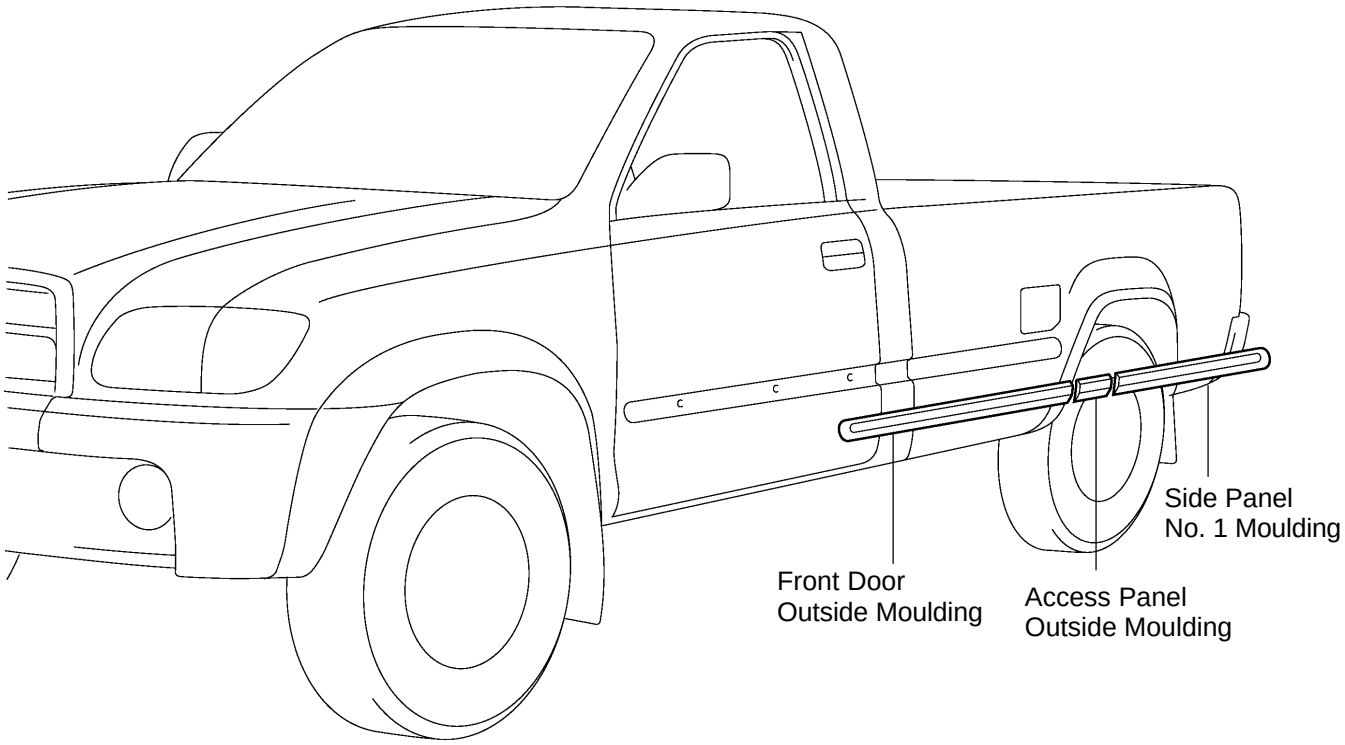

Access cab (Standard body Type), Access Cab (Wide Body Type):

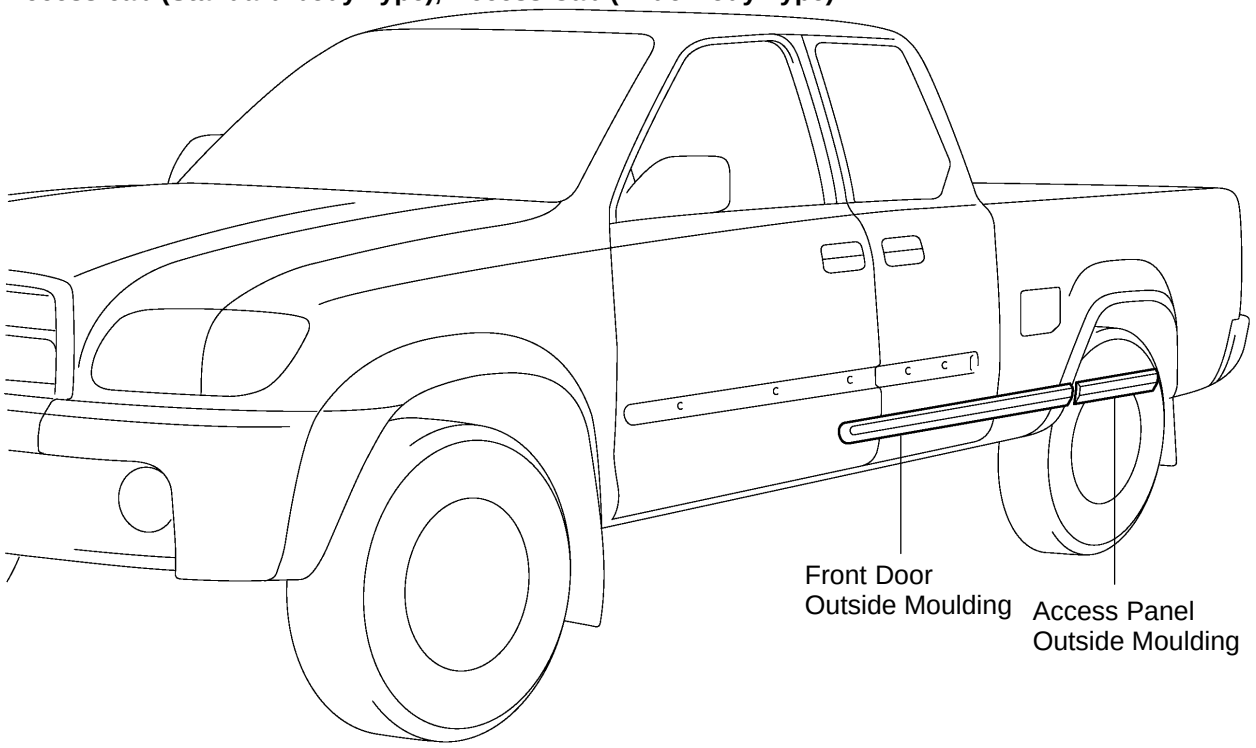

T

H20692

BO2ET–02

REMOVAL

1. HEAT MOULDING

Using a heat light, heat the moulding to 20 – 30 ˚C (68 – 86 ˚F).

NOTICE:

Do not heat the moulding excessively.

2. REMOVE MOULDING

(a) Pass piano wire through between the moulding and body.

(b) Tie both piano wire ends to wooden blocks or similar objects.

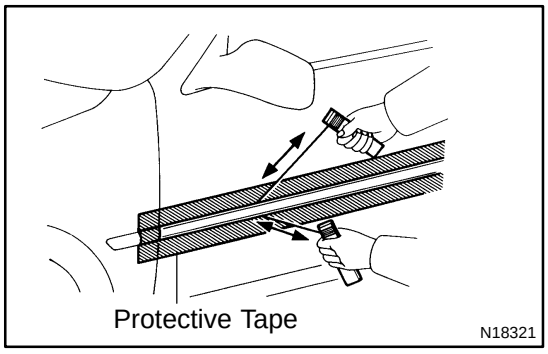

(c) Cut off the adhesive tape by pulling the piano wire as shown in the illustration.

NOTICE:

▲ **Do not damage the body.**

(d) Remove the moulding.

BO4H2–01

INSTALLATION

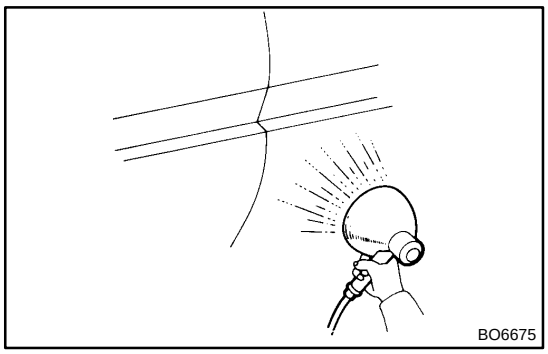
BO6675

1. CLEAN BODY MOUNTING SURFACE

(a) Using a heat light, heat the body mounting surface to 40 – 60 ˚C (104 – 140 ˚F).

NOTICE:

Do not heat the body excessively.

(b) Remove the adhesive tape from the body.

(c) Wipe off the stains with cleaner.

2. INSTALL MOULDING

(a) Using a heat light, heat the body and moulding.

Body: 40 – 60 ˚C (104 – 140 ˚F)

Moulding: 20 – 30 ˚C (68 – 86 ˚F)

NOTICE:

Do not heat the body and moulding excessively.

(b) Remove the moulding release sheet from face of the moulding.

NOTICE:

When removing the moulding release sheet, be careful that dirt or dust will not adhere to the face of the moulding.

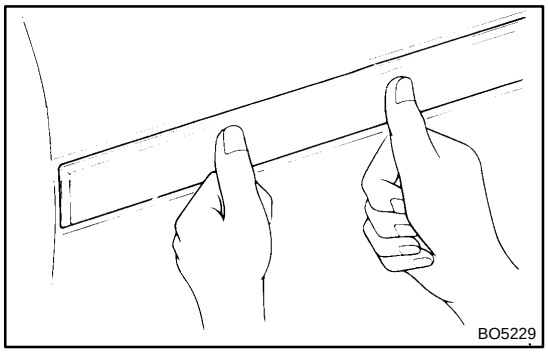
BO5229

(c) Align the bosses with their corresponding holes on the body, and press the moulding firmly.

NOTICE:

Do not apply excessive force onto the moulding, but steady pressure with your thumbs.

WHEEL ARCH MOULDING

COMPONENTS

BO0IF–04

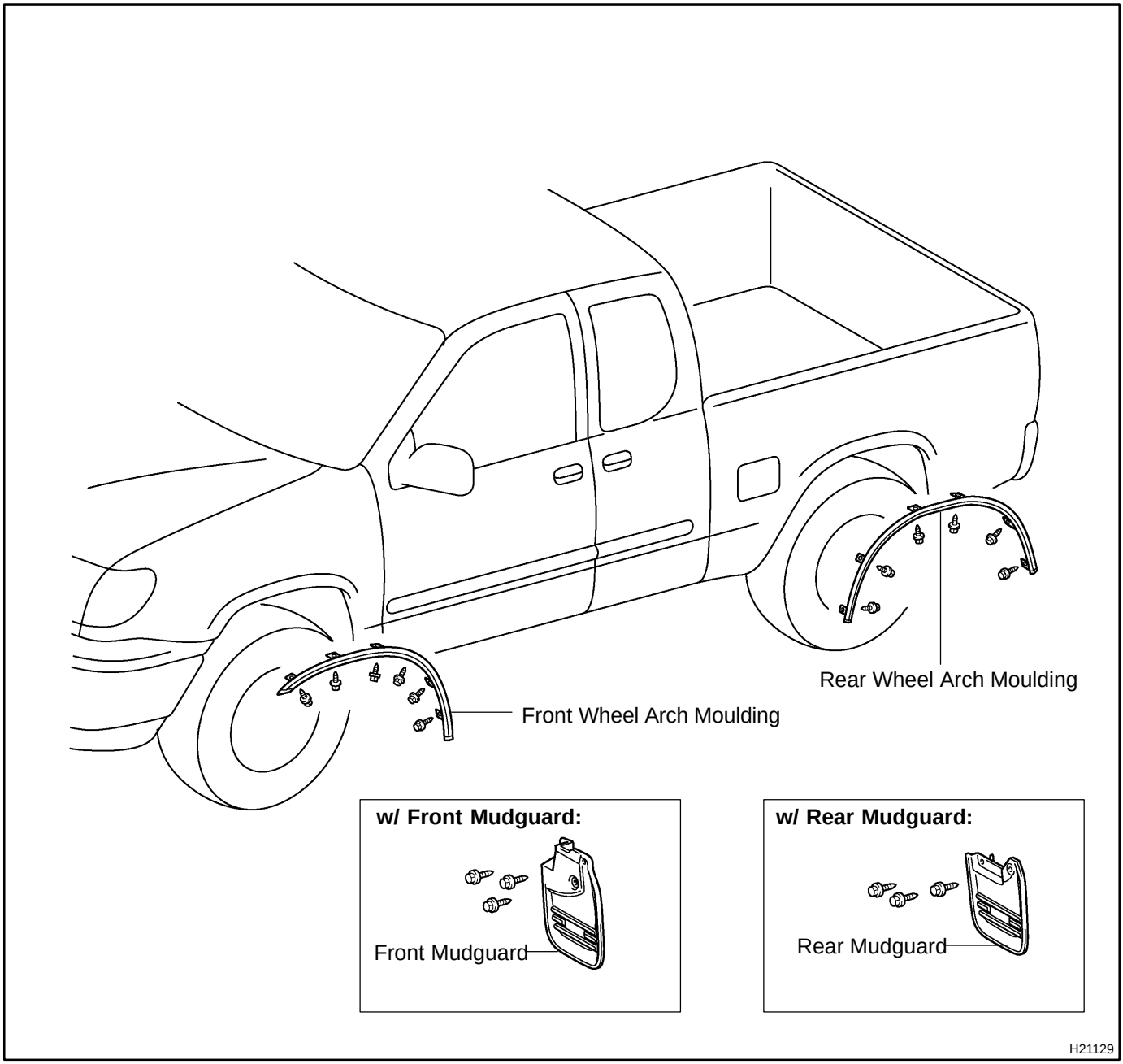

WHEEL OPENING MOULDING

BO2EV–02

COMPONENTS

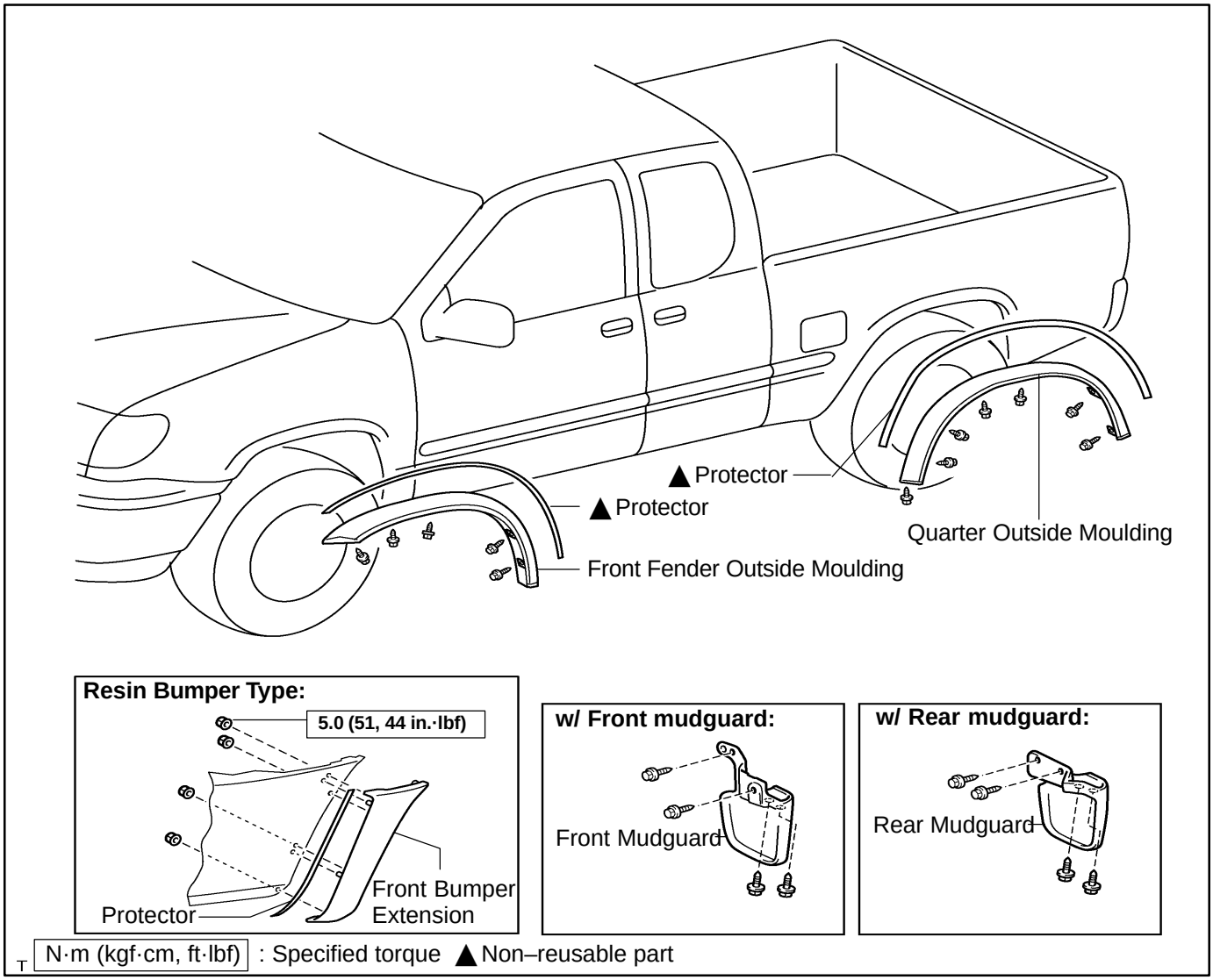

BO4H3–01

REMOVAL

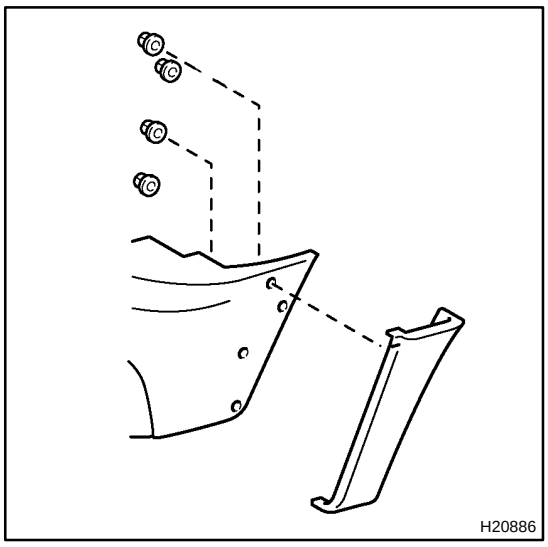

1. Resin bumper type:

REMOVE FRONT BUMPER EXTENSION

Remove the 4 nuts and front bumper extension.

NOTICE:

If the protector are damaged, exchange them for new protector.

2. w/ Front mudguard:

REMOVE FRONT MUDGUARD

Remove the 4 screws and front mudguard.

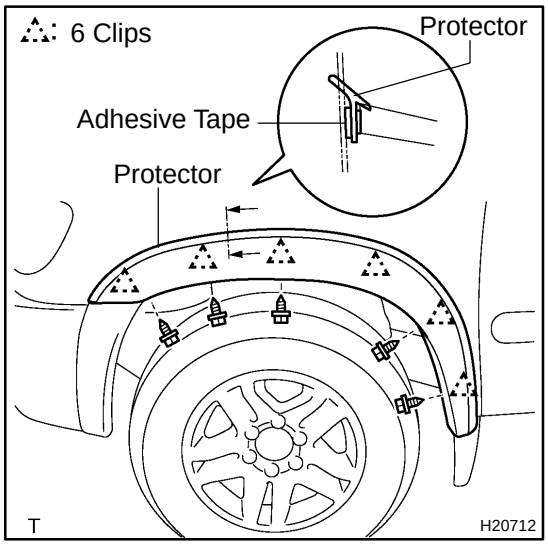

3. REMOVE FRONT FENDER OUTSIDE MOULDING

(a) Remove the 6 screws.

(b) Using a heat light, heat the moulding to 20 – 30˚C (68 – 86˚F).

NOTICE:

Do not heat the moulding excessively.

(c) Cut off the adhesive tape with a knife.

NOTICE:

Do not damage the body.

(d) Remove the moulding.

NOTICE:

If the clips are damaged, exchange them for new clips.

4. w/ Rear mudguard:

REMOVE REAR MUDGUARD

Remove the 4 screws and rear mudguard.

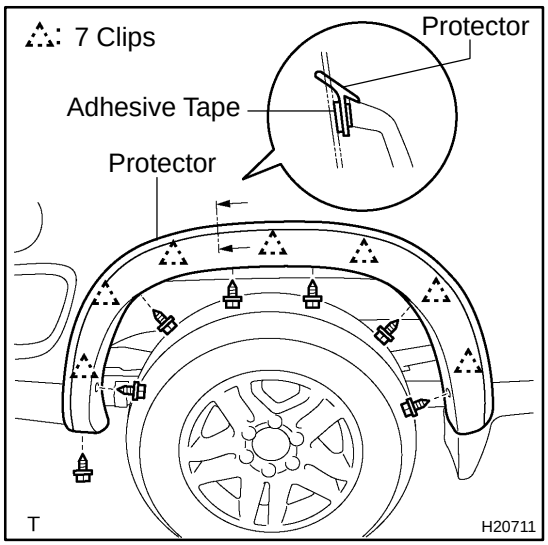

5. REMOVE QUARTER OUTSIDE MOULDING

(a) Remove the 6 screws.

(b) Using a heat light, heat the moulding to 20 – 30˚C (68 – 86˚F).

NOTICE:

Do not heat the moulding excessively.

(c) Cut off the adhesive tape with a knife.

NOTICE:

Do not damage the body.

(d) Remove the moulding.

NOTICE:

If the clips are damaged, exchange them for new clips.

BO4H4–01

INSTALLATION

1. INSTALL QUARTER OUTSIDE MOULDING

(a) Clean the body mounting surface.

(1) Using a heat light, heat the body mounting surface to 40 – 60˚C (104 – 140˚F).

(2) Remove the protector from the body.

(3) Wipe off the stains with cleaner.

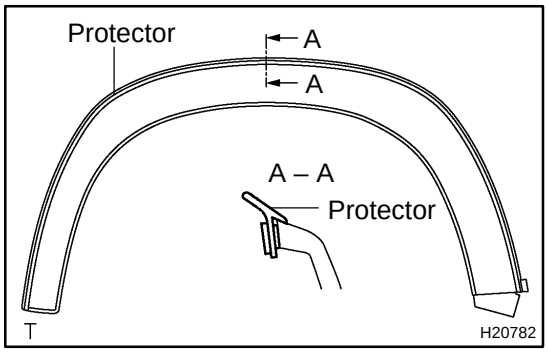

(4) Install a new protector as shown in the illustration.

(b) Install the quarter outside moulding.

(1) Using a heat light, heat the body and moulding.

Body: 40 – 60˚C (104 – 140˚F)

Moulding: 20 – 30˚C (68 – 86˚F)

NOTICE:

Do not heat the body and moulding excessively.

(2) Remove the moulding release sheet from the face of the moulding.

NOTICE:

When removing the moulding release sheet, be careful that dirt or dust will not adhere to the face of the moulding.

(3) Align the bosses with their corresponding holes on the body and press the moulding firmly.

NOTICE:

Do not apply excessive force onto the moulding, but steady pressure with your thumbs.

(4) Install the 6 screws.

2. w/ Rear mudguard:

INSTALL REAR MUDGUARD

Install the rear mudguard with the 4 screws.

3. INSTALL FRONT FENDER OUTSIDE MOULDING

(a) Clean the body mounting surface.

(1) Using a heat light, heat the body mounting surface to 40 – 60˚C (104 – 140˚F).

(2) Remove the protector from the body.

(3) Wipe off the stains with cleaner.

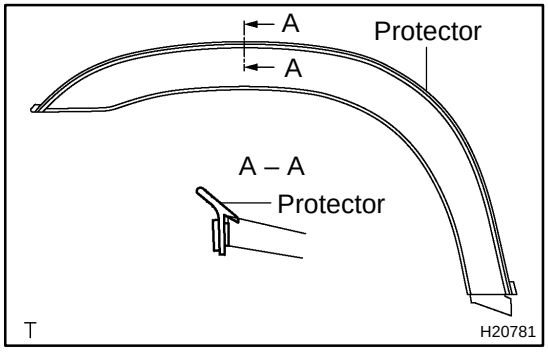

(4) Install a new protector as shown in the illustration.

(b) Install the front fender outside moulding.

(1) Using a heat light, heat the body and moulding.

Body: 40 – 60˚C (104 – 140˚F)

Moulding: 20 – 30˚C (68 – 86˚F)

NOTICE:

Do not heat the body and moulding excessively.

(2) Remove the moulding release sheet from the face of the moulding.

NOTICE:

When removing the moulding release sheet, be careful that dirt or dust will not adhere to the face of the moulding.

(3) Align the bosses with their corresponding holes on the body, and press the moulding firmly.

NOTICE:

Do not apply excessive force onto the moulding, but steady pressure with your thumbs.

(4) Install the 6 screws.

4. w/ Rear mudguard:

INSTALL FRONT MUDGUARD

Install the front mudguard with the 4 screws.

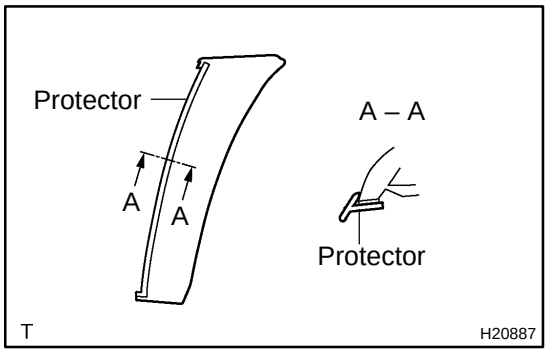

5. Resin bumper type:

INSTALL FRONT BUMPER EXTENSION

(a) Install the new protector as shown in the illustration.

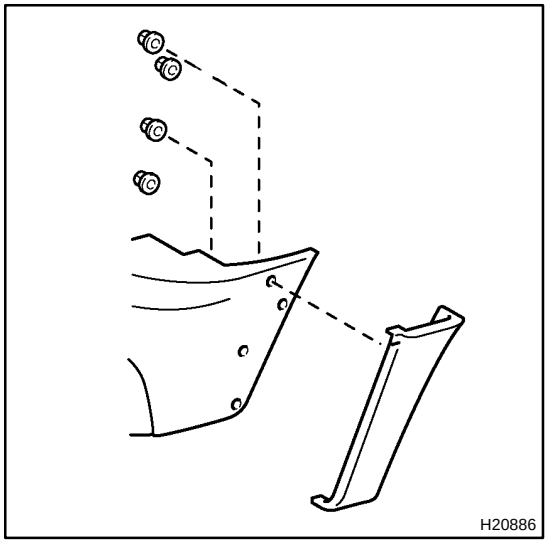

(b) Install the front bumper extension with the 4 nuts.

Torque: 5.0 N·m (51 kgf·cm, 44 in.·lbf)

ROOF DRIP SIDE FINISH MOULDING

BO0IL–03

COMPONENTS

Standard cab:

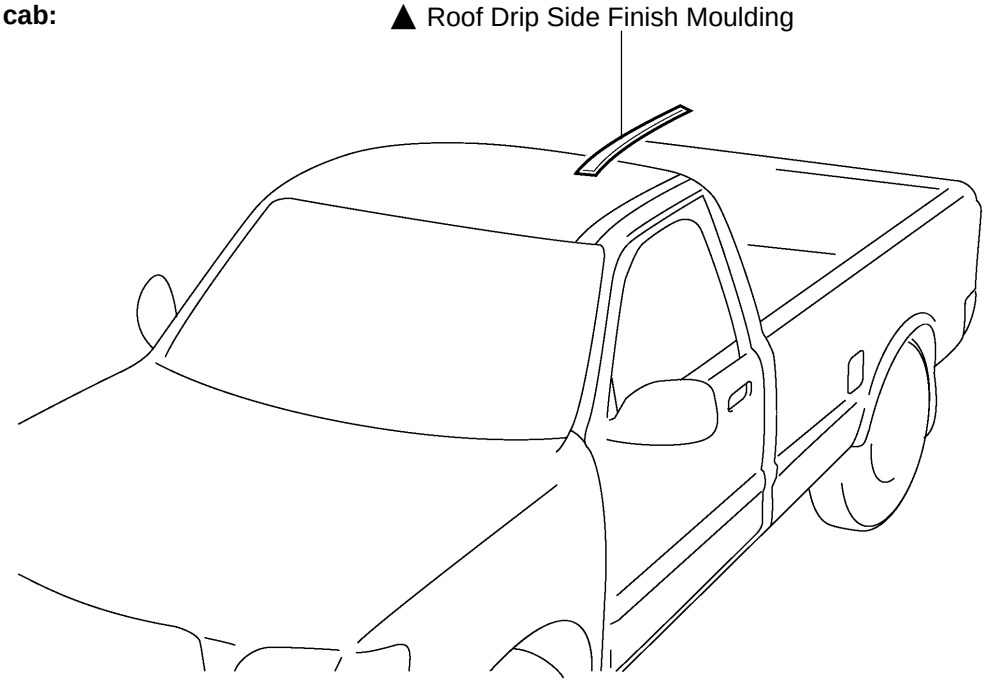

Access cab:

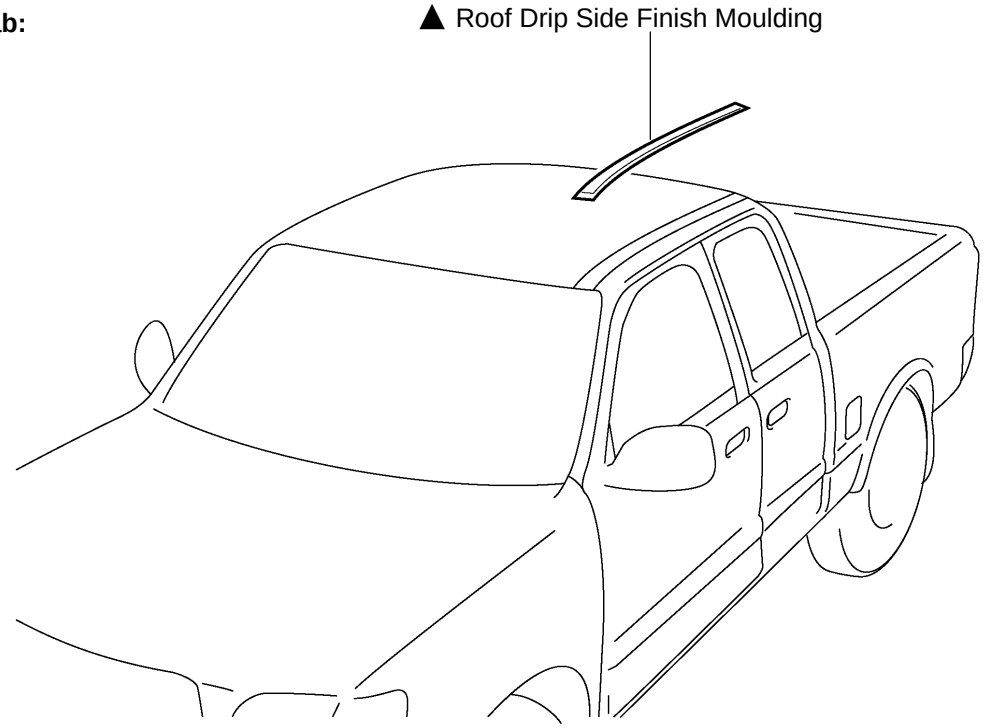

T ▲ Non–reusable part

H11362

BO2EY–01

REMOVAL

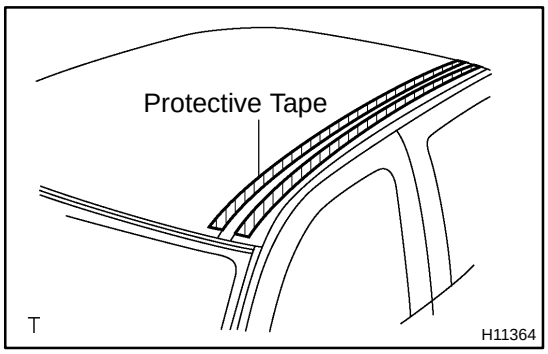

1. REMOVE ENDS OF MOULDING

(a) Apply protective tape to the outer surface as shown in illustration, to keep the surface from being scratched.

(b) Using a heat light, heat the moulding to 20 – 30 °C (68 – 86 °F).

NOTICE:

Do not heat the moulding excessively.

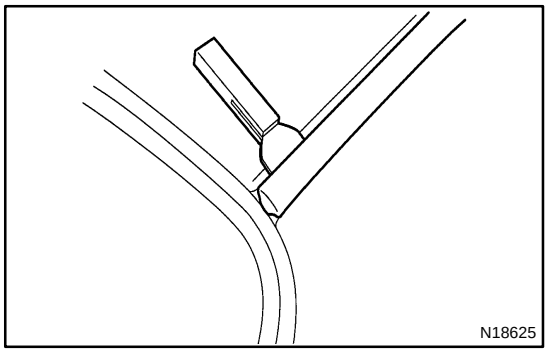

(c) Using a scraper, pull off the roof drip side finish moulding from front end and rear end.

HINT:

Tape the scraper tip before use.

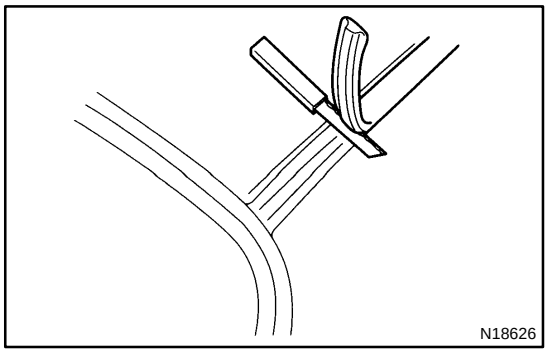

2. REMOVE MOULDING AND ADHESIVE

(a) Pull off the moulding by cutting the adhesive with a knife.

(b) Remove the moulding

NOTICE:

Do not damage the body with the knife.

BO2EZ–01

INSTALLATION

1. CLEAN CONTACT SURFACE OF BODY

(a) Using a heat light, heat the body surface 40 – 60 °C (104 – 140 °F).

NOTICE:

Do not heat the body excessively.

(b) Using a knife, cut away any rough areas on the body.

NOTICE:

Be careful not to damage the body.

(c) Wipe off stains with cleaner.

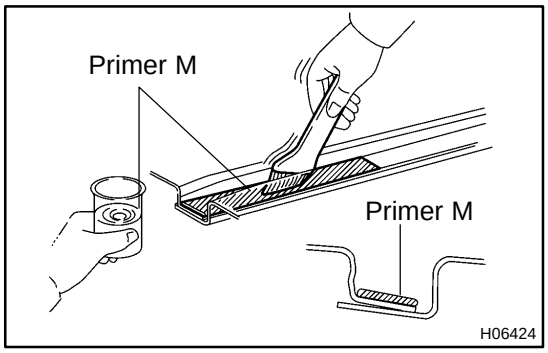

2. COAT CONTACT SURFACE OF BODY WITH PRIMER "M"

Using a brush, coat the body surface except the front and rear end with Primer M as shown in the illustration.

Front end: 23 mm (0.91 in.) + 8 mm (0.31 in.) or less
Rear end: 70 mm (2.76 in.) + 12 mm (0.47 in.) or less

NOTICE:

- **Let the primer coating dry for 3 minutes or more.**
- **Do not coat to the adhesive.**
- **Do not keep any of the opened Primer M for later use.**

3. INSTALL NEW MOULDING

(a) Using a heat light, heat the body and moulding.

Body: 40 – 60 °C (104 – 140 °F)
Moulding: 20 – 30 °C (68 – 86 °F)

NOTICE:

Do not heat the moulding excessively.

(b) Lift the moulding release sheet from face of the moulding.

NOTICE:

When the moulding release sheet is removed, make sure that no dirt or dust con get onto the uncoated area.

(c) Install the moulding.

DECK TOP PROTECTOR

BO4H6–01

COMPONENTS

Access cab (Standard Body Type), Standard cab:

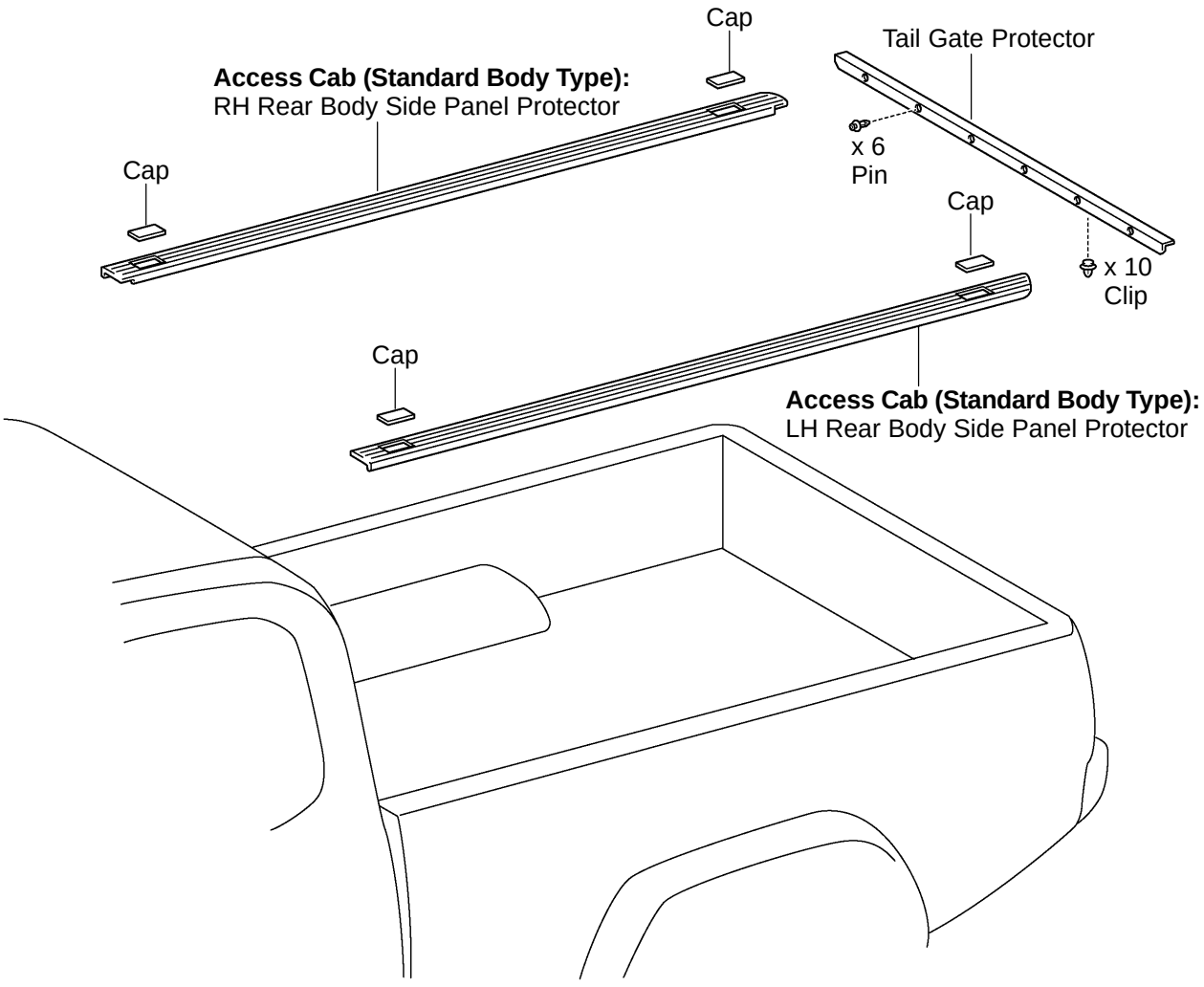

T

H15019

Access cab (Wide Body Type):

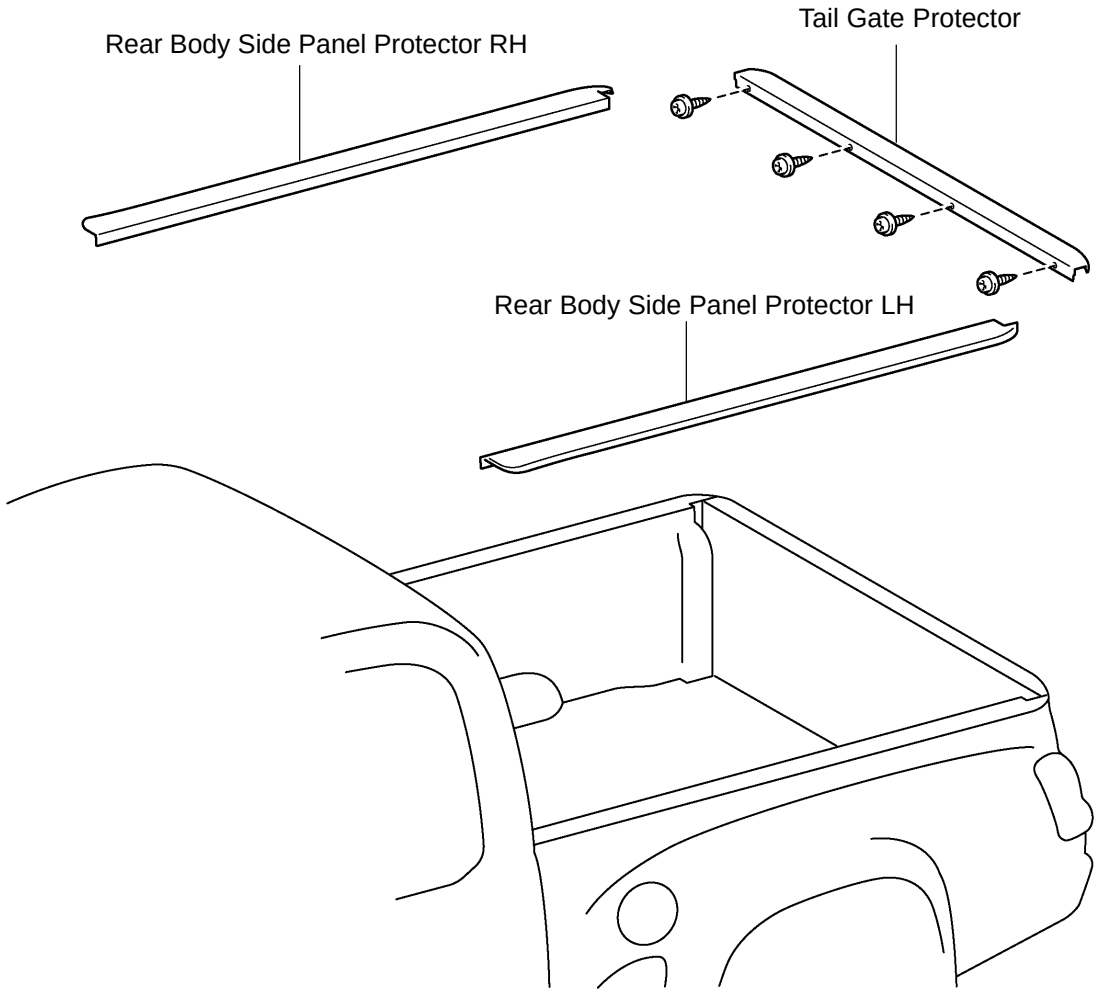

T

H20693

BO4H7–01

REMOVAL

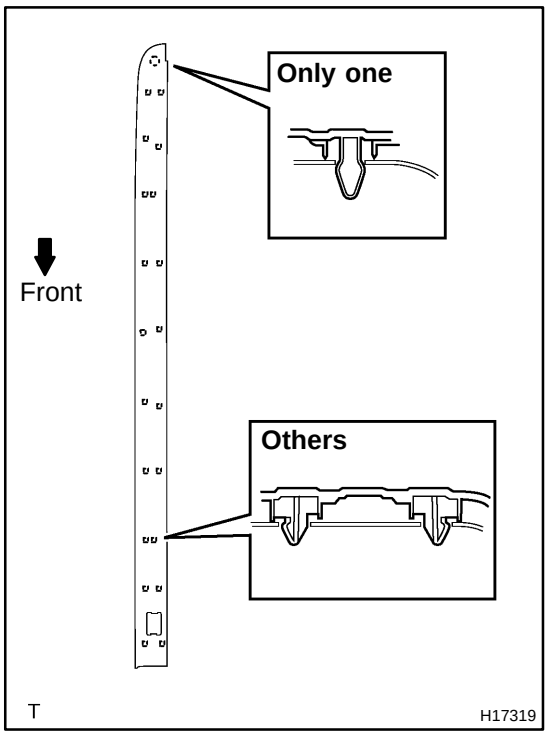

1. Access cab (Standard Body Type):
REMOVE REAR BODY SIDE PANEL PROTECTOR

Using a moulding remover, remove the 2 protectors.

NOTICE:

- **Each protector has 21 clips as shown in the illustration.**
- **Be careful not to damage the clips.**

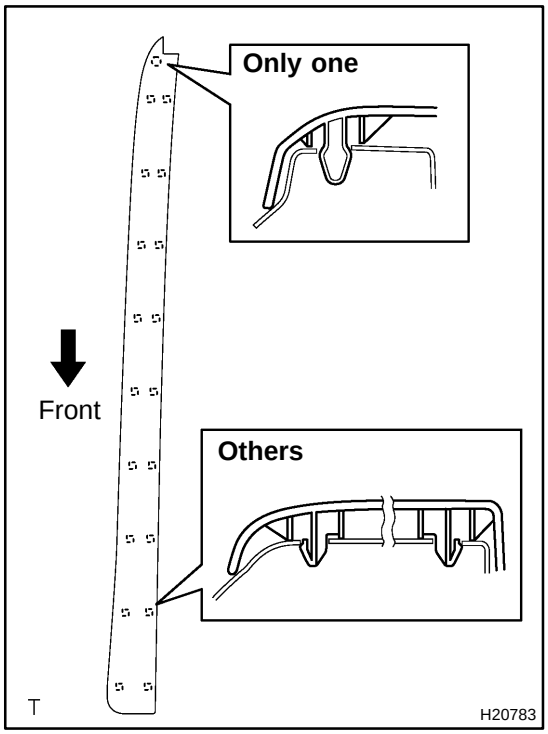

2. Access cab (Wide Body Type):
REMOVE REAR BODY SIDE PANEL PROTECTOR

Using a moulding remover, remove the 2 protectors.

NOTICE:

- **Each protector has 19 clips as shown in the illustration.**
- **Be careful not to damage the clips.**

3. Access cab (Standard Body Type), Standard cab:
REMOVE TAIL GATE PROTECTOR

(a) Remove the 6 pins.

(b) Using a clip remover, remove the protector and 10 clips.

4. Access cab (Wide Body Type) only:
REMOVE TAIL GATE PROTECTOR

(a) Using a torx socket wrench (T30), remove the 4 screws.

(b) Using a moulding remover, remove the protector and 8 clips.

BO40O–02

INSTALLATION

The installation is in the reverse order of the removal procedure (See page BO–46).

WINDSHIELD

COMPONENTS

BO0IO–03

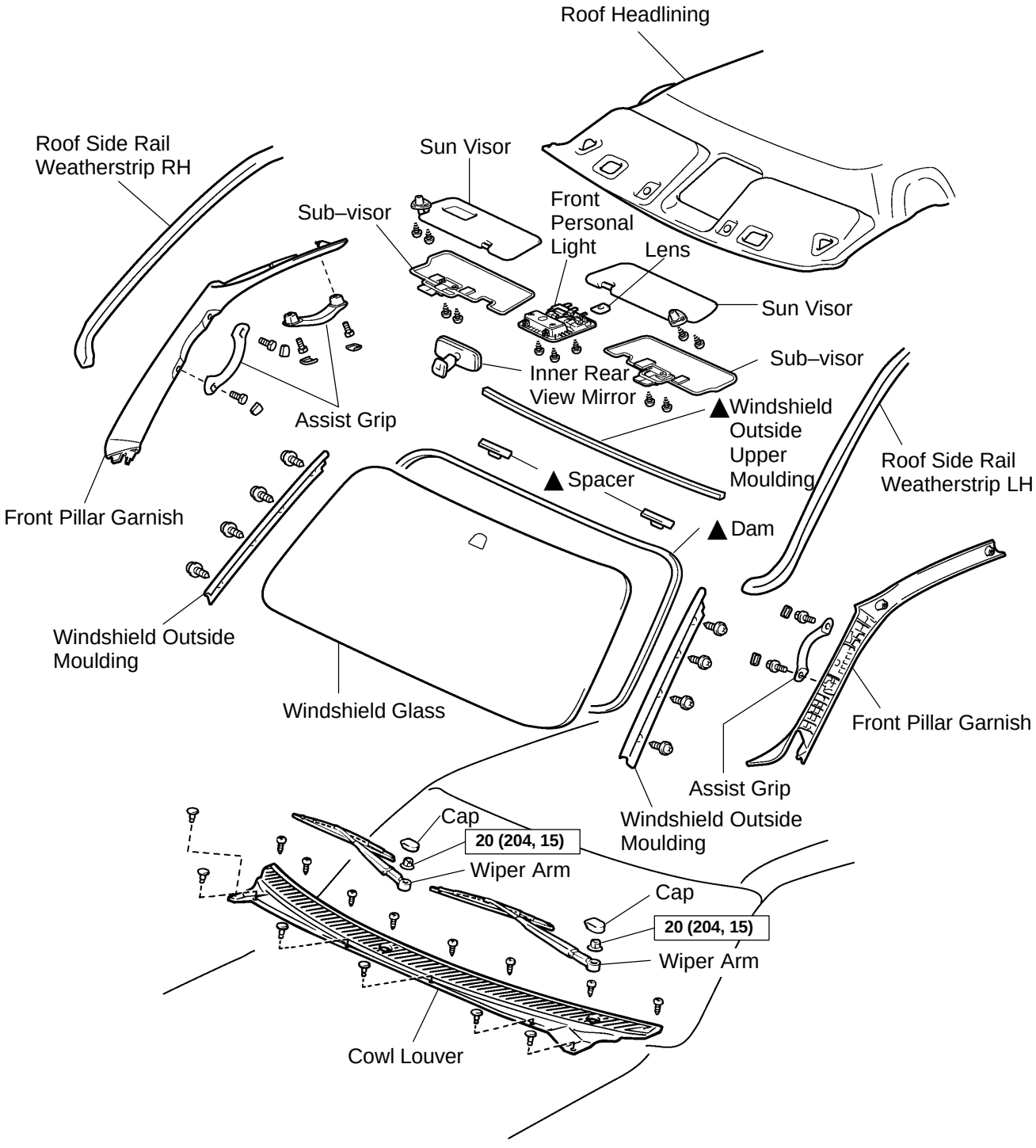

N·m (kgf·cm, ft·lbf) : Specified torque

T ▲ Non–reusable part

H11397

BO2F0–01

REMOVAL

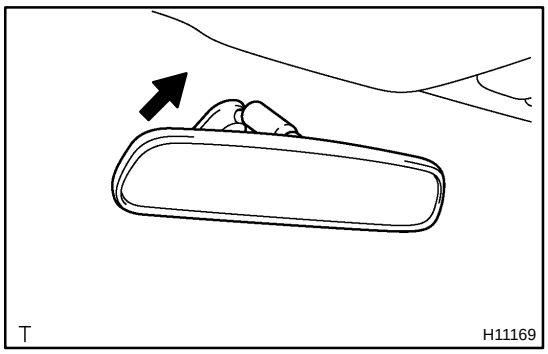

1. REMOVE INNER REAR VIEW MIRROR

Remove the inner rear view mirror as shown in the illustration.

2. REMOVE ASSIST GRIPS

(a) Using a screwdriver, remove the caps.

HINT:

Tape the screwdriver tip before use.

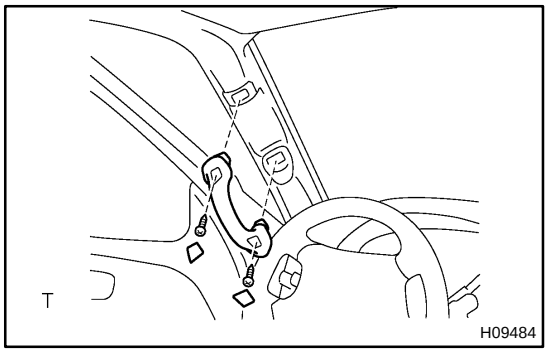

(b) Driver's side:

Using a torx driver, remove the 2 torx screws and assist grip.

Torx driver: T30 (Part No.09041–00030 or locally manufactured tool)

(c) Passenger's side:

Using a torx driver, remove the 4 torx screws and 2 assist grips.

Torx driver: T30 (Part No.09041–00030 or locally manufactured tool)

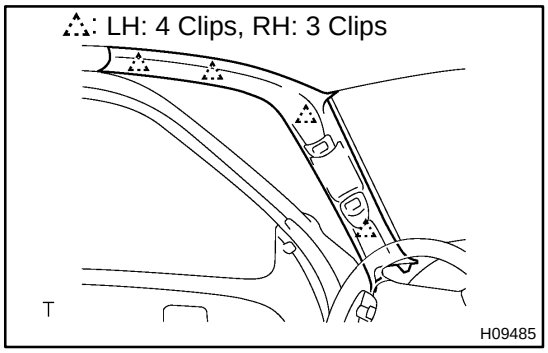

3. REMOVE FRONT PILLAR GARNISH

(a) Using a screwdriver, remove the front pillar garnish.

HINT:

Tape the screwdriver tip before use.

(b) Employ the same manner described above to the other side.

4. REMOVE SUN VISORS

(a) Remove the 4 screws and 2 sun visors.

(b) w/ Light:

Disconnect the connector.

5. REMOVE SUB–VISORS

Remove the 4 screws and 2 sub–visors.

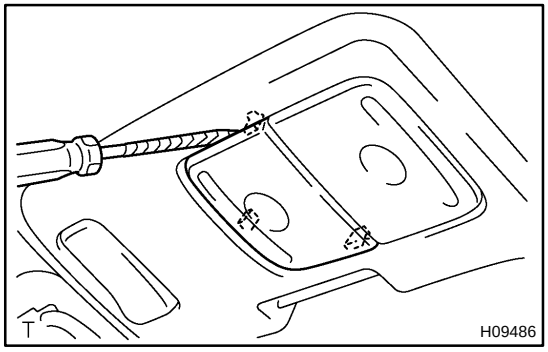

6. REMOVE FRONT PERSONAL LIGHT

(a) Using a screwdriver, remove the left side lens.

HINT:

Tape the screwdriver tip before use.

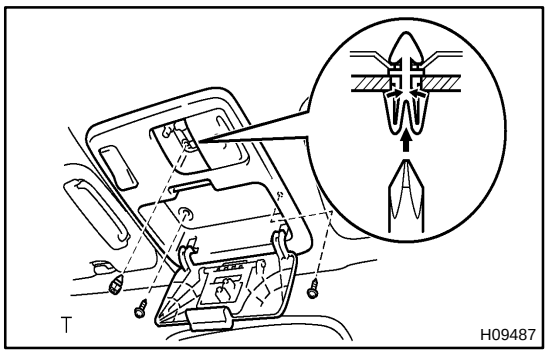

(b) Remove the 2 screws.

(c) Using a screwdriver, rotate the clip by 90° and remove it.

HINT:

Tape the screwdriver tip before use.

(d) Remove the front personal light, then disconnect the connector.

7. REMOVE SUN VISOR HOLDERS

Remove the 2 screws and 2 sun visor holders.

8. REMOVE FRONT PART OF ROOF HEADLINING

9. REMOVE WIPER ARMS

(a) Using a screwdriver, remove the 2 caps.

HINT:

Tape the screwdriver tip before use.

(b) Remove the 2 nuts and wiper arms.

10. REMOVE COWL LOUVER

Remove the 8 screws, 6 clips and cowl louver.

11. REMOVE FRONT PART OF ROOF SIDE RAIL WEATHERSTRIP LH AND RH

Pull the front part of roof side rail weatherstrip LH and RH to remove it.

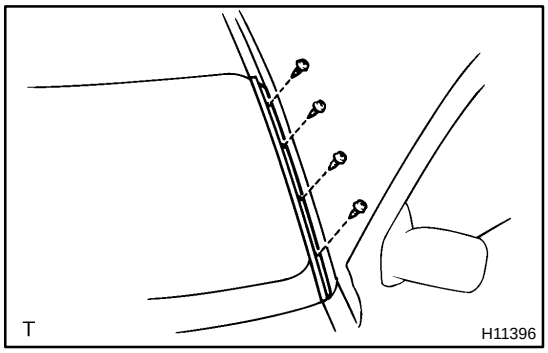

12. REMOVE WINDSHIELD OUTSIDE MOULDING

(a) Remove the 4 screws and windshield outside moulding.

(b) Employ the same manner described above to the other side.

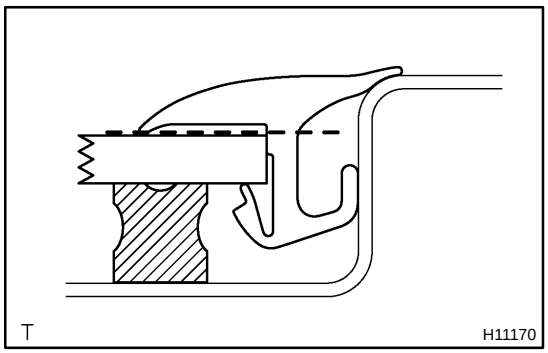

13. REMOVE WINDSHIELD OUTSIDE UPPER MOULDING

(a) Using a knife, cut off the moulding as shown in the illustration.

NOTICE:

Do not damage the body with the knife.

(b) Remove the remaining moulding.

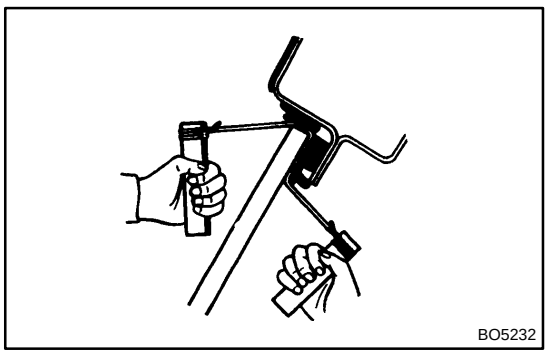

14. REMOVE WINDSHIELD GLASS

(a) Push piano wire through between the body and glass from the interior.

(b) Tie both wire ends to wooden blocks or similar objects.

HINT:

Apply protective tape to the outer surface to keep the surface from being scratched.

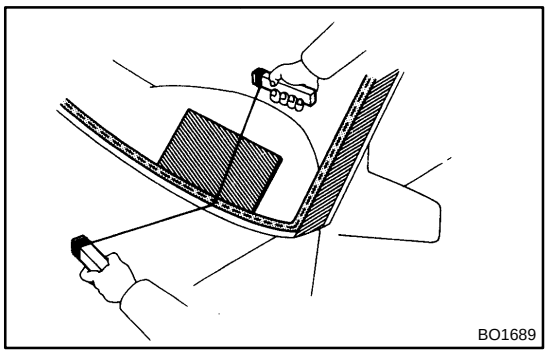

NOTICE:

When separating the glass, take care not to damage the paint and exterior ornaments. To prevent scratching the safety pad when removing the windshield, place a plastic sheet between the piano wire and safety pad.

(c) Cut the adhesive by pulling the piano wire around it.

(d) Remove the glass.

NOTICE:

Leave as much of the adhesive on the body as possible when cutting off the glass.

BO2F1–01

INSTALLATION

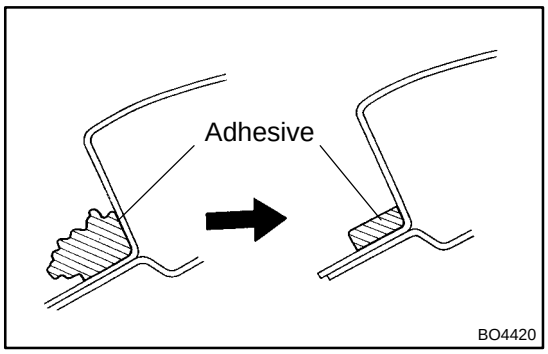

1. CLEAN AND SHAPE CONTACT SURFACE OF BODY

(a) Using a knife, cut away any rough areas on the body.

HINT:

Leave as much of the adhesive on the body as possible.

(b) Clean the cutting surface of the adhesive with a shop rag saturated in cleaner.

HINT:

Even if all the adhesive has been removed, clean the body.

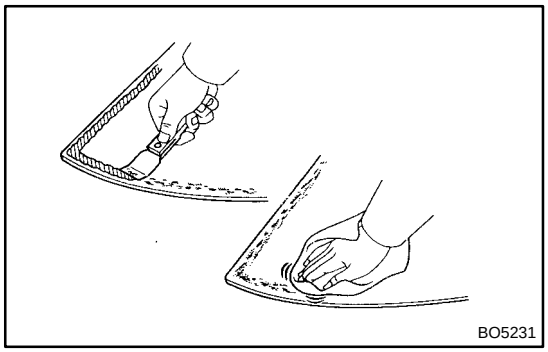

2. CLEAN REMOVED GLASS

(a) Remove the damaged stoppers and dam.

(b) Using a scraper, remove the adhesive sticking to the glass.

(c) Clean the glass with cleaner.

NOTICE:

Do not touch the glass after cleaning it.

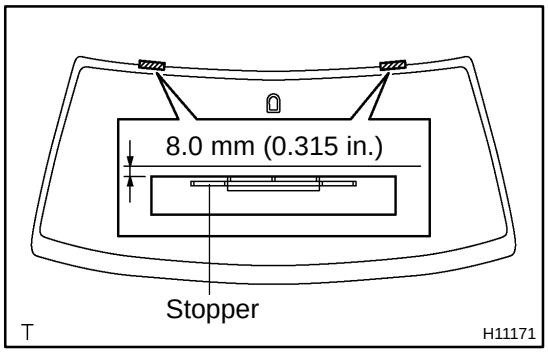

3. INSTALL NEW STOPPERS

Attach new stoppers to the glass with the ceramic notches on the glass aligned with the stoppers as shown in the illustration.

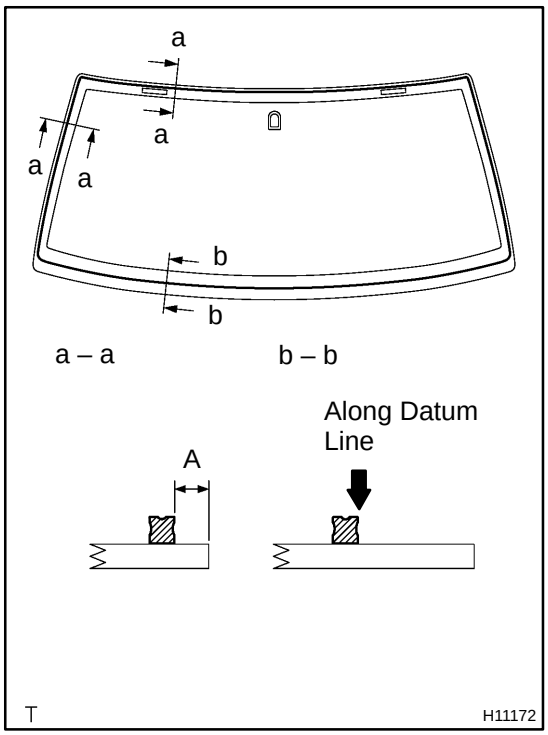

4. INSTALL NEW DAM

Install a new dam with double–stick tape as shown in the illustration.

A: 7.0 mm (0.276 in.)

NOTICE:

Do not touch the glass surface after cleaning it.

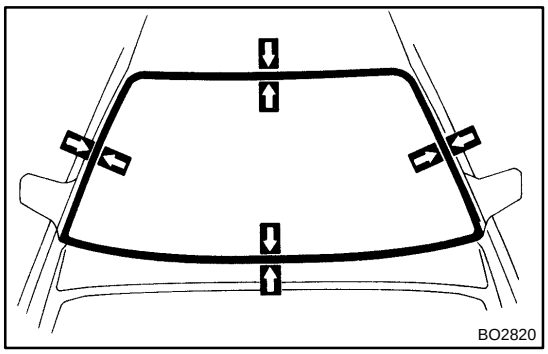

5. POSITION GLASS

(a) Place the glass in the correct position.
(b) Check that all contacting parts of the glass rim are perfectly even.
(c) Place reference marks between the glass and body.
(d) Remove the glass.

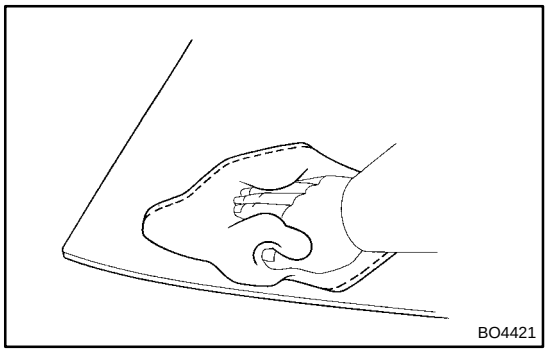

6. CLEAN CONTACT SURFACE OF GLASS

Using a cleaner, clean the contact surface which is black–colored area around the entire glass rim.

NOTICE:

Do not touch the glass face after cleaning it.

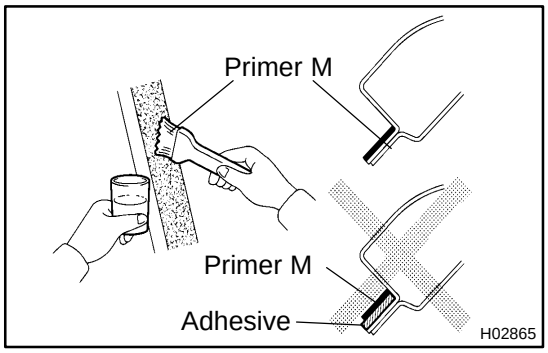

7. COAT CONTACT SURFACE OF BODY WITH PRIMER "M"

Using a brush, coat Primer M to the exposed part of body on the vehicle side.

NOTICE:

- **Let the primer coating dry for 3 minutes or more.**
- **Do not coat Primer M to the adhesive.**
- **Do not keep any of the opened Primer M for later use.**

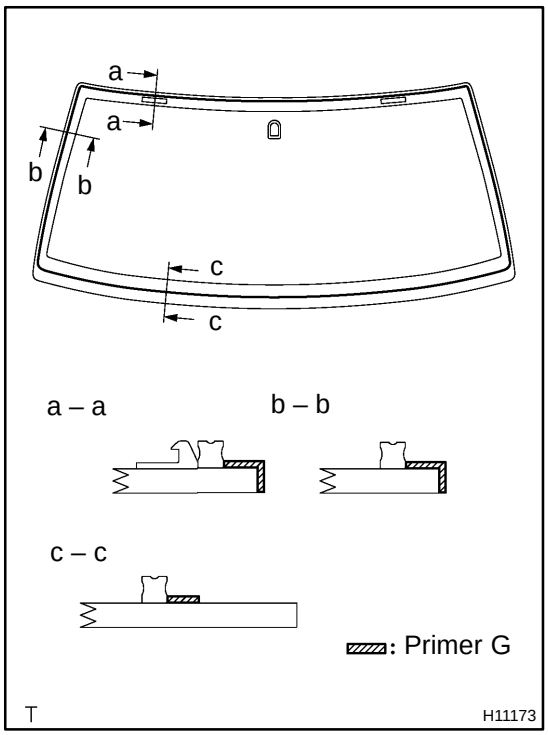

8. COAT CONTACT SURFACE OF GLASS WITH PRIMER "G"

(a) Using a brush or sponge, coat the edge of the glass and the contact surface with Primer G.
(b) When the primer is coated wrongly to the area other than the specified, wipe it off with a clean shop rag before the primer dries.

NOTICE:

- **Let the primer coating dry for 3 minutes or more.**
- **Do not keep any of the opened Primer G for later use.**

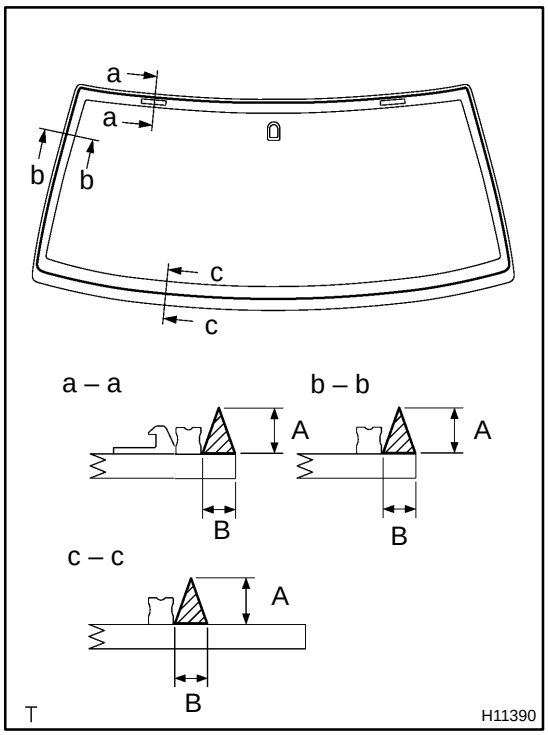

9. APPLY ADHESIVE

(a) Cut off the tip of the cartridge nozzle.
Part No. 08850–00801 or equivalent

HINT:

After cutting off the tip, use all adhesive within the time described in the table below.

Temperature	Tackfree time
35 ˚C (95 ˚F)	15 minutes
20 ˚C (68 ˚F)	100 minutes
5 ˚C (41 ˚F)	8 hours

(b) Load the cartridge into the sealer gun.

(c) Coat the glass with adhesive as shown in the illustration.
A: 12 mm (0.47 in.)
B: 8 mm (0.31 in.)

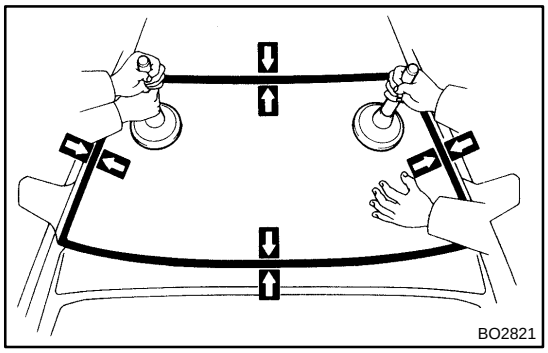

10. INSTALL WINDSHIELD GLASS AND MOULDING

(a) Install the glass, aligning the reference marks using a suction rubber.

HINT:

Check that stoppers engage correctly viewing.

(b) Lightly press the glass front surface for close contact.

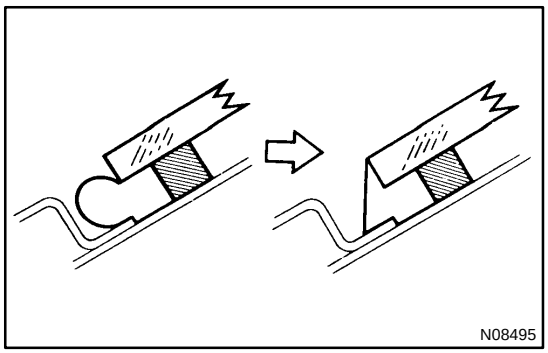

(c) Correct insufficient or protruded adhesive agent using a spatula.

HINT:

Apply the adhesive agent up to the windshield glass edge.

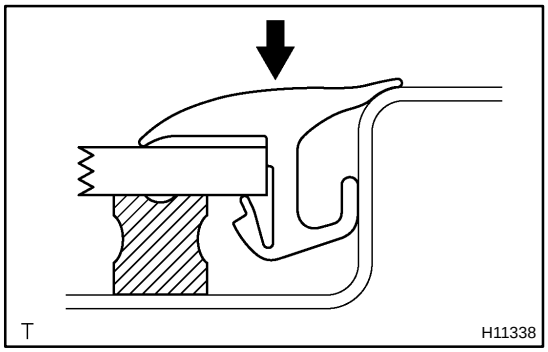

(d) Install a new windshield outside upper moulding to the windshield glass before the adhesive agent hardens.

(e) Using a scraper, remove any excessive adhesive agent before it hardens.

(f) Hold the glass and moulding in place securely with a protective tape or equivalent until the adhesive hardened.

NOTICE:
Take care not to drive the vehicle during the time described in the table below.

Temperature	Minimum time prior to drive of the vehicle
35 ˚C (95 ˚F)	1.5 hours
20 ˚C (68 ˚F)	5 hours
5 ˚C (41 ˚F)	24 hours

11. INSPECT FOR LEAKAGE AND REPAIR
NOTICE:
Conduct a leak test after the hardening time has elapsed.

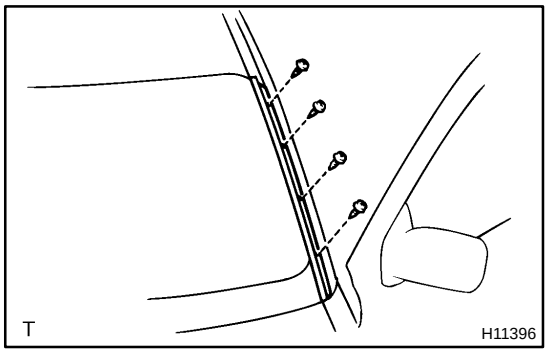

12. INSTALL WINDSHIELD OUTSIDE MOULDING
(a) Install the 4 screws and windshield outside moulding.
(b) Employ the same manner described above to the other side.

13. INSTALL FRONT PART OF ROOF SIDE RAIL WEATHERSTRIP LH AND RH
Install the front part of roof side rail weatherstrip LH and RH.

14. INSTALL COWL LOUVER
Install the cowl louver with the 8 screws and 6 clips.

15. INSTALL WIPER ARMS
(a) Operate the wipers once and turn the wiper switch OFF.
(b) Install the wiper arms and tighten the nuts by hand.

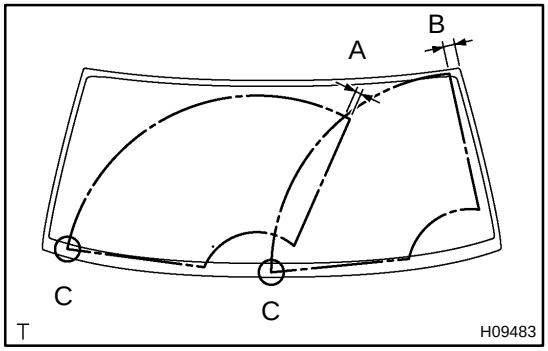

(c) Adjust the installation positions of the wiper arms to the positions shown in the illustration.
A: Approx. 25.7 mm (1.012 in.)
B: Approx. 39.7 mm (1.563 in.)

HINT:
When installing wiper arms, make sure that the tips of the blades are not beyond the ceramic edge as indicated by ”C” part in the illustration.

(d) Torque the nuts.
Torque: 20 N·m (204 kgf·cm, 15 ft·lbf)
(e) Install the caps.

16. INSTALL FRONT PART OF ROOF HEADLINING

17. INSTALL SUN VISOR HOLDERS

Install the 2 sun visor holders with the 2 screws.

18. INSTALL FRONT PERSONAL LIGHT

(a) Connect the connector, then install the front personal light.
(b) Install the 2 screws and the clip.

HINT:
When installing the front personal light, attach the clip to the housing and push it to the bracket.

(c) Install the left side lens.

19. INSTALL SUB–VISORS

Install the 2 sub–visors with the 4 screws.

20. INSTALL SUN VISORS

(a) w/ Light:
Connect the connector.
(b) Install the 2 sun visors with the 4 screws.

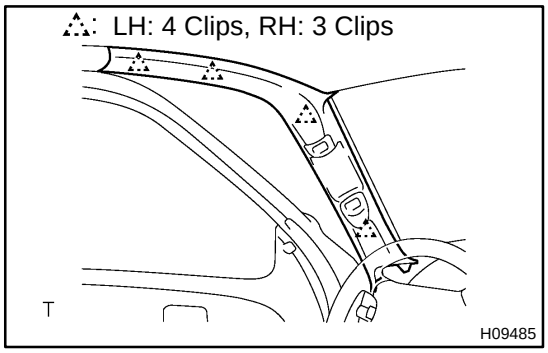

21. INSTALL FRONT PILLAR GARNISH

(a) Install the front pillar garnish.
(b) Employ the same manner described above to the other side.

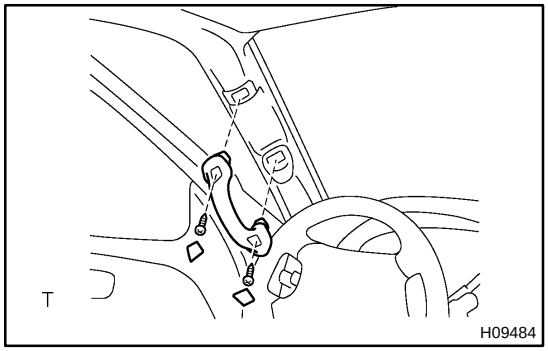

22. INSTALL ASSIST GRIPS

(a) Driver's side:
Using a torx socket wrench, install the assist grip with the 2 torx screws.
Torx driver: T30 (Part No. 09041–00030 or locally manufactured tool)
(b) Passenger's side:
Using a torx socket wrench, install the 2 assist grips with the 4 torx screws.
Torx driver: T30 (Part No. 09041–00030 or locally manufactured tool)
(c) Install the caps.

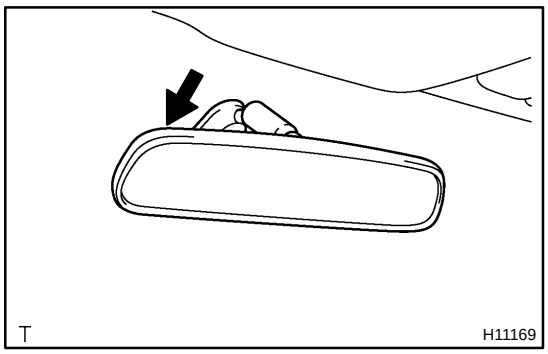

23. INSTALL INNER REAR VIEW MIRROR

Install the inner rear view mirror as shown in the illustration.

BACK WINDOW GLASS

COMPONENTS

BO4H8–01

Fixed type:

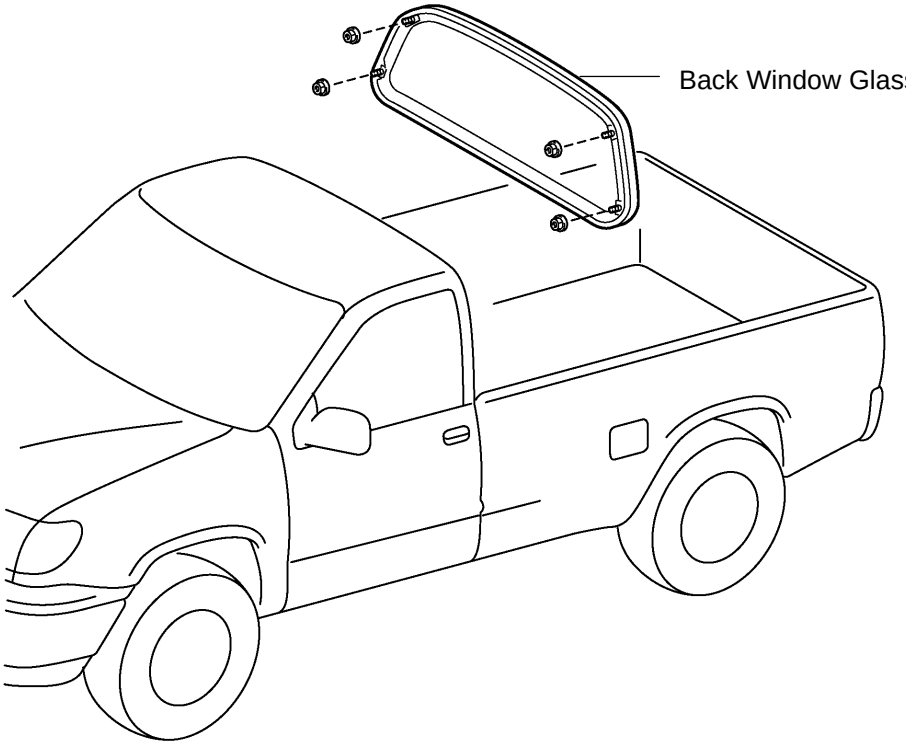

Slide type:

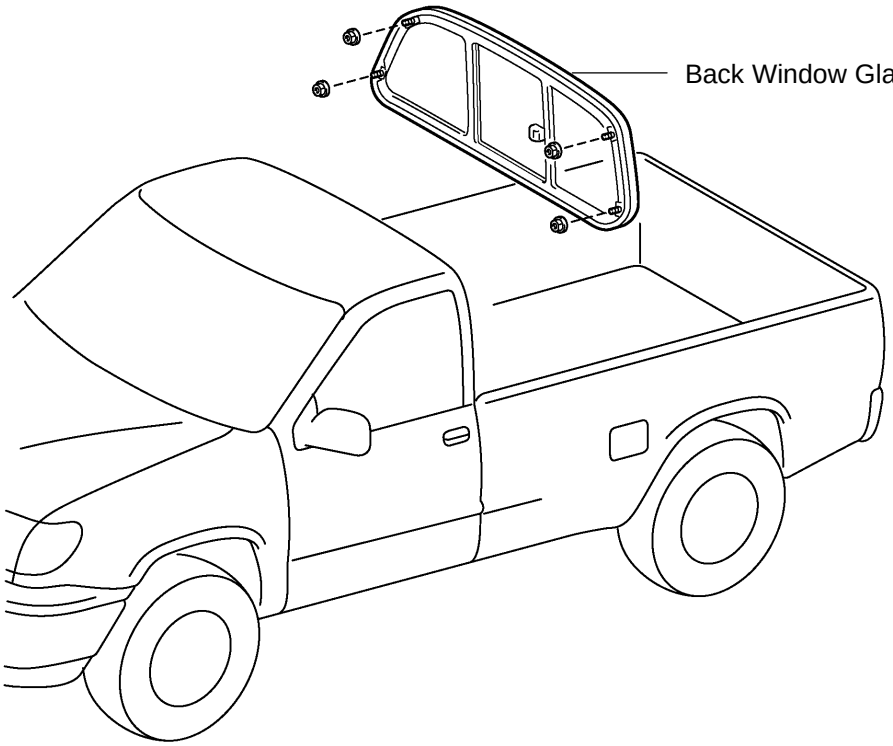

T

H11406

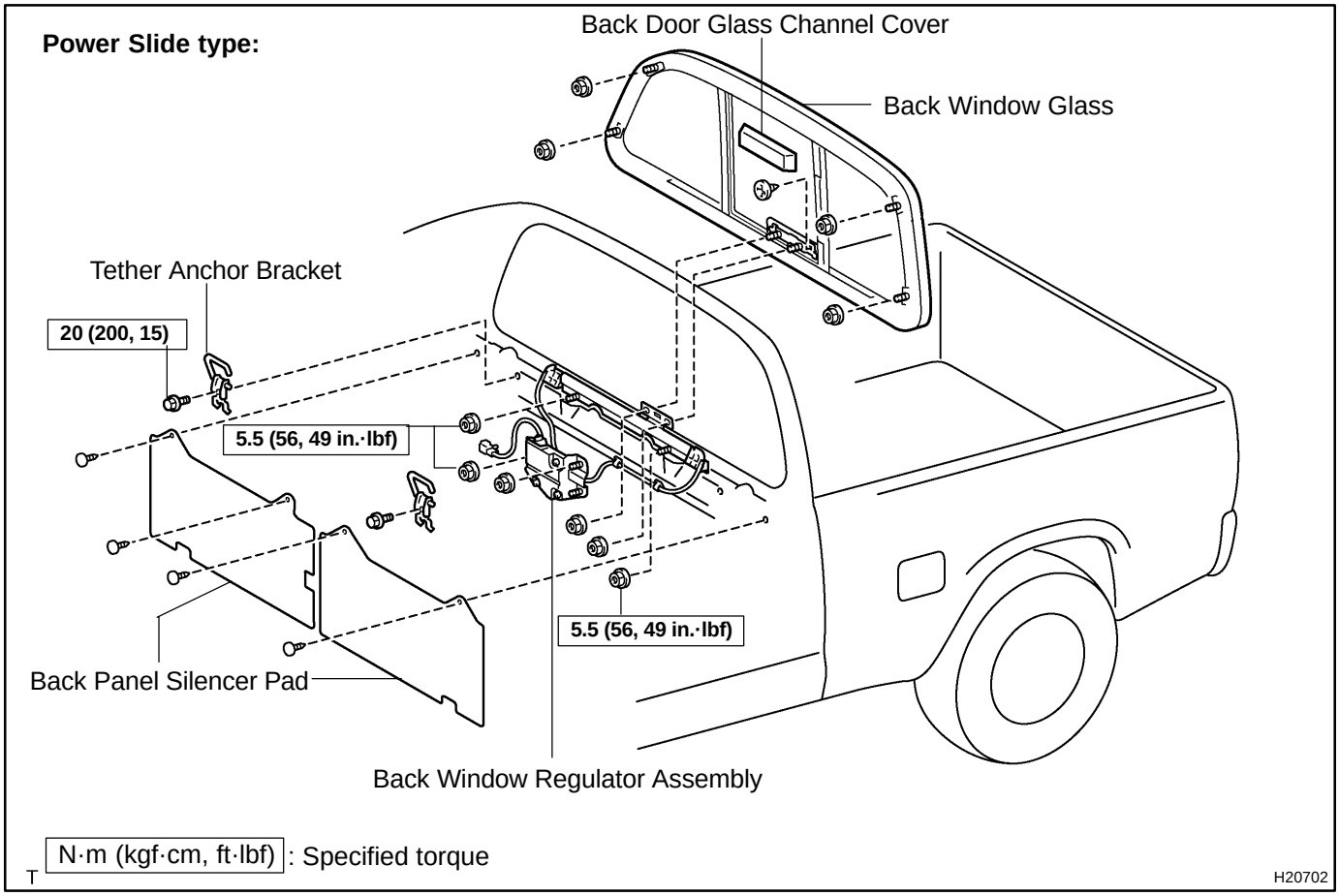
Power Slide type:
Back Door Glass Channel Cover
Back Window Glass
Tether Anchor Bracket
20 (200, 15)
5.5 (56, 49 in.·lbf)
5.5 (56, 49 in.·lbf)
Back Panel Silencer Pad
Back Window Regulator Assembly
N·m (kgf·cm, ft·lbf) : Specified torque
T
H20702

BO4H9–01

REMOVAL

HINT:

For steps 2 to 10, refer to page BO–85.

1. **Access cab (Standard Body Type),**
   Access cab (Wide Body Type):
   REMOVE REAR SEAT (See page BO–125)
2. **Standard cab:**
   REMOVE FRONT DOOR SCUFF PLATES
   (See page BO–85)
3. **Access cab (Standard Body Type),**
   Access cab (Wide Body Type):
   REMOVE ACCESS DOOR SCUFF PLATES
   (See page BO–85)
4. **REMOVE ASSIST GRIPS (See page BO–85)**
5. **Standard cab:**
   REMOVE FRONT PILLAR GARNISHES
   (See page BO–85)
6. **Access cab (Standard Body Type),**
   Access cab (Wide Body Type):
   REMOVE ROOF SIDE RAIL GARNISHES
   (See page BO–85)
7. **REMOVE ROOM LIGHT (See page BO–85)**
8. **Standard cab:**
   REMOVE COAT HOOK (See page BO–85)
9. **Standard cab:**
   REMOVE BACK PANEL UPPER GARNISH
   (See page BO–85)
10. **REMOVE QUARTER TRIMS (See page BO–85)**
11. **REMOVE REAR PART OF ROOF HEADLINING**

(a) Standard cab:
Remove the 2 clips and the rear part of the roof headlining.

(b) Access cab (Standard Body Type),
Access cab (Wide Body Type):
Remove the 3 clips and the rear part of the roof headlining.

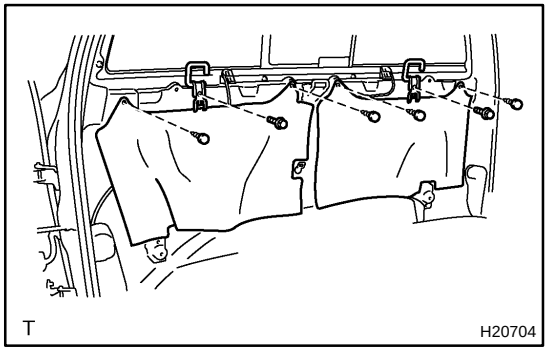

12. **Power slide type:**
    REMOVE BACK WINDOW REGULATOR ASSEMBLY

(a) Remove the 2 bolts and tether anchor brackets.

(b) Remove the 4 clips and 2 back panel silencer pads.

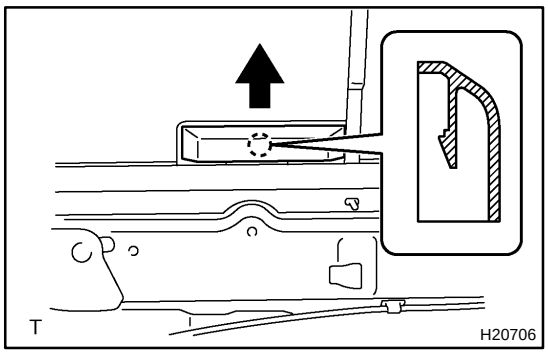

(c) Using a screwdriver, remove the back door glass channel cover.

HINT:

Tape the screwdriver tip before use.

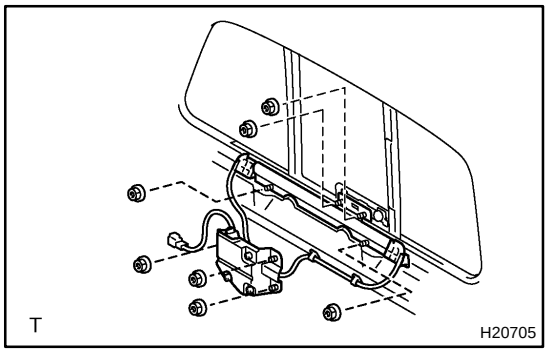

(d) Remove the 7 nuts and back window regulator assembly.

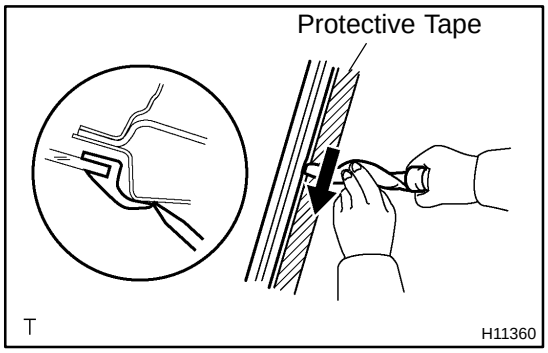

13. REMOVE BACK WINDOW GLASS

(a) Remove the 4 nuts.

(b) Using a screwdriver, remove the weatherstrip from the body.

NOTICE:

Be careful not to damage the body paint.

HINT:

Tape the screwdriver tip before use.

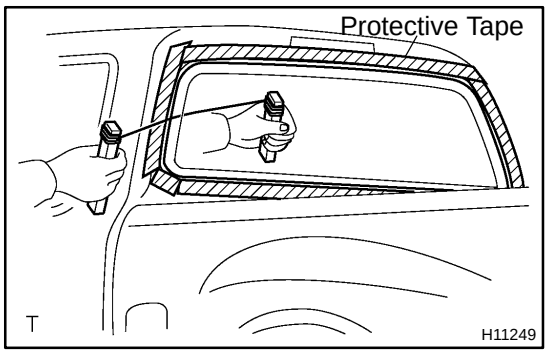

(c) Pass piano wire through from the interior.

(d) Tie both wire ends to wooden blocks or similar objects.

HINT:

Apply protective tape to the outer surface to prevent the surface from being scratched.

NOTICE:

When separating the glass, take care not to damage the paint and exterior.

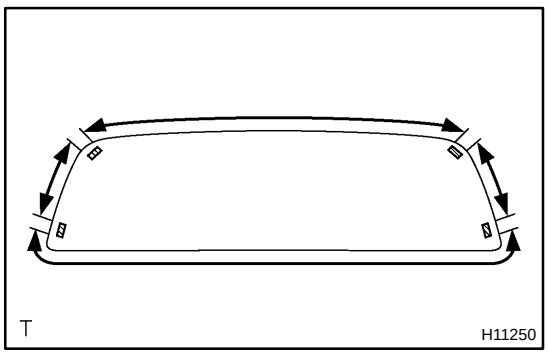

(e) Cut off the adhesive by pulling the piano wire around it.

HINT:

Cut off the adhesive on the areas as shown in the illustration but leave the adhesive where the stud bolts exist.

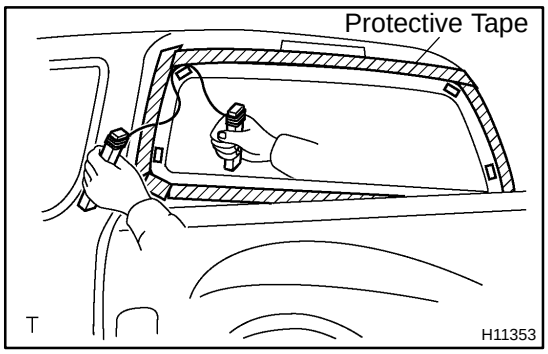

(f) Pass piano wire through as shown in the illustration, and cut off the adhesive on the part adhered to the stud bolts.

(g) Remove the glass.

NOTICE:

Leave as much of the adhesive on the body as possible when removing the glass.

BO4HA–01

INSTALLATION

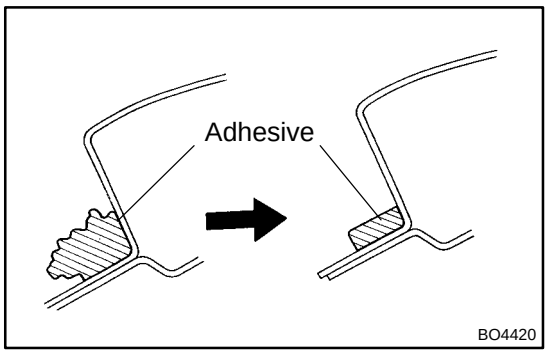

HINT:

For steps 8 to 17, refer to page BO–89.

1. CLEAN AND SHAPE CONTACT SURFACE OF BODY

(a) Using a knife, cut away any rough adhesive on the contact surface of the body to shape the surface.

HINT:

Leave as much of the adhesive on the body as possible.

(b) Clean the contact surface of the body with a piece of shop rag saturated with cleaner.

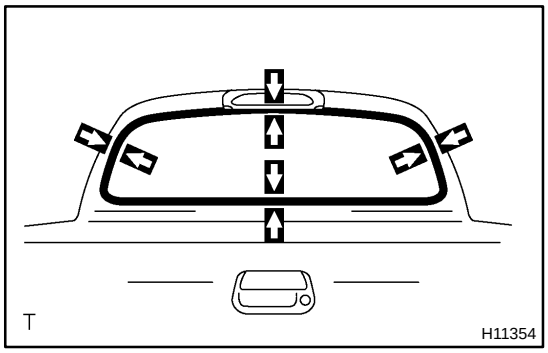

2. POSITION GLASS

(a) Place the glass in the correct position.

(b) Check that the whole contact surface of the glass rim is perfectly even.

(c) Place reference marks on the glass and body.

(d) Remove the glass.

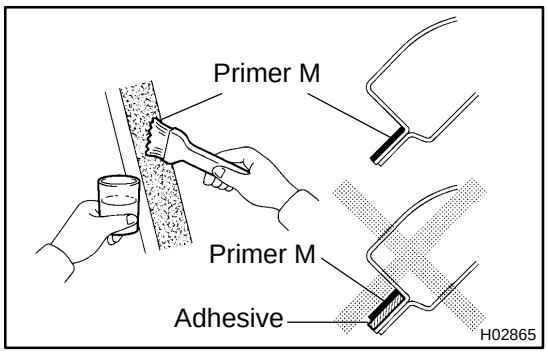

3. COAT CONTACT SURFACE OF BODY WITH PRIMER "M"

Using a brush, coat the exposed part of the body with Primer M.

NOTICE:

- **Dry the primer coating for 3 minutes or more.**
- **Do not coat the adhesive with Primer M.**
- **Do not keep any of the opened Primer M for later use.**

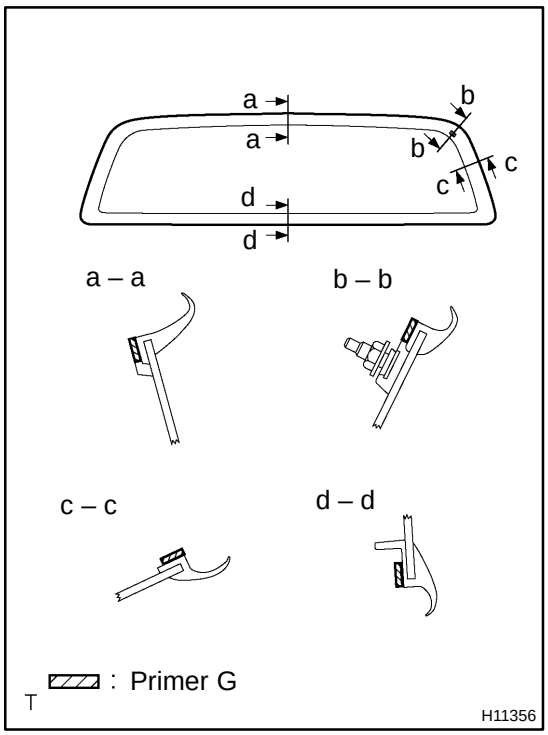

4. Fixed type:
COAT CONTACT SURFACE OF GLASS WITH PRIMER "G"

Using a brush or sponge, coat the edge of the glass and the contact surface with Primer G as shown in the illustration.

HINT:

If the area other than the specified is coated by accident, wipe off the primer with a clean shop rag before it dries.

NOTICE:

- **Dry the primer coating for 3 minutes or more.**
- **Do not keep any of the opened Primer G for later use.**

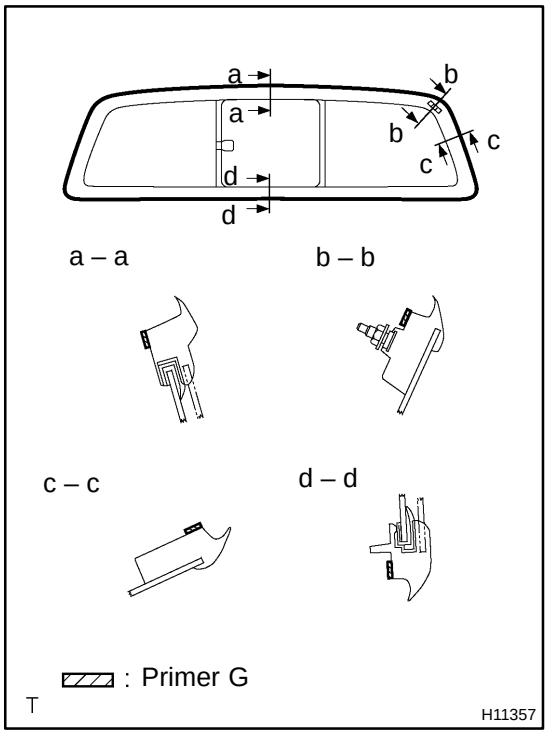

5. Slide type:
COAT CONTACT SURFACE OF GLASS WITH PRIMER "G"

Using a brush or sponge, coat the edge of the glass and the contact surface with Primer G as shown in the illustration.

HINT:

If the area other than the specified is coated by accident, wipe off the primer with a clean shop rag before it dries.

NOTICE:

- **Dry the primer coating for 3 minutes or more.**
- **Do not keep any of the opened Primer G for later use.**

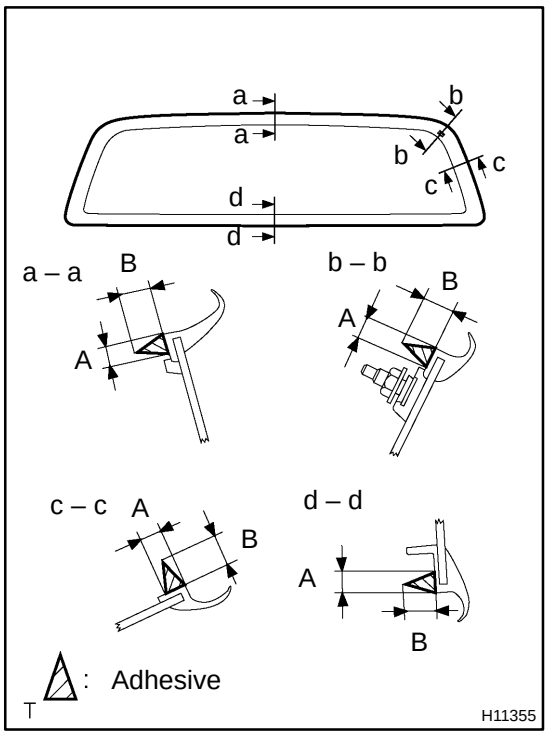

6. Fixed type:
APPLY ADHESIVE

(a) Cut off the tip of the cartridge nozzle.
Part No. 08850–00801 or equivalent

HINT:
After cutting off the tip, use all adhesive within the time described in the table below.

Temperature	Tackfree time
35 ˚C (95 ˚F)	15 minutes
20 ˚C (68 ˚F)	100 minutes
5 ˚C (41 ˚F)	8 hours

(b) Load the cartridge into a sealer gun.

(c) Coat the glass with adhesive, as shown in the illustration.
A: 8.0 mm (0.314 in.)
B: 12.0 mm (0.472 in.)

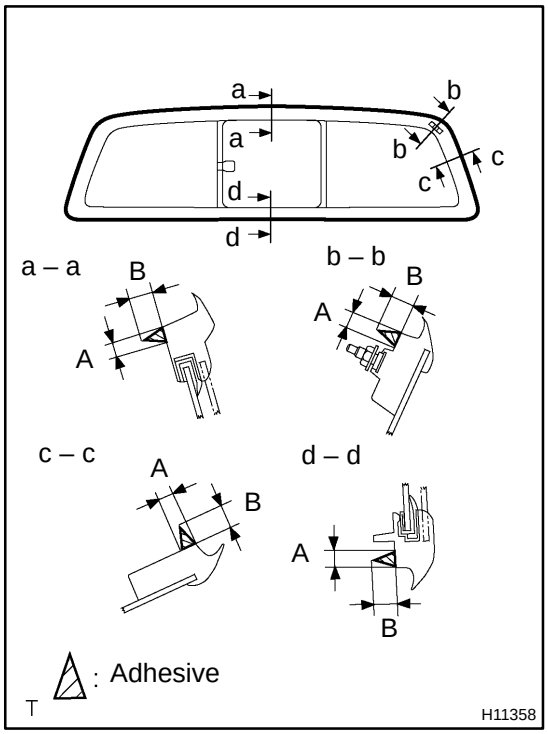

7. Slide type:
APPLY ADHESIVE

(a) Cut off the tip of the cartridge nozzle.
Part No. 08850–00801 or equivalent

HINT:
After cutting off the tip, use all adhesive within the time described in the table below.

Temperature	Tackfree time
35 ˚C (95 ˚F)	15 minutes
20 ˚C (68 ˚F)	100 minutes
5 ˚C (41 ˚F)	8 hours

(b) Load the cartridge into a sealer gun.

(c) Coat the glass with adhesive, as shown in the illustration.
A: 8.0 mm (0.314 in.)
B: 12.0 mm (0.472 in.)

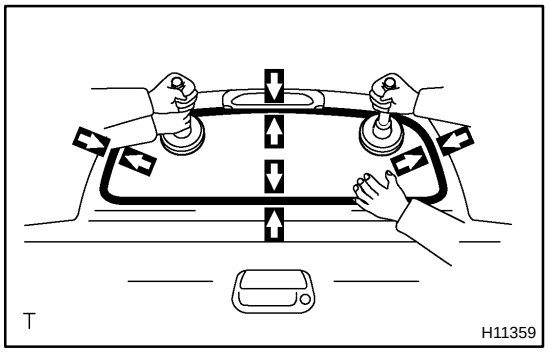

8. INSTALL BACK WINDOW GLASS

(a) Position the glass so that the reference marks are aligned, and press it in gently along the rim.

(b) Using a spatula, apply adhesive on the glass rim.

(c) Use a scraper to remove any excess or protruding adhesive.

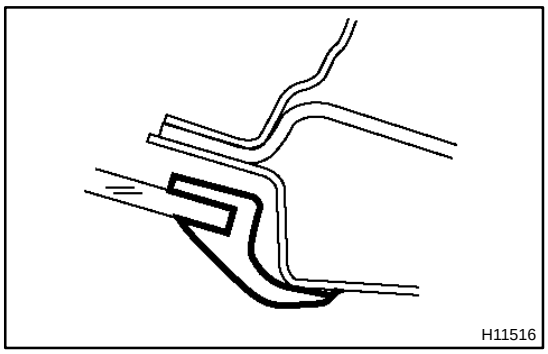

HINT:
Confirm that the moulding is attached to the body panel as shown in the illustration.

(d) Hold the back window glass in place securely with a protective tape or equivalent until the adhesive hardens.

NOTICE:
Take care not to drive the vehicle during the time described in the table below.

Temperature	Minimum time prior to driving the vehicle
35 °C (95 °F)	1.5 hours
20 °C (68 °F)	5 hours
5 °C (41 °F)	24 hours

9. INSPECT FOR LEAK AND REPAIR

NOTICE:
Conduct a leak test after the adhesive has completely hardened.

Part No. 08833–00030 or equivalent

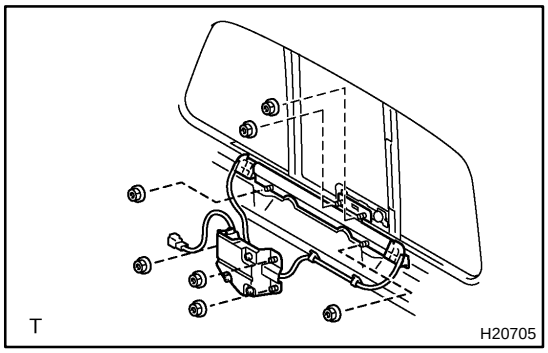

10. Power slide type:
INSTALL BACK WINDOW REGULATOR ASSEMBLY

(a) Install the back window regulator assembly with the 7 nuts.
Torque: 5.5 N·m (54 kgf·cm, 49 in.·lbf)

(b) Install the back door glass channel cover.

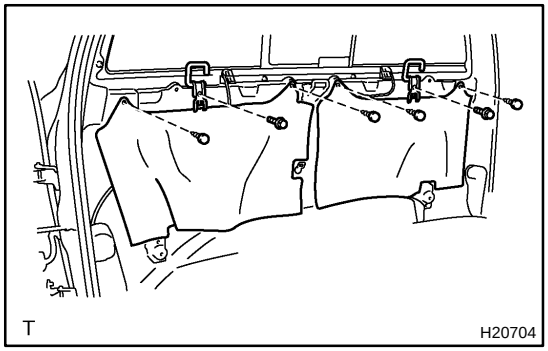

11. Power slide type:
INSTALL BACK PANEL SILENCER PADS

(a) Install the 4 clips and 2 back panel silencer pads.

(b) Install the tether anchor brackets with the 2 bolts.
Torque: 20 N·m (200 kgf·cm, 15 ft·lbf)

12. INSTALL REAR PART OF ROOF HEADLINING

(a) Standard cab:
Install the rear part of the roof headlining with the 2 clips.

(b) Access cab:
Install the rear part of the roof headlining with the 3 clips.

13. INSTALL QUARTER TRIMS (See page BO–89)

14. Standard cab:
INSTALL BACK PANEL UPPER GARNISH (See page BO–89)

15. Standard cab:
INSTALL COAT HOOK (See page BO–89)

16. INSTALL ROOM LIGHT (See page BO–89)

17. **Access cab (Standard Body Type), Access cab (Wide Body Type): INSTALL ROOF SIDE RAIL GARNISHES (See page BO–89)**
18. **Standard cab: INSTALL FRONT PILLAR GARNISHES (See page BO–89)**
19. **INSTALL ASSIST GRIPS (See page BO–89)**
20. **Access cab (Standard Body Type), Access cab (Wide Body Type): INSTALL ACCESS DOOR SCUFF PLATES (See page BO–89)**
21. **Standard cab: INSTALL FRONT DOOR SCUFF PLATES (See page BO–89)**
22. **Access cab (Standard Body Type), Access cab (Wide Body Type): INSTALL REAR SEAT (See page BO–132)**

INSTRUMENT PANEL

BO4HB–01

COMPONENTS

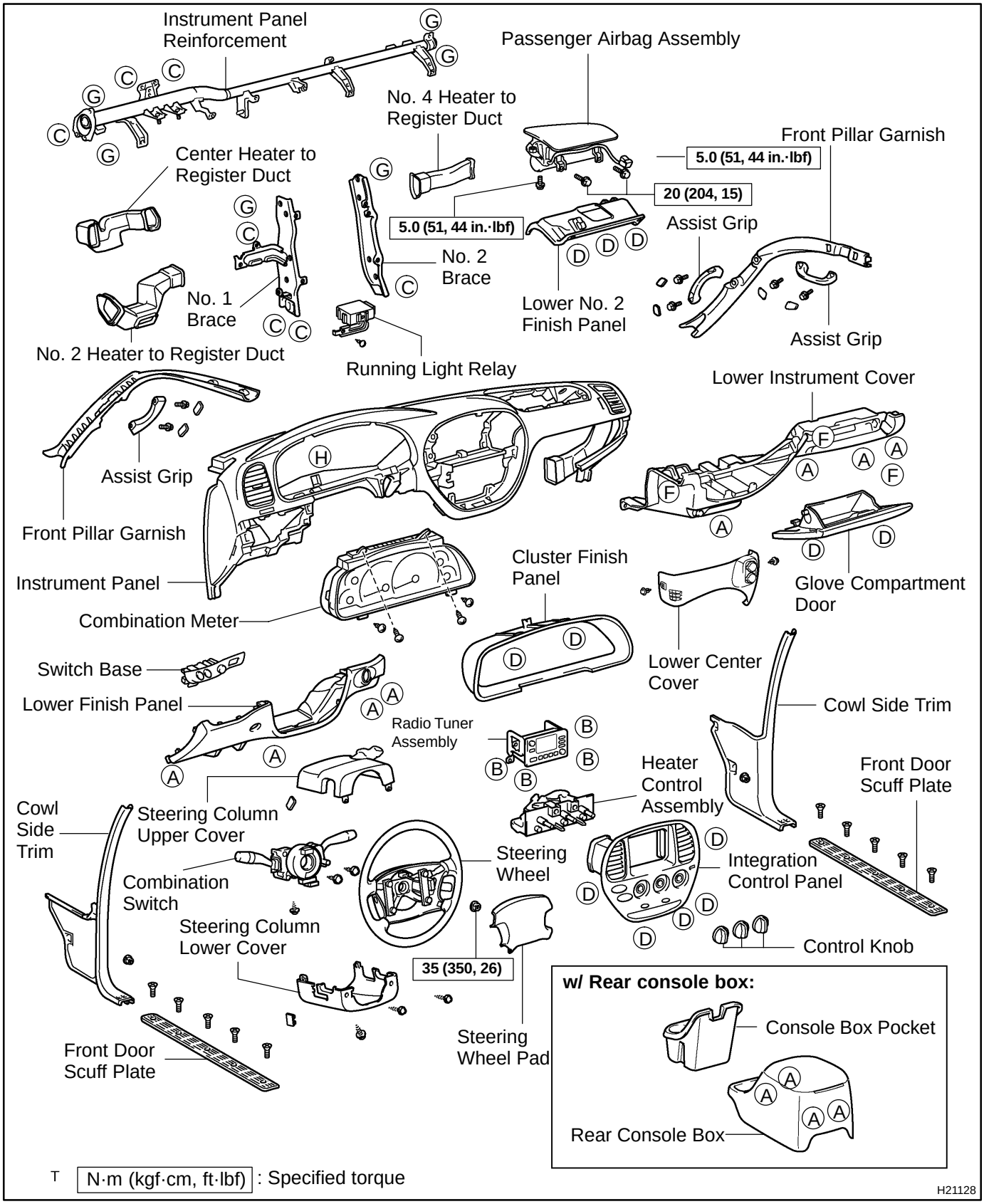

Large type console box:

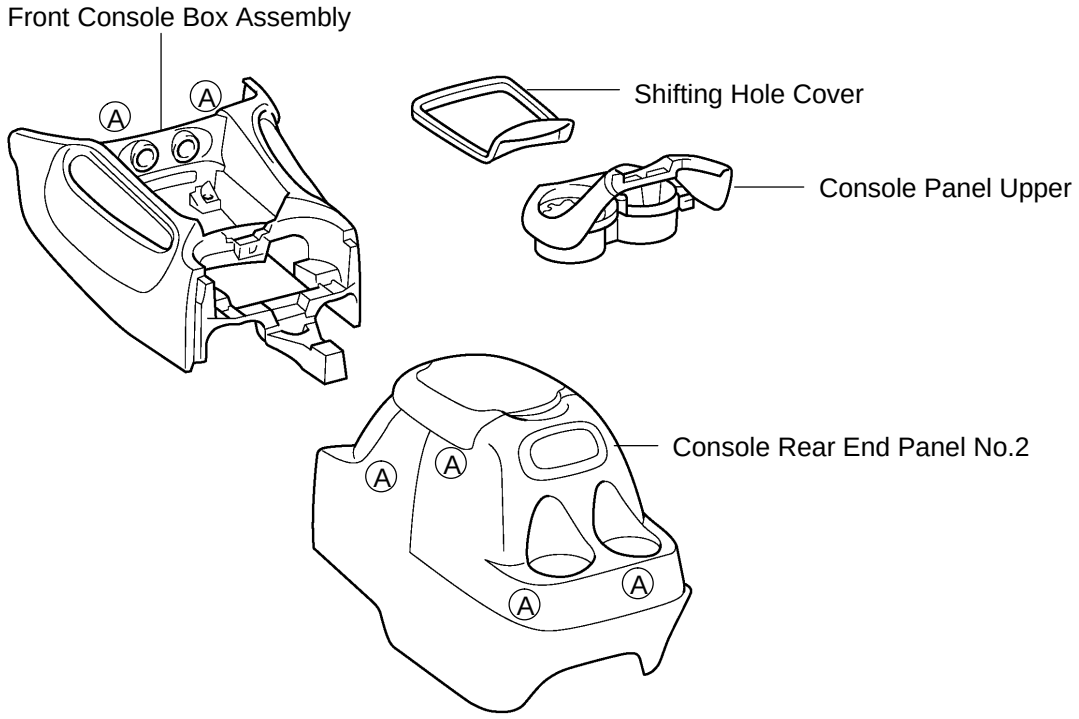

T

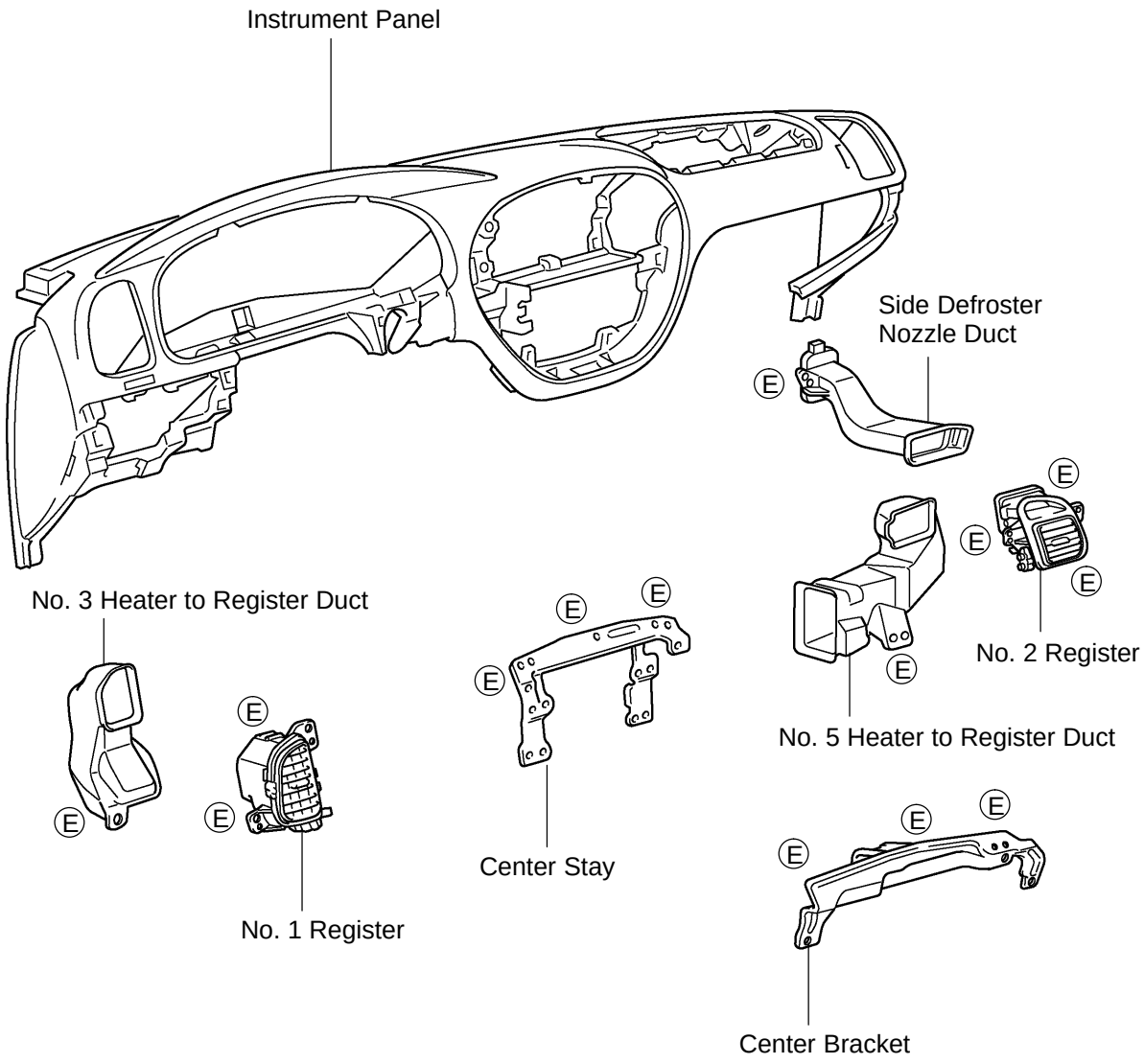
Instrument Panel
Side Defroster Nozzle Duct
E
No. 3 Heater to Register Duct
No. 2 Register
No. 5 Heater to Register Duct
Center Stay
No. 1 Register
Center Bracket

T

H21123

HINT:
The shapes and sizes of the screws, bolts and nuts are indicated in the table below. The codes (A–H) correspond to those indicated in the COMPONENTS on the previous pages.

mm (in.)

Code	Shape	Size	Code	Shape	Size	Code	Shape	Size
Ⓐ	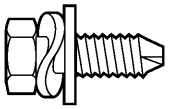	ø = 6 (0.24) L = 20 (0.79)	Ⓑ	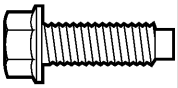	ø = 6 (0.24) L = 20 (0.79)	Ⓒ	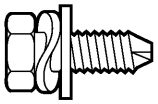	ø = 6 (0.24) L = 18 (0.71)
Ⓓ		ø = 5.22 (0.2055) L = 16 (0.63)	Ⓔ	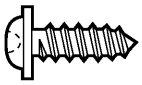	ø = 5 (0.20) L = 16 (0.63)	Ⓕ	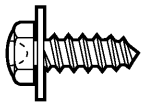	ø = 5 (0.20) L = 16 (0.63)
Ⓖ	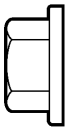	ø = 8 (0.31)	Ⓗ	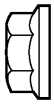	ø = 6 (0.24)			

T

H11188

BO4HC–01

REMOVAL

1. REMOVE FRONT DOOR SCUFF PLATE

(a) Standard cab:
Remove the 10 screws and front door scuff plates.

(b) Access cab (Standard Body Type),
Access cab (Wide Body Type):
Remove the 8 screws and front door scuff plates.

(c) Use the same procedures described above to the other side.

2. REMOVE COWL SIDE TRIM

(a) Remove the 2 clips and cowl side trims.

(b) Use the same procedures described above to the other side.

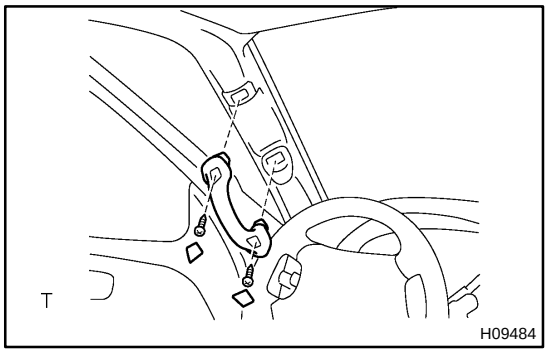

3. REMOVE ASSIST GRIPS

(a) Using a screwdriver, remove the caps.

HINT:
Tape the screwdriver tip before use.

(b) Driver side:
Using a torx driver, remove the 2 torx screws and assist grip.
Torx driver: T30 (Part No.09041–00030 or locally manufactured tool)

(c) Passenger side:
Using a torx driver, remove the 4 torx screws and 2 assist grips.
Torx driver: T30 (Part No.09041–00030 or locally manufactured tool)

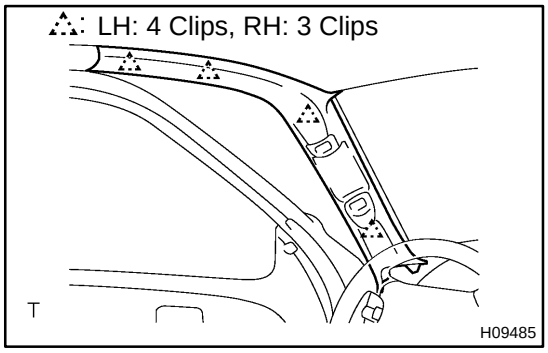

4. REMOVE FRONT PILLAR GARNISH

(a) Using a screwdriver, remove the front pillar garnish.

HINT:
Tape the screwdriver tip before use.

(b) Use the same procedures described above to the other side.

5. REMOVE STEERING WHEEL PAD (See page SR–18)

6. REMOVE STEERING WHEEL (See page SR–18)

7. REMOVE STEERING COLUMN COVERS (See page SR–18)

8. REMOVE COMBINATION SWITCH

Disconnect the 4 connectors, remove the 3 screws and combination switch.

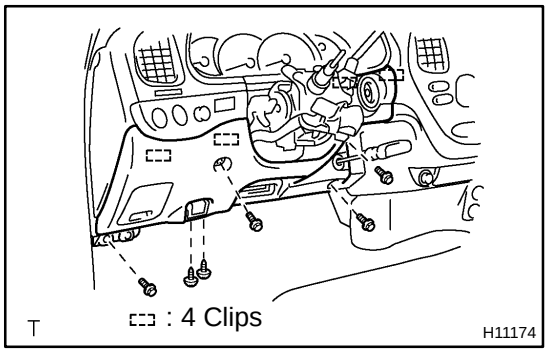

9. REMOVE LOWER FINISH PANEL

(a) Remove the 2 screws and hood lock release lever.

(b) Remove the 4 bolts and lower finish panel.

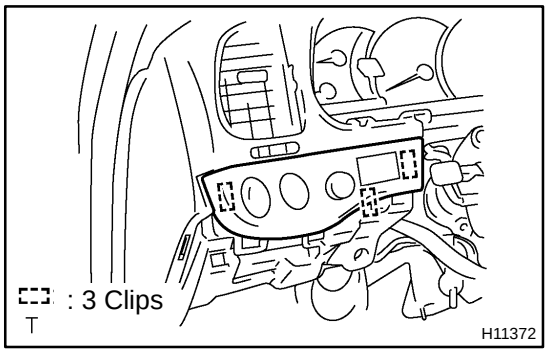

10. REMOVE SWITCH BASE

Using a screwdriver, lift up the switch base and remove it.

HINT:

Tape the screwdriver tip before use.

11. REMOVE NO. 2 HEATER TO REGISTER DUCT

12. REMOVE STEERING COLUMN (See page SR–18)

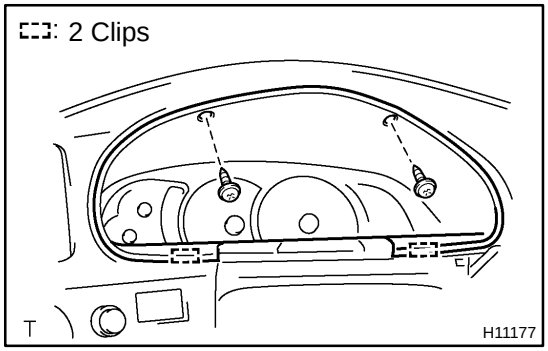

13. REMOVE CLUSTER FINISH PANEL

Remove the 2 screws and cluster finish panel.

14. REMOVE COMBINATION METER

(a) Remove the 4 screws.

(b) Remove the combination meter and disconnect the 4 connectors.

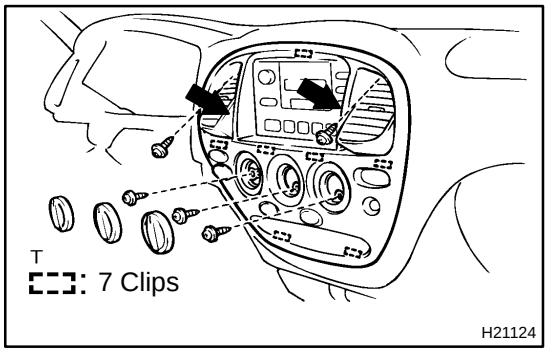

15. REMOVE INTEGRATION CONTROL PANEL

(a) Remove the 3 control knobs.

(b) Remove the 5 screws.

(c) Remove the integration control panel by pulling the portions indicated by arrows in the illustration.

(d) Disconnect the connectors.

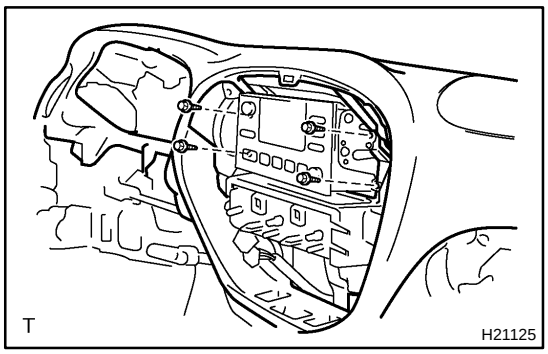

16. REMOVE RADIO TUNER ASSEMBLY

(a) Disconnect the connector.

(b) Remove the 4 bolts and radio tuner assembly.

17. REMOVE HEATER CONTROL ASSEMBLY

(See page AC–84)

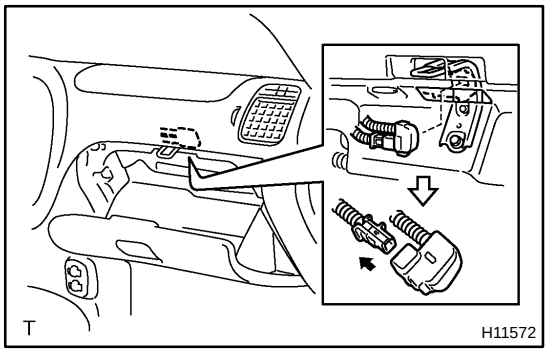

18. DISCONNECT PASSENGER AIRBAG ASSEMBLY CONNECTOR

NOTICE:

When handling the airbag connector, take care not to damage the airbag wire harness.

(a) Using a clip remover, disengage the connector clamp.

(b) Disconnect the connector as shown in the illustration.

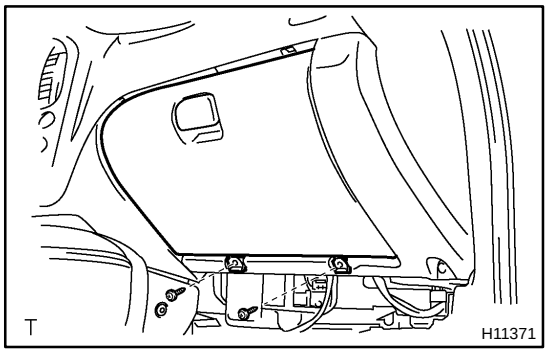

19. REMOVE GLOVE COMPARTMENT DOOR

Remove the 2 screws and glove compartment door.

20. REMOVE LOWER NO. 2 FINISH PANEL

Remove the 3 screws and lower No. 2 finish panel.

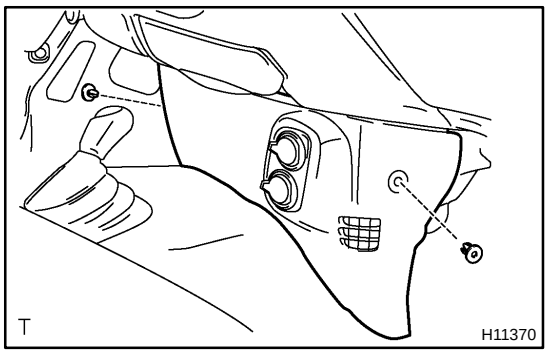

21. REMOVE LOWER CENTER COVER

Remove the 2 clips and lower center cover.

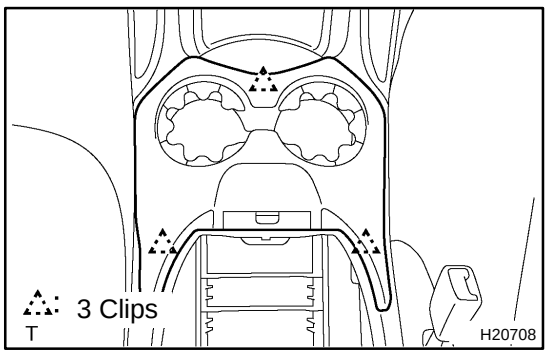

22. Large type console box:

REMOVE FRONT CONSOLE BOX ASSEMBLY

(a) Remove the shifting hole cover.

(b) Using a screwdriver, remove the console panel upper.

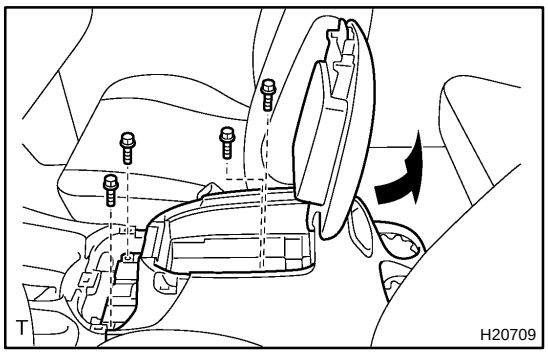

(c) Remove the 4 bolts and console rear end panel No.2.

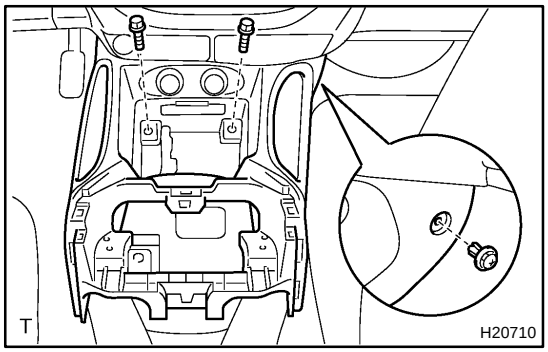

(d) Remove the 2 bolts, clip and front console box assembly.

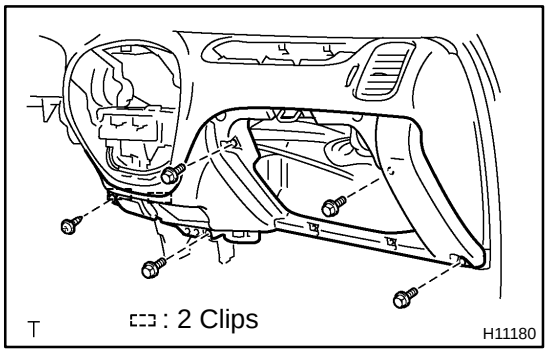

23. REMOVE LOWER INSTRUMENT COVER

(a) Remove the 4 bolts and screw.

(b) Using a screwdriver, remove the lower instrument cover.

HINT:

Tape the screwdriver tip before use.

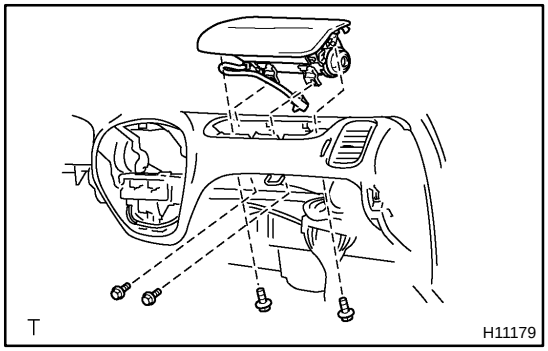

24. REMOVE PASSENGER AIRBAG ASSEMBLY

(a) Remove the 2 bolts which hold the passenger airbag assembly and instrument panel.

Torque: 5.0 N·m (51 kgf·cm, 44 in.·lbf)

(b) Remove the 2 bolts which hold the passenger airbag assembly and instrument panel reinforcement.

Torque: 20 N·m (204 kgf·cm, 15 ft·lbf)

CAUTION:

- **Do not place the passenger airbag assembly with the airbag deployment side facing down.**
- **Never disassemble the passenger airbag assembly.**

25. w/ Rear console box:

REMOVE REAR CONSOLE BOX

(a) Using a screwdriver, remove the console box pocket.

HINT:

Tape the screwdriver tip before use.

(b) Remove the 4 bolts and rear console box.

26. REMOVE NO. 4 HEATER TO REGISTER DUCT

27. REMOVE INSTRUMENT PANEL

(a) Remove the nut.

(b) Disconnect the connectors and remove the instrument panel.

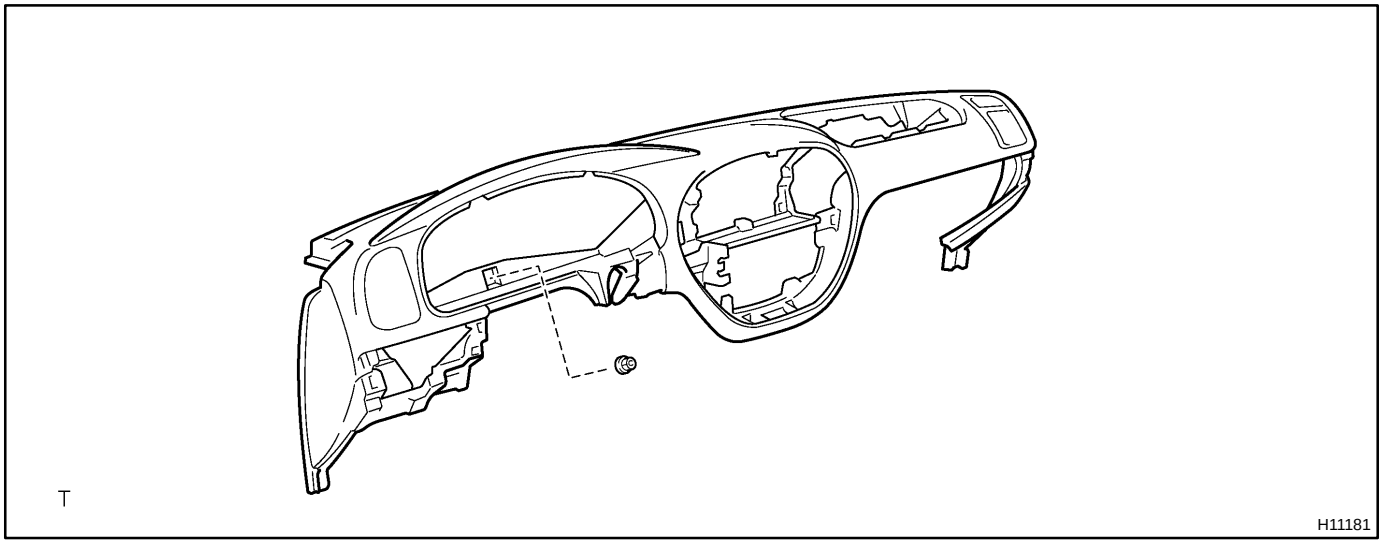

28. REMOVE CENTER HEATER TO REGISTER DUCT

29. REMOVE INSTRUMENT PANEL REINFORCEMENT

(a) Disconnect the connectors.

(b) Remove the screw and running light relay.

(c) Remove the 3 bolts, nut and No. 1 brace.

(d) Remove the bolt, nut and No. 2 brace.

(e) Remove the 3 bolts, 4 nuts and instrument panel reinforcement.

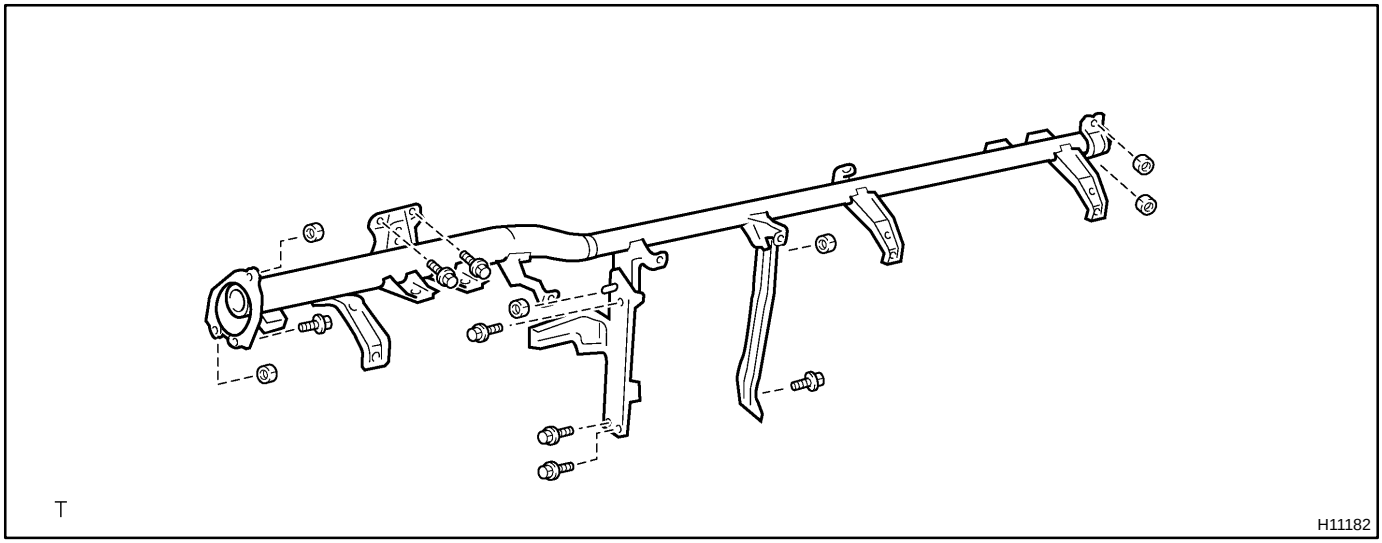

BO2F5–02

DISASSEMBLY

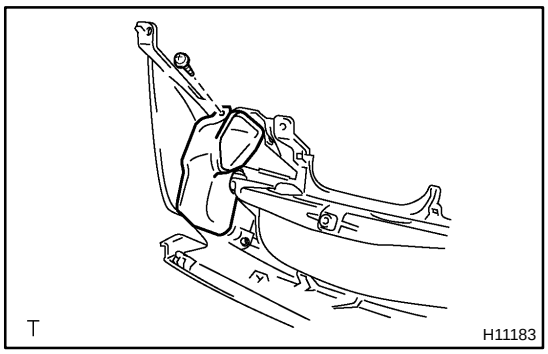

1. REMOVE NO. 3 HEATER TO REGISTER DUCT

Remove the screw and No. 3 heater to register duct.

2. REMOVE NO. 1 REGISTER

Remove the 2 screws and No. 1 register.

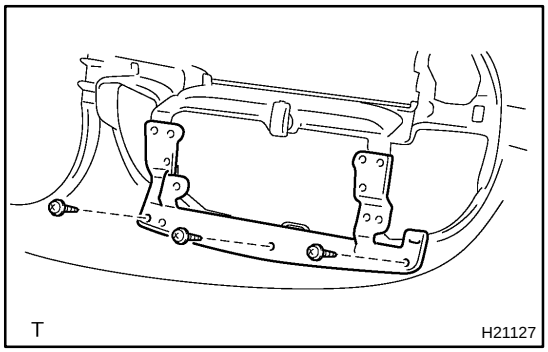

3. REMOVE CENTER STAY

Remove the 3 screws and center stay.

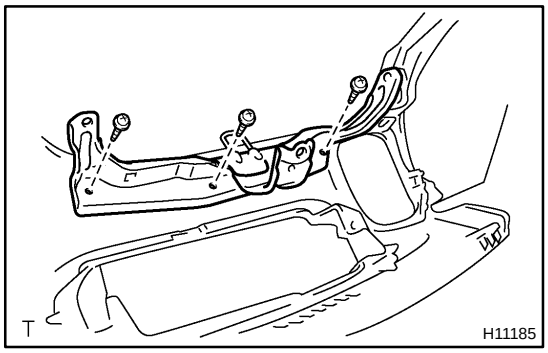

4. REMOVE CENTER BRACKET

Remove the 3 screws and center bracket.

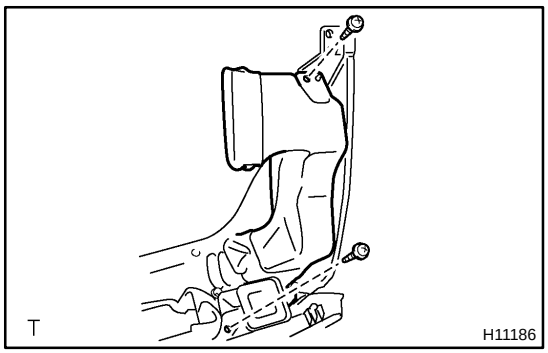

5. REMOVE NO. 5 HEATER TO REGISTER DUCT

Remove the screw and No. 5 heater to register duct.

6. REMOVE SIDE DEFROSTER NOZZLE DUCT

Remove the screw and side defroster nozzle duct.

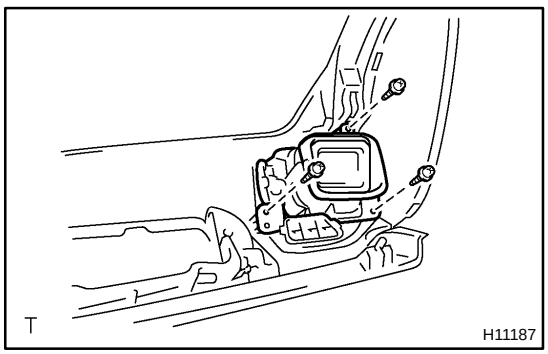

7. REMOVE NO. 2 REGISTER

Remove the 3 screws and No. 2 register.

BO0J5–02

REASSEMBLY

The reassembly is in the reverse order of the disassembly (See page BO–77).

BO2F6–02

INSTALLATION

The installation is in the reverse order of the removal (See page BO–72).

TAIL GATE

BO0J7–06

COMPONENTS

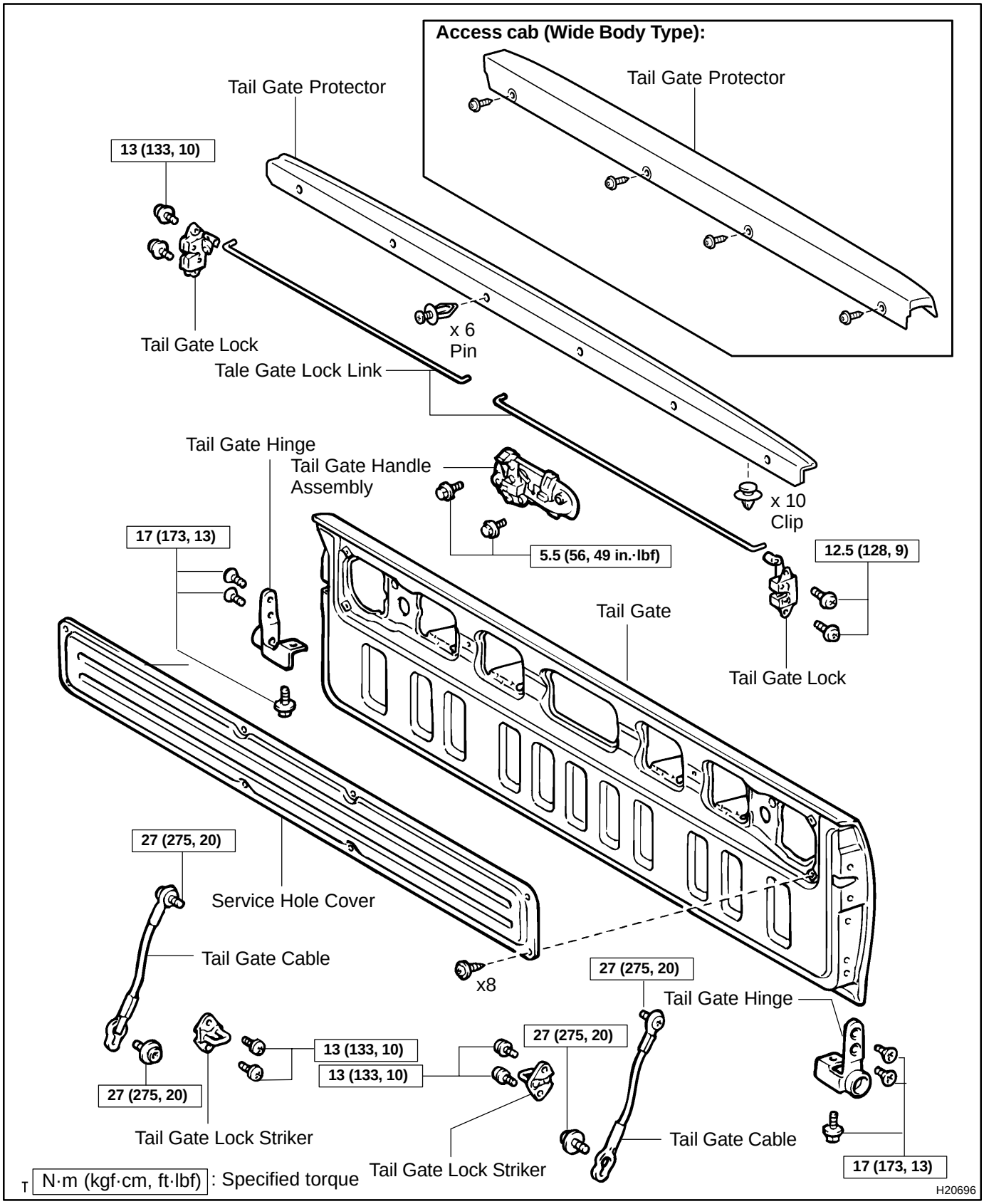

BO2F7–03

REMOVAL

1. REMOVE TAIL GATE PROTECTOR (See page BO–46)

2. REMOVE SERVICE HOLE COVER

Using a torx socket wrench (T30), remove the 8 screws and service hole cover.

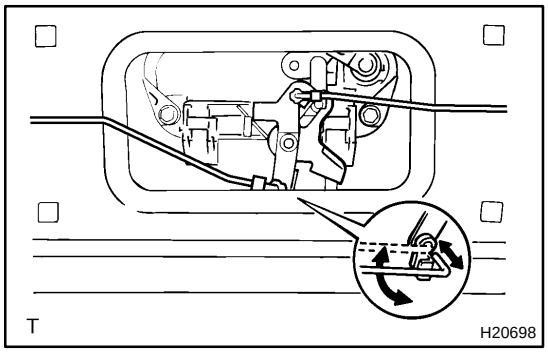

3. REMOVE TAIL GATE LOCK

(a) Remove the 2 tail gate lock links from the tail gate locks and tail gate handle assembly.

(b) Using a torx socket wrench (T40), remove the 4 screws and 2 tail gate locks.

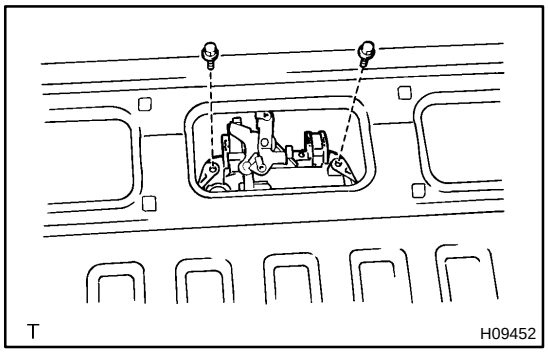

4. REMOVE TAIL GATE HANDLE ASSEMBLY

Remove the 2 bolts and tail gate handle assembly.

5. REMOVE TAIL GATE LOCK STRIKERS

Using a torx socket wrench (T40), remove the 4 screws and tail gate lock strikers.

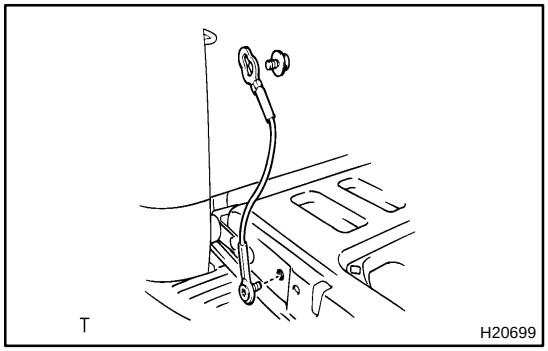

6. REMOVE TAIL GATE CABLE

(a) Remove the deck side shaft and tail gate cable from the deck.

(b) Remove the gate side shaft and tail gate cable.

(c) Use the same proedures described above to the other side.

7. REMOVE TAIL GATE

(a) Remove the 2 bolts and tail gate.

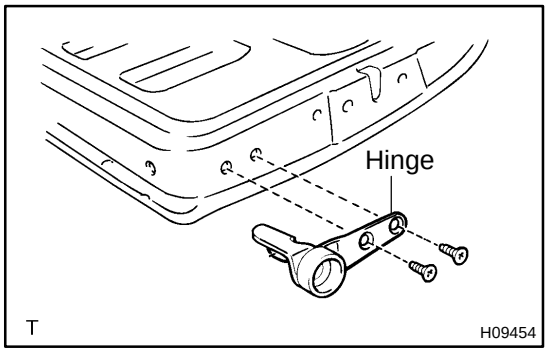

NOTICE:

Be careful not to drop the tail gate.

(b) Using a torx socket wrench (T40), remove the 6 screws and 2 tail gate hinges from the tail gate.

BO0J9–05

INSTALLATION

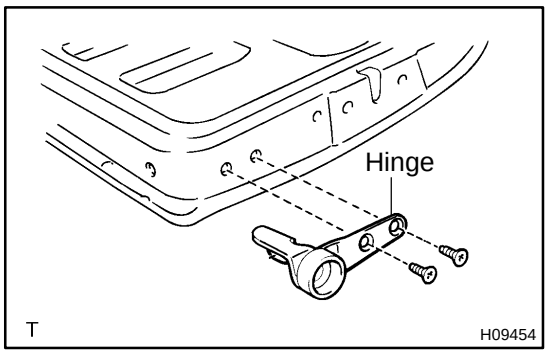

1. INSTALL TAIL GATE

(a) Using a torx socket wrench (T40), install the tail gate hinges to the tail gate with the 4 screws.
Torque: 17 N·m (178 kgf·cm, 13 ft·lbf)

(b) Install the tail gate to the body with the 2 bolts.
Torque: 17 N·m (178 kgf·cm, 13 ft·lbf)

NOTICE:
Be careful not to drop the tail gate.

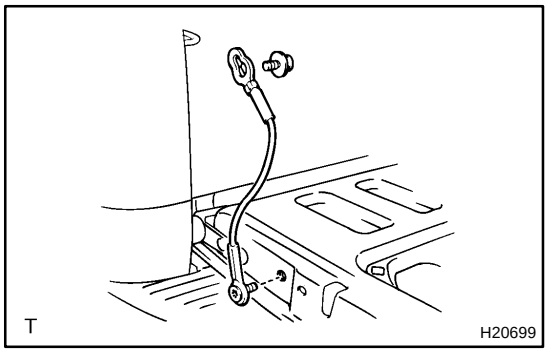

2. INSTALL TAIL GATE CABLE

(a) Install the tail gate cable and gate side shaft to the tail gate.
Torque: 27 N·m (275 kgf·cm, 20 ft·lbf)

(b) Install the tail gate cable and deck side shaft to the body.
Torque: 27 N·m (275 kgf·cm, 20 ft·lbf)

(c) Use the same procedures described above to the other side.

3. INSTALL TAIL GATE LOCK STRIKER

Using a torx socket wrench (T40), install the 2 tail gate lock strikers with the 4 screws.
Torque: 13 N·m (133 kgf·cm, 10 ft·lbf)

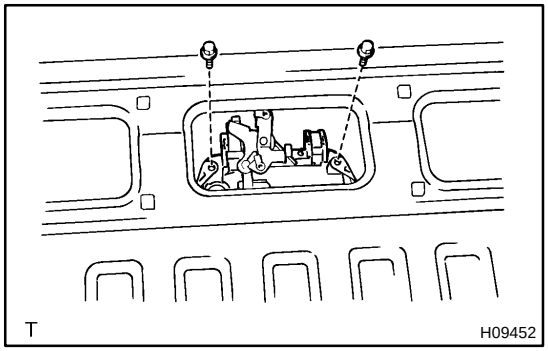

4. INSTALL TAIL GATE HANDLE ASSEMBLY

Install the tail gate handle assembly with the 2 bolts.
Torque: 5.5 N·m (56 kgf·cm, 49 in.·lbf)

5. INSTALL TAIL GATE LOCK

(a) Using a torx socket wrench (T40), install the 2 tail gate locks with the 4 screws.
Torque: 12.5 N·m (128 kgf·cm, 9 ft·lbf)

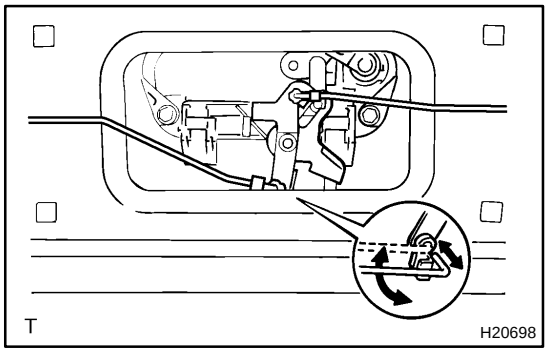

(b) Connect one end of the tail gate lock link to the tail gate lock and another end to the tail gate handle assembly.

6. INSTALL SERVICE HOLE COVER

Using a torx socket wrench (T30), install the service hole cover with the 8 screws.

7. INSTALL TAIL GATE PROTECTOR (See page BO–47)

ROOF HEADLINING

COMPONENTS

BO2F8–02

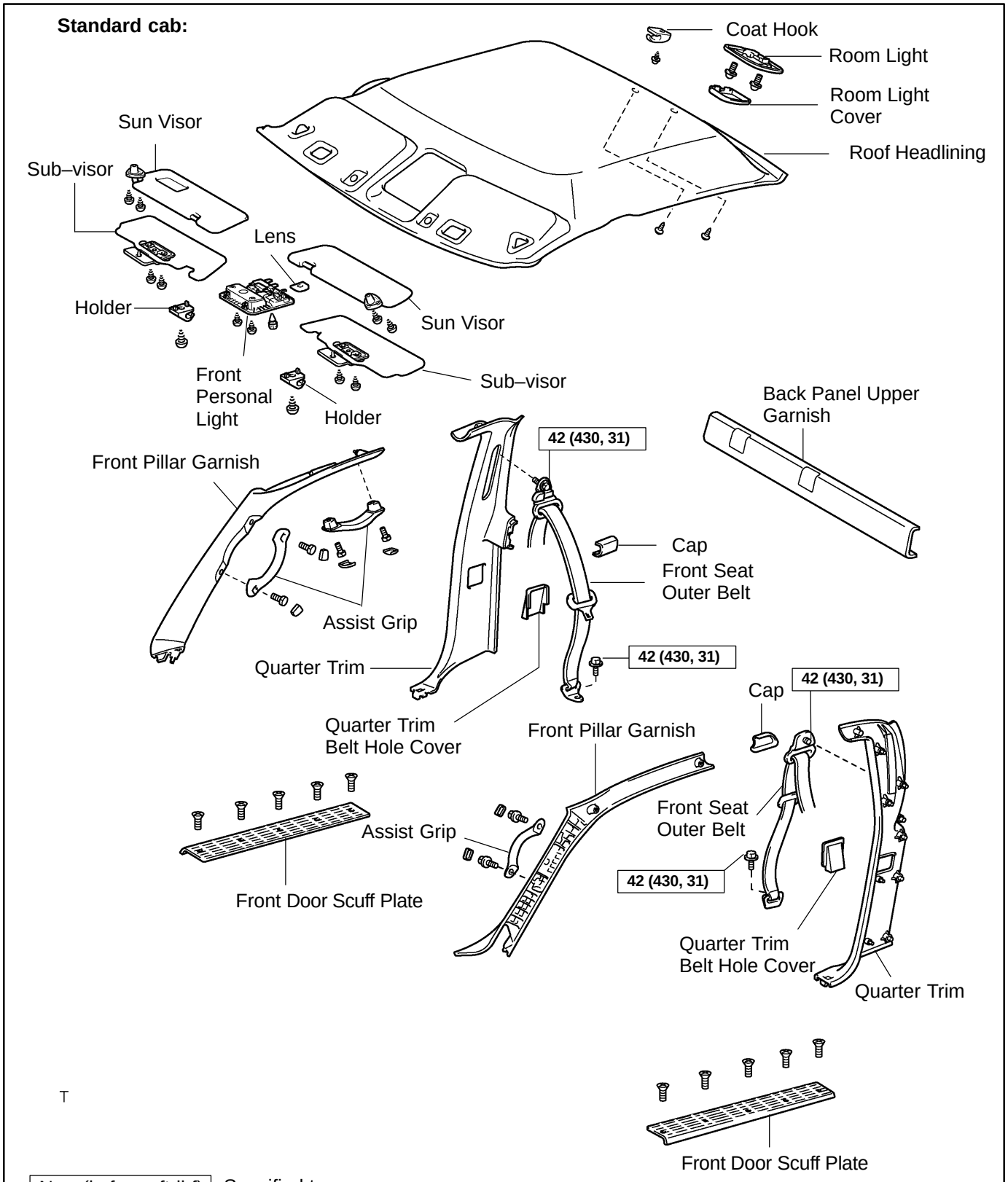

Access cab:

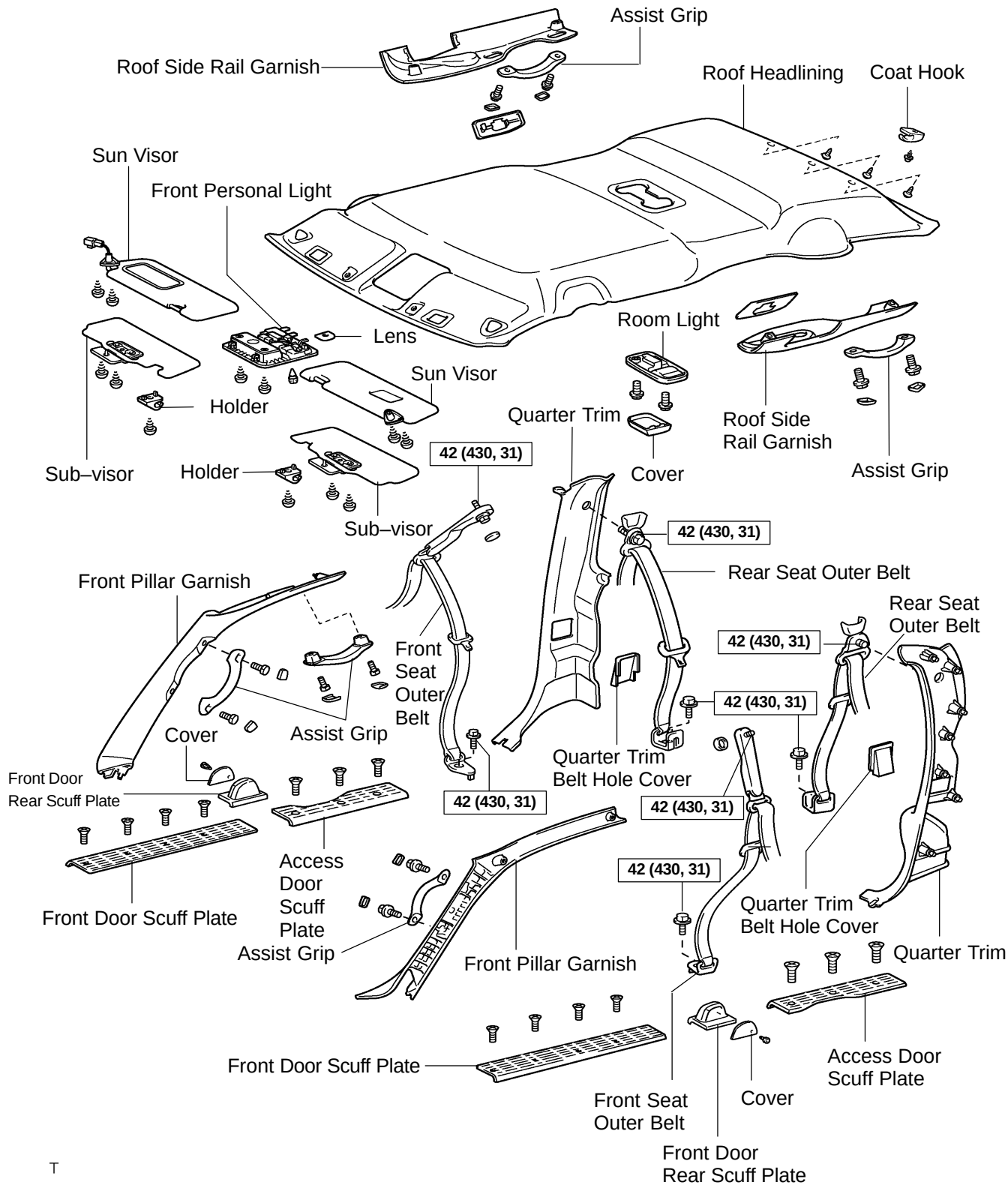

N·m (kgf·cm, ft·lbf) : Specified torque

H11168

BO2F9–02

REMOVAL

HINT:

Tape the screwdriver tip before using it to remove the parts.

1. Access cab:
REMOVE REAR SEAT (See page BO–125)

2. REMOVE FRONT DOOR SCUFF PLATES

(a) Standard cab:
Remove the 10 screws and front door scuff plates.

(b) Access cab:
Remove the 8 screws and front door scuff plates.

3. Access cab:
REMOVE ACCESS DOOR SCUFF PLATES

Remove the 6 screws and access door scuff plates.

4. Access cab:
REMOVE FRONT DOOR REAR SCUFF PLATES

(a) Remove the 2 clips and 2 covers.

(b) Remove the 2 clips and 2 front door rear scuff plates.

5. REMOVE ASSIST GRIPS

(a) Using a screwdriver, remove the caps.

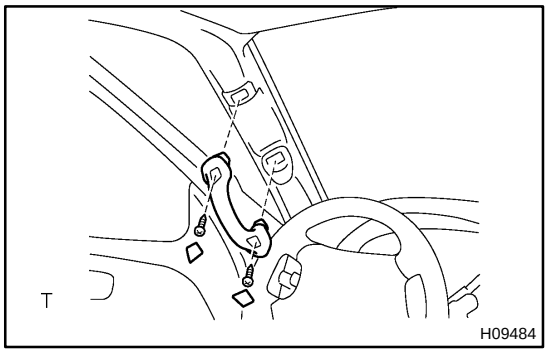

(b) Driver's side:
Using a torx driver (T30), remove the 2 screws and assist grip.

(c) Passenger's side:
Using a torx driver (T30), remove the 4 screws and 2 assist grips.

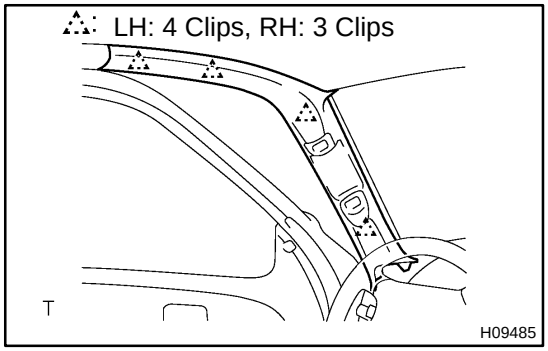

6. REMOVE FRONT PILLAR GARNISH

(a) Using a screwdriver, remove the front pillar garnish.

(b) Employ the same manner described above to the other side.

7. Access cab:
REMOVE FRONT SEAT OUTER BELT ANCHORS

(a) Remove the bolt and front seat outer belt floor anchor.
Torque: 42 N·m (430 kgf·cm, 31 ft·lbf)

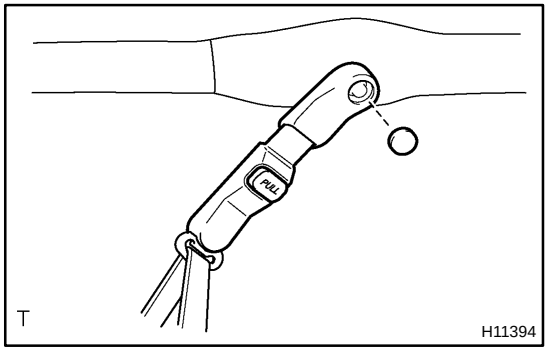

(b) Using a screwdriver, remove the cap.

(c) Remove the bolt and front seat outer belt shoulder anchor.
Torque: 42 N·m (430 kgf·cm, 31 ft·lbf)

(d) Employ the same manner described above to the other side.

8. Access cab:
REMOVE ROOF SIDE RAIL GARNISH

(a) Using a screwdriver, remove the caps.
(b) Using a torx driver (T30), remove the 2 screws and assist grip.

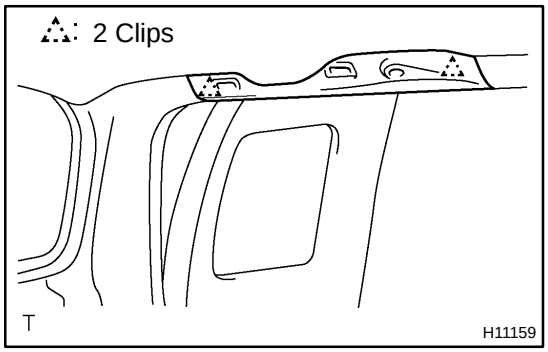

(c) Using a screwdriver, remove the roof side rail garnish.

9. REMOVE SUN VISORS

(a) Remove the 4 screws and 2 sun visors.
(b) w/ Light:
Disconnect the connector.

10. REMOVE SUB–VISORS

Remove the 4 screws and 2 sub–visors.

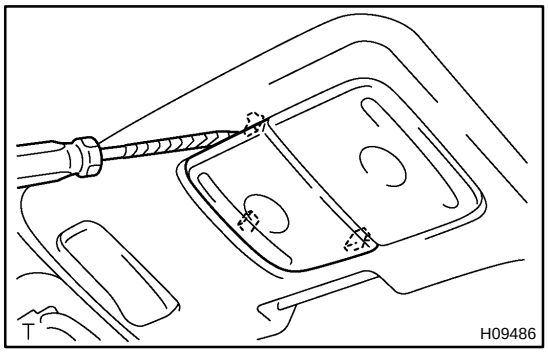

11. REMOVE FRONT PERSONAL LIGHT

(a) Using a screwdriver, remove the left side lens.

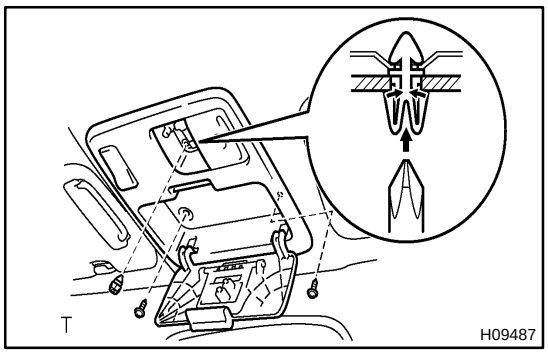

(b) Remove the 2 screws.
(c) Using a screwdriver, rotate the clip by 90° and remove it.
(d) Remove the front personal light, then disconnect the connector.

HINT:
At the time of installation, please refer to the following item.
When installing the front personal light, attach the clip to the housing and push it to the bracket.

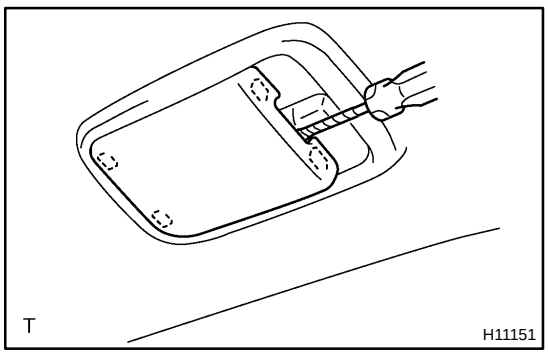

12. REMOVE ROOM LIGHT

(a) Using a screwdriver, remove the room light cover.
(b) Remove the 2 screws and room light, then disconnect the connector.

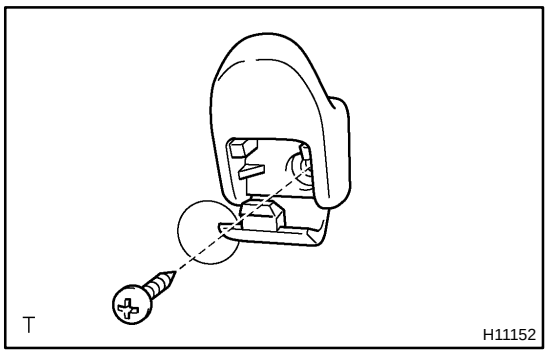

13. Standard cab:
REMOVE COAT HOOK

(a) Using a screwdriver, open the cap.

(b) Remove the screw and coat hook.

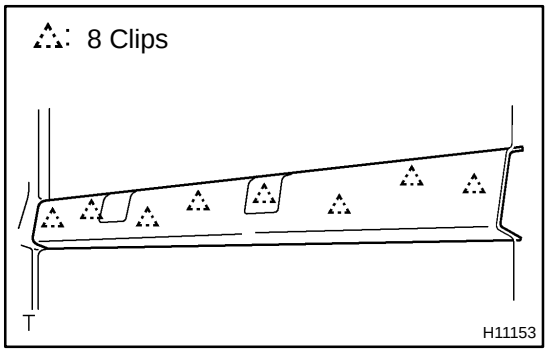

14. Standard cab:
REMOVE BACK PANEL UPPER GARNISH

Insert a screwdriver between the back panel upper garnish and body panel to remove the back panel upper garnish.

15. REMOVE QUARTER TRIM

(a) Standard cab:
Remove the bolt and front seat outer belt floor anchor.
Torque: 42 N·m (430 kgf·cm, 31 ft·lbf)

(b) Access cab:
Remove the bolt and rear seat outer belt floor anchor.
Torque: 42 N·m (430 kgf·cm, 31 ft·lbf)

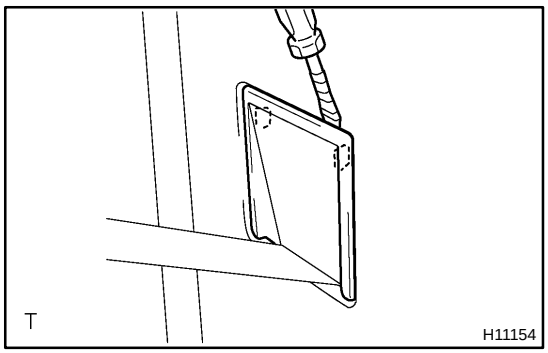

(c) Using a screwdriver, remove the quarter trim belt hole cover.

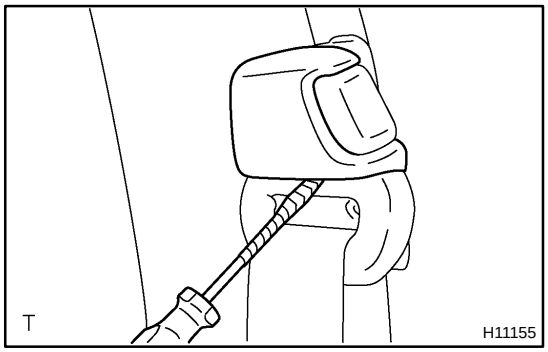

(d) Standard cab:
Using a screwdriver, remove the cap.

(e) Standard cab:
Unfasten the bolt and remove front seat outer belt shoulder anchor.
Torque: 42 N·m (430 kgf·cm, 31 ft·lbf)

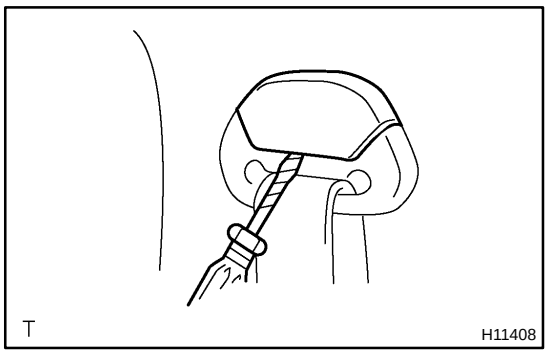

(f) Access cab:
Using a screwdriver, open the cap.

(g) Access cab:
Unfasten the bolt and remove rear seat outer belt shoulder anchor.
Torque: 42 N·m (430 kgf·cm, 31 ft·lbf)

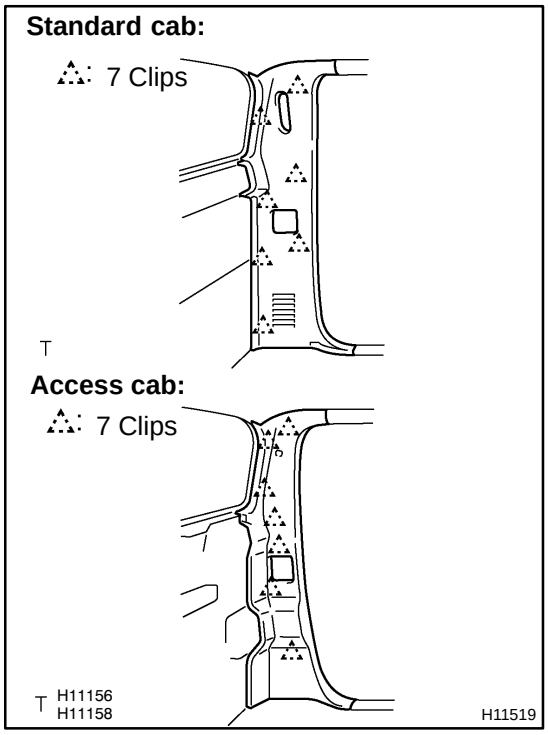

(h) Insert a screwdriver between the quarter trim and body panel to remove the quarter trim.

(i) Employ the same manner described above to the other side.

16. REMOVE ROOF HEADLINING

(a) Remove the 2 screws and 2 sun visor holders.

(b) Standard cab:
Remove the 2 clips and roof headlining.

(c) Access cab:
Remove the 3 clips and roof headlining.

BO2FA–02

INSTALLATION

Installation is in the reverse order of removal procedure (See page BO–85).

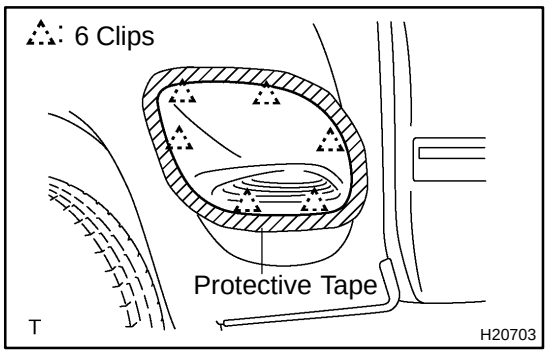

SIDE STEP

BO4H5–01

REPLACEMENT

REMOVE SIDE FRONT STEP

Using a screwdriver, remove the side front step.

HINT:

Tape the screwdriver tip before use.

NOTICE:

- **Do not damage the body.**
- **If the clips are damaged, exchange them for new clips.**

FRONT SEAT (Separate Type: Power Adjuster)

COMPONENTS

BO2FB–02

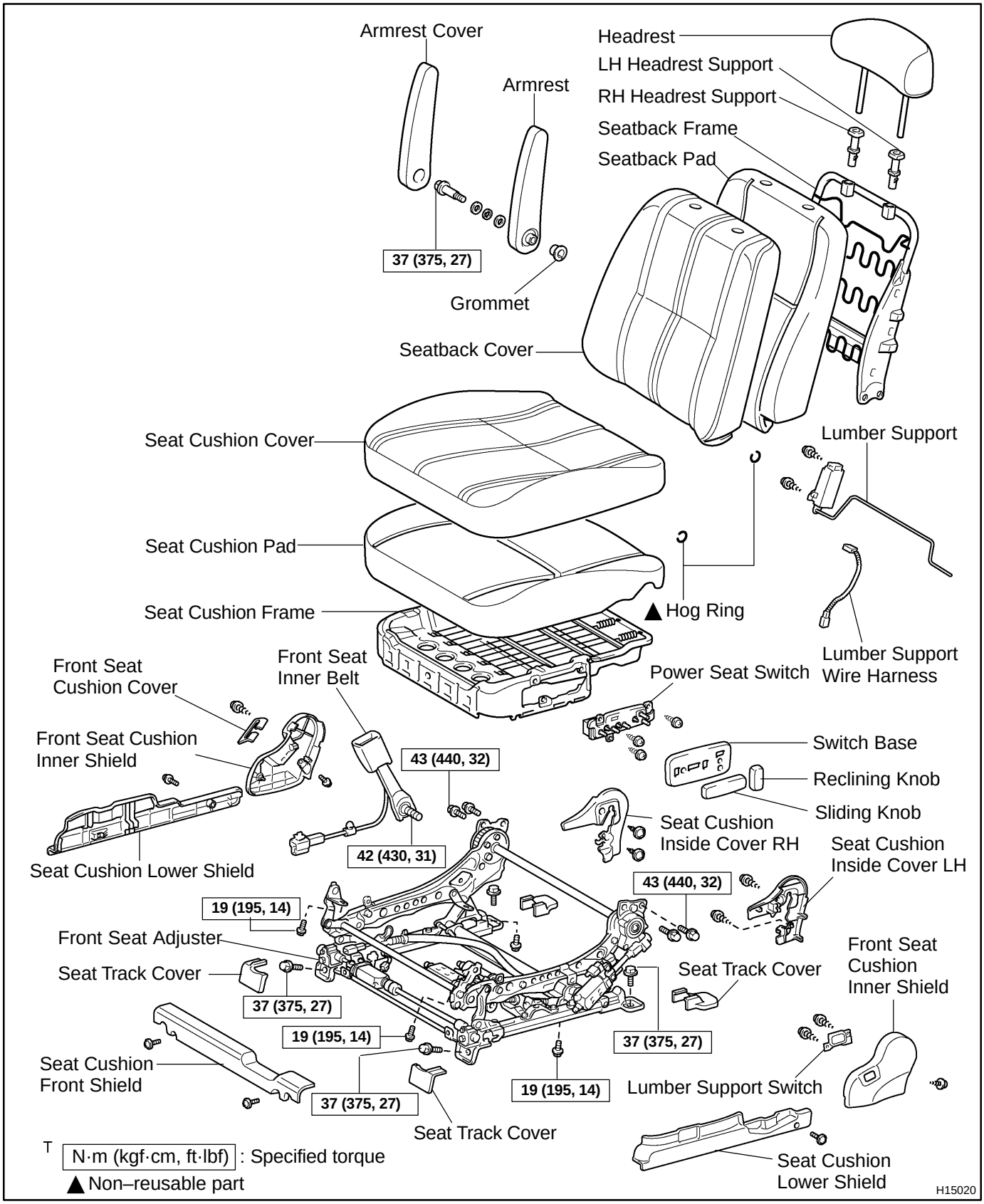

BO40P–01

DISASSEMBLY

HINT:

Tape the screwdriver tip before using it to remove the parts.

1. REMOVE FRONT SEAT

(a) Remove the 4 seat track covers and 4 bolts.

(b) Disconnect the connector and remove the front seat.

2. REMOVE HEADREST

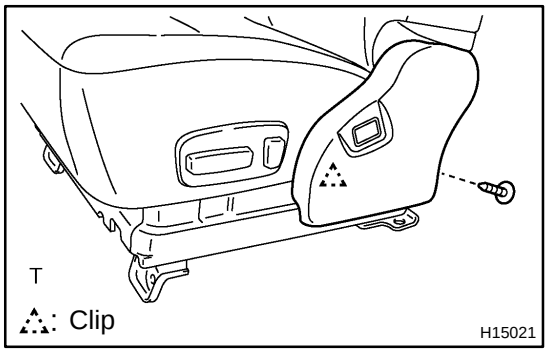

3. REMOVE FRONT SEAT CUSHION SHIELD

(a) Remove the screw and front seat cushion shield and disconnect the lumber support switch connector.

(b) Remove the 2 screws and lumber support switch.

4. REMOVE SLIDE KNOB AND RECLINING KNOB

Using a screwdriver, remove the slide knob and reclining knob.

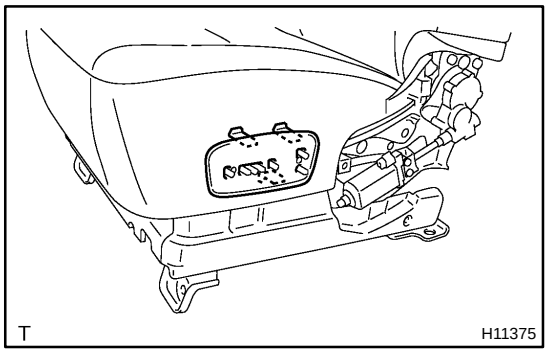

5. REMOVE SWITCH BASE

Using a screwdriver, remove the switch base.

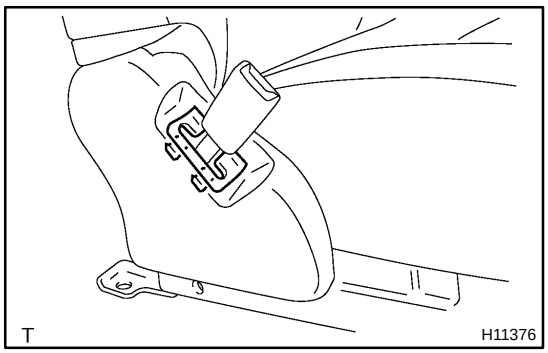

6. REMOVE FRONT SEAT CUSHION COVER

Using a screwdriver, remove the front seat cushion cover.

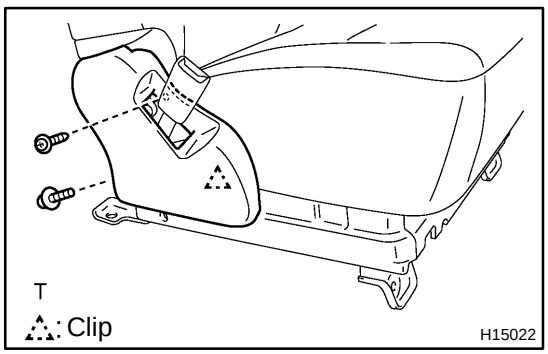

7. REMOVE FRONT SEAT CUSHION INNER SHIELD

Remove the 2 screws and front seat cushion inner shield.

8. REMOVE FRONT SEAT INNER BELT

Remove the bolt and front seat inner belt and disconnect the connector.

Torque: 42 N·m (430 kgf·cm, 31 ft·lbf)

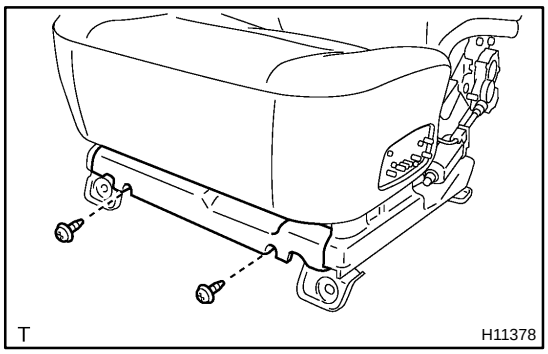

9. REMOVE SEAT CUSHION FRONT SHIELD

Remove the 2 screws and seat cushion front shield.

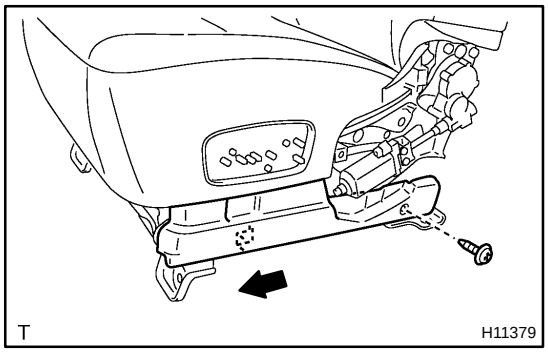

10. REMOVE SEAT CUSHION LOWER SHIELD

(a) Remove the screw.

(b) Remove the seat cushion lower shield as shown in the illustration.

(c) Employ the same manner described above to the other side.

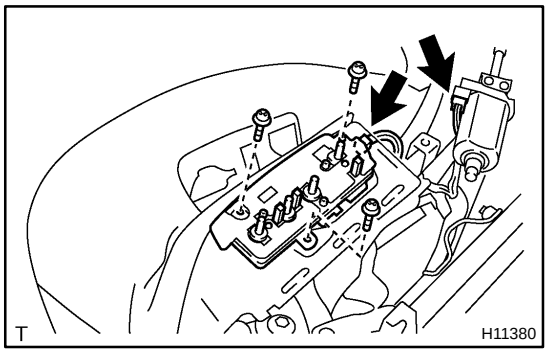

11. REMOVE POWER SEAT SWITCH

(a) Unlatch the front portion of seat cushion cover hook.

(b) Turn over the left part of seat cushion cover.

(c) Remove the 3 screws.

(d) Disconnect the 2 connectors and remove the power seat switch.

12. REMOVE SEAT CUSHION ASSEMBLY

(a) Disconnect the connector.

(b) Remove the 4 bolts and seat cushion assembly.

Torque: 19 N·m (195 kgf·cm, 14 ft·lbf)

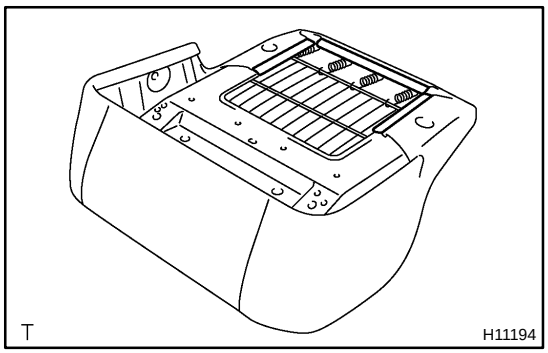

13. REMOVE SEAT CUSHION COVER

(a) Unlatch the seat cushion cover hooks, then remove the seat cushion frame from the seat cushion cover with pad.

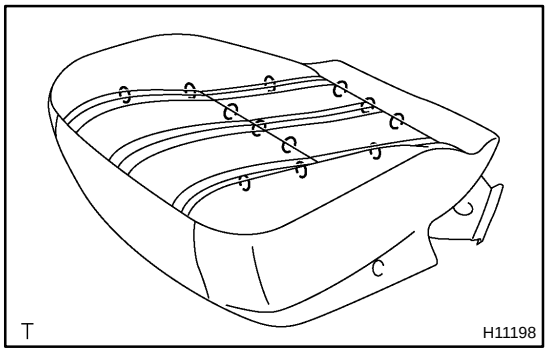

(b) Remove the 12 hog rings and seat cushion cover from the seat cushion pad.

HINT:

At the time of reassembly, please refer to the following item.

When installing hog rings, take care to prevent wrinkles as little as possible.

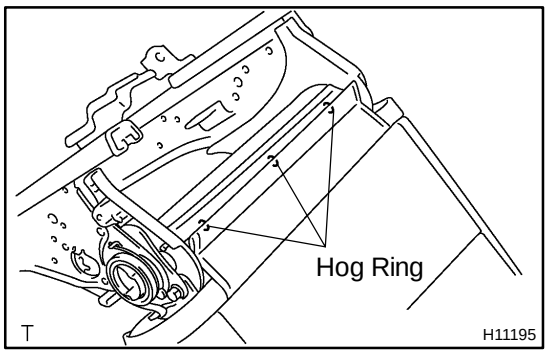

14. REMOVE SEATBACK ASSEMBLY

(a) Remove the 3 hog rings as shown in the illustration.

HINT:

At the time of reassembly, please refer to the following item.

When installing hog rings, take care to prevent wrinkles as little as possible.

(b) Disconnect the lumber support connector.

(c) Remove the 4 bolts and seatback assembly.

Torque: 43 N·m (440 kgf·cm, 32 ft·lbf)

15. REMOVE ARMREST

(a) Open the fastener.

(b) Remove the bolt, 3 washer, grommet and armrest.

Torque: 37 N·m (375 kgf·cm, 27 ft·lbf)

(c) Remove the armrest cover.

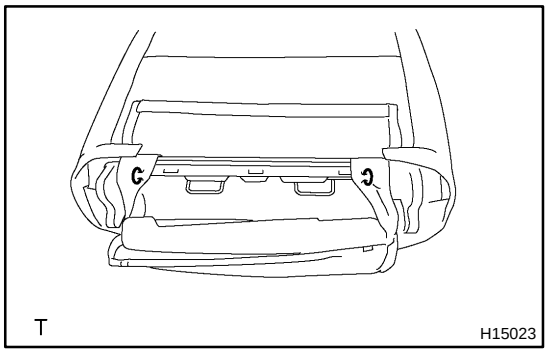

16. REMOVE SEATBACK FRAME

(a) Remove the 2 hog rings as shown in the illustration.

(b) Turn over the seatback cover upward.

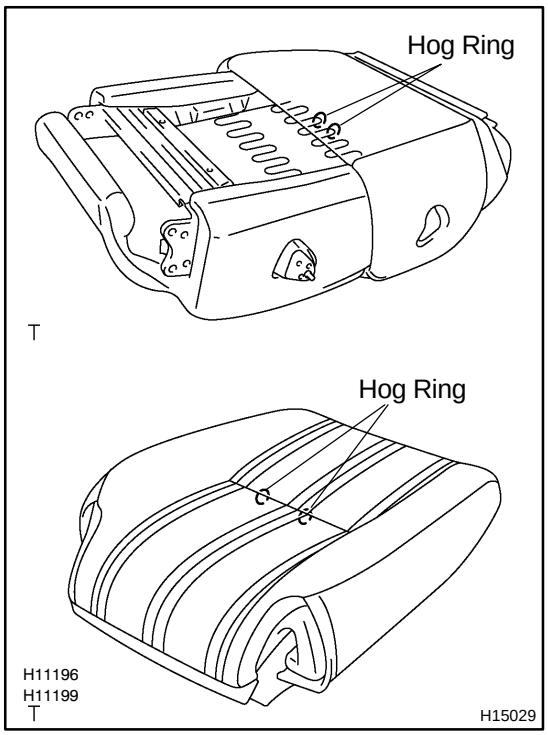

(c) Remove the 4 hog rings as shown in the illustration.

HINT:

At the time of reassembly, please refer to the following item.

When installing hog rings, take care to prevent wrinkles as little as possible.

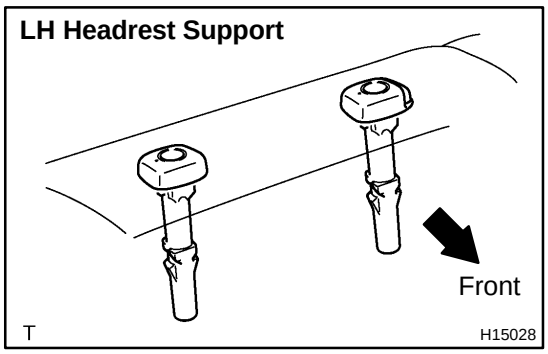

(d) Remove the 2 headrest supports and seatback cover from the seatback pad with the frame.

HINT:

At the time of reassembly, do not mistake the direction of the headrest support with the button.

(e) Remove the seatback frame from the seatback pad.

17. REMOVE LUMBER SUPPORT

(a) Disconnect the lumber support connector.

(b) Remove the 2 screw and lumber support.

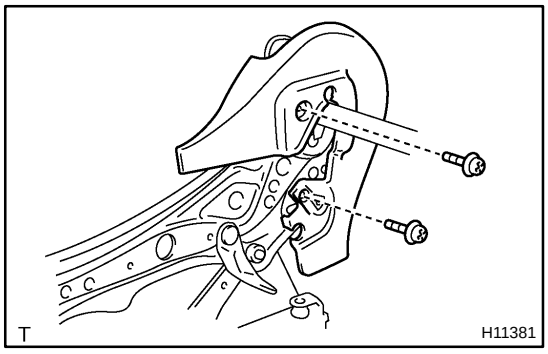

18. REMOVE SEAT CUSHION INSIDE COVER

(a) Remove the 2 screws and seat cushion inside cover.

(b) Employ the same manner described above to the other side.

REASSEMBLY

Reassembly is in the reverse order of disassembly (See page BO–92).

FRONT SEAT (Separate Type: Manual Adjuster)

BO2FG–02

COMPONENTS

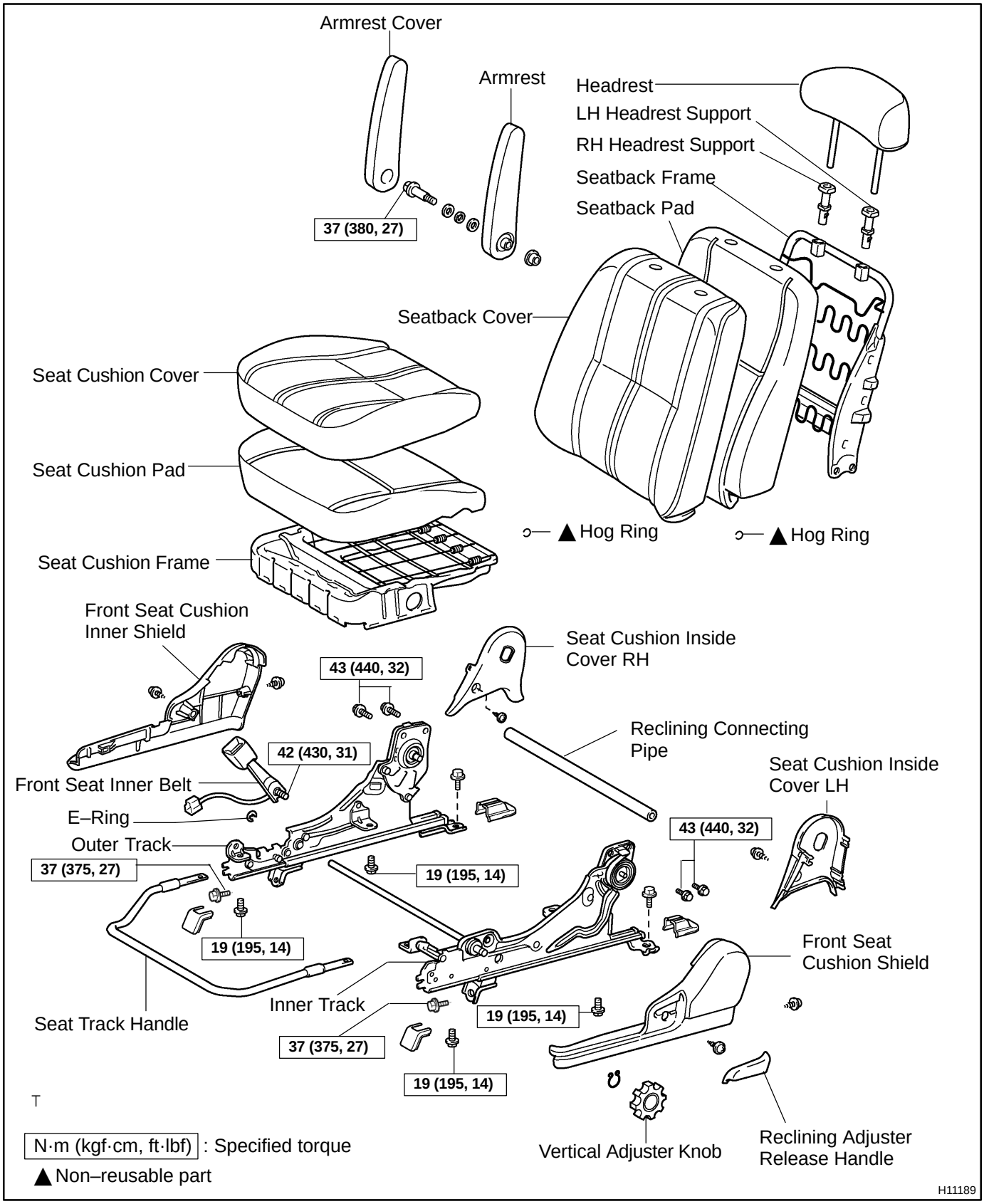

BO40Q–01

DISASSEMBLY

HINT:

Tape the screwdriver tip before using it to remove the parts.

1. REMOVE FRONT SEAT

(a) Remove the 4 seat track covers and 4 bolts.

(b) Disconnect the connector and remove the front seat.

2. REMOVE HEADREST

3. REMOVE VERTICAL ADJUSTER KNOB

Using a screwdriver, remove the snap ring and vertical adjuster knob.

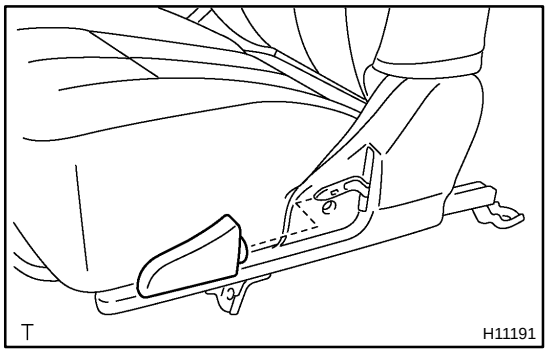

4. REMOVE RECLINING ADJUSTER RELEASE HANDLE

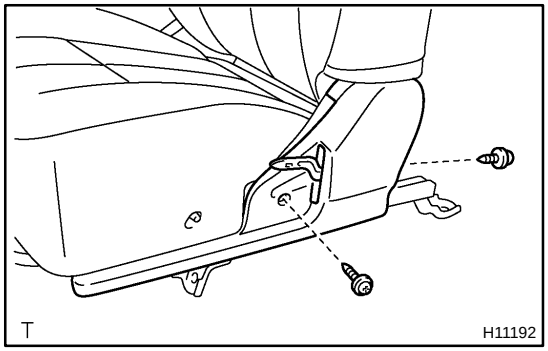

5. REMOVE FRONT SEAT CUSHION SHIELD

Remove the 2 screws and front seat cushion shield.

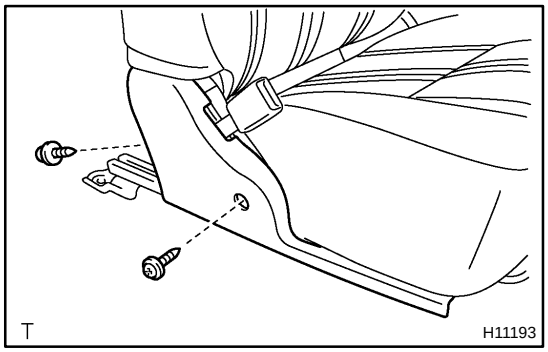

6. REMOVE FRONT SEAT CUSHION INNER SHIELD

Remove the 2 screws and front seat cushion inner shield.

7. REMOVE FRONT SEAT INNER BELT

Unfasten the bolt and front seat inner belt.

8. REMOVE SEAT CUSHION ASSEMBLY

Remove the 4 bolts and seat cushion assembly.

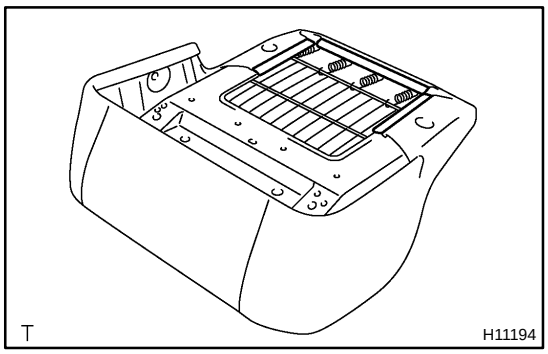

9. REMOVE SEAT CUSHION COVER

(a) Unlatch the seat cushion cover hooks, then remove the seat cushion frame from seat cushion cover with pad.

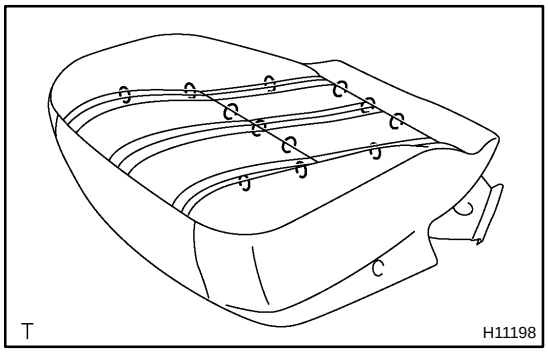

(b) Remove the 12 hog rings and seat cushion cover from the seat cushion pad.

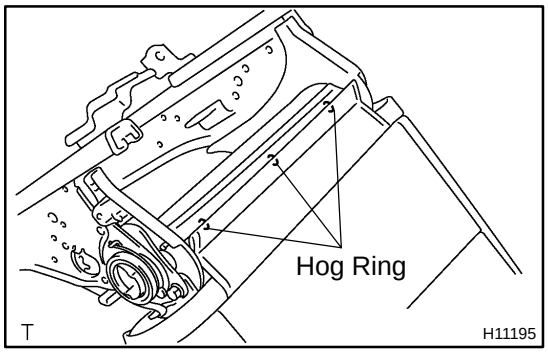

10. REMOVE SEATBACK ASSEMBLY

(a) Remove the 3 hog rings shown in the illustration.

(b) Remove the 4 bolts and seatback assembly.

11. REMOVE ARMREST

(a) Open the fastener.

(b) Remove the bolt and armrest.

(c) Remove the armrest cover.

12. REMOVE SEATBACK FRAME

(a) Turn over the seatback cover upward.

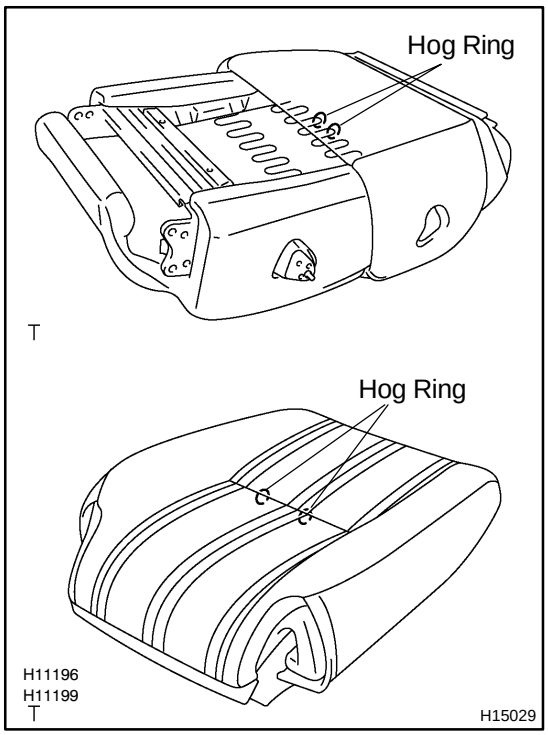

(b) Remove the 4 hog rings as shown in the illustration.

(c) Remove the 2 headrest supports and seatback cover from the seatback pad with the frame.

(d) Remove the seatback frame from the seatback pad.

13. REMOVE SEAT TRACK HANDLE

Using a screwdriver, remove the seat track handle.

14. DISASSEMBLE OUTER TRACK AND INNER TRACK

(a) Using a screwdriver, remove the E–ring from the outer side on the inner track.

(b) Disassemble the outer track and inner track.

15. REMOVE RECLINING CONNECTING PIPE

16. REMOVE SEAT CUSHION INSIDE COVERS

(a) Remove the screw and seat cushion inside cover RH.

(b) Remove the screw and seat cushion inside cover LH.

BO2FK–02

REASSEMBLY

1. INSTALL SEAT CUSHION INSIDE COVERS

(a) Install the seat cushion inside cover RH with the screw.

(b) Install the seat cushion inside cover LH with the screw.

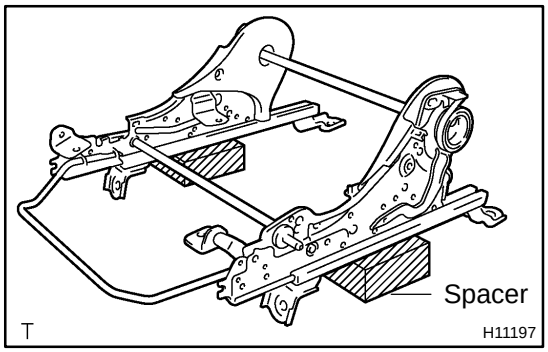

2. INSTALL RECLINING CONNECTING PIPE

(a) Adjust the reclining lock positions of the seat adjusters.

(b) Slide the seat adjusters to the most front position.

(c) Place the adjusters on a spacer to adjust the seat rails in parallel and install the connecting pipe.

HINT:

When installing the connecting pipe while raising up the adjusters, the lock positions adjusted in 2–(a) step slip off then lock error will occur.

3. ASSEMBLE OUTER TRACK AND INNER TRACK

(a) Assemble the outer track and inner track.

(b) Install the E–ring to the outer side on the inner track.

4. INSTALL SEAT TRACK HANDLE

5. INSTALL SEATBACK FRAME

(a) Install the seatback frame to the seatback pad.

(b) Put the seatback cover on the seatback frame with pad.

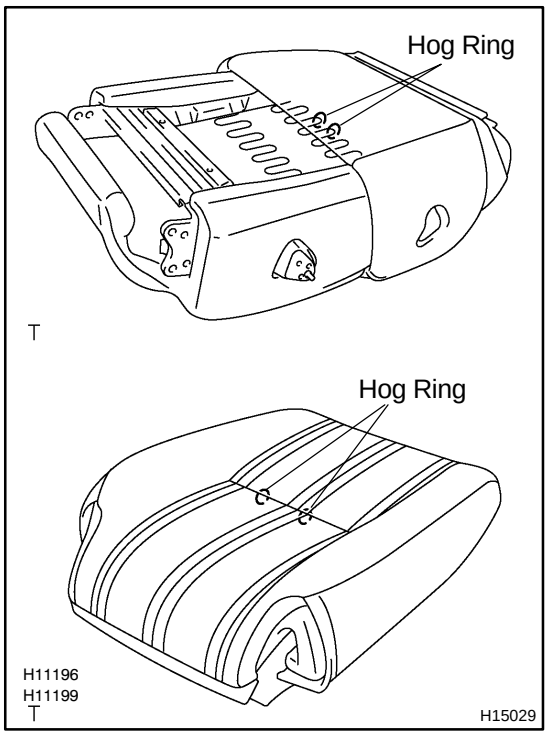

(c) Install the 4 hog rings as shown in the illustration.

HINT:

When installing hog rings, take care to prevent wrinkles as little as possible.

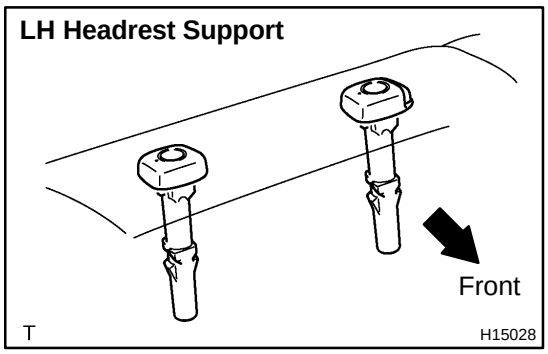

(d) Install the 2 headrest supports.

HINT:

Do not mistake the direction of the LH headrest support with the button.

6. INSTALL ARMREST

(a) Install the armrest cover.

(b) Install the armrest with the bolt.

Torque: 37 N·m (375 kgf·cm, 27 ft·lbf)

(c) Close the fastener.

7. INSTALL SEATBACK ASSEMBLY

(a) Install the seatback assembly with the 4 bolts.

Torque: 43 N·m (440 kgf·cm, 32 ft·lbf)

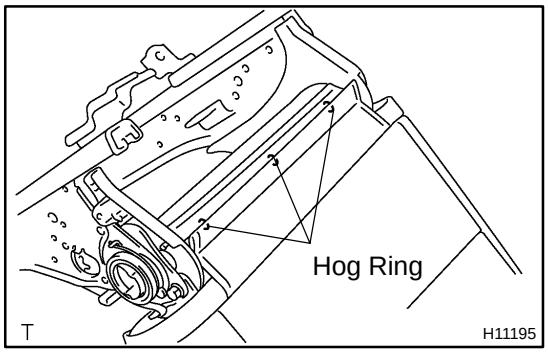

(b) Install 3 new hog rings as shown in the illustration.

HINT:

When installing hog rings, take care to prevent wrinkles as little as possible.

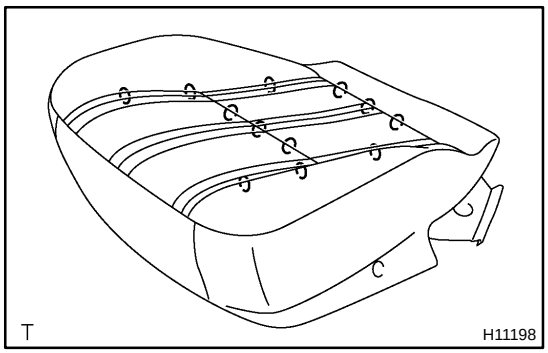

8. INSTALL SEAT CUSHION COVER

(a) Install the seat cushion cover with new hog rings to the seat cushion pad.

HINT:

When installing hog rings, take care to prevent wrinkles as little as possible.

(b) Install the seat cushion frame to the seat cushion pad with cover.

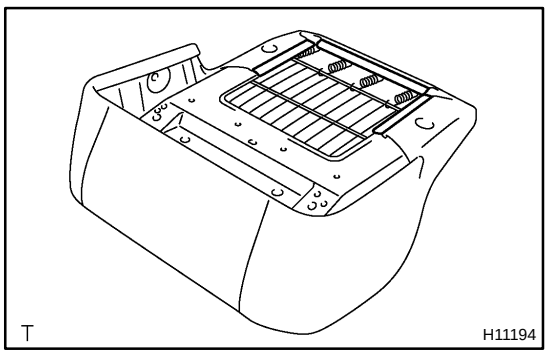

(c) Latch the seat cushion cover hooks.

9. INSTALL SEAT CUSHION ASSEMBLY

Install the seat cushion assembly with the 4 bolts.

Torque: 19 N·m (195 kgf·cm, 14 ft·lbf)

10. INSTALL FRONT SEAT INNER BELT

Install the front seat inner belt with the bolt.

Torque: 41 N·m (420 kgf·cm, 30 ft·lbf)

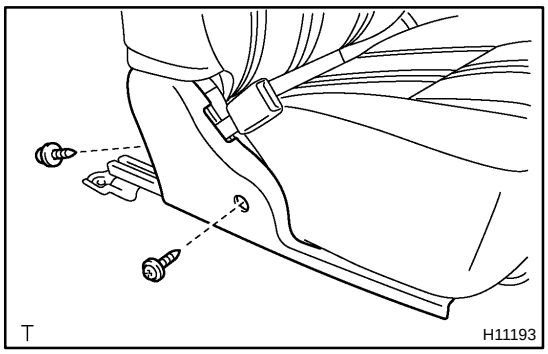

11. INSTALL FRONT SEAT CUSHION INNER SHIELD

Install the front seat cushion inner shield with the 2 screws.

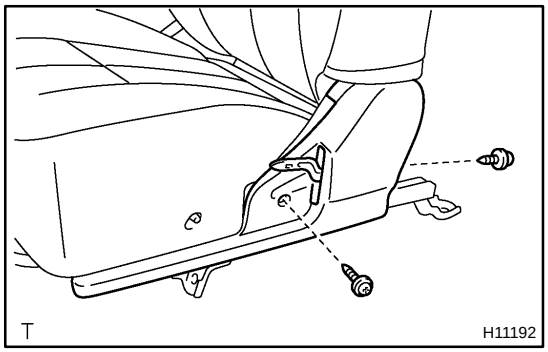

12. INSTALL FRONT SEAT CUSHION OUTER SHIELD

Install the front seat cushion outer shield with the 2 screws.

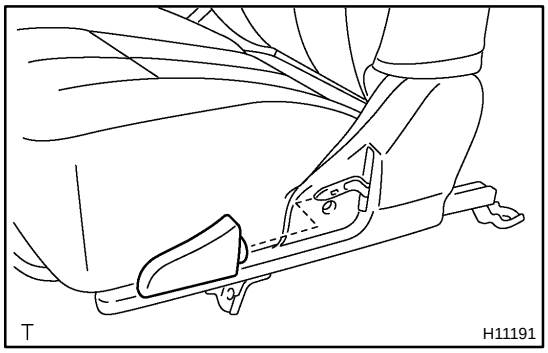

13. INSTALL RECLINING RELEASE LEVER

14. INSTALL VERTICAL ADJUSTER KNOB

Install the vertical adjuster knob with the snap ring.

15. INSTALL HEADREST

16. CHECK SLIDING LOCK POSITION

Check that the outer and inner tracks are locked at the same position.

If the sliding lock positions slip off, pull the sliding seat lever and slide the inner and outer tracks at the same sliding lock positions.

17. INSTALL FRONT SEAT

(a) Put the seat on the vehicle and connect the connector.

(b) Install the 4 bolts and 4 seat track covers.

Torque: 37 N·m (375 kgf·cm, 27 ft·lbf)

FRONT SEAT (Bench Type)

COMPONENTS

BO0JS–05

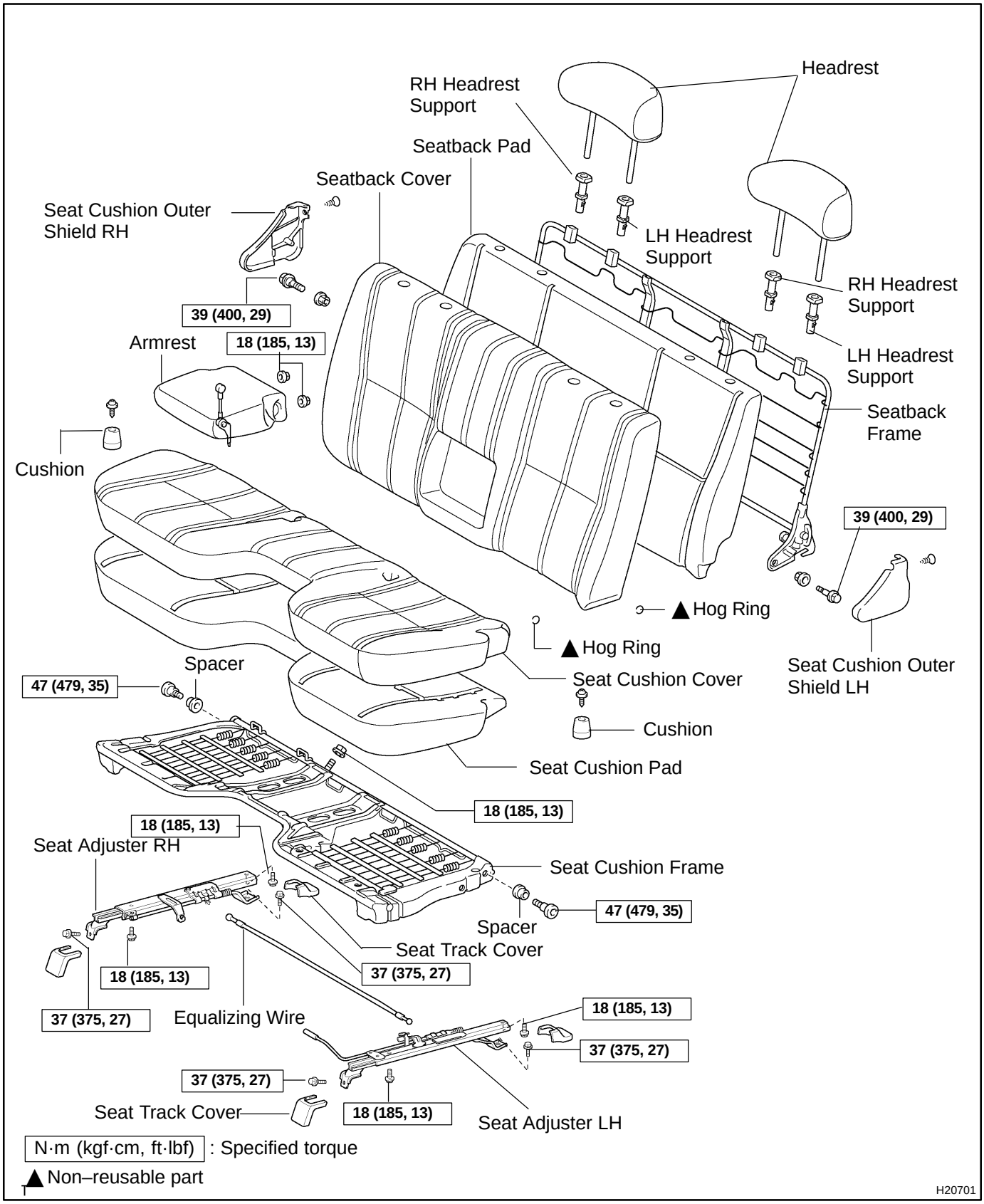

BO2FN–03

DISASSEMBLY

1. REMOVE FRONT SEAT

(a) Remove the 4 seat track covers and 4 bolts.

(b) Disconnect the 4 connectors and remove the front seat.

2. REMOVE HEADRESTS

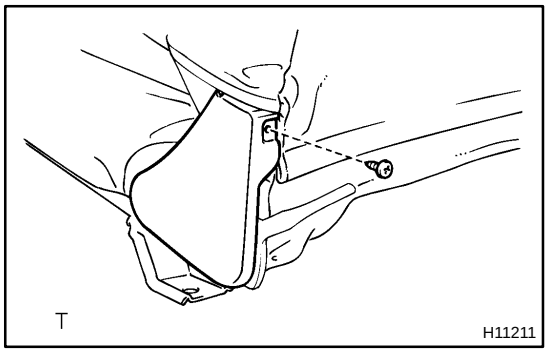

3. REMOVE SEAT CUSHION OUTER SHIELD

Remove the screw and seat cushion outer shield.

4. REMOVE SEAT CUSHION INNER SHIELD

Remove the screw and seat cushion inner shield.

5. REMOVE SEATBACK ASSEMBLY

(a) Remove the nut from rear side of the seat cushion.

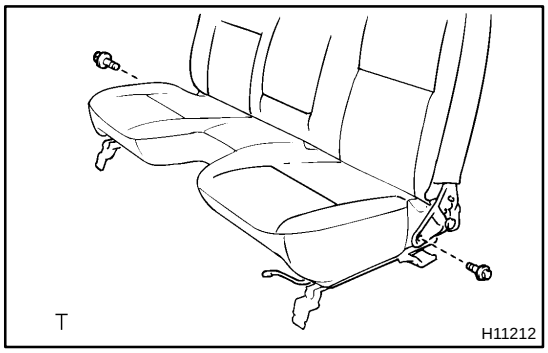

(b) Remove the 2 bolts and seatback assembly.

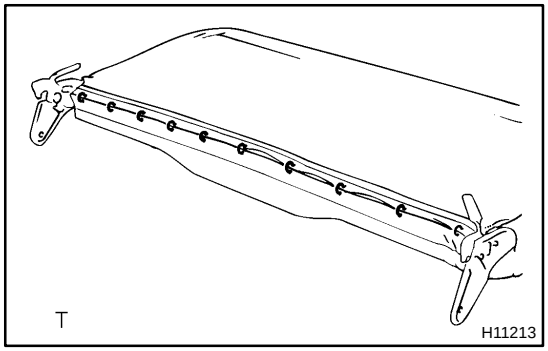

6. REMOVE ARMREST

(a) Remove the hog rings and turn over the seatback cover.

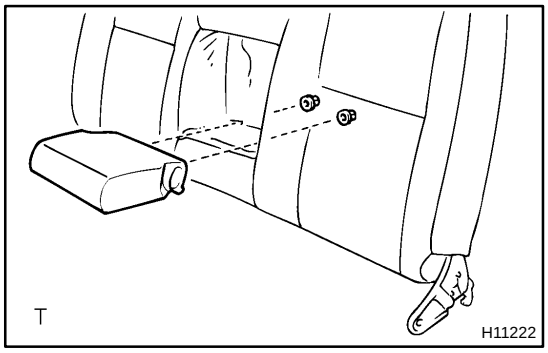

(b) Remove the 2 nuts and armrest from the seatback frame.

7. REMOVE SEATBACK FRAME

(a) Remove the 4 headrest supports and seatback cover from the seatback pad with the frame.

(b) Remove the seatback frame from the seatback pad.

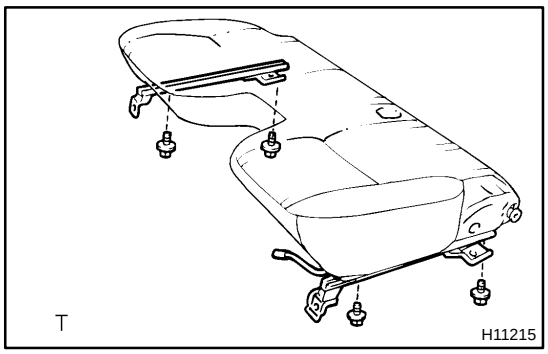

8. REMOVE SEAT CUSHION ASSEMBLY

Remove the 4 bolts and seat cushion assembly from the seat adjusters.

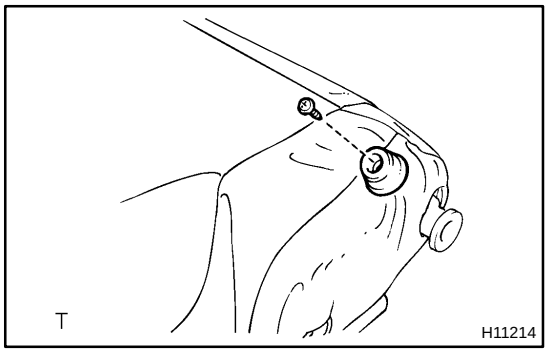

9. REMOVE SEAT CUSHION FRAME

(a) Remove the screw and cushion.

(b) Employ the same manner described above to the other side.

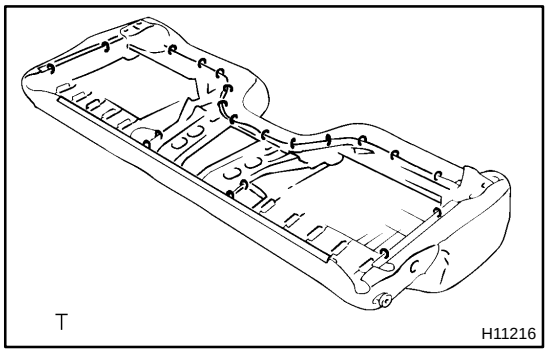

(c) Remove the hog rings and unlatch the seat cushion cover.

(d) Remove the seat cushion frame from the seat cushion cover with pad.

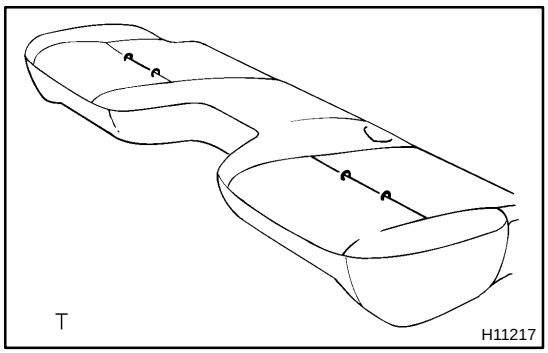

10. REMOVE SEAT CUSHION COVER

Remove the hog rings and seat cushion cover from seat cushion pad.

11. REMOVE SPACERS

Remove the 2 bolts and 2 spacers from the seat cushion frame.

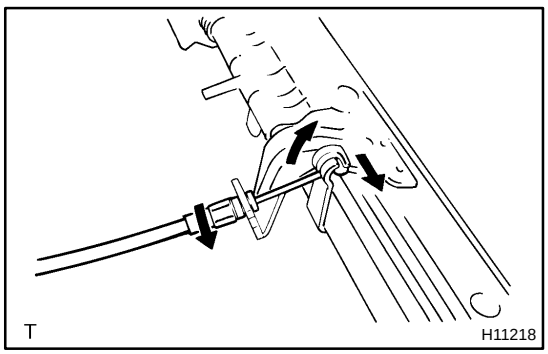

12. REMOVE EQUALIZING WIRE

(a) Disconnect the equalizing wire from the seat adjuster LH as shown in the illustration.

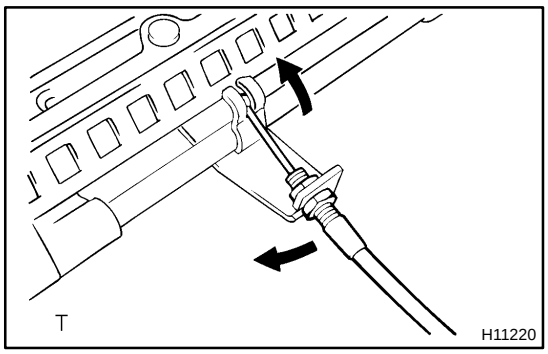

(b) Using a screwdriver, unstake the claws.

HINT:

Tape the screwdriver tip before use.

(c) Loosen the adjusting nuts.

HINT:

When loosening the nuts, while holding one nut, loosen the other.

(d) Disconnect the equalizing wire from the seat adjuster RH as shown in the illustration.

BO40R–02

REASSEMBLY

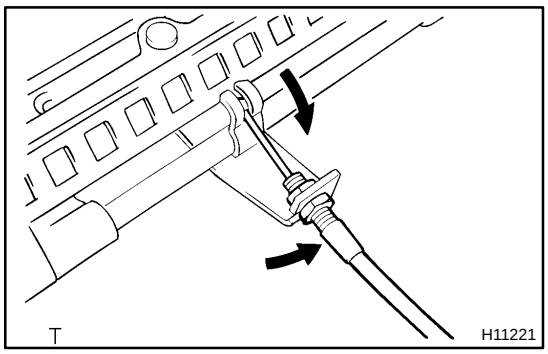

1. INSTALL EQUALIZING WIRE

(a) Connect the equalizing wire to the seat adjuster RH as shown in the illustration.

(b) Tighten the adjusting nuts.

HINT:

When tighten the nuts, while holding one nuts, tighten the other.

(c) Stake the claws.

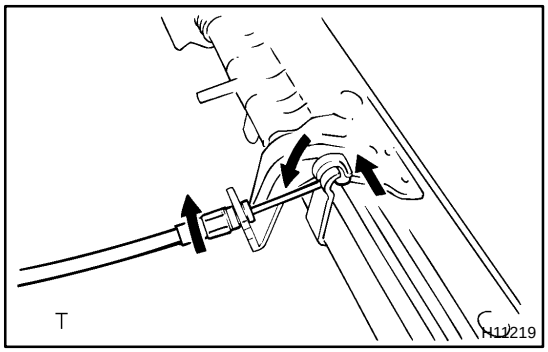

(d) Connect the equalizing wire to the seat adjuster LH as shown in the illustration.

2. INSTALL SPACERS

Install the 2 spacers with the 2 bolts to the seat cushion frame.

Torque: 47 N·m (479 kgf·cm, 35 ft·lbf)

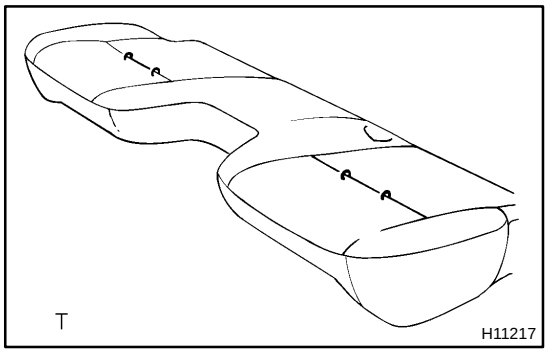

3. INSTALL SEAT CUSHION COVER

Install the seat cushion cover with new hog rings to the seat cushion pad.

HINT:

When installing hog rings, take care to prevent wrinkles as little as possible.

4. INSTALL SEAT CUSHION FRAME

(a) Install the seat cushion frame to the seat cushion cover with pad.

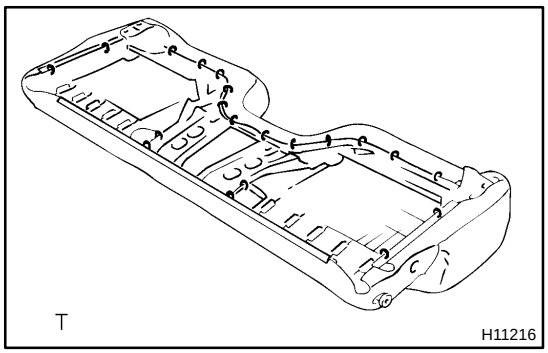

(b) Install the seat cushion frame with new hog rings and latch the seat cushion cover hooks.

HINT:

When installing hog rings, take care to prevent wrinkles as little as possible.

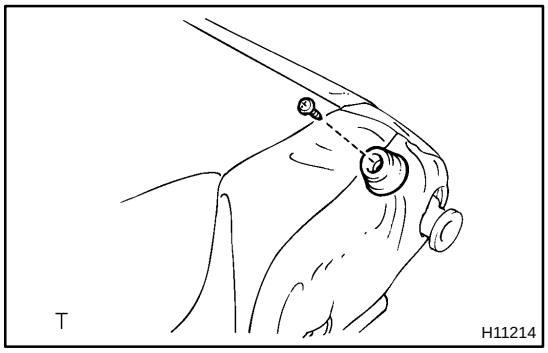

(c) Install the cushion with the screw.

HINT:

Employ the same manner described above to the other side.

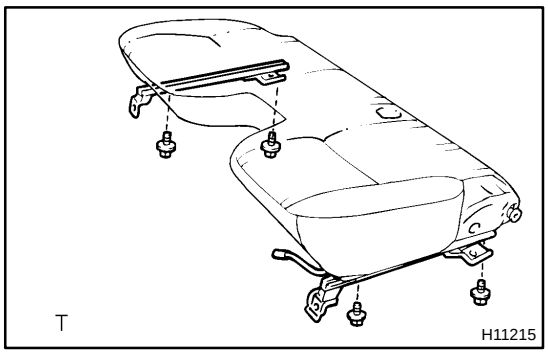

5. INSTALL SEAT CUSHION ASSEMBLY

Install the seat cushion assembly with the 4 bolts to the seat adjusters.

Torque: 18 N·m (185 kgf·cm, 13 ft·lbf)

6. INSTALL SEATBACK FRAME

(a) Install the seatback frame to the seatback pad.

(b) Install the seatback cover to the seatback pad with the frame.

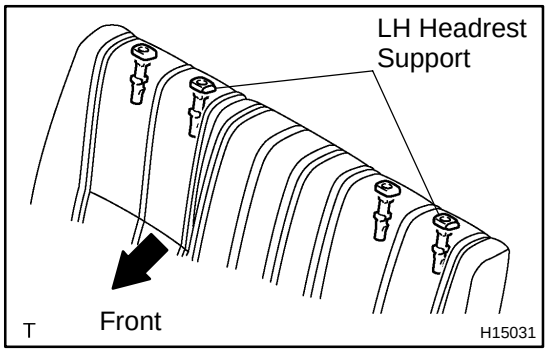

(c) Install the 4 headrest supports.

HINT:

Do not mistake the direction of the 2 LH headrest supports with the button.

(d) Install the seatback cover with new hog rings to the seatback pad.

HINT:

When installing hog rings, take care to prevent wrinkles as little as possible.

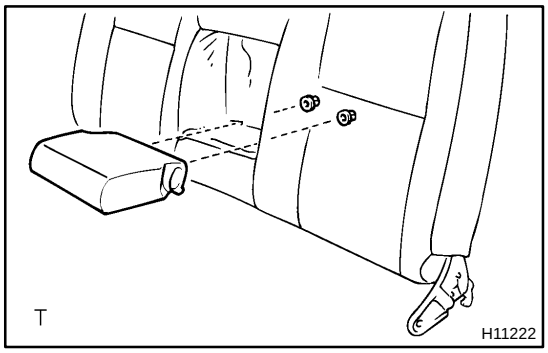

7. INSTALL ARMREST

(a) Install the armrest with the 2 nuts.

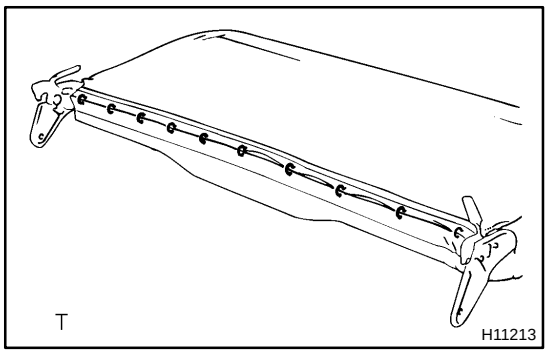

(b) Install the new hog rings as shown in the illustration.

HINT:

When installing hog rings, take care to prevent wrinkles as little as possible.

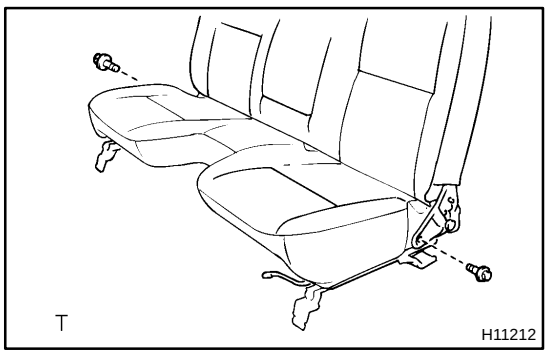

8. INSTALL SEATBACK ASSEMBLY

(a) Install the seatback assembly with the 2 bolts.

Torque: 39 N·m (400 kgf·cm, 29 ft·lbf)

(b) Install the nut to the rear side of the seat cushion.

Torque: 18 N·m (185 kgf·cm, 13 ft·lbf)

9. INSTALL SEAT CUSHION INNER SHIELD

Install the seat cushion inner shield with the screw.

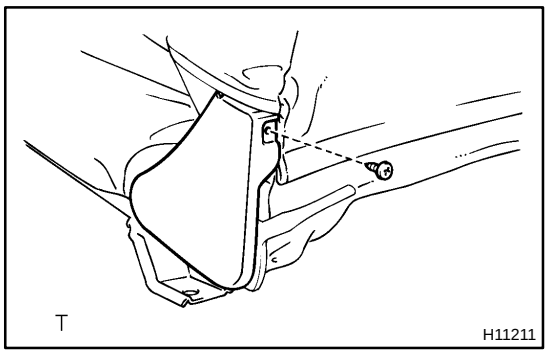

10. INSTALL SEAT CUSHION OUTER SHIELD

Install the seat cushion outer shield with the screw.

11. INSTALL HEADRESTS

12. CHECK SLIDING LOCK POSITION

Check that the outer and inner tracks are locked at the same position.

If the sliding lock positions slip off, pull the sliding seat lever and slide the inner and outer tracks at the same sliding lock positions.

13. INSTALL FRONT SEAT

(a) Put the seat on the vehicle and connect the 4 connectors.

(b) Install the 4 bolts and 4 seat track covers.

Torque: 37 N·m (375 kgf·cm, 27 ft·lbf)

FRONT SEAT (Split Type: Driver's Side)

BO0JY–03

COMPONENTS

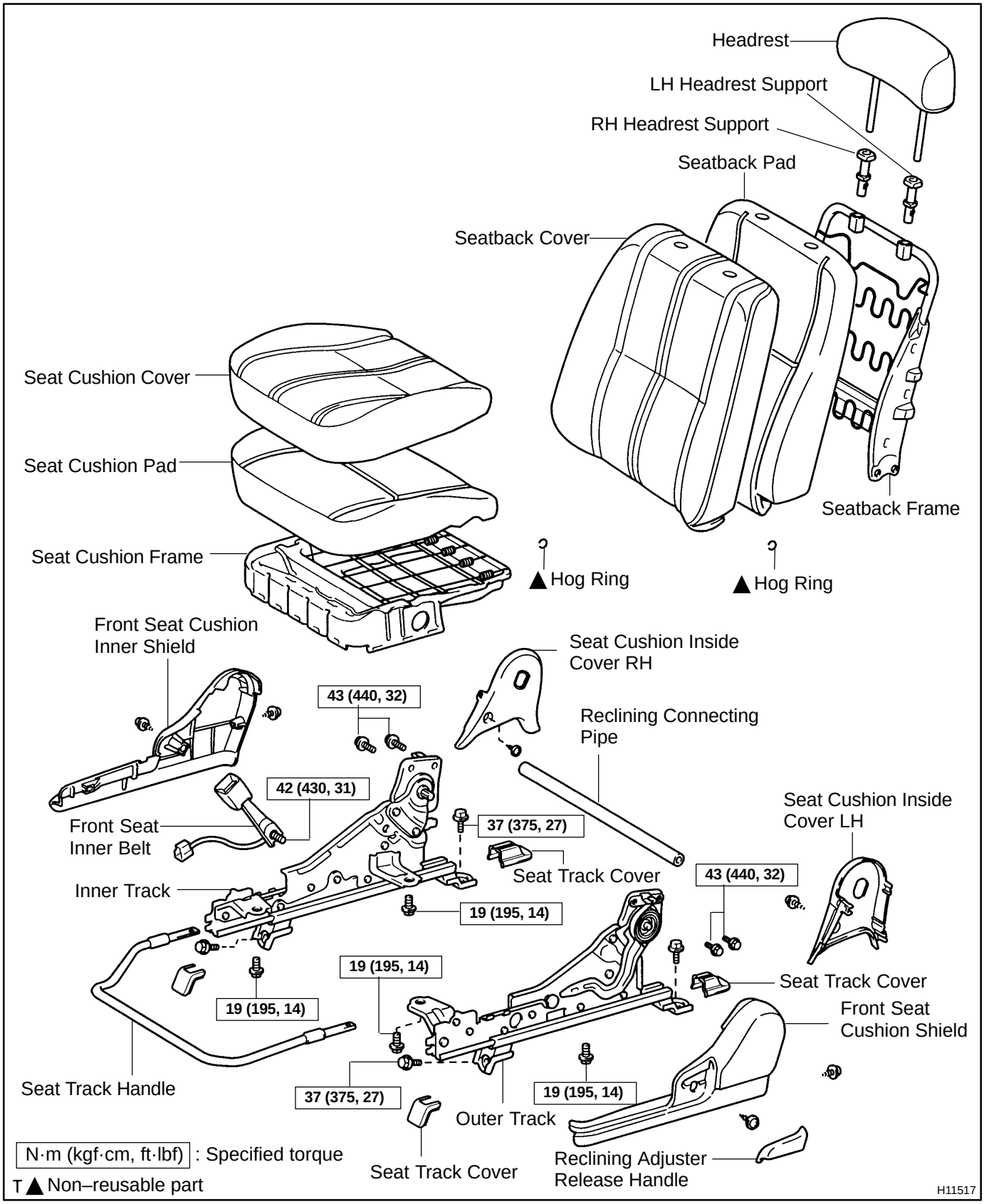

BO40S–01

DISASSEMBLY

1. REMOVE FRONT SEAT

(a) Remove the 4 seat track covers and 4 bolts.

(b) Disconnect the connector and remove the front seat.

2. REMOVE HEADREST

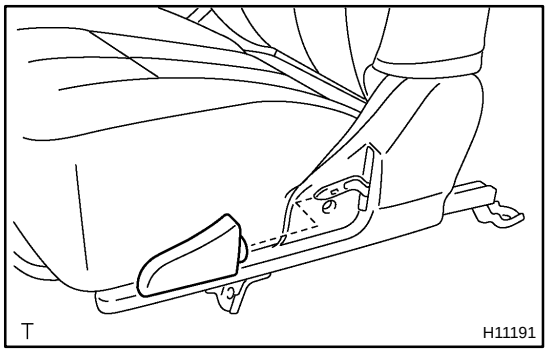

3. REMOVE RECLINING ADJUSTER RELEASE HANDLE

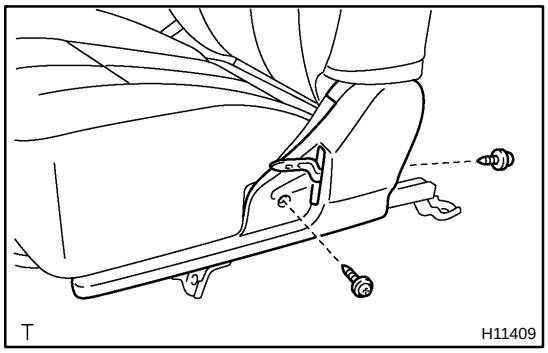

4. REMOVE FRONT SEAT CUSHION SHIELD

Remove the 2 screws and front seat cushion shield.

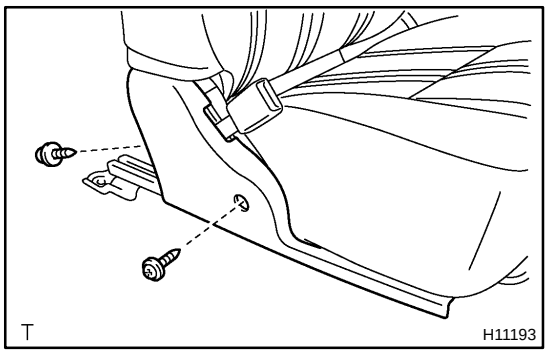

5. REMOVE FRONT SEAT CUSHION INNER SHIELD

Remove the 2 screws and front seat cushion inner shield.

6. REMOVE FRONT SEAT INNER BELT

Unfasten the bolt and front seat inner belt.

7. REMOVE SEAT CUSHION ASSEMBLY

Remove the 4 bolts and seat cushion assembly.

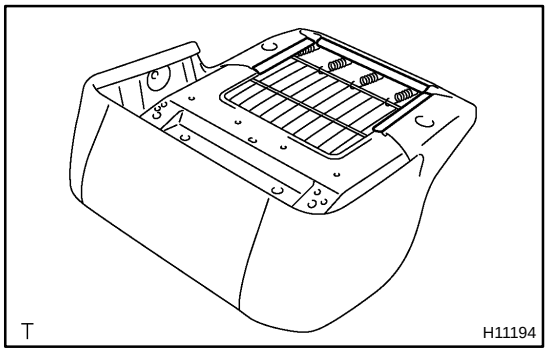

8. REMOVE SEAT CUSHION COVER

(a) Unlatch the seat cushion cover hooks, then remove the seat cushion frame from the seat cushion cover with pad.

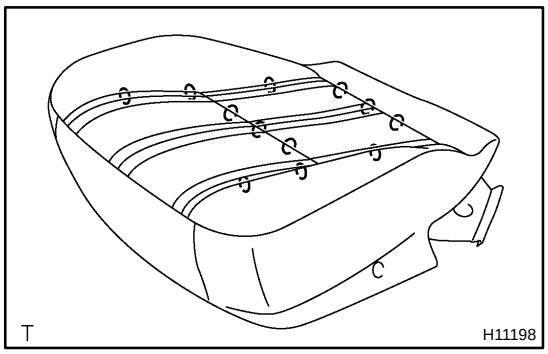

(b) Remove the 12 hog rings and seat cushion cover from the seat cushion pad.

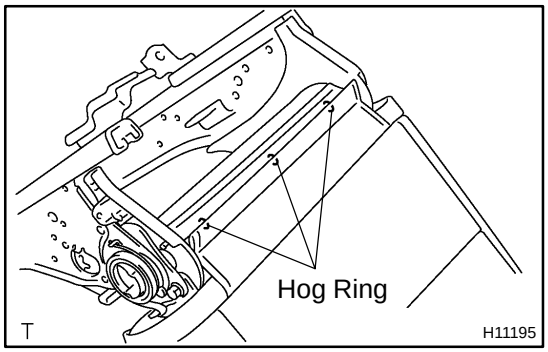

9. REMOVE SEATBACK ASSEMBLY

(a) Remove the 3 hog rings as shown in the illustration.

(b) Remove the 4 bolts and seatback assembly.

10. REMOVE SEATBACK FRAME

(a) Turn over the seatback cover upward.

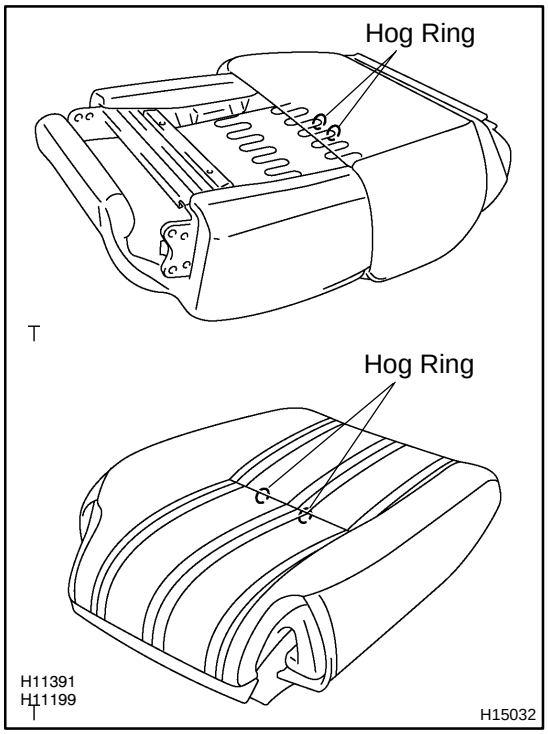

(b) Remove the 4 hog rings as shown in the illustration.

(c) Remove the 2 headrest supports and seatback cover from the seatback pad with frame.

(d) Remove the seatback frame from the seatback pad.

11. REMOVE SEAT TRACK HANDLE

Using a screwdriver, remove the seat track handle.

HINT:

Tape the screwdriver tip before use.

12. REMOVE RECLINING CONNECTING PIPE

13. REMOVE SEAT CUSHION INSIDE COVERS

(a) Remove the screw and seat cushion inside cover RH.

(b) Remove the screw and seat cushion inside cover LH.

BO2FS–02

REASSEMBLY

1. INSTALL SEAT CUSHION INSIDE COVERS

(a) Install the seat cushion inside cover RH with the screw.

(b) Install the seat cushion inside cover LH with the screw.

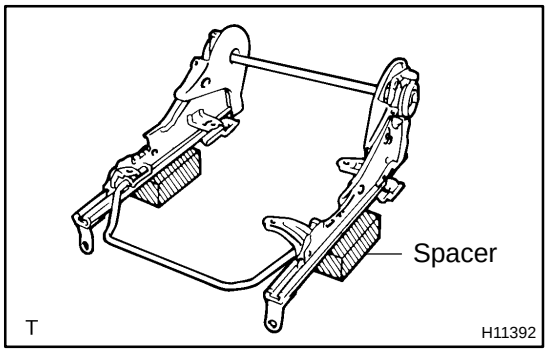

2. INSTALL RECLINING CONNECTING PIPE

(a) Adjust the reclining lock positions of the seat adjusters.

(b) Slide the seat adjusters to the most front position.

(c) Place the adjusters on a spacer to adjust the seat rails in parallel and install the connecting pipe.

HINT:

When installing the connecting pipe while raising up the adjusters, the lock positions adjusted in 2–(a) step slip off then lock error will occur.

3. ASSEMBLE OUTER TRACK AND INNER TRACK

(a) Assemble the outer track and inner track.

(b) Install the E–ring to the outer side on the inner track.

4. INSTALL SEAT TRACK HANDLE

5. INSTALL SEATBACK FRAME

(a) Install the seatback frame to the seatback pad.

(b) Put the seatback cover on the seatback frame with pad.

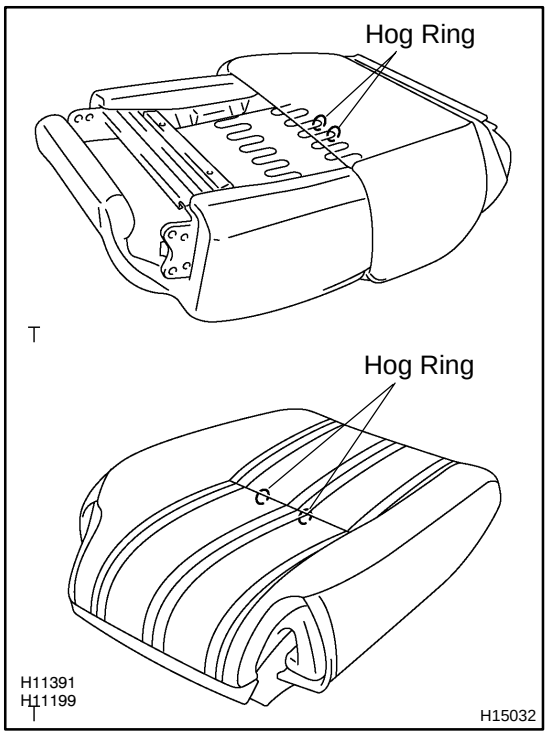

(c) Install the 4 hog rings as shown in the illustration.

HINT:

When installing hog rings, take care to prevent wrinkles as little as possible.

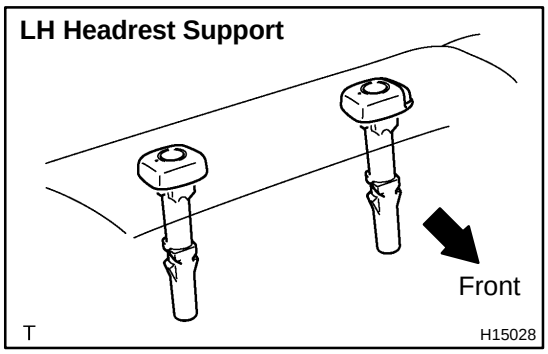

(d) Install the 2 headrest supports.

HINT:

Do not mistake the direction of the LH headrest support with the button.

6. INSTALL SEATBACK ASSEMBLY

(a) Install the seatback assembly with the 4 bolts.

Torque: 43 N·m (440 kgf·cm, 32 ft·lbf)

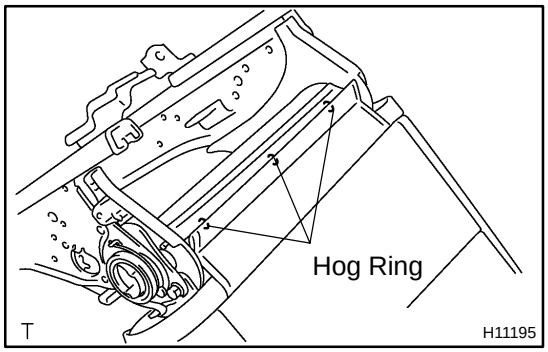

(b) Install 3 new hog rings as shown in the illustration.

HINT:

When installing hog rings, take care to prevent wrinkles as little as possible.

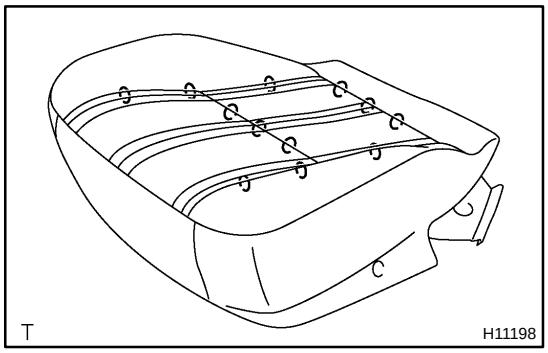

7. INSTALL SEAT CUSHION COVER

(a) Install the seat cushion cover with new hog rings to the seat cushion pad.

HINT:

When installing hog rings, take care to prevent wrinkles as little as possible.

(b) Install the seat cushion frame to the seat cushion pad with cover.

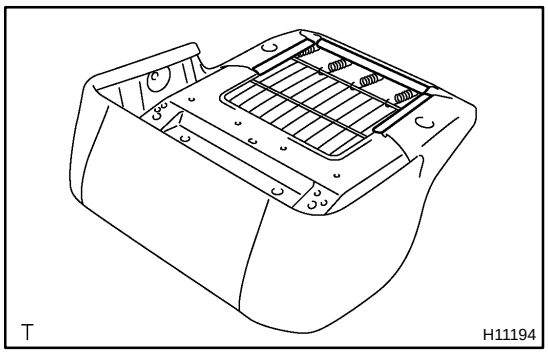

(c) Latch the seat cushion cover hooks.

8. INSTALL SEAT CUSHION ASSEMBLY

Install the seat cushion assembly with the 4 bolts.

Torque: 19 N·m (195 kgf·cm, 14 ft·lbf)

9. INSTALL FRONT SEAT INNER BELT

Install the front seat inner belt with the bolt.

Torque: 41 N·m (420 kgf·cm, 30 ft·lbf)

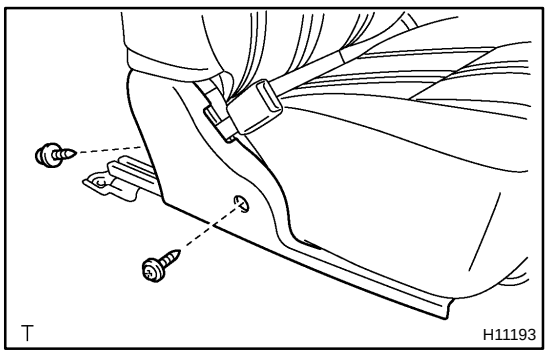

10. INSTALL FRONT SEAT CUSHION INNER SHIELD

Install the front seat cushion inner shield with the 2 screws.

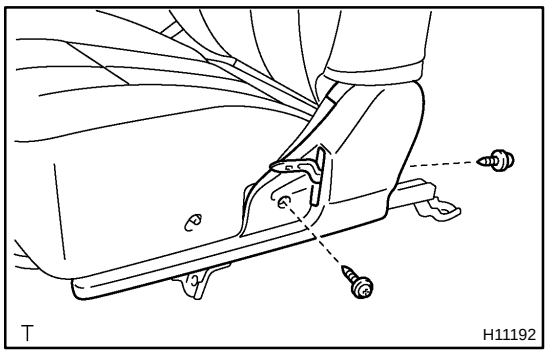

11. INSTALL FRONT SEAT CUSHION OUTER SHIELD

Install the front seat cushion outer shield with the 2 screws.

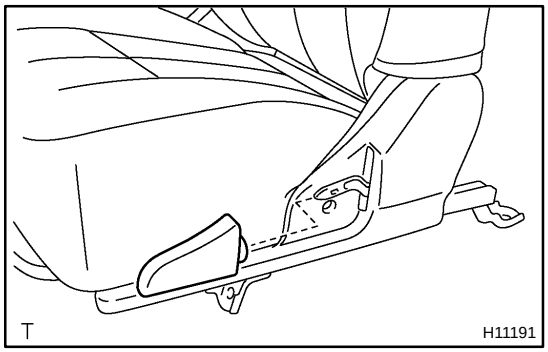

12. INSTALL RECLINING RELEASE LEVER

13. INSTALL HEADREST

14. CHECK SLIDING LOCK POSITION

Check that the outer and inner tracks are locked at the same position.

If the sliding lock positions slip off, pull the sliding seat lever and slide the inner and outer tracks at the same sliding lock positions.

15. INSTALL FRONT SEAT

(a) Put the seat on the vehicle and connect the connector.

(b) Install the 4 bolts and 4 seat track covers.

Torque: 37 N·m (375 kgf·cm, 27 ft·lbf)

FRONT SEAT (Split Type: Passenger's Side)

BO0K4–04

COMPONENTS

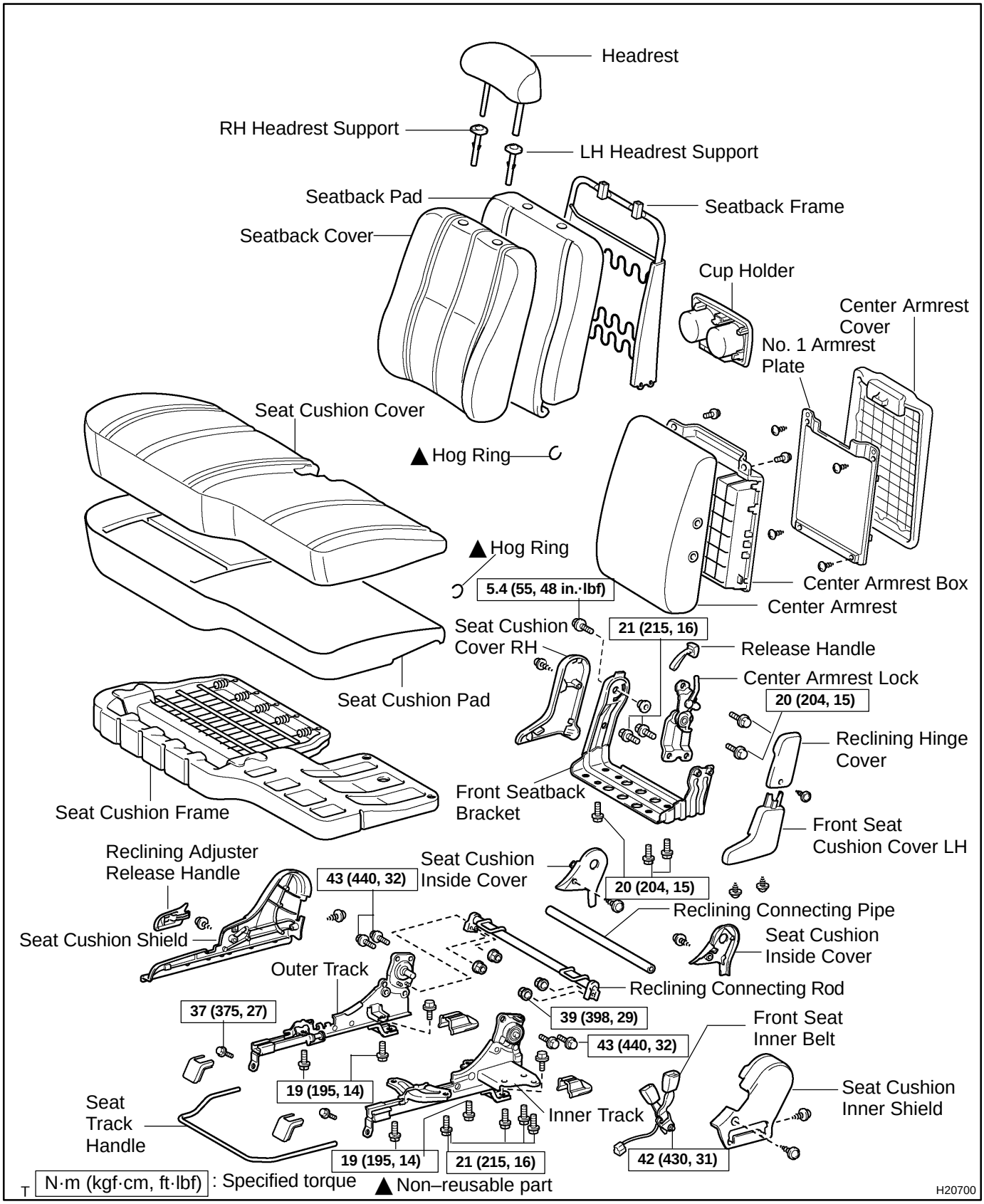

BO40T–02

DISASSEMBLY

1. REMOVE FRONT SEAT

(a) Remove the 4 seat track covers and 4 bolts.

(b) Disconnect the connector and remove the front seat.

2. REMOVE HEADREST

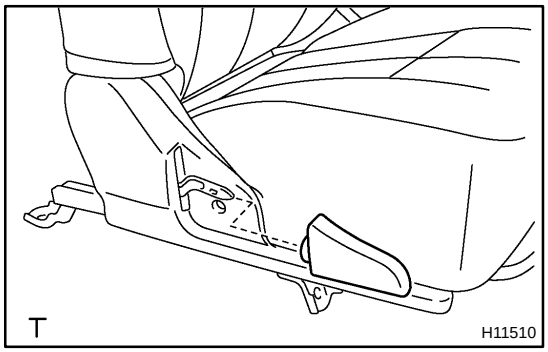

3. REMOVE RECLINING ADJUSTER RELEASE HANDLE

Using a screwdriver, remove the reclining adjuster release handle.

4. REMOVE FRONT SEAT CUSHION SHIELD

Remove the 2 screws and front seat cushion shield.

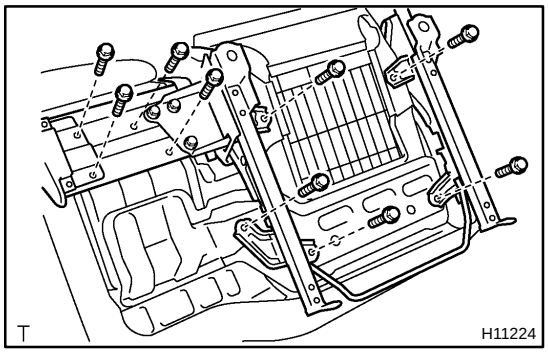

5. REMOVE SEAT CUSHION ASSEMBLY

Remove the 9 bolts and seat cushion assembly.

6. REMOVE SEAT CUSHION COVER

(a) Unlatch the seat cushion cover hooks.

(b) Remove the seat cushion frame from the seat cushion cover with pad.

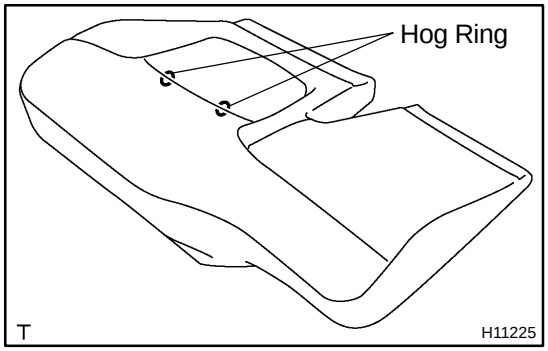

(c) Remove the hog rings and seat cushion cover from the seat cushion pad.

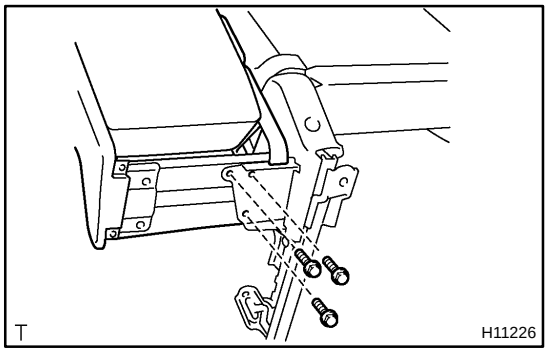

7. REMOVE CENTER ARMREST

Remove the 3 bolts and center armrest.

8. REMOVE FRONT SEATBACK BRACKET

(a) Using a screwdriver, remove the front seat cushion cover.

HINT:

Tape the screwdriver tip before use.

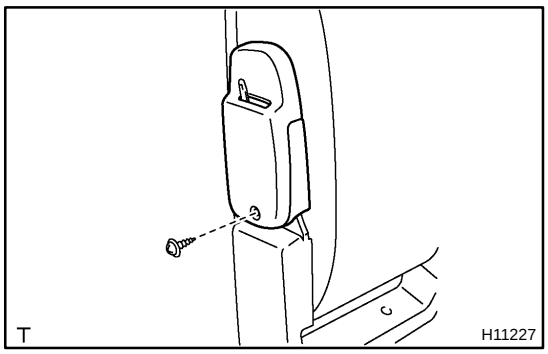

(b) Remove the screw and reclining hinge cover.
(c) Remove the 2 screws and front seat cushion cover LH.
(d) Remove the screw and front seat cushion cover RH.

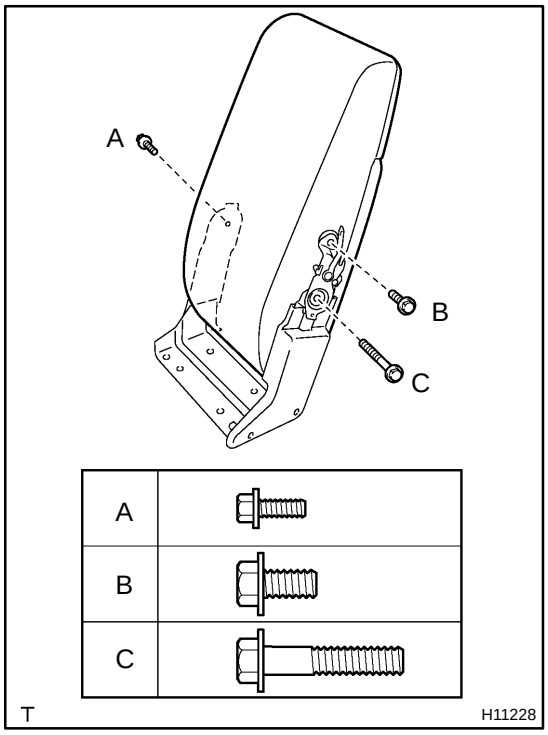

(e) Remove the 3 bolts and front seatback bracket with center armrest lock from the center armrest.

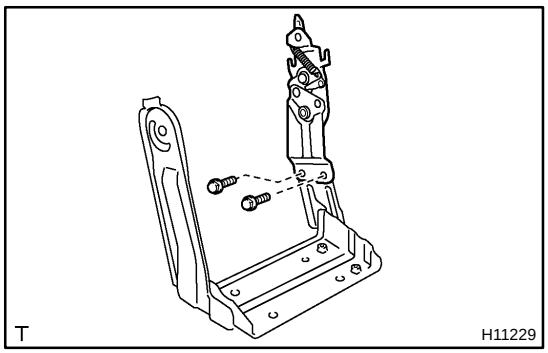

(f) Remove the 2 bolts and center armrest lock from the front seatback bracket.

9. REMOVE CENTER ARMREST BOX

(a) Remove the 4 screws and No. 1 armrest plate.

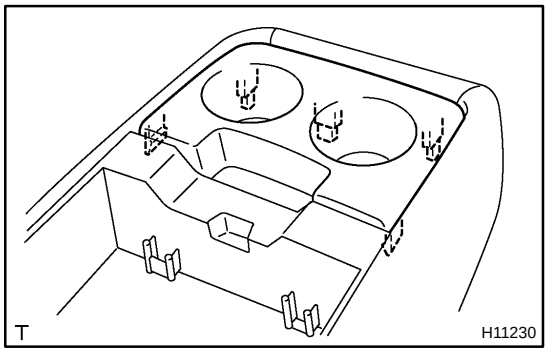

(b) Using a screwdriver, remove the cup holder.

HINT:

Tape the screwdriver tip before use.

(c) Remove the 2 screws.

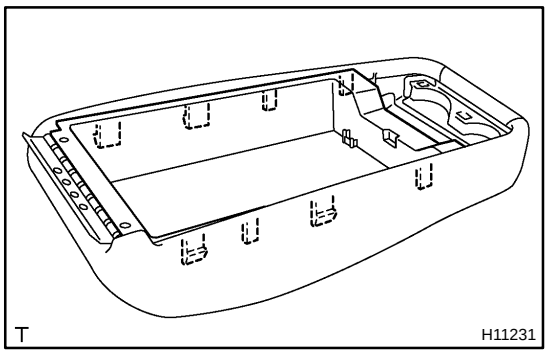

(d) Using a screwdriver, remove the center armrest box.
HINT:
Tape the screwdriver tip before use.

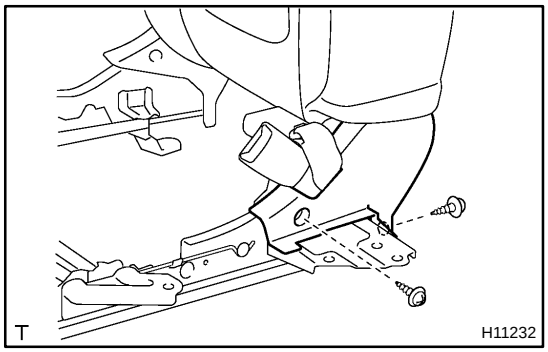

10. REMOVE SEAT CUSHION INNER SHIELD
Remove the 2 screws and seat cushion inner shield.
11. REMOVE FRONT SEAT INNER BELT
Remove the bolt and front seat inner belt.
12. REMOVE SEATBACK ASSEMBLY
Remove the 4 bolts and seatback assembly.
13. REMOVE SEATBACK FRAME
(a) Turn over the seatback cover upward.

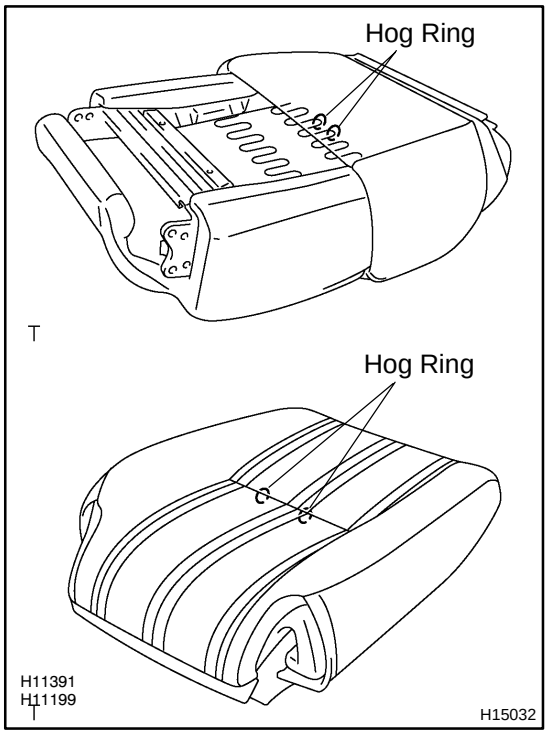

(b) Remove the 4 hog rings as shown in the illustration.
(c) Remove the 2 headrest supports and seatback cover from the seatback pad with frame.
(d) Remove the seatback frame from the seatback pad.
14. REMOVE SEAT TRACK HANDLE
Using a screwdriver, remove the seat track handle.
HINT:
Tape the screwdriver tip before use.
15. REMOVE RECLINING CONNECTING ROD
Remove the 4 nuts and reclining connecting rod.
16. REMOVE RECLINING CONNECTING PIPE
17. REMOVE SEAT CUSHION INSIDE COVERS
(a) Remove the screw and seat cushion inside cover RH.
(b) Remove the screw and seat cushion inside cover LH.

BO2FW–03

REASSEMBLY

1. INSTALL SEAT CUSHION INSIDE COVERS

(a) Install the seat cushion inside cover RH with the screw.

(b) Install the seat cushion inside cover LH with the screw.

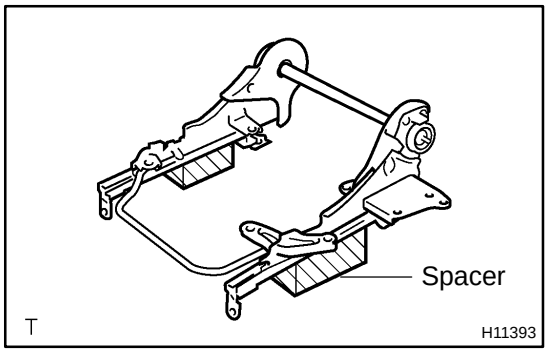

2. INSTALL RECLINING CONNECTING PIPE

(a) Adjust the reclining lock positions of the seat adjusters.

(b) Slide the seat adjusters to the most front position.

(c) Install the reclining connecting rod with the 4 bolts.

Torque: 39 N·m (398 kgf·cm, 29 ft·lbf)

(d) Place the adjusters on a spacer to adjust the seat rails in parallel and install the connecting pipe.

HINT:

When installing the connecting pipe while raising up the adjusters, the lock positions adjusted in 2–(a) step slip off then lock error will occur.

3. INSTALL SEAT TRACK HANDLE

4. INSTALL SEATBACK FRAME

(a) Install the seatback frame to the seatback pad.

(b) Put the seatback cover to the seatback frame with pad.

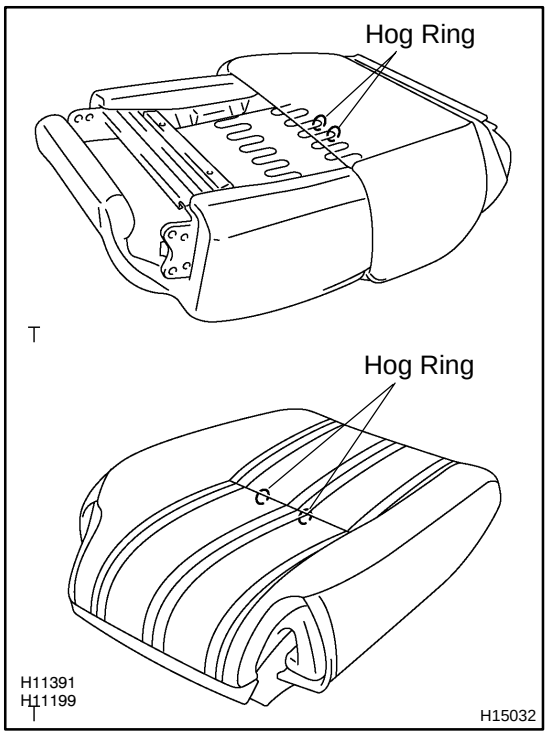

(c) Install the 4 hog rings as shown in the illustration.

HINT:

When installing hog rings, take care to prevent wrinkles as little as possible.

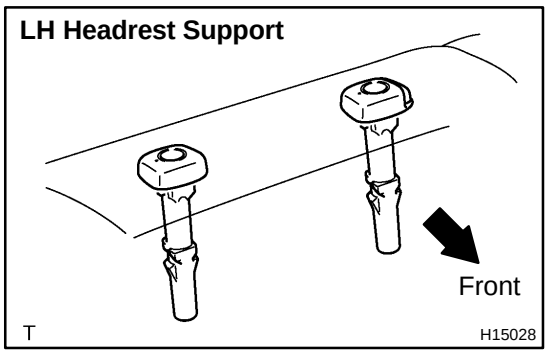

(d) Install the 2 headrest supports.

HINT:

Do not mistake the direction of the LH headrest support with the button.

5. INSTALL SEATBACK ASSEMBLY

Install the seatback assembly with the 4 bolts.

Torque: 43 N·m (440 kgf·cm, 32 ft·lbf)

6. INSTALL FRONT SEAT INNER BELT

Install the front seat inner belt with the bolt.

Torque: 41 N·m (420 kgf·cm, 30 ft·lbf)

7. INSTALL SEAT CUSHION INNER SHIELD

Install the seat cushion inner shield with the 2 screws.

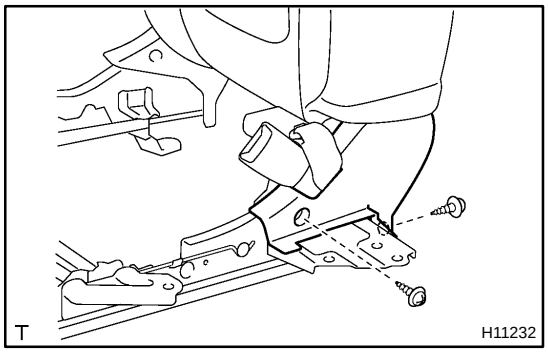

8. INSTALL CENTER ARMREST BOX

(a) Install the center armrest box with the 2 screws.

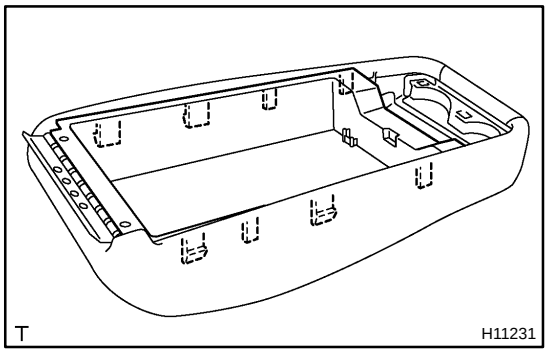

(b) Install the cup holder.

(c) Install the No. 1 armrest plate with the 4 screws.

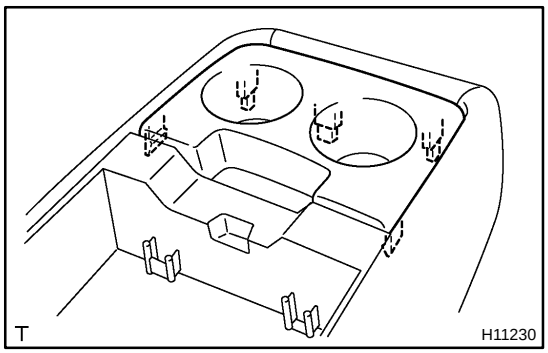

9. INSTALL FRONT SEATBACK BRACKET

(a) Install the center armrest lock with the 2 bolts to the front seatback bracket.

Torque: 21 N·m (215 kgf·cm, 16 ft·lbf)

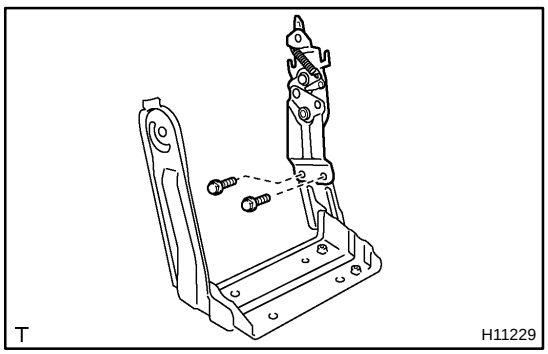

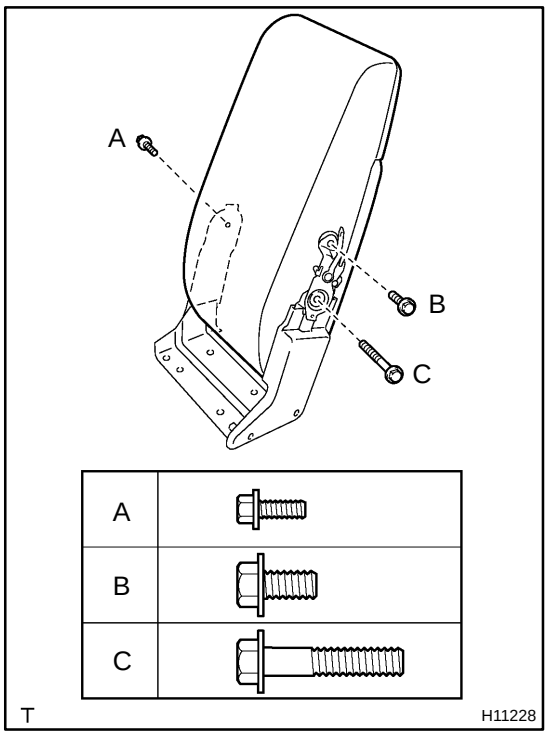

(b) Install the 3 bolts and front seatback bracket with center armrest lock to the center armrest.

Torque:
Bolt A: 5.4 N·m (55 kgf·cm, 48 ft·lbf)
Bolt B and C: 20 N·m (204 kgf·cm, 15 ft·lbf)

HINT:

Use the bolt of correct length when installing the center armrest.

Bolt length:
A: 8 mm (0.31 in.)
B: 18 mm (0.71 in.)
C: 25 mm (0.98 in.)

(c) Install the front seat cushion cover RH with the screw.

(d) Install the front seat cushion cover LH with the 2 screws.

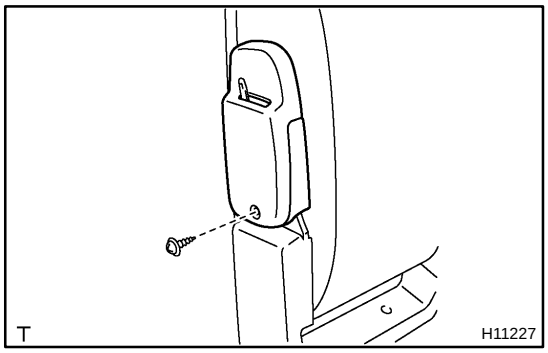

(e) Install the reclining hinge cover with the screw.

(f) Install the front seat cushion cover.

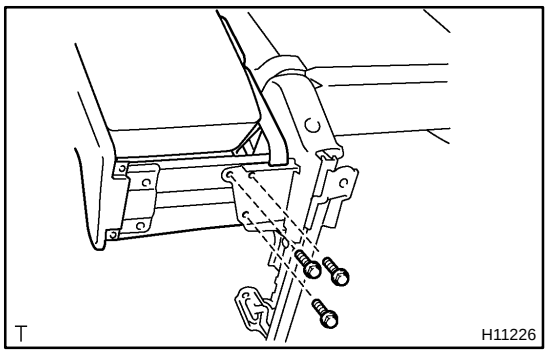

10. INSTALL CENTER ARMREST

Install the center armrest with the 3 bolts.

Torque: 21 N·m (215 kgf·cm, 16 ft·lbf)

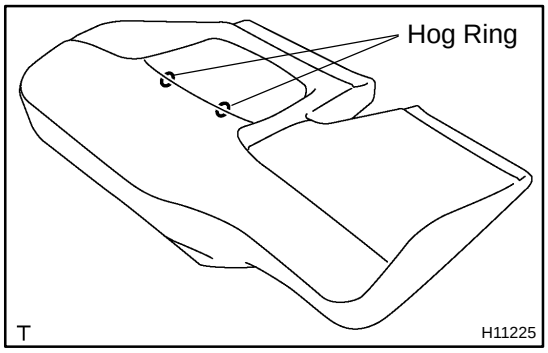

11. INSTALL SEAT CUSHION COVER

(a) Install the seat cushion cover with new hog rings to the seat cushion pad.

HINT:

When installing hog rings, take care to prevent wrinkles as little as possible.

(b) Install the seat cushion frame to the seat cushion cover with pad.

(c) Latch the seat cushion cover hooks.

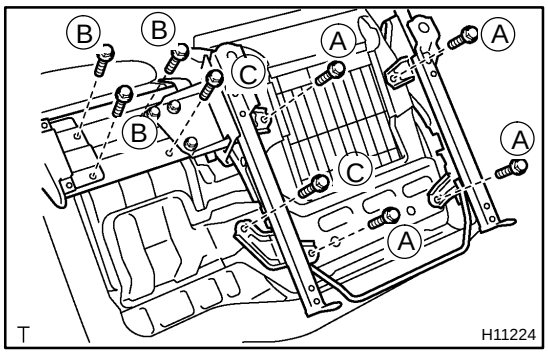

12. INSTALL SEAT CUSHION ASSEMBLY

Install the seat cushion assembly with the 9 bolts.

Torque:

A: 19 N·m (195 kgf·cm, 14 ft·lbf)

B: 20 N·m (204 kgf·cm, 15 ft·lbf)

C: 21 N·m (215 kgf·cm, 16 ft·lbf)

13. INSTALL FRONT SEAT CUSHION SHIELD

Install the front seat cushion shield with the 2 screws.

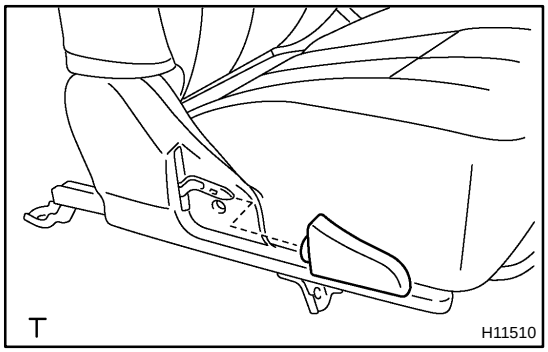

14. INSTALL RECLINING ADJUSTER RELEASE HANDLE

Install the reclining adjuster release handle.

15. INSTALL HEADREST

16. CHECK SLIDING LOCK POSITION

Check that the outer and inner tracks are locked at the same position.

If the sliding lock positions slip off, pull the sliding seat lever and slide the inner and outer tracks at the same sliding lock positions.

17. INSTALL FRONT SEAT

(a) Put the seat on the vehicle and connect the 4 connectors.

(b) Install the 4 bolts and 4 seat track covers.

Torque: 37 N·m (375 kgf·cm, 27 ft·lbf)

REAR SEAT

COMPONENTS

BO2FY–01

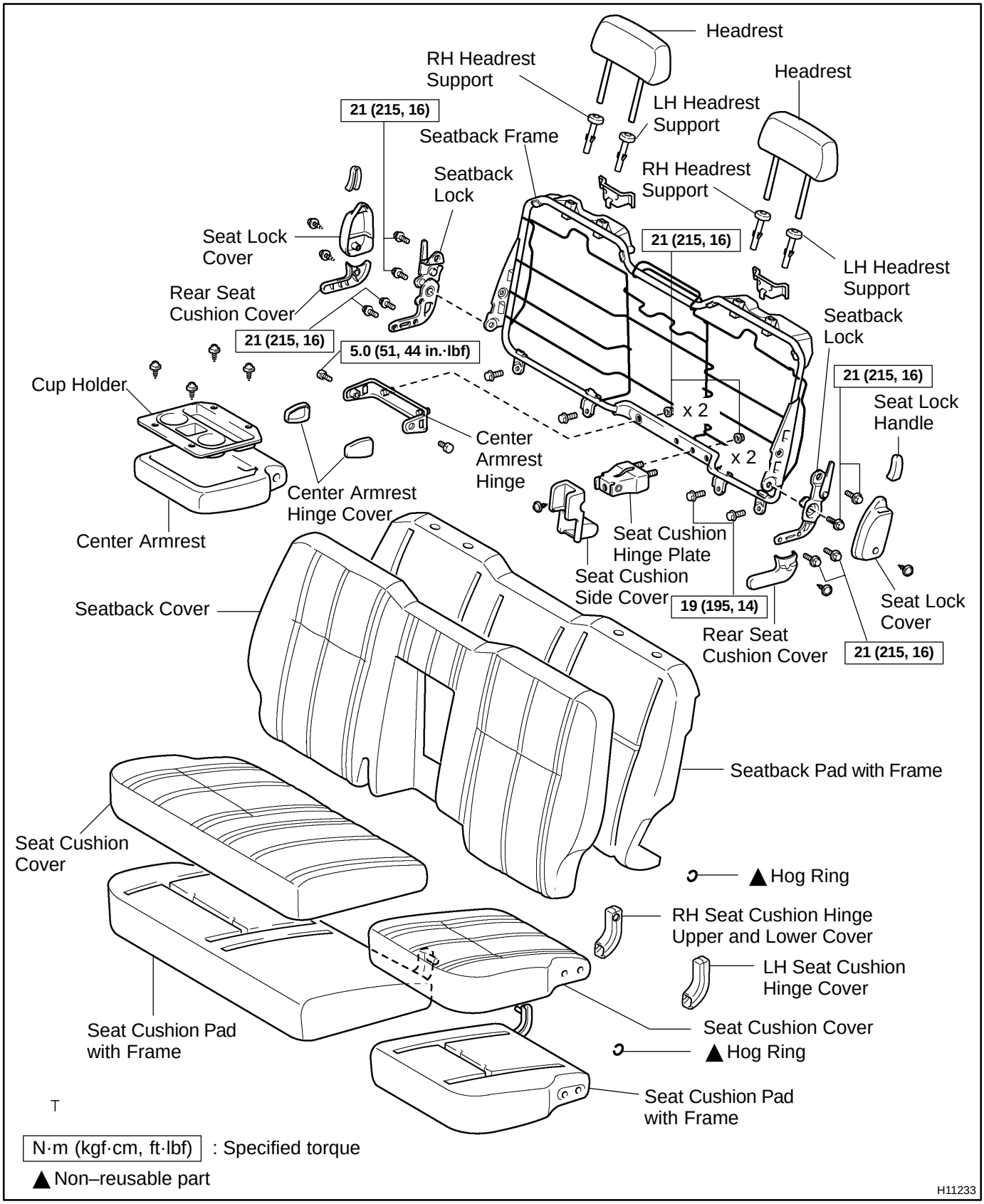

BO2FZ–01

REMOVAL

REMOVE REAR SEAT

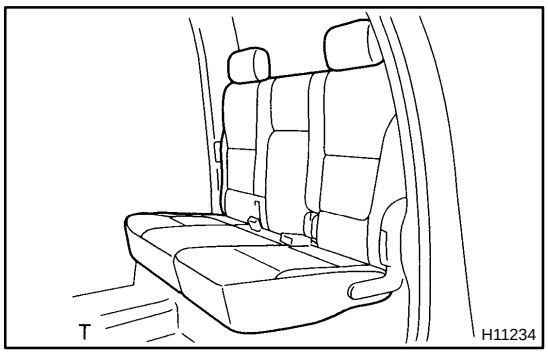

(a) Release the rear seat lock and swing up the seat cushions.

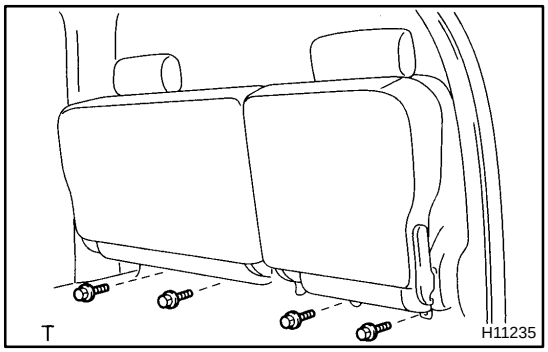

(b) Remove the 4 bolts.
(c) Pull up the rear seat and remove it.

BO2G0–01

DISASSEMBLY

1. REMOVE HEADRESTS

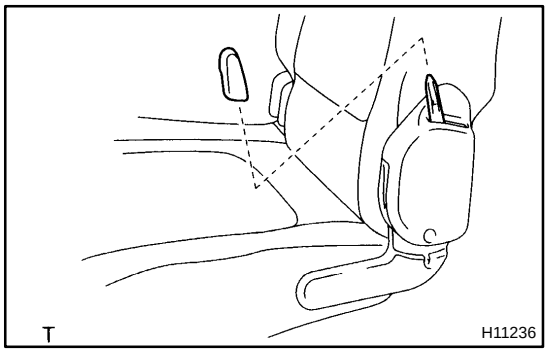

2. REMOVE REAR SEAT LOCK HANDLE

(a) Using a screwdriver, remove the rear seat lock handle.

HINT:

Tape the screwdriver tip before use.

(b) Employ the same manner described above to the other side.

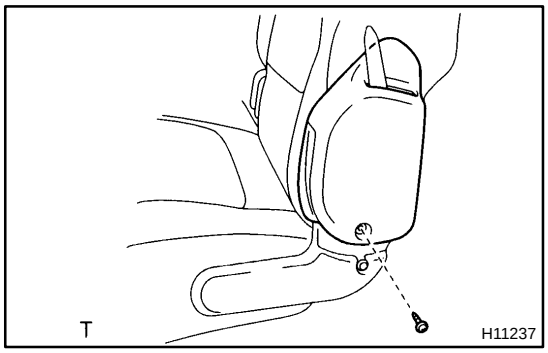

3. REMOVE REAR SEAT LOCK COVER

(a) Remove the screw and rear seat lock cover.

(b) Employ the same manner described above to the other side.

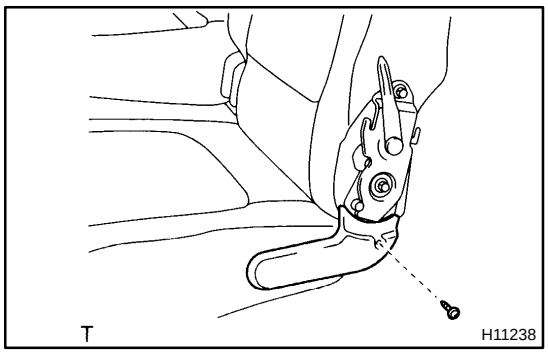

4. REMOVE REAR SEAT CUSHION COVER

(a) Remove the screw and rear seat cushion cover.

(b) Employ the same manner described above to the other side.

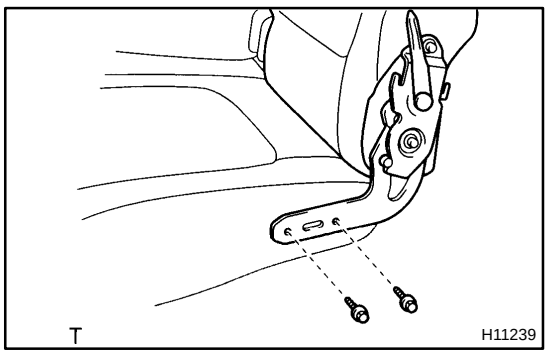

5. REMOVE SEAT CUSHION ASSEMBLY

(a) Remove the 2 bolts.

(b) Remove the seat cushion assembly fron the seat cushion hinge plate.

(c) Employ the same manner described above to the other side.

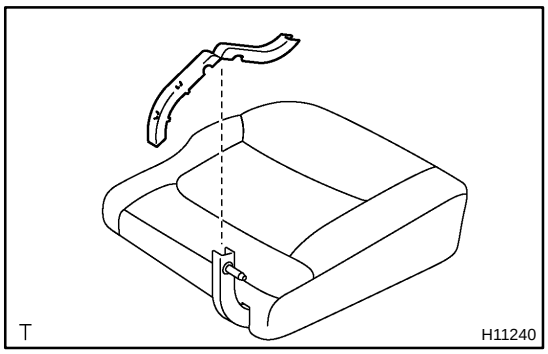

6. REMOVE LH SEAT CUSHION HINGE COVER

Using a screwdriver, remove the LH seat cushion hinge cover.

HINT:

Tape the screwdriver tip before use.

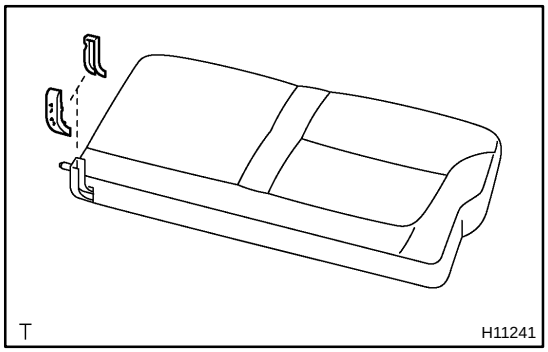

7. REMOVE RH SEAT CUSHION HINGE UPPER AND LOWER COVERS

Using a screwdriver, remove the RH seat cushion hinge upper and lower covers.

HINT:

Tape the screwdriver tip before use.

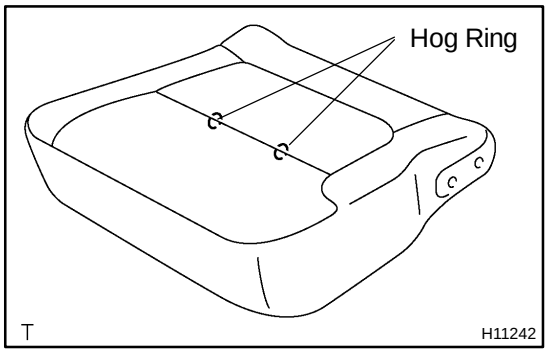

8. REMOVE SEAT CUSHION COVER

(a) Open the fastener.

(b) Remove the hog rings and seat cushion cover.

(c) Employ the same manner described above to the other side.

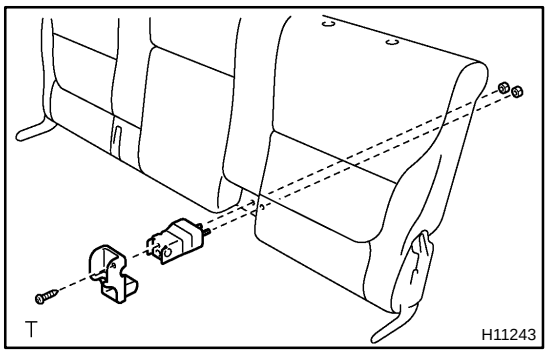

9. REMOVE SEAT CUSHION SIDE COVER

Remove the screw and seat cushion side cover.

10. REMOVE SEAT CUSHION HINGE PLATE

Remove the 2 nuts and seat cushion hinge plate from the seatback frame.

11. REMOVE SEATBACK ASSEMBLY

Remove the 4 bolts and seatback assembly.

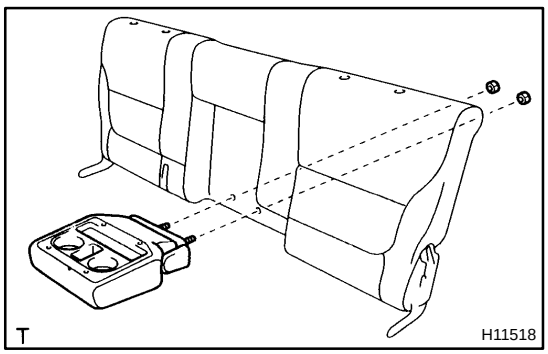

12. REMOVE CENTER ARMREST

Remove the 2 nuts and center armrest from the seatback assembly.

13. REMOVE CUP HOLDER

Remove the 4 screws and cup holder from the center armrest.

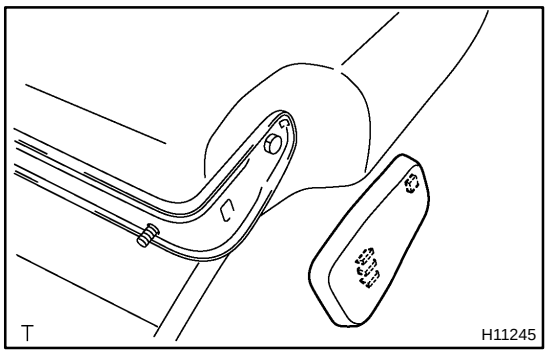

14. REMOVE CENTER ARMREST HINGE

(a) Using a screwdriver, remove the center armrest hinge cover.

HINT:

Tape the screwdriver tip before use.

(b) Employ the same manner described above to the other side.

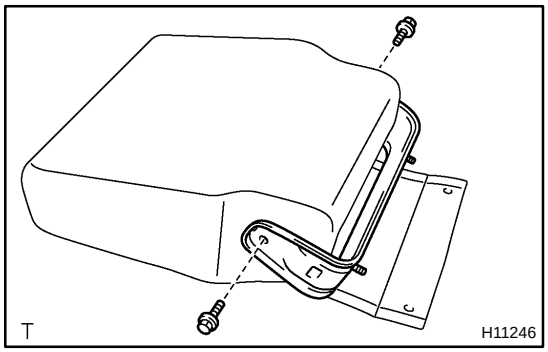

(c) Remove the 2 bolts and center armrest hinge.

15. REMOVE HEADREST SUPPORTS

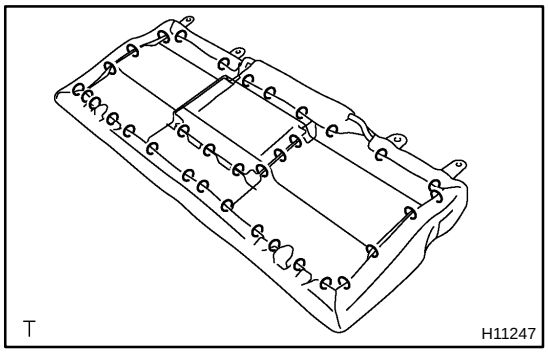

16. REMOVE SEATBACK COVER

(a) Remove the hog rings from the rear side of the seatback assembly.

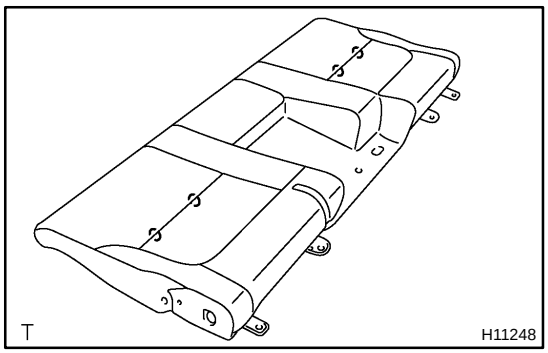

(b) Remove the hog rings and seatback cover.

BO2G1–01

REASSEMBLY

1. INSTALL SEATBACK COVER

(a) Install the seatback cover with new hog rings.

HINT:

When installing hog rings, take care to prevent wrinkles as little as possible.

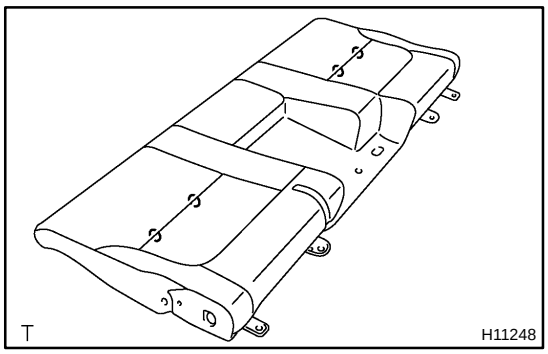

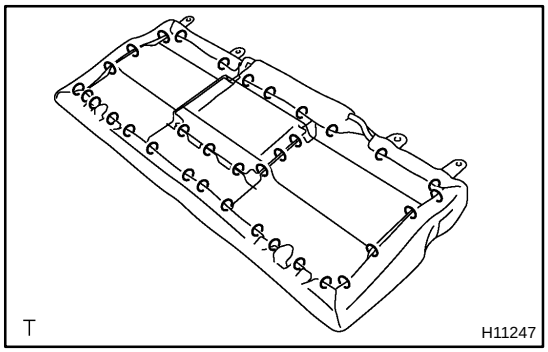

(b) Install the new hog rings to the rear side of the seatback assembly.

HINT:

When installing hog rings, take care to prevent wrinkles as little as possible.

2. INSTALL HEADREST SUPPORTS

HINT:

Do not mistake the direction of the 2 LH headrest support with the button.

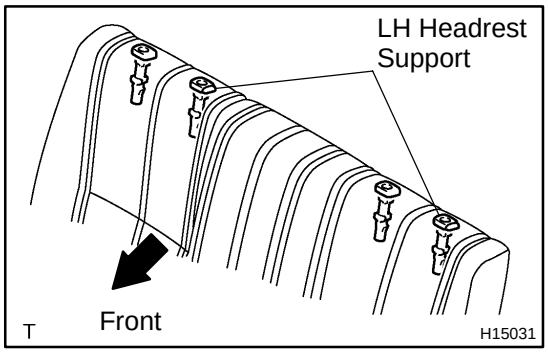

3. INSTALL CENTER ARMREST HINGE

(a) Install the center armrest hinge with the 2 bolts.

Torque: 5.0 N·m (51 kgf·cm, 44 in.·lbf)

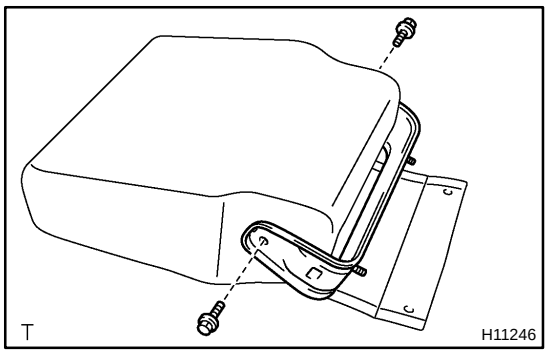

(b) Install the center armrest hinge cover as shown in the illustration, then employ the same manner to the other side.

4. INSTALL CUP HOLDER

Install the cup holder with the 4 screws to the center armrest.

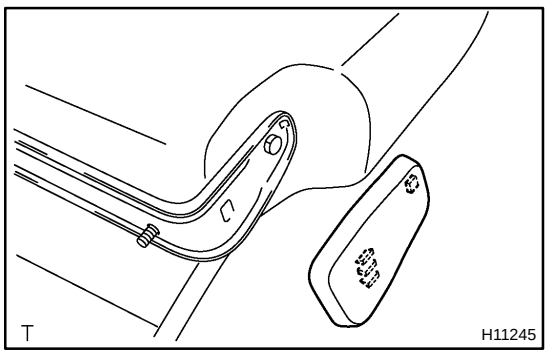

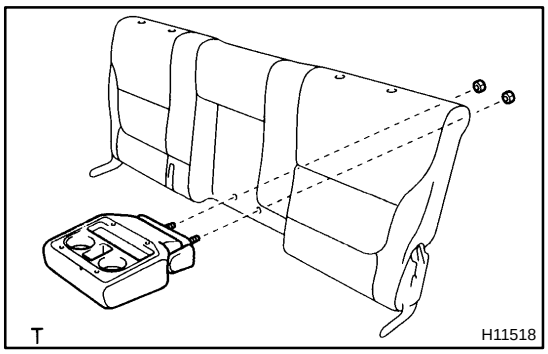

5. INSTALL CENTER ARMREST

Install the center armrest with the 2 nuts to the seatback assembly.

Torque: 21 N·m (215 kgf·cm, 16 ft·lbf)

6. INSTALL SEATBACK ASSEMBLY

Install the seatback assembly with the 4 bolts.

Torque: 21 N·m (215 kgf·cm, 16 ft·lbf)

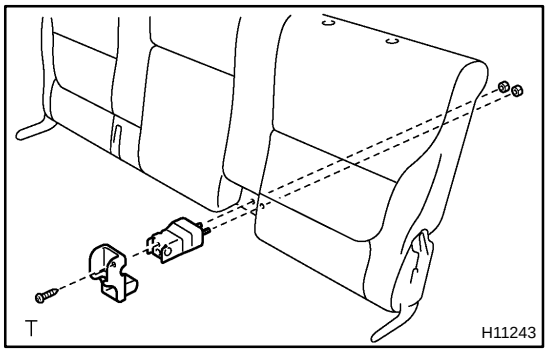

7. INSTALL SEAT CUSHION HINGE PLATE

Install the seat cushion hinge plate with the 2 nuts to the seatback frame.

Torque: 21 N·m (215 kgf·cm, 16 ft·lbf)

8. INSTALL SEAT CUSHION SIDE COVER

Install the seat cushion side cover with the screw.

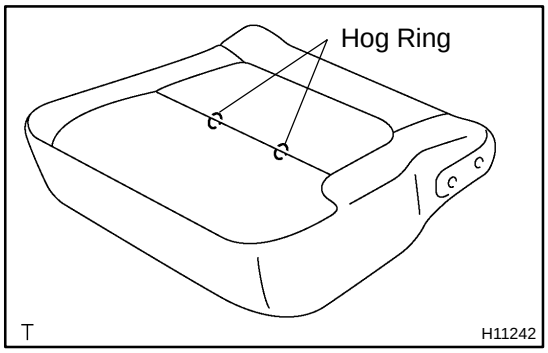

9. INSTALL SEAT CUSHION COVER

(a) Install the seat cushion cover with new hog rings.

HINT:

When installing hog rings, take care to prevent wrinkles as little as possible.

(b) Close the fastener.

(c) Employ the same manner described above to the other side.

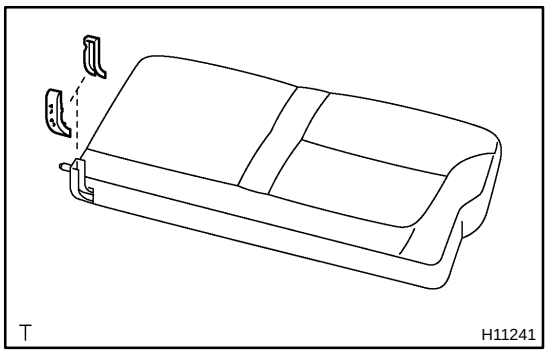

10. INSTALL RH SEAT CUSHION HINGE UPPER AND LOWER COVERS

Install the RH seat cushion hinge upper and lower covers.

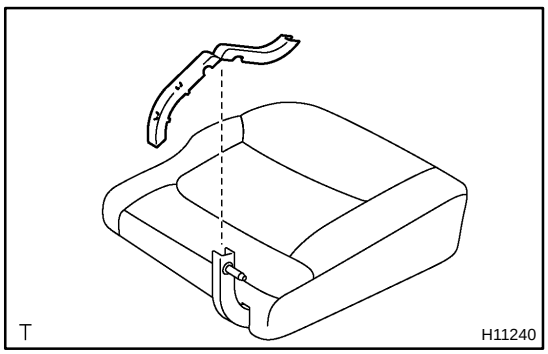

11. INSTALL LH SEAT CUSHION HINGE COVER

Install the LH seat cushion hinge cover.

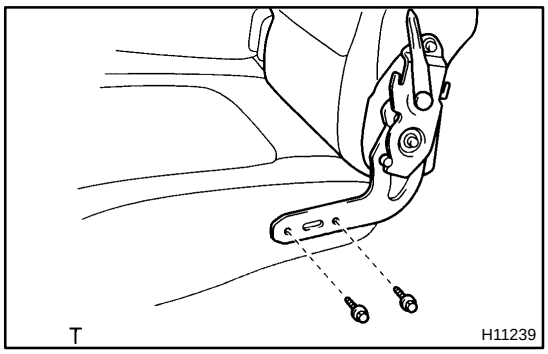

12. INSTALL SEAT CUSHION ASSEMBLY

(a) Install the seat cushion assembly to the seat cushion hinge plate.

(b) Install the seat cushion assembly to the seatback lock with the 2 bolts.

Torque: 21 N·m (215 kgf·cm, 16 ft·lbf)

(c) Employ the same manner described above to the other side.

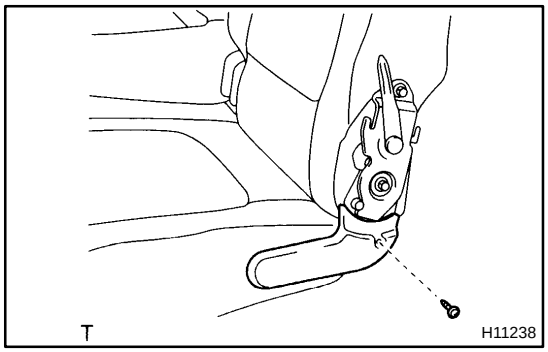

13. INSTALL REAR SEAT CUSHION COVER

(a) Install the rear seat cushion cover with the screw.

(b) Employ the same manner described above to the other side.

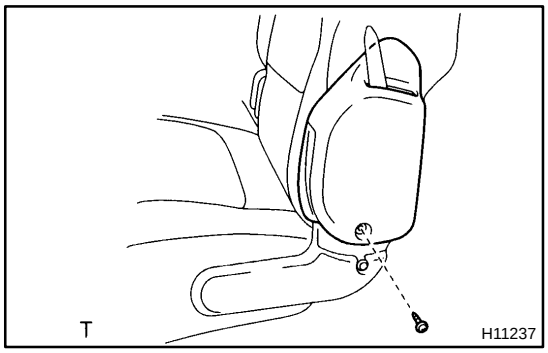

14. INSTALL REAR SEAT LOCK COVER

(a) Install the rear seat lock cover with the screw.

(b) Employ the same manner described above to the other side.

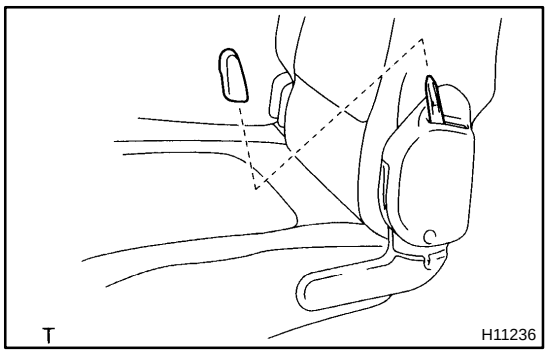

15. INSTALL REAR SEAT LOCK HANDLE

(a) Install the rear seat lock handle.

(b) Employ the same manner described above to the other side.

16. INSTALL HEADRESTS

BO2G2–01

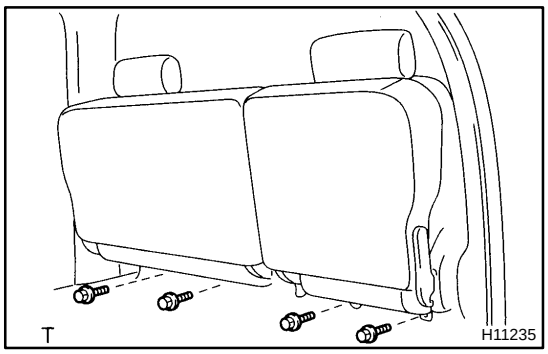

INSTALLATION

INSTALL REAR SEAT

(a) Hook the rear seat to the body panel.

(b) Install the 4 bolts.

Torque: 19 N·m (195 kgf·cm, 14 ft·lbf)

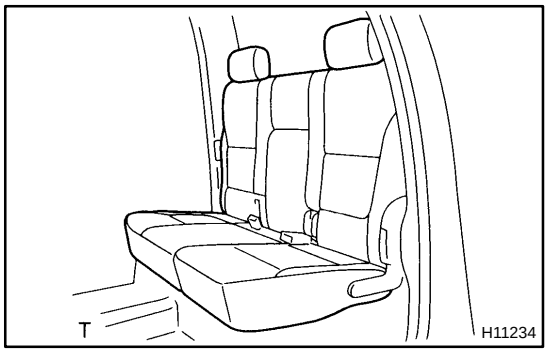

(c) Release the rear seat lock and swing down the seat cushions.

HINT:

Before swinging down the seat cushion, store the inner belts in the rear seat.

SEAT BELT

COMPONENTS

BO2G3–01

Standard cab:

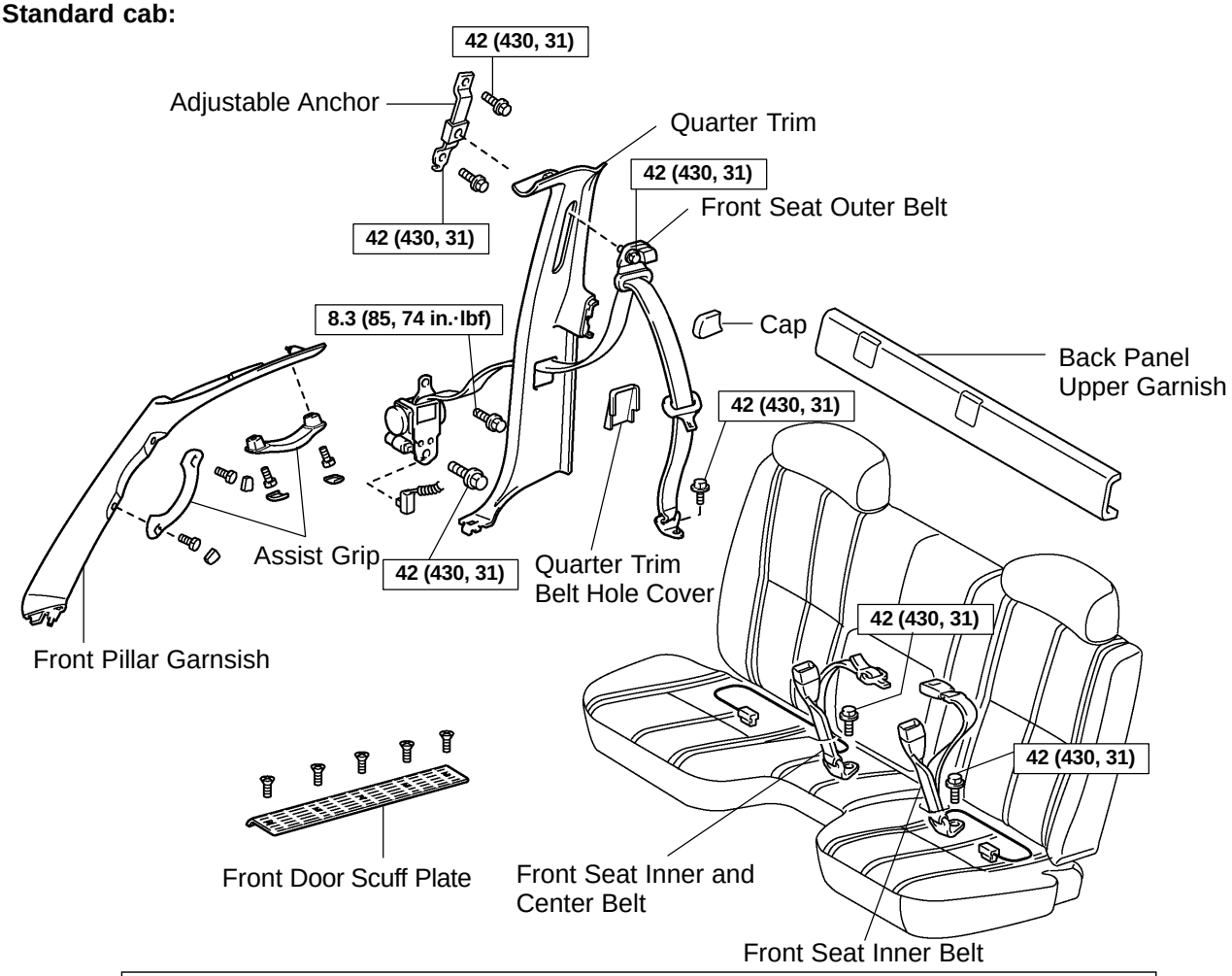

Split type, Passenger's side:

Separate type:
Split type, Driver's side:

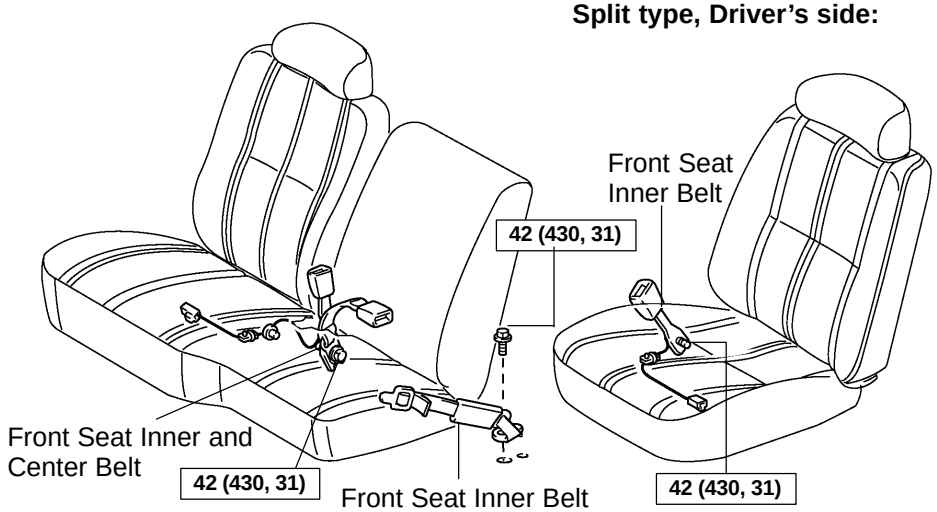

T N·m (kgf·cm, ft·lbf) : Specified torque

H11366

Access cab:

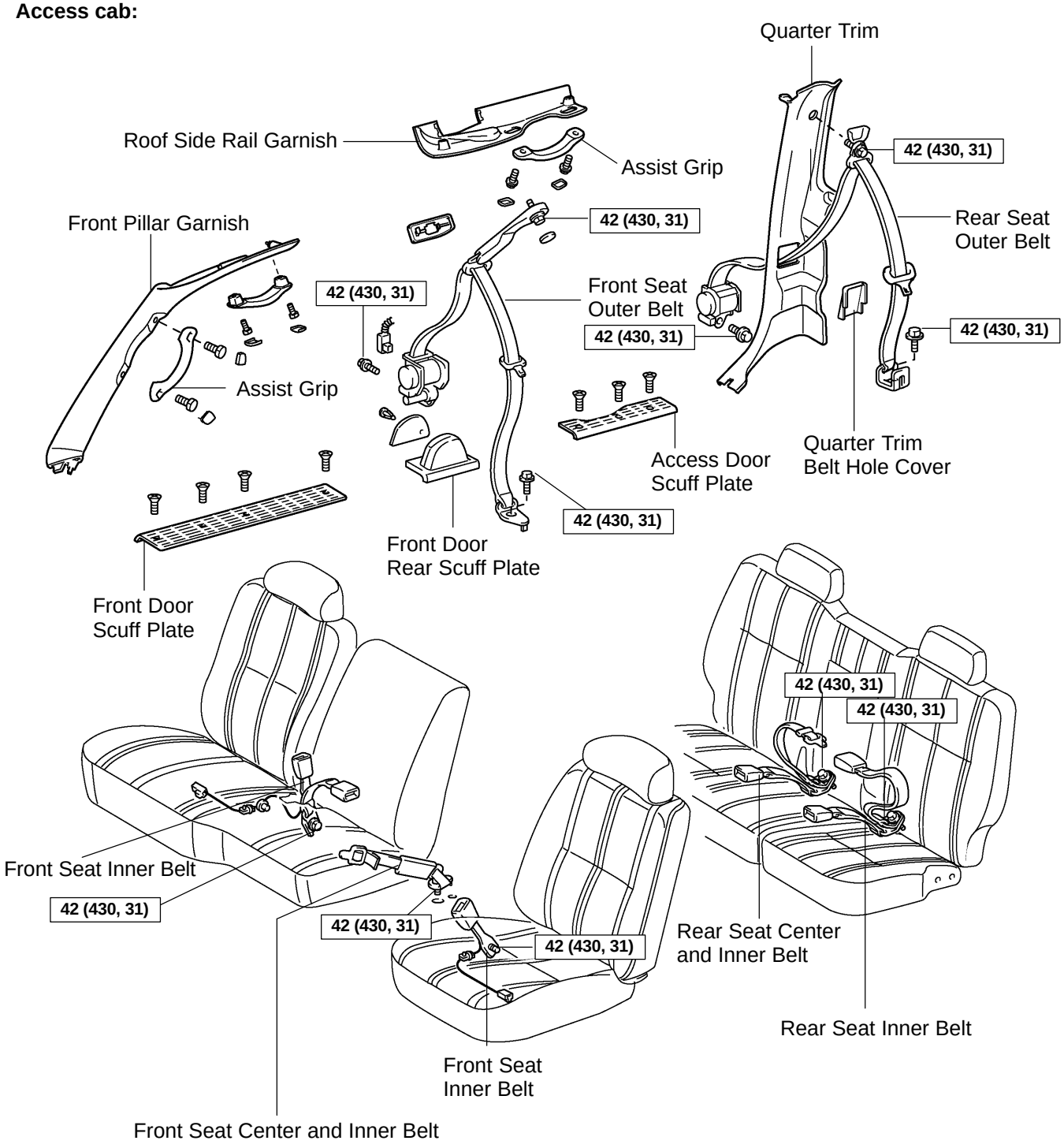

T

N·m (kgf·cm, ft·lbf) : Specified torque

H11367

BO0KL–02

INSPECTION

CAUTION:

Replace the seat belt assembly (outer belt, inner belt, bolts, nuts or sill–bar) if it has been used in a severe impact. The entire assembly should be replaced even if damage is not obvious.

1. Except manual type:
RUNNING TEST (IN SAFE AREA)

(a) Fasten the front seat belts.

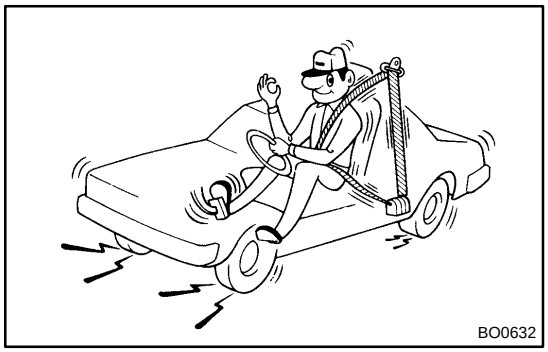
BO0632

(b) Drive the car at 10 mph (16 km/h) and slam on the brakes. Check that the belt locks and cannot be extended at this time.

HINT:

Conduct this test in a safe area. If the belt does not lock, remove the belt mechanism assembly and conduct the following static check. Also, whenever installing a new belt assembly, verify the proper operation before installation.

2. Driver's seat belt (ELR):
STATIC TEST

(a) Make sure that the belt locks when pulled out quickly.
(b) Remove the locking retractor assembly.
(c) Tilt the retractor slowly.

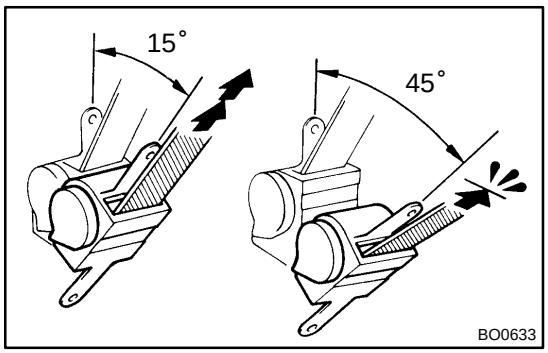

BO0633

(d) Make sure that the belt can be pulled out at a tilt of 15 degrees or less, and cannot be pulled out over 45 degrees of tilt.

If a problem is found, replace the assembly.

3. Except driver's seat belt (ALR/ELR):
STATIC TEST

(a) Make sure that the belt locks when pulled out quickly.
(b) Remove the locking retractor assembly.
(c) Pull out the whole belt and measure the length of the whole belt.
Then retract the belt slightly and pull it out again.
(d) Make sure that the belt cannot be extended further.

If a problem is found, replace the assembly.

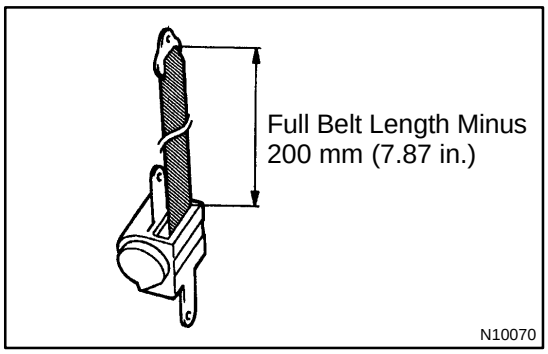

(e) Retract the whole belt, then pull out the belt until 200 mm (7.87 in.)of belt remains retracted.

(f) Tilt the retractor slowly.

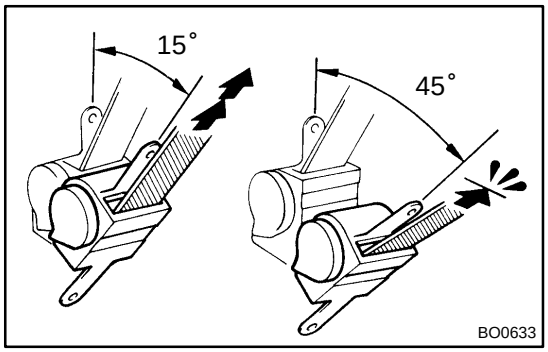

(g) Make sure that the belt can be pulled out at a tilt of 15 degrees or less, and cannot be pulled out at over 45 degrees of tilt.

If a problem is found, replace the assembly.

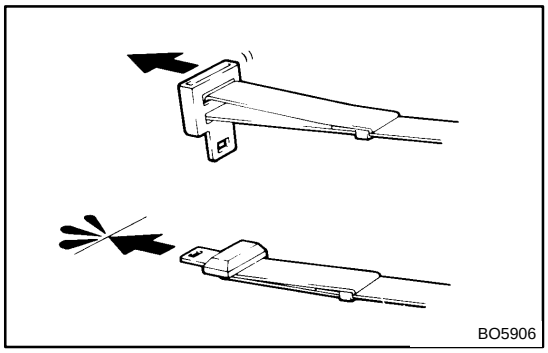

4. Manual type:

TESTING

(a) Adjust the belt to the proper length.

(b) Apply a firm load to the belt.

(c) Make sure that the belt does not extend.

SEAT BELT PRETENSIONER

BO2G4–01

REMOVAL

NOTICE:

- **If the wiring connector of the seat belt pretensioner is disconnected with the ignition switch at ON or ACC, diagnostic trouble codes will be recorded.**
- **Never use seat belt pretensioner from another vehicle. When replacing parts, replace them with new parts.**

1. Standard cab:
REMOVE FRONT SEAT OUTER BELT

(a) Remove the 5 screws and front door scuff plate.

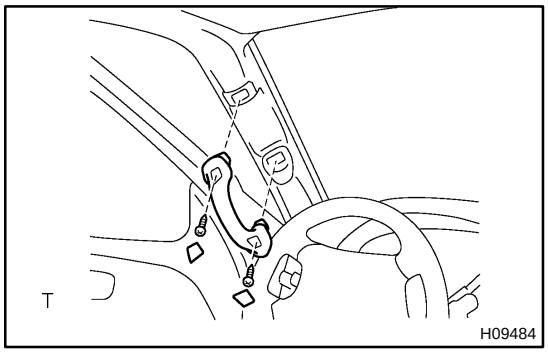

(b) Remove the front pillar garnish.

(1) Using a screwdriver, remove the caps.

HINT:
Tape the screwdriver tip before use.

(2) Using a torx driver, remove the torx screws and assist grip.

Torx driver: T30 (Part No. 09041–00030 or locally manufactured tool)

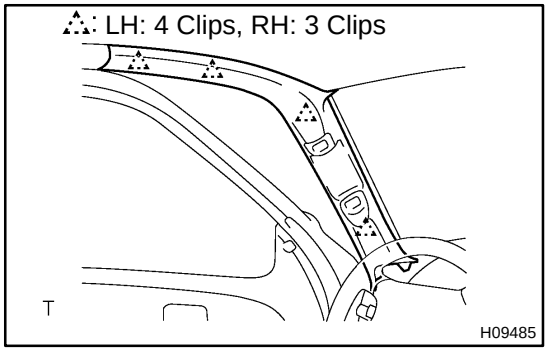

(3) Using a screwdriver, remove the front pillar garnish.

HINT:
Tape the screwdriver tip before use.

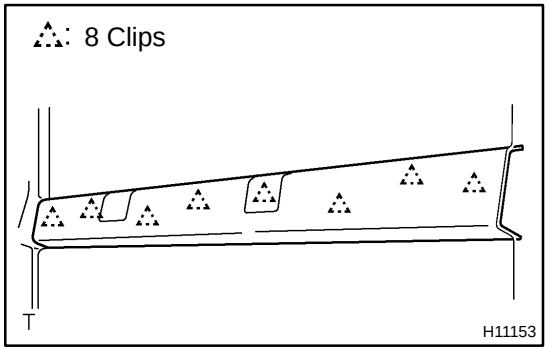

(c) Using a screwdriver, remove the back panel upper garnish.

HINT:
Tape the screwdriver tip before use.

(d) Remove the bolt and front seat outer belt floor anchor.

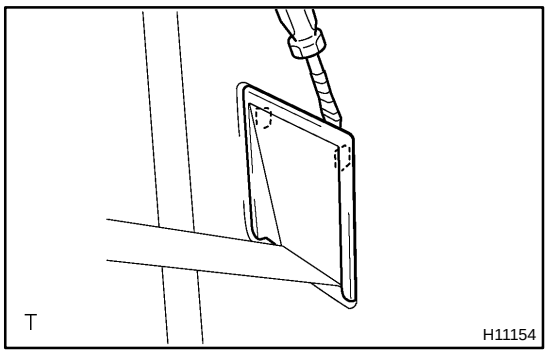

(e) Remove the quarter trim.
(1) Using a screwdriver, remove the quarter trim belt hole cover.

HINT:
Tape the screwdriver tip before use.

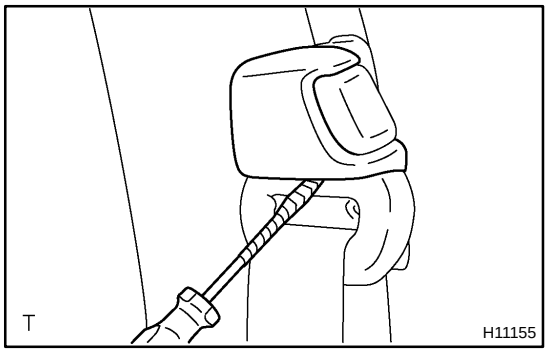

(2) Using a screwdriver, remove the cap.

HINT:
Tape the screwdriver tip before use.

(3) Remove the bolt and front seat outer belt shoulder anchor.

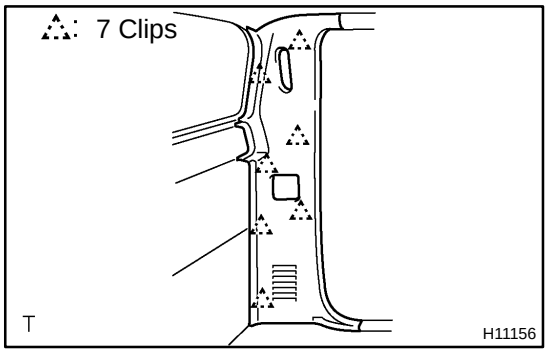

(4) Using a screwdriver, remove the quarter trim.

HINT:
Tape the screwdriver tip before use.

(f) Remove the retractor of front seat outer belt.

CAUTION:
Never disassemble the front seat outer belt.
NOTICE:
When removing the retractor of front seat outer belt, take care not to pull the seat belt pretensioner wire harness.

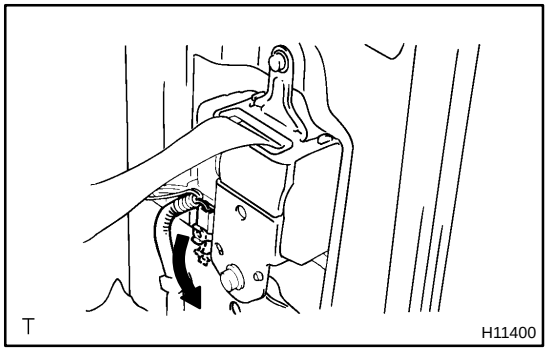

(1) Disconnect the pretensioner connector as shown in the illustration.

CAUTION:
When removing the seat belt pretensioner, work must be started 90 seconds after the ignition switch is turned to the "LOCK" position and the negative (–) terminal cable is disconnected from the battery.

(2) Remove the 2 bolts and retractor of front seat outer belt.

2. Access cab:
REMOVE FRONT SEAT OUTER BELT

(a) Remove the 4 screws and front door scuff plate.
(b) Remove the 3 screws and rear door scuff plate.
(c) Remove the bolt and front seat outer belt floor anchor.

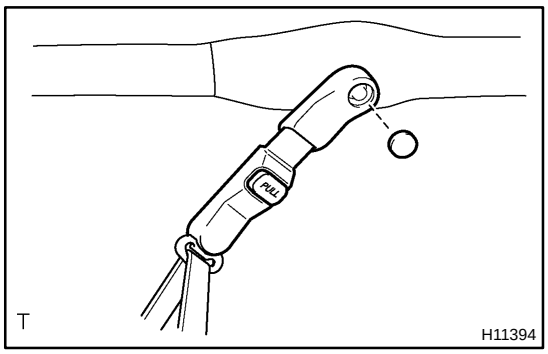

(d) Remove the front seat outer belt shoulder anchor.
(1) Using a screwdriver, remove the cap.

HINT:
Tape the screwdriver tip before use.

(2) Remove the bolt and front seat outer belt shoulder anchor.

(e) Remove the roof side rail garnish.
(1) Using a screwdriver, remove the caps.

HINT:
Tape the screwdriver tip before use.

(2) Using a torx driver, remove the 2 torx screws and assist grip.

Torx driver: T30 (Part No. 09041–00030 or locally manufactured tool)

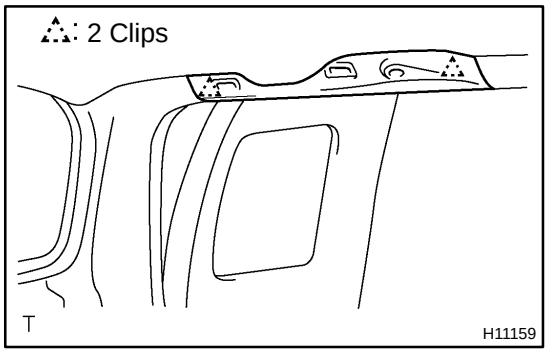

(3) Using a screwdriver, remove the roof side rail garnish.

HINT:
Tape the screwdriver tip before use.

(f) Remove the front door rear scuff plate and cover.
(1) Remove the clip cover.
(2) Remove the clip and front door rear scuff plate.

(g) Remove the retractor of front seat outer belt.

CAUTION:
Never disassemble the front seat outer belt.
NOTICE:
When removing the retractor of front seat outer belt, take care not to pull the seat belt pretensioner wire harness.

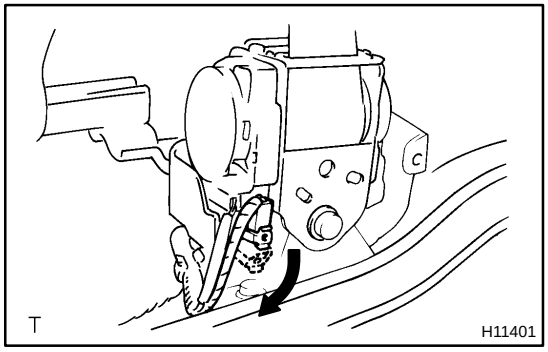

(1) Disconnect the pretensioner connector as shown in the illustration.

CAUTION:
When removing the seat belt pretensioner, work must be started 90 seconds after the ignition switch is turned to the "LOCK" position and the negative (–) terminal cable is disconnected from the battery.

(2) Remove the bolt and retractor of front seat outer belt.

BO2G5–01

INSPECTION

1. PRETENSIONER IS NOT ACTIVATED

(a) Perform a diagnostic system check (See page DI–490).

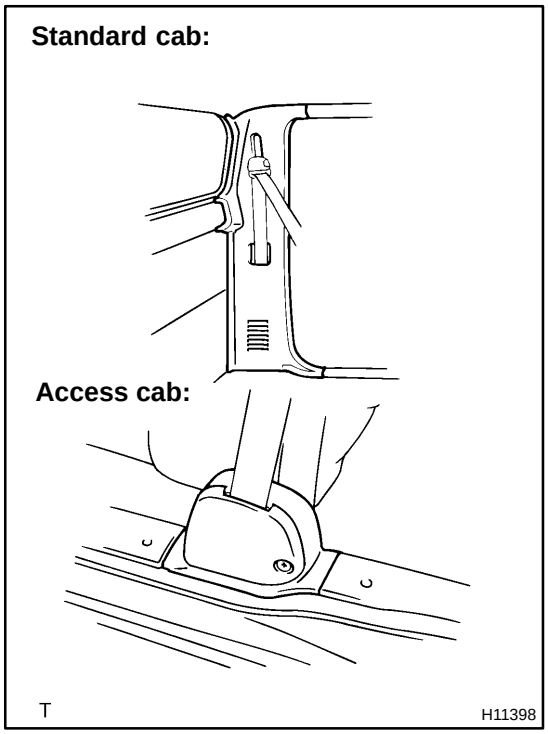

(b) Perform a visual check which includes the following items with the front seat outer belt removed from the vehicle.

- ▲ Standard cab:
  Check for cuts and cracks in, or marked discoloration on the quarter trim.
- ▲ Access cab:
  Check for cuts and cracks in, or marked discoloration on the front door rear scuff plate.
- ▲ Check for cuts and cracks in wire harness, and for chipping in connectors.

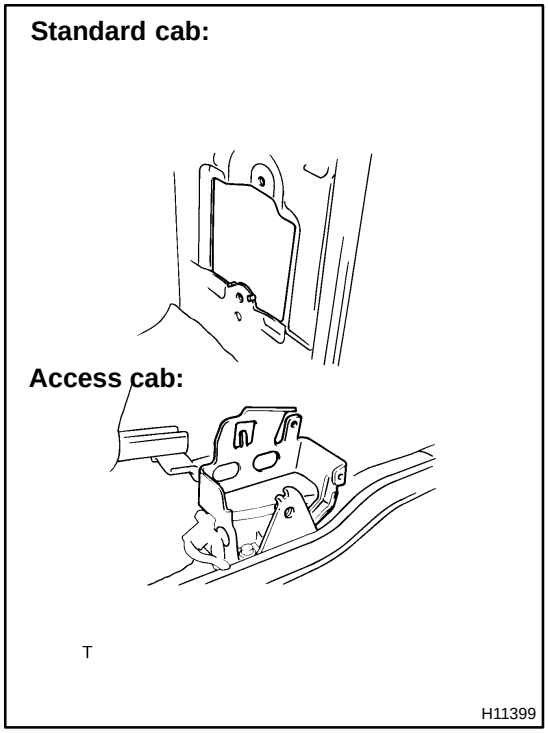

- ▲ Standard cab:
  Check for deformation of the quarter panel.
- ▲ Access cab:
  Check for deformation of the ELR bracket.

Standard cab:

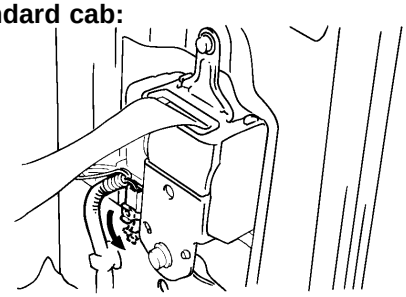

T

Access cab:

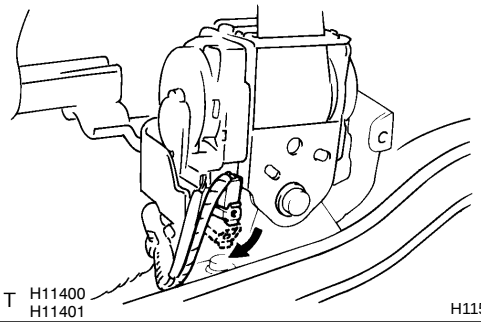

T H11400 H11401 H11520

▲ Check for cuts and miute cracks in wire harness or marked discoloration on the front seat outer belt.

CAUTION:
For removal and installation of the front seat outer belt, see page BO–137 and BO–149.
Be sure to follow the correct procedure.

2. PRETENSIONER IS ACTIVATED

(a) Perform a diagnostic system check (See page DI–490).

Standard cab:

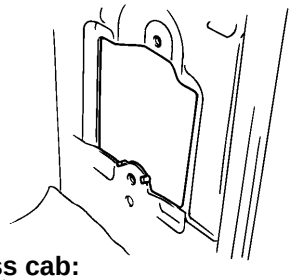

Access cab:

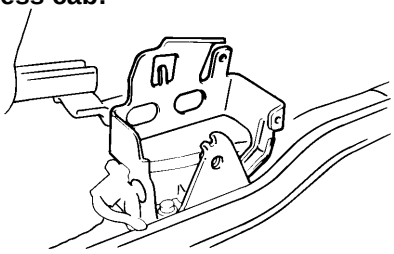

T H11399

(b) Perform a visual check which includes the following items with the front seat outer belt removed from the vehicle.

▲ Standard cab:
Check for deformation of the quarter panel.

▲ Access cab:
Check for deformation of the ELR bracket.

▲ Check for damage on the connector and wire harness.

BO2G6–01

DISPOSAL

HINT:

When scrapping vehicles equipped with a seat belt pretensioner or disposing of a front seat outer belt (with seat belt pretensioner) always first activate the seat belt pretensioner in accordance with the procedure described below. If any abnormality occurs in the seat belt pretensioner operation, contact the SERVICE DEPT. of TOYOTA MOTOR SALES, U.S.A.,INC. When disposing of a front seat outer belt (with seat belt pretensioner) activated in a collision, follow the same procedure given in step 1–(e) in ”DISPOSAL”.

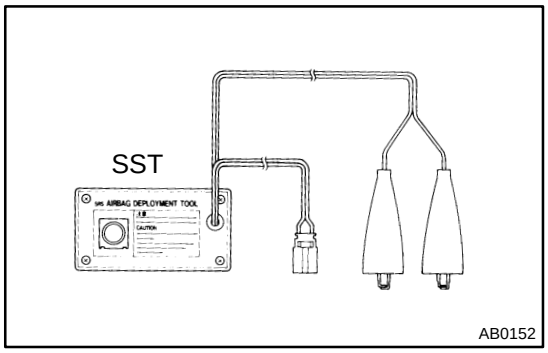

CAUTION:

- **Never dispose of front seat outer belt which has an inactivated pretensioner.**
- **The seat belt pretensioner produces a sizeable exploding sound when it activates, so perform the operation out–of–door and where it will not create a nuisance to nearby residents.**
- **When activating the seat belt pretensioner, always use the specified SST. (SRS Airbag Deployment Tool) Perform the operation in a place away from electrical noise.**

  SST 09082–00700, 09082–00740
- **When activating a front seat outer belt (with seat belt pretensioner), perform the operation at least 10 m (33 ft) away from the front seat outer belt.**
- **Use gloves and safety glasses when handling a front seat outer belt with activated pretensioner.**
- **Always wash your hands with water after completing the operation.**
- **Do not apply water, etc. to a front seat outer belt with activated pretensioner.**

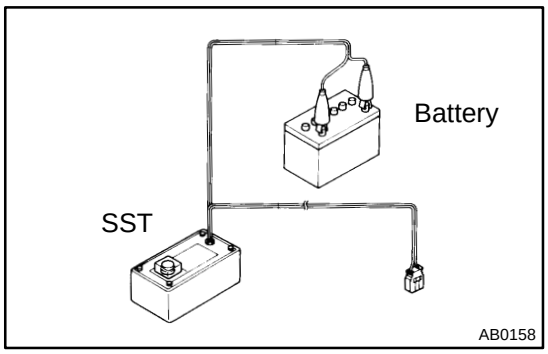

1. SEAT BELT PRETENSIONER ACTIVATION WHEN SCRAPPING VEHICLE

HINT:
Have a battery ready as the power source to activate the seat belt pretensioner.

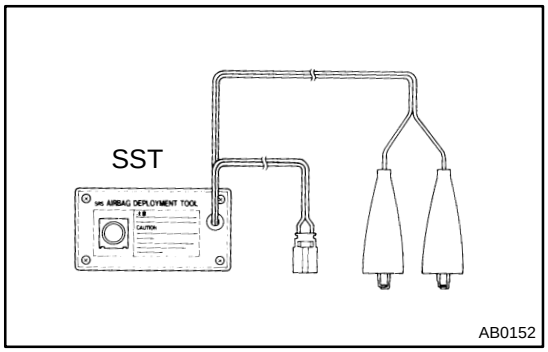

(a) Check the functioning of SST.

CAUTION:
When activating the seat belt pretensioner, always use the specified SST: SRS Airbag Deployment Tool.

SST 09082–00700, 09082–00740

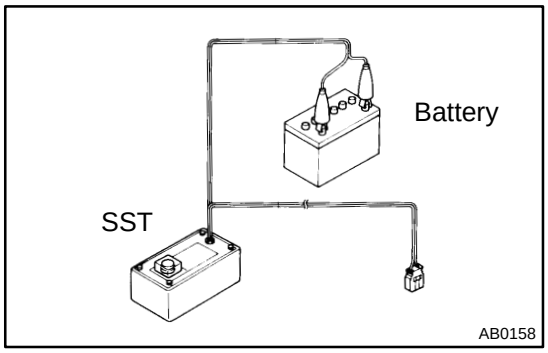

(1) Connect the SST to the battery.
Connect the red clip of the SST to the battery positive (+) terminal and the black clip to the battery negative (–) terminal.

HINT:
Do not connect the yellow connector which will be connected with the seat belt pretensioner.

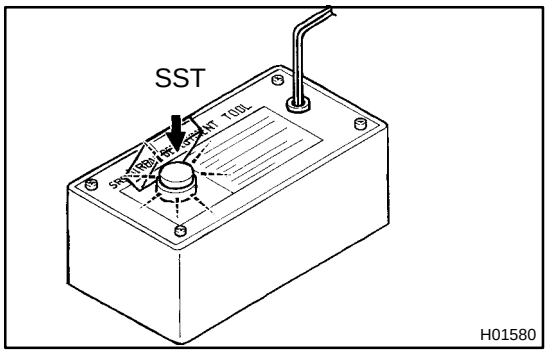

(2) Press the SST activation switch, and check the LED of the SST activation switch lights up.

CAUTION:
If the LED lights up when the activation switch is not being pressed, SST malfunction is probable, so definitely do not use the SST.

(b) Standard cab:
Disconnect the pretensioner connector.
(1) Remove the front door scuff plate.
(2) Remove the front pillar garnish.
(3) Remove the back panel upper garnish.
(4) Remove the front seat outer belt floor anchor.
(5) Remove the quarter trim.

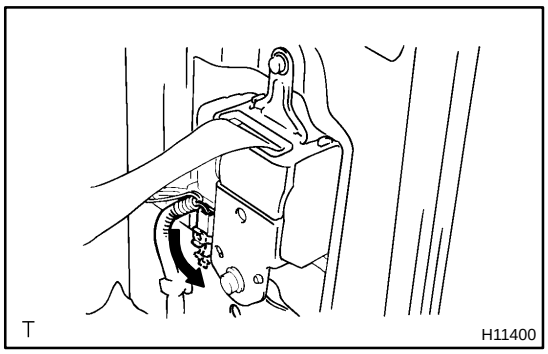

(6) Disconnect the pretensioner connector as shown in the illustration.

(c) Access cab:

Disconnect the pretensioner connector.

(1) Remove the front door scuff plate.
(2) Remove the rear door scuff plate.
(3) Remove the front seat outer belt floor anchor.
(4) Remove the front seat outer belt shoulder belt.
(5) Remove the roof side rail garnish.
(6) Remove the front door rear scuff plate and cover.

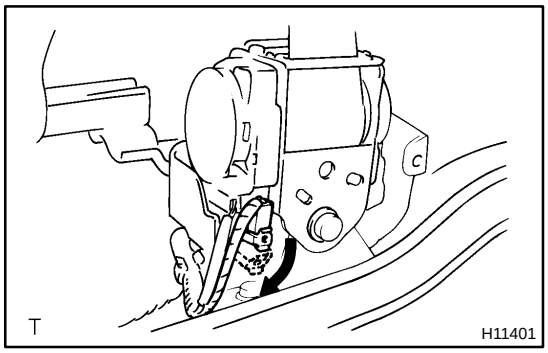

(7) Disconnect the pretensioner connector as shown in the illustration.

(d) Install the SST.

(1) Buckle the front seat belt and check that there is no looseness and slack in the front seat inner belt and front seat outer belt.

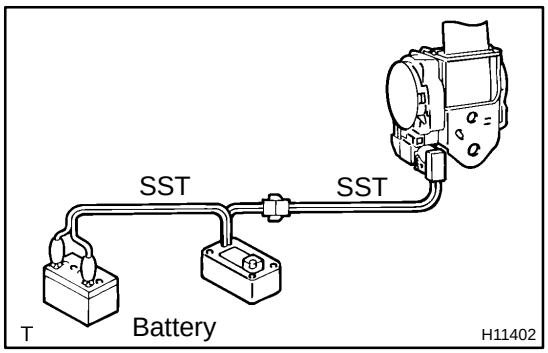

(2) Connect the 2 SST, then connect them to the seat belt pretensioner.

SST 09082–00700, 09082–00740

NOTICE:

To avoid damaging the SST connector and wire harness, do not lock the secondary lock of the twin lock.

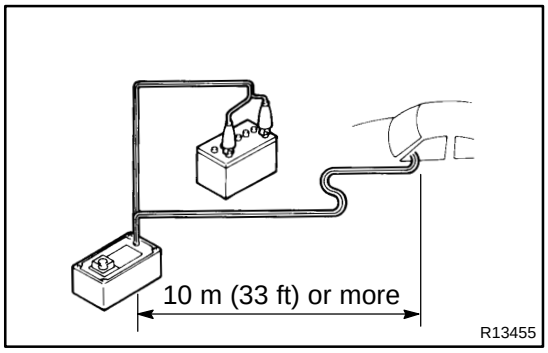

(3) Move the SST to at least 10 m (33 ft) away from the front of the vehicle.

(4) Close all the doors and windows of the vehicle.

NOTICE:

Take care not to damage the SST wire harness.

(5) Connect the SST red clip to the battery positive (+) terminal and the black clip to the negative (–) terminal.

(e) Activate the seat belt pretensioner.
(1) Confirm that no one is inside the vehicle or within 10 m (33 ft) area around of the vehicle.
(2) Press the SST activation switch and activate the seat belt pretensioner.

HINT:
The seat belt pretensioner operates simultaneously as the LED of the SST activation switch lights up.

(f) Dispose of front seat outer belt (with seat belt pretensioner).

CAUTION:
- **The front seat outer belt is very hot when the seat belt pretensioner is activated, so leave it alone for at least 30 minutes after activation.**
- **Use gloves and safety glasses when handling a front seat outer belt with activated seat belt pretensioner.**
- **Always wash your hands with water after completing the operation.**
- **Do not apply water, etc. to a front seat outer belt with activated seat belt pretensioner.**

HINT:
When scrapping a vehicle, activate the seat belt pretensioner and scrap the vehicle with activated front seat outer belt still installed.

2. ACTIVATION WHEN DISPOSING OF FRONT SEAT OUTER BELT ONLY

NOTICE:
- **When disposing of the front seat outer belt (with seat belt pretensioner) only, never use the customer's vehicle to activate the seat belt pretensioner.**
- **Be sure to follow the procedure given on the next page when activating the seat belt pretensioner.**

HINT:
Have a battery ready as the power source when activating the seat belt pretensioner.

(a) Remove the front seat outer belt. (See page BO–133)

HINT:
Cut the belt near the seat belt retractor.

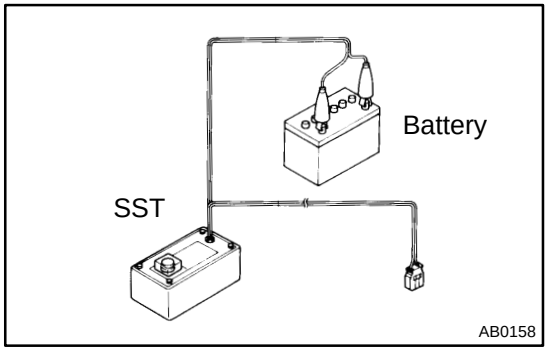

(b) Check the functioning of SST. (See step 1–(a))
SST 09082–00700, 09082–00740

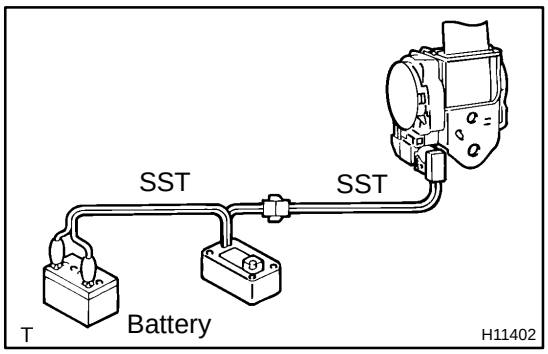

(c) Install the SST.

(1) Connect the 2 SST, then connect them to the seat belt pretensioner.

SST 09082–00700, 09082–00740

NOTICE:

To avoid damaging the SST connector and wire harness, do not lock the secondary lock of the twin lock.

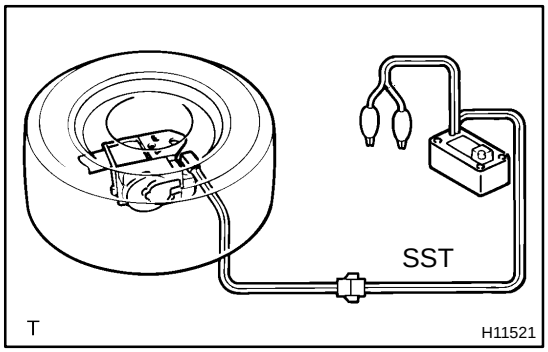

(2) Place the front seat outer belt on the ground and cover it with the disc wheel with tire.

NOTICE:

Place the front seat outer belt as shown in the illustration.

(3) Move the SST at least 10 m (33 ft) away from the disc wheel.

NOTICE:

Take care not to damage the SST wire harness.

(d) Activate the seat belt pretensioner.

(1) Connect the SST red clip to the battery positive (+) terminal and black clip to the battery negative (–) terminal.

(2) Check that no one is within 10 m (33 ft) area around the disc wheel.

(3) Press the SST activation switch and activate the seat belt pretensioner.

HINT:

The seat belt pretensioner operates simultaneously as the LED of the SST activation switch lights up.

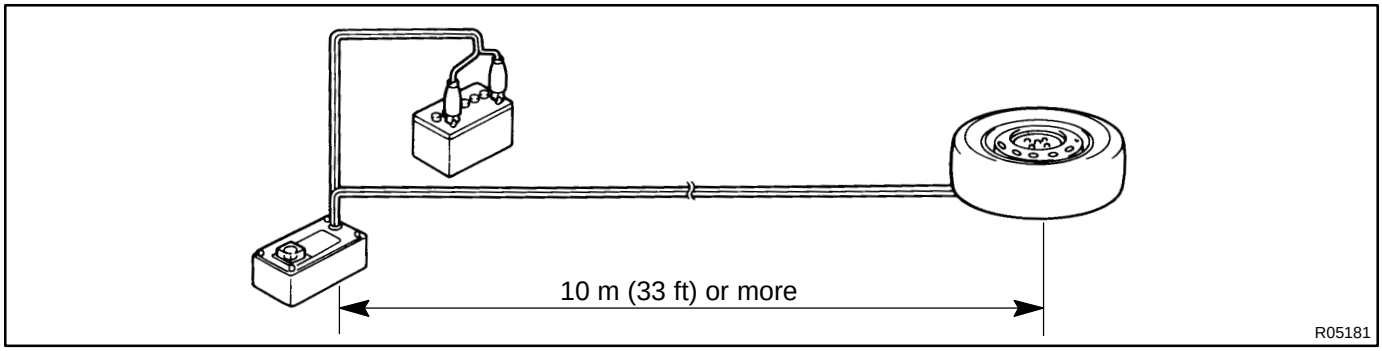

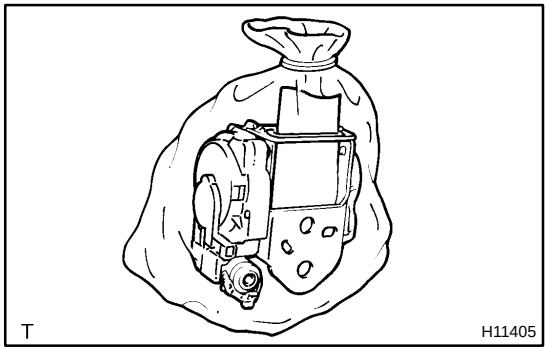

(e) Dispose of front seat outer belt (with seat belt pretensioner).

CAUTION:

- **The front seat outer belt is very hot when the seat belt pretensioner is activated, so leave it alone for at least 30 minutes after activation.**
- **Use gloves and safety glasses when handling a front seat outer belt with activated seat belt pretensioner.**
- **Always wash your hands with water after completing the operation.**

▲ **Do not apply water, etc. to a front seat outer belt with activated seat belt pretensioner.**

(1) Remove the disc wheel and SST.

(2) Place the front seat outer belt in a vinyl bag, tie the end tightly and dispose of it in the same way as other general parts.

BO0KP–02

REPLACEMENT

REPLACE REQUIREMENTS

In the following cases, replace the seat belt pretensioner.

- If the seat belt pretensioner has been activated.
- If the seat belt pretensioner has been found to be faulty in troubleshooting.
- If the front seat outer belt has been found to be faulty during checking items 1–(b) or 2–(b). (See page BO–140)
- If the front seat outer belt has been dropped.

CAUTION:

For removal and installation of the seat belt pretensioner, see page BO–137 and BO–149.

Be sure to follow the correct procedure.

BO2G7–01

INSTALLATION

NOTICE:

- **Never use seat belt pretensioner from another vehicle. When replacing parts, replace them with new parts.**
- **Make sure that the front seat outer belt is installed with the specified torque.**
- **If the front seat outer belt has been dropped, or there are cracks, dents or other defects in the case or connector, replace the front seat outer belt with a new one.**
- **When installing the front seat outer belt, take care that the wiring does not interfere with other parts and is not pinched between other parts.**

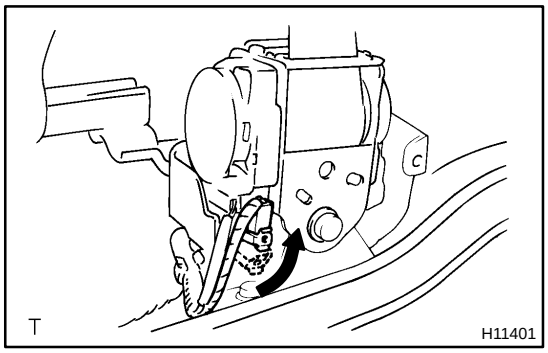

1. Access cab:

INSTALL FRONT SEAT OUTER BELT

(a) Install the retractor of front seat outer belt.

(1) Install the retractor of front seat outer belt with the bolt.

Torque: 42 N·m (430 kgf·cm, 31 ft·lbf)

(2) Connect the pretensioner connector as shown in the illustration.

(b) Install the front door rear scuff plate and cover.

(1) Install the front door rear scuff plate with the clip.

(2) Install the cover with the clip.

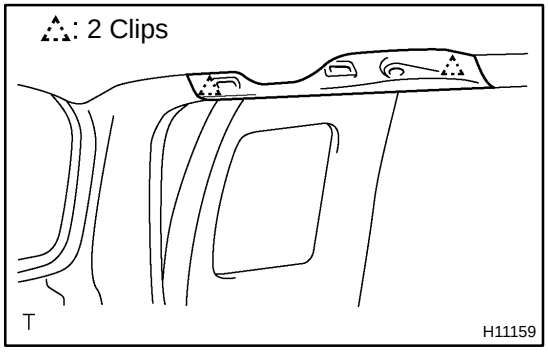

(c) Install the roof side rail garnish.

(1) Install the roof side rail garnish.

(2) Using a torx driver, install the assist grip with the 2 torx screws.

Torx driver: T30 (Part No. 09041–00030 or locally manufactured tool)

(3) Install the caps.

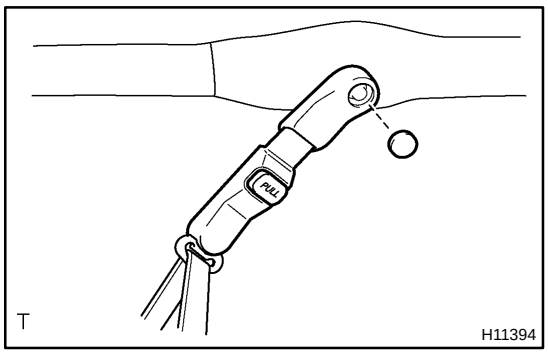

(d) Install the front seat outer belt shoulder anchor.
(1) Install the front seat outer belt shoulder anchor with the bolt.
Torque: 42 N·m (430 kgf·cm, 31 ft·lbf)
(2) Install the cap.
(e) Install the front seat outer belt floor anchor with the bolt.
Torque: 42 N·m (430 kgf·cm, 31 ft·lbf)
(f) Install the rear door scuff plate with the 3 screws.
(g) Install the front door scuff plate with the 4 screws.

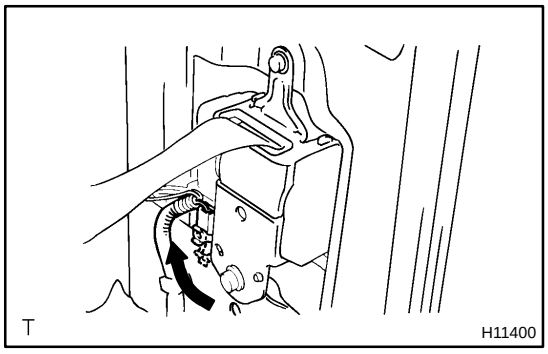

2. Standard cab:
INSTALL FRONT SEAT OUTER BELT
(a) Install the retractor of front seat outer belt.
(1) Install the retractor of front seat outer belt with the 2 bolts.
Torque:
Upper bolt: 8.3 N·m (85 kgf·cm, 74 in.·lbf)
Lower bolt: 42 N·m (430 kgf·cm, 31 ft·lbf)
(2) Connect the pretensioner connector as shown in the illustration.

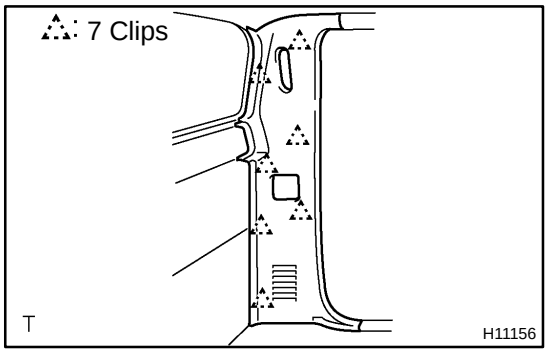

(b) Install the quarter trim.
(1) Install the quarter trim.
(2) Install the front seat outer belt shoulder anchor with the bolt.
Torque: 42 N·m (430 kgf·cm, 31 ft·lbf)
(3) Install the cap.
(4) Install the quarter trim belt hole cover.
(c) Install the front seat outer belt floor anchor with the bolt.

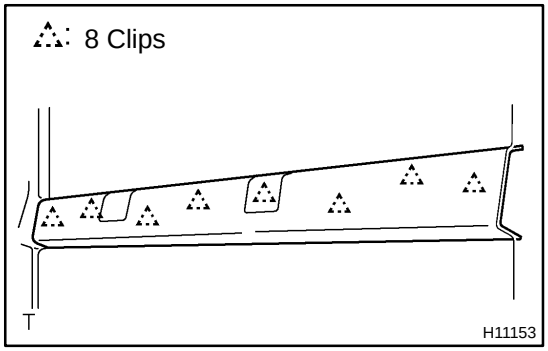

(d) Install the back panel upper garnish.

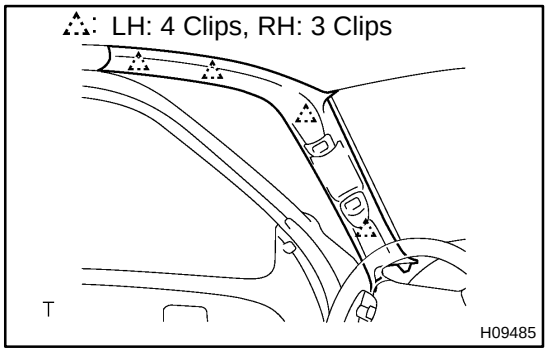

(e) Install the front pillar garnish.
(1) Install the front pillar garnish.

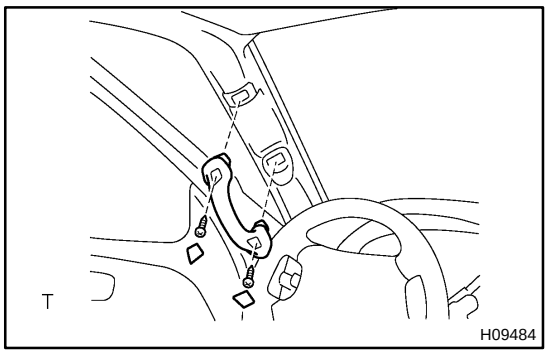

(2) Using a torx driver, install the assist grip with the 2 torx screws.

Torx driver: T30 (Part No. 09041–00030 or locally manufactured tool)

(3) Install the caps.

(f) Install the front door scuff plate with 5 screws.

BODY ELECTRICAL SYSTEM

BE01E–04

PRECAUTION

Take care to observe the following precautions when performing inspections or removal and replacement of body electrical related parts.

1. LIGHTING SYSTEM

Halogen bulbs have pressurized gas inside and require special handling.
They can burst or scatter if scratched or dropped. Hold a bulb only by its plastic or metal case.
Don't touch the glass part of a bulb with bare hands.

2. SRS (SUPPLEMENTAL RESTRAINT SYSTEM)

The TOYOTA TUNDRA is equipped with an SRS (Supplemental Restraint System) such as the driver airbag. Failure to carry out service operations in the correct sequence could cause the SRS to unexpectedly deploy during servicing, possibly leading to a serious accident. Before servicing (including removal or installation of parts, inspection or replacement), be sure to read the precautionary notices in the RS section.

3. AUDIO SYSTEM

If the battery negative (–) terminal is disconnected, the preset AM, FM 1 and FM 2 stations stored in memory are erased, so be sure to note the stations and reset them after the battery terminal is reconnected.

4. MOBILE COMMUNICATION SYSTEM

If the vehicle is equipped with a mobile communication system, refer to precautions in the IN section.

BE04Q–15

TROUBLESHOOTING

PROBLEM SYMPTOMS TABLE

IGNITION SWITCH AND KEY UNLOCK WARNING SWITCH:

Symptom	Suspect area	See page
Ignition switch cannot set to each position.	1. Ignition Switch 2. Power Source Circuit	BE–15 –
Key unlock warning system does not operate.	1. DOME Fuse 2. Key Unlock Warning Switch 3. Door Courtesy Switch 4. Meter Circuit Plate 5. Wire Harness 6. Integration Relay (Driver Side J/B)	BE–11 BE–15 BE–33 BE–48 – BE–71

HEADLIGHT AND TAILLIGHT SYSTEM (w/ Daytime Running Light):

Symptom	Suspect area	See page
Only one headlight does not light up.	1. HEAD (LL, RL) or H–LP (LH, RH) Fuse 2. Headlight Bulb 3. Wire Harness	BE–11 – –
Headlights do not light up.	1. HEAD (LL, RL) or H–LP (LH, RH) Fuse 2. TAIL Fuse 3. ECU–IG Fuse 4. Headlight Relay 5. Dimmer Relay 6. Integration Relay 7. Daytime Running Light No. 4 Relay 8. Daytime Running Light Resistor 9. Light Control Switch 10. Headlight Bulb 11. Wire Harness	BE–11 BE–11 BE–11 BE–18 BE–18 BE–18 BE–18 BE–18 BE–18 – –
Lo–beam does not operate.	1. HEAD (LL, RL) Fuse 2. TAIL Fuse 3. ECU–IG Fuse 4. Headlight Relay 5. Dimmer Relay 6. Integration Relay 7. Daytime Running Light No. 4 Relay 8. Daytime Running Light Resistor 9. Light Control Switch 10. Headlight Bulb 11. Wire Harness	BE–11 BE–11 BE–11 BE–18 BE–18 BE–18 BE–18 BE–18 BE–18 – –
Hi–beam does not operate.	1. H–LP (LH, RH) Fuse 2. TAIL Fuse 3. ECU–IG Fuse 4. Headlight Relay 5. Dimmer Relay 6. Integration Relay 7. Daytime Running Light No. 4 Relay 8. Daytime Running Light Resistor 9. Light Control Switch 10. Headlight Bulb 11. Wire Harness	BE–11 BE–11 BE–11 BE–18 BE–18 BE–18 BE–18 BE–18 BE–18 – –

Flash does not operate.	1. H–LP (LH, RH) Fuse 2. TAIL Fuse 3. ECU–IG Fuse 4. Headlight Relay 5. Dimmer Relay 6. Integration Relay 7. Daytime Running Light No. 4 Relay 8. Daytime Running Light Resistor 9. Light Control Switch 10. Headlight Bulb 11. Wire Harness	BE–11 BE–11 BE–11 BE–18 BE–18 BE–18 BE–18 BE–18 BE–18 – –
Auto turn–off system does not operate.	1. TAIL Fuse 2. ECU–IG Fuse 3. Door Courtesy Switch 4. Integration Relay 5. Ignition Switch 6. Wire Harness	BE–11 BE–11 BE–33 BE–18 BE–15 –
Headlight does not light up with engine running and light control SW OFF.	1. TAIL Fuse 2. ECU–IG Fuse 3. Integration Relay 4. Generator 5. Wire Harness	BE–11 BE–11 BE–18 – –
Only one taillight does not light up.	1. Bulb 2. Wire Harness	– –
Taillights do not light up.	1. TAIL Fuse 2. Light Control Switch 3. Wire Harness	BE–11 BE–18 –

HEADLIGHT AND TAILLIGHT SYSTEM (w/o Daytime Running Light):

Symptom	Suspect Area	See page
Only one headlight does not light up.	1. HEAD (LL, RL) Fuse 2. Headlight Bulb 3. Wire Harness	BE–11 – –
Headlights do not light up.	1. HEAD (LL, RL) Fuse 2. Headlight Relay 3. Integration Relay 4. Light Control Switch 5. Headlight Bulb 6. Wire Harness	BE–11 BE–18 BE–18 BE–18 – –
Lo–beam does not operate.	1. Headlight Bulb 2. Integration Relay 3. Headlight Dimmer Switch 4. Light Control Switch 5. Wire Harness	– BE–18 BE–18 BE–18 –
Hi–beam does not operate.	1. Headlight Bulb 2. Integration Relay 3. Light Control Switch 4. Wire Harness	– BE–18 BE–18 –
Flash does not operate.	1. Headlight Dimmer Switch 2. Wire Harness 3. Headlight Bulb	BE–18 – –

Auto turn–off system does not operate.	1. TAIL Fuse 2. ECU–IG Fuse 3. Door Courtesy Switch 4. Ignition Switch 5. Integration Relay 6. Wire Harness	BE–11 BE–11 BE–33 BE–15 BE–18 –
Only one taillight does not light up.	1. Taillight Bulb 2. Wire Harness	– –
Taillights do not light up.	1. TAIL Fuse 2. Light Control Switch 3. Integration Relay 4. Wire Harness 5. Taillight Bulb	BE–11 BE–18 BE–18 – –

FOG LIGHT SYSTEM:

Symptom	Suspect area	See page
Fog lights do not light up with light control switch in HEAD (Headlights are normal).	1. FOG Fuse 2. Fog Light Relay 3. Integration Relay 4. Fog Light Switch 5. Wire Harness	BE–11 BE–26 BE–18 BE–26 –
Fog lights do not light up with light control switch in HEAD (Headlights do not light up).	1. Other Parts*1 2. Wire Harness	– –
Only one light does not light up.	1. Bulb 2. Wire Harness	– –

*1: Inspect the headlight system.

TURN SIGNAL AND HAZARD WARNING SYSTEM:

Symptom	Suspect area	See page
Turn signal lights do not light up.	1. TURN Fuse 2. HAZ Fuse 3. Ignition Switch 4. Turn Signal Switch 5. Turn Signal Flasher 6. Wire Harness	BE–11 BE–11 BE–15 BE–29 BE–29 –
Hazard warning lights do not light up (Turn signal lights are normal).	1. Hazard Warning Switch 2. Wire Harness	BE–29 –
Hazard lights and turn signals do not light up.	1. Turn Signal Flasher 2. Wire Harness	BE–29 –
Turn signal light does not light up on either side.	1. Turn Signal Switch 2. Wire Harness	BE–29 –
Only one bulb does not light up.	1. Bulb 2. Wire Harness	– –

INTERIOR LIGHT SYSTEM:

Symptom	Suspect area	See page
Interior light does not light up.	1. DOME Fuse 2. Bulb 3. Interior Light Assembly 4. Wire Harness	BE–11 – BE–33 –
Front personal light does not light up.	1. DOME Fuse 2. Bulb 3. Front Personal Light 4. Wire Harness	BE–11 – BE–33 –

Vanity light does not light up.	1. DOME Fuse 2. Bulb 3. Vanity Light 4. Wire Harness	BE–11 – BE–33 –
Door courtesy light does not light up.	1. DOME Fuse 2. Bulb 3. Door Courtesy Switch 4. Wire Harness	BE–11 – BE–33 –

BACK–UP LIGHT SYSTEM:

Symptom	Suspect area	See page
Back–up lights do not light up.	1. GAUGE Fuse 2. Ignition Switch 3. Back–up Light Switch (M/T) 4. Park/Neutral Position Switch (A/T) 5. Back–up Light Relay (A/T) 6. Bulb 7. Wire Harness	BE–11 BE–15 BE–37 DI–408 BE–37 – –
Back–up lights remain ON.	1. Back–up Light Switch (M/T) 2. Park/Neutral Position Switch (A/T) 3. Wire Harness	BE–37 DI–408 –
Only one light does not light up.	1. Bulb 2. Wire Harness	– –

STOP LIGHT SYSTEM:

Symptom	Suspect area	See page
Stop lights do not light up.	1. STOP Fuse 2. Stop Light Switch 3. Wire Harness	BE–11 BE–39 –
Stop lights remains ON.	1. Stop Light Switch 2. Wire Harness	BE–39 –
Only one light does not light up.	1. Bulb 2. Wire Harness	– –

CARGO LIGHT SYSTEM:

Symptom	Suspect area	See page
Cargo light does not light up.	1. CARGO LP Fuse 2. Bulb 3. Cargo Light Switch 4. Integration Relay 5. Wire Harness	BE–11 – BE–41 BE–71 –

WIPER AND WASHER SYSTEM:

Symptom	Suspect area	See page
Wipers and washer do not operate.	1. WIP Fuse 2. Ignition Switch 3. Wiper Switch 4. Wiper Motor 5. Wire Harness	BE–11 BE–15 BE–43 BE–43 –
Wipers do not operate in INT.	1. Wiper Switch 2. Wiper Motor 3. Wire Harness	BE–43 BE–43 –
Washer motor does not operate.	1. Washer Switch 2. Washer Motor 3. Wire Harness	BE–43 BE–43 –

COMBINATION METER (Meter, Gauges and Illumination Lights):

Symptom	Suspect area	See page
Tachometer, fuel gauge and engine coolant temperature gauge do not operate.	1. GAUGE Fuse 2. Meter Circuit Plate 3. Wire Harness	BE–11 BE–48 –
Speedometer does not operate.	1. Vehicle Speed Sensor 2. Meter Circuit Plate 3. Wire Harness	BE–52 BE–48 –
Tachometer does not operate.	1. Igniter (5VZ–FE) 2. ECM (2UZ–FE) 3. Meter Circuit Plate 4. Wire Harness	– – BE–48 –
Fuel gauge does not operate or operates abnormally.	1. Fuel Receiver Gauge 2. Fuel Sender Gauge 3. Meter Circuit Plate 4. Wire Harness	BE–52 BE–52 BE–48 –
Engine coolant temperature gauge does not operate or operates abnormally.	1. Engine Coolant Temperature Receiver Gauge 2. Engine Coolant Temperature Sender Gauge 3. Meter Circuit Plate 4. Wire Harness	BE–52 BE–52 BE–48 –
Voltmeter does not operate.	1. Voltmeter 2. Meter Circuit Plate 3. Wire Harness	BE–52 BE–52 –
All illumination lights do not light up.	1. TAIL Fuse 2. Integration Relay 3. Light Control Rheostat 4. Wire Harness	BE–11 BE–18 BE–52 –
Brightness does not change even when rheostat is turned.	1. Bulb 2. Wire Harness	– –
Only one illumination light does not light up.	1. Bulb 2. Wire Harness	– –

COMBINATION METER (Warning Lights):

Symptom	Suspect area	See page
Warning lights do not light up (Except discharge warning light)	1. Bulb 2. GAUGE Fuse 3. Meter Circuit Plate 4. Wire Harness	– BE–11 BE–48 –
Low oil pressure warning light does not light up.	1. Bulb 2. Low Oil Pressure Warning Switch 3. Meter Circuit Plate 4. Wire Harness	– BE–52 BE–48 –
Fuel level warning light does not light up.	1. Bulb 2. Fuel Level Warning Switch 3. Meter Circuit Plate 4. Wire Harness	– BE–52 BE–48 –
ABS warning light does not light up.	1. Bulb 2. ABS ECU 3. Wire Harness	– DI–446 –
Seat belt warning light does not light up.	1. Bulb 2. Seat Belt Buckle Switch 3. Meter Circuit Plate 4. Wire Harness	– BE–52 BE–48 –

Discharge warning light does not light up.	1. IGN Fuse 2. Bulb 3. Meter Circuit Plate 4. Wire Harness 5. Generator	BE–11 – BE–48 – –
Brake warning light does not light up.	1. Bulb 2. Parking Brake Switch 3. Brake Fluid Level Warning Switch 4. Meter Circuit Plate 5. Wire Harness	– BE–52 BE–52 BE–48 –
ATF temperature warning light does not light up.	1. Bulb 2. ATF Temperature Sensor 3. ECM 4. Meter Circuit Plate 5. Wire Harness	– DI–412 – BE–48 –
SRS warning light does not light up.	1. ECU–B Fuse 2. Bulb 3. Airbag Sensor Assembly 4. Meter Circuit Plate 5. Wire Harness	BE–11 – – BE–48 –
Open door warning light does not light up.	1. DOME Fuse 2. Bulb 3. Door Courtesy Switch 4. Meter Circuit Plate 5. Wire Harness	BE–11 – BE–33 BE–48 –
Washer level warning light does not light up.	1. Bulb 2. Washer Fluid Level Warning Switch 3. Meter Circuit Plate 4. Wire Harness	– BE–52 BE–48 –

COMBINATION METER (Indicator Lights):

Symptom	Suspect area	See page
”4LO” indicator light does not light up.	1. Bulb 2. 4WD Control ECU (2UZ–FE) 3. Meter Circuit 4. Integration Control Panel 5. Wire Harness	– TR–42 BE–48 AC–71 –
”4HI/4WD” indicator light does not light up.	1. Bulb 2. A.D.D. Actuator (5VZ–FE) 3. 4WD Control ECU (2UZ–FE) 4. Meter Circuit Plate 5. Integration Control Panel 6. Wire Harness	– – TR–42 BE–48 AC–71 –
O/D OFF indicator light does not light up.	1. Bulb 2. O/D Main Switch 3. ECM 4. Meter Circuit Plate 5. Wire Harness	– DI–440 DI–1 DI–192 BE–48 –
Cruise control indicator light does not light up.	1. Bulb 2. Cruise Control ECU 3. Meter Circuit Plate 4. Wire Harness	– DI–638 DI–662 BE–48 –

Hi–beam indicator light does not light up.	1. Bulb 2. Headlight and Taillight System 3. Meter Circuit Plate 4. Wire Harness	– BE–18 BE–48 –
Turn indicator light does not light up.	1. Bulb 2. Turn Signal and Hazard Warning System 3. Meter Circuit Plate 4. Wire Harness	– BE–29 BE–48 –
Shift indicator light does not light up.	1. Bulb 2. Park/Neutral Position Switch 3. Meter Circuit Plate 4. Wire Harness	– DI–408 BE–48 –
Malfunction indicator light does not light up.	1. Bulb 2. ECM 3. Meter Circuit Plate 4. Wire Harness	– – BE–48 –
Only one shift indicator light does not light up.	1. Bulb 2. Meter Circuit Plate	– BE–48

MIRROR HEATER SYSTEM:

Symptom	Suspect area	See page
Mirror heater system does not operate.	1. GAUGE Fuse 2. Mirror Heater Switch 3. Mirror Heater Relay 4. Wire Harness	BE–11 BE–62 BE–62 –

POWER WINDOW CONTROL SYSTEM:

Symptom	Suspect area	See page
Power window does not operate (All) (Power door lock does not operate).	1. ECU–IG Fuse 2. POWER Relay 3. Ignition Switch 4. Integration Relay	BE–11 BE–64 BE–15 BE–64
Power window does not operate (All) (Power door lock is normal).	1. Power Window Master Switch 2. Wire Harness	BE–64 –
One–touch power window system does not operate.	Power Window Master Switch	BE–64
Only one window glass does not move.	1. Power Window Master Switch 2. Power Window Control Switch 3. Power Window Motor 4. Wire Harness	BE–64 BE–64 BE–64 –
Window lock system does not operate.	Power Window Master Switch	BE–64
Key–off power window does not operate.	1. ECU–IG Fuse 2. POWER Relay 3. Integration Relay 4. Ignition Switch 5. Door Courtesy Switch 6. Wire Harness	BE–11 BE–64 BE–71 BE–15 BE–33 –

POWER SLIDE BACK WINDOW SYSTEM:

Symptom	Suspect area	See page
Power slide back window does not operate (Power window does not operate).	1. ECU–IG Fuse 2. POWER Relay 3. Ignition Switch 4. Integration Relay	BE–11 BE–64 BE–15 BE–71
Power slide back window does not operate (Power window is normal).	1. Power Slide Back Window Switch 2. Power Slide Back Window Motor 3. Wire Harness	BE–69 BE–69 –

POWER DOOR LOCK CONTROL SYSTEM:

Symptom	Suspect area	See page
Door lock system does not operate at all.	1. GAUGE Fuse 2. POWER Fuse 3. Integration Relay 4. Wire Harness	BE–11 BE–11 BE–71 –
Door lock system does not operate by manual switch.	1. Power Door Lock Control Switch 2. Door Lock Manual Switch 3. Door Unlock Detection Switch 4. Integration Relay 5. Wire Harness	BE–71 BE–71 BE–71 BE–71 –
Door lock system does not operate by door key.	1. Door Key Lock and Unlock Switch 2. Integration Relay 3. Wire Harness 4. Door Lock Link Disconnected	BE–71 BE–71 – –
Key confine prevention function does not operate.	1. Key Unlock Warning Switch 2. Door Courtesy Switch 3. Integration Relay 4. Wire Harness	BE–71 BE–33 BE–71 –
Only one door lock does not operate.	1. Door Lock Motor 2. Wire Harness	BE–71 –

TOYOTA VEHICLE INTRUSION PROTECTION SYSTEM

Refer to the DI section for troubleshooting.

WIRELESS DOOR LOCK CONTROL SYSTEM

HINT:

Troubleshooting of the wireless door lock control system is based on the premise that the door lock control system is operating normally. Accordingly, before troubleshooting the wireless door lock control system, first make certain that the door lock control system is operating normally.

Symptom	Suspect area	See page
All functions of wireless door lock control system do not operate.	1. Transmitter 2. Wire Harness 3. TVIP ECU	BE–96 – DI–595

POWER SEAT CONTROL SYSTEM:

Symptom	Suspect area	See page
Power seat does not operate.	1. ECU–IG Fuse 2. Power Seat Swtich 3. Wire Harness	BE–11 BE–100 –
Slide operation does not operate.	1. Power Seat Switch 2. Slide Motor 3. Wire Harness	BE–100 BE–100 –

Front vertical operation does not operate.	1. Power Seat Switch 2. Front Vertical Motor 3. Wire Harness	BE–100 BE–100 –
Rear vertical operation does not operate.	1. Power Seat Switch 2. Rear Vertical Motor 3. Wire Harness	BE–100 BE–100 –
Reclining operation does not operate.	1. Power Seat Switch 2. Reclining Motor 3. Wire Harness	BE–100 BE–100 –
Lumbar support operation does not operate.	1. Power Seat Switch (Lumbar Support Switch) 2. Lumbar Support Motor 3. Wire Harness	BE–100 BE–100 –

POWER MIRROR CONTROL SYSTEM:

Symptom	Suspect area	See page
Mirror does not operate.	1. ACC Fuse 2. ECU–B Fuse (2UZ–FE) 3. ACC CUT Relay (2UZ–FE) 4. Ignition Switch 5. Mirror Switch 6. Mirror Motor 7. ECM 8. Wire Harness	BE–11 BE–11 BE–107 BE–15 BE–107 BE–107 – –
Mirror operates abnormally.	1. Mirror Switch 2. Mirror Motor 3. Wire Harness	BE–107 BE–107 –

AUDIO SYSTEM

Symptom	Suspect area	See page
Audio system operates abnormally.	TROUBLESHOOTINGS	BE–113

CLOCK SYSTEM (in A/C Control Panel)

Symptom	Suspect area	See page
Clock does not operate.	TROUBLESHOOTING NO. 1	BE–147
Clock loses or gains time.	TROUBLESHOOTING NO. 2	BE–147

POWER SOURCE

LOCATION

BE16Z–02

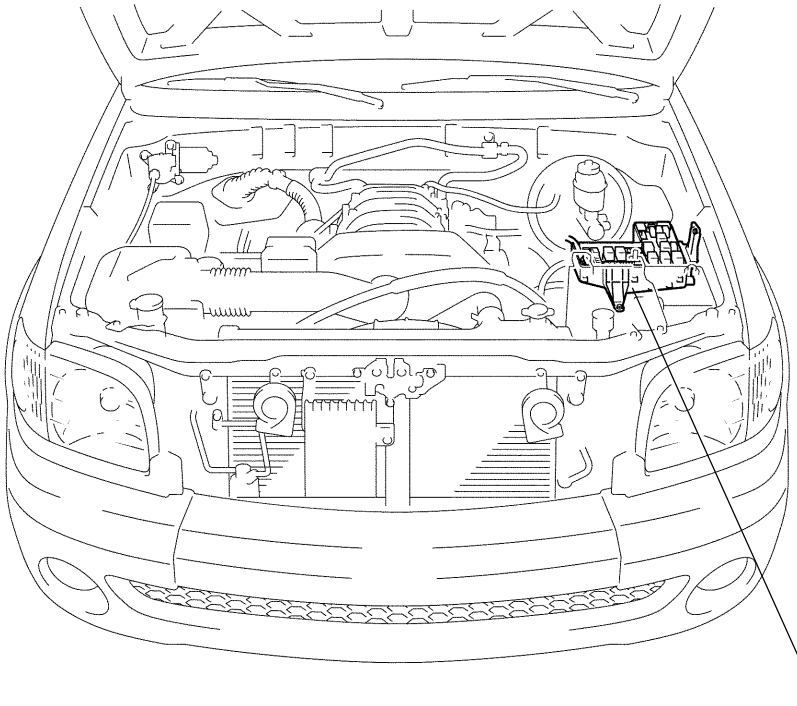

Engine Room Relay Block

Driver Side Junction Block
▲Integration Relay

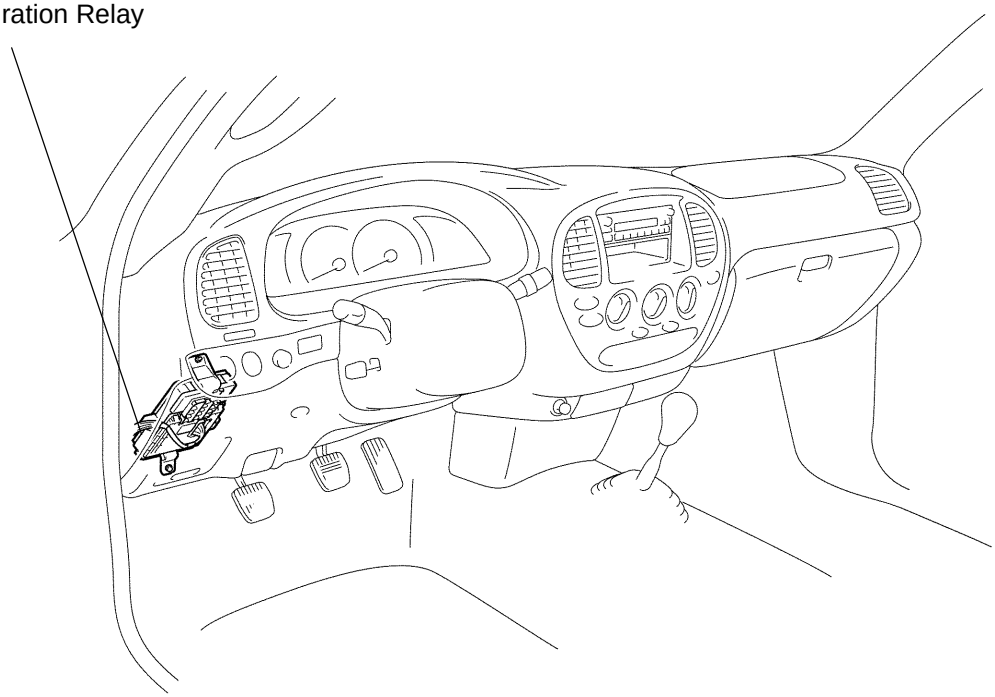

P

I24701

Engine Room Relay Block:

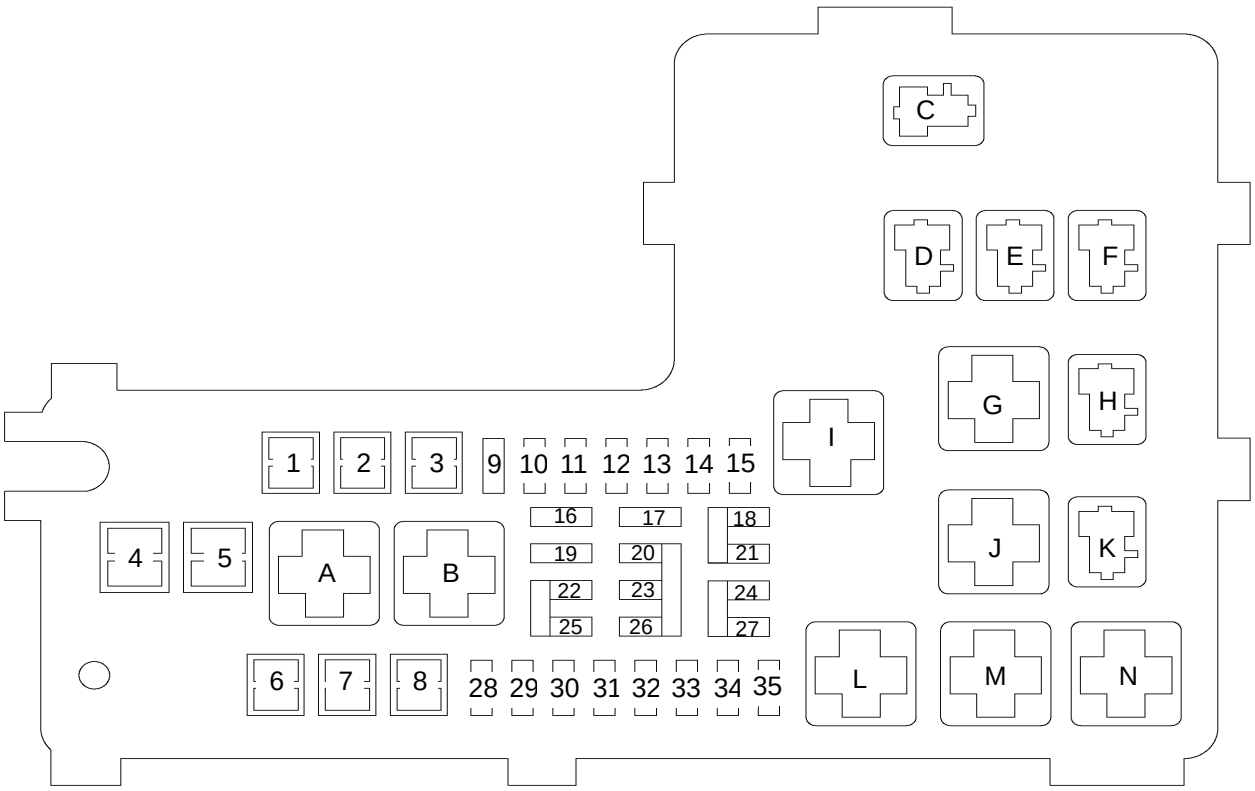

Fuses:

1. ABS2 M–fuse	40 A
2. ABS3 M–fuse	30 A
2. ST3 M–fuse	30 A
4. ALT H–fuse*1	140 A
4. ALT H–fuse*2	100 A
5. –	
6. AM1 M–fuse	40 A
7. HTR M–fuse	50 A
8. J/B M–fuse	50 A
9. ALT–S Fuse	7.5 A
10. ETCS Fuse*3	15 A
10. ETCS Fuse*4	10 A
11. HAZ Fuse	15 A
12. EFI NO.1 Fuse	15 A
13. AM2 Fuse	30 A
14. TOWING Fuse	30 A
15. SORT PIN	
16. A/C Fuse	10 A
17. –	
18. HEAD LL Fuse	10 A
19. EFI NO.2 Fuse	10 A
20. RADIO Fuse	20 A
21. HEAD RL Fuse	10 A
22. PWR OUTLET2 Fuse	15 A
23. DOME Fuse	10 A
24. H–LP LH Fuse	10 A
25. PWR OUTLET1 Fuse	15 A
26. ECU–B Fuse	5 A
27. H–LP RH Fuse	10 A
28. MIR HTR Fuse	15 A
29. FOG Fuse	15 A
30. TOW BRK Fuse	30 A
31. SUB BATT Fuse	30 A
32. TOW TAIL Fuse	30 A
33. –	
34. –	
35. –	

Relays:

A. DRL NO.4 Relay
B. DIMMER Relay
C. ST Relay
D. F/PMP Relay
E. C/OPN Relay
F. EFI Relay
G. TOW TAIL Relay
H. H–LP Relay
I. SUB BATT Relay
J. MIR HTR Relay
K. POWER OUTLET Relay
L. FOG Relay
M. HTR Relay

*1: Towing Package
*2: Except Towing package
*3: 5VZ–FE
*4: 2UZ–FE

Y

I24632

Driver Side Junction Block:

w/ Dattime Running Light

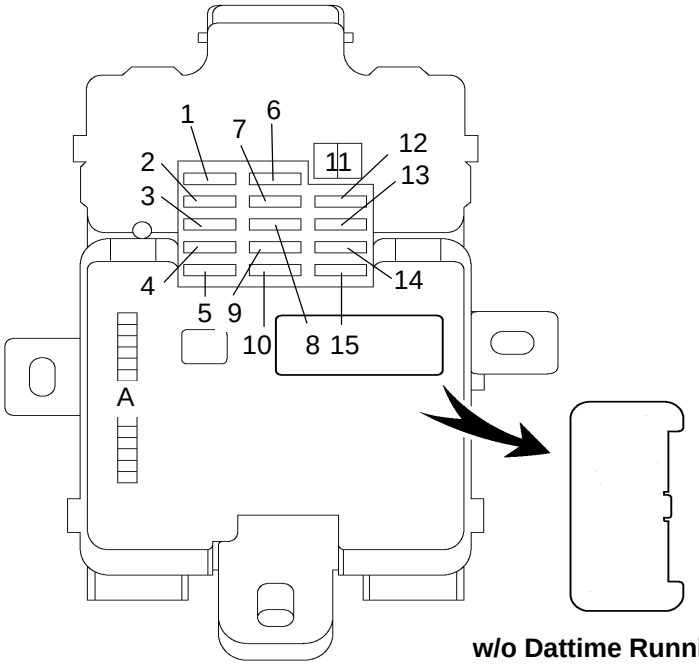

Fuses:

1. –	
2. WIP Fuse	20 A
3. TURN Fuse	5 A
4. ECU–IG Fuse	5 A
5. 4WD Fuse	20 A
6. ACC Fuse	15 A
7. GAUGE Fuse	10 A
8. IGN Fuse	5 A
9. CARGO LP Fuse	5 A
10. TAIL Fuse	15 A
11. POWER M–fuse	30 A
12. OBD Fuse	7.5 A
13. HORN Fuse	10 A
14. STA Fuse	5 A
15. STOP Fuse	15 A

w/o Dattime Running Light

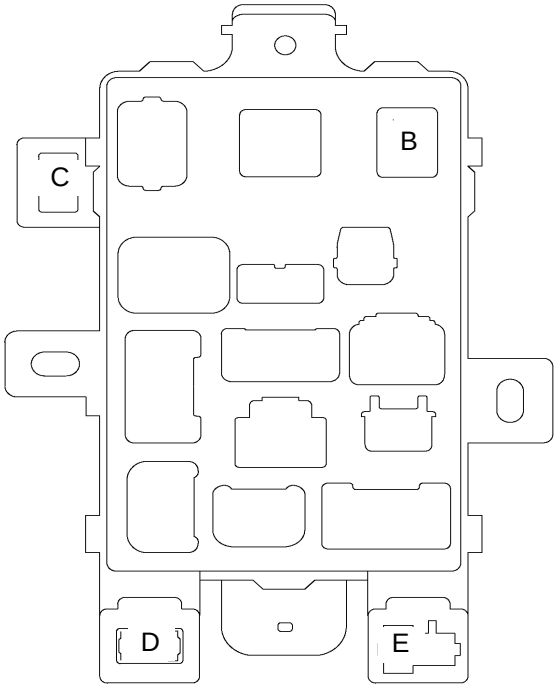

Relays:

A. Integration Relay
B. POWER Relay
C. ACC CUT Relay
D. Turn Signal Flasher
E. Back–up Relay*

*: A/T

Y

I24640

IGNITION SWITCH AND KEY UNLOCK WARNING SWITCH

BE02W–04

LOCATION

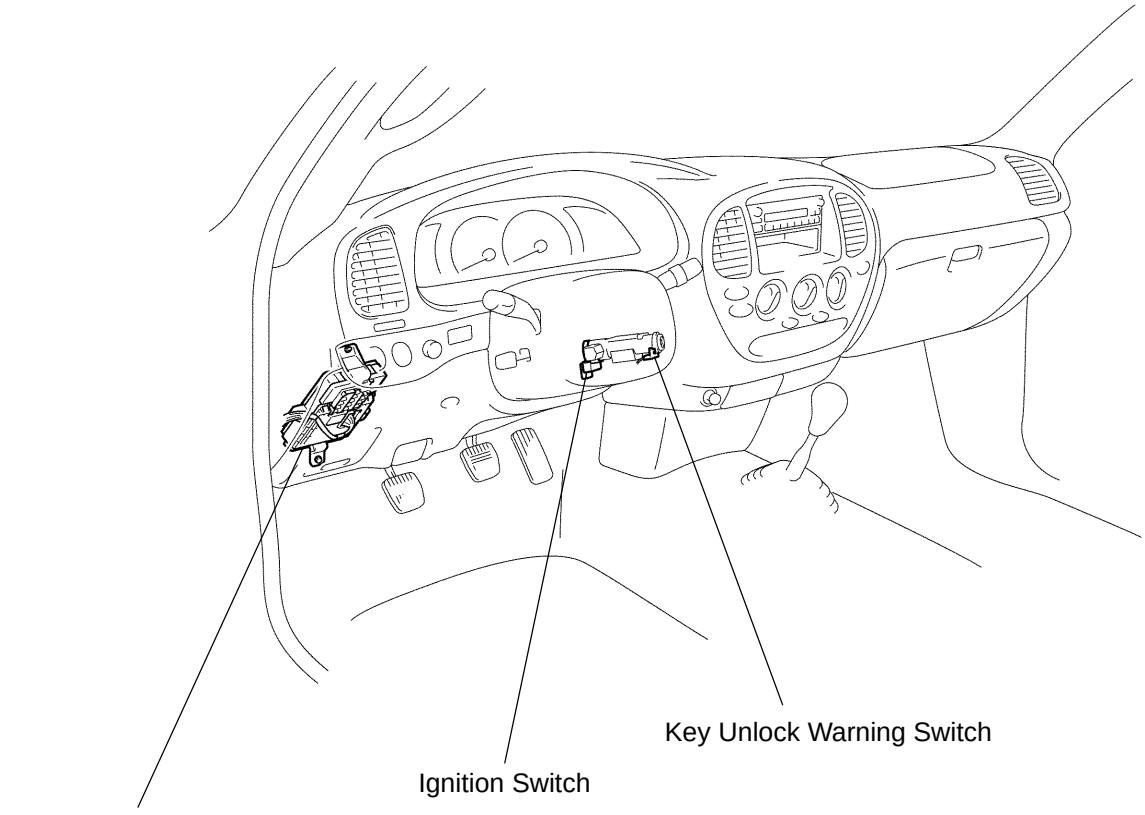

P

I24704

BE170–02

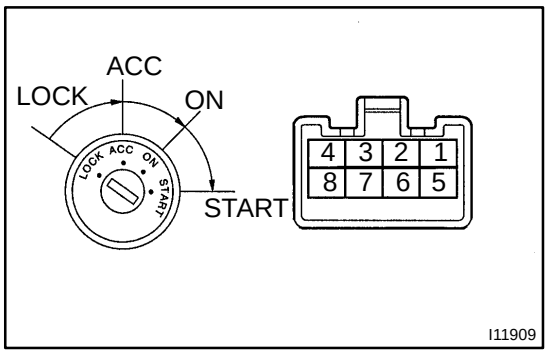

INSPECTION

1. INSPECT IGNITION SWITCH CONTINUITY

Switch position	Tester connection	Specified condition
LOCK	–	No continuity
ACC	2 – 3	Continuity
ON	2 – 3 – 4 6 – 7	Continuity
START	1 – 2 – 4 6 – 7 – 8	Continuity

If the continuity is not as specified, replace the switch.

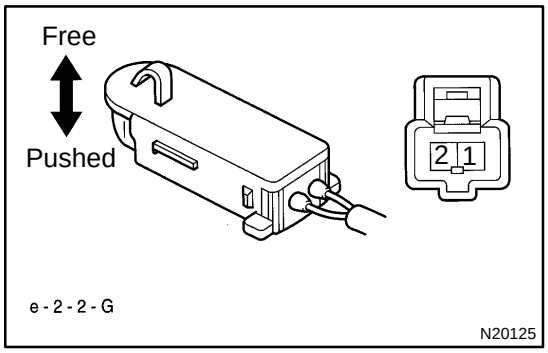

2. INSPECT KEY UNLOCK WARNING SWITCH CONTINUITY

Switch position	Tester connection	Specified condition
Switch free (Key removed)	1 – 2	No continuity
Switch pushed (Key inserted)	1 – 2	Continuity

If the continuity is not as specified, replace the switch.

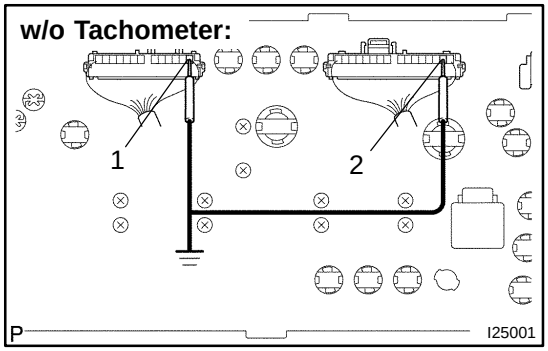

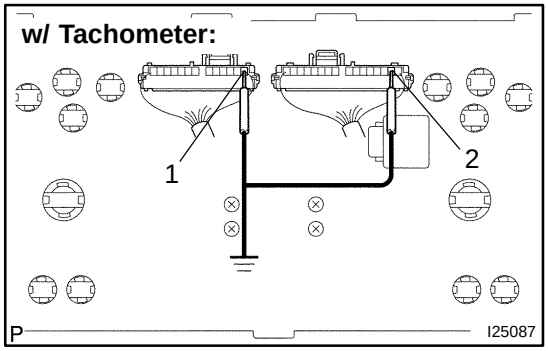

3. Key unlock warning system: INSPECT COMBINATION METER OPERATION

(a) Disconnect the connectors from the combination meter.
(b) Ground terminal 1 ad 2 on the wire harness side connector.
(c) Check the buzzer sounds.
(d) Disconnect the negative (–) lead from the body ground to terminal 1 or 2.
(e) Check that the buzzer stops sounding.

If the operation is not as specified, replace the combination meter.

4. INSPECT COMBINATION METER CIRCUIT

(See page BE–48)

HEADLIGHT AND TAILLIGHT SYSTEM

BE02Z–04

LOCATION

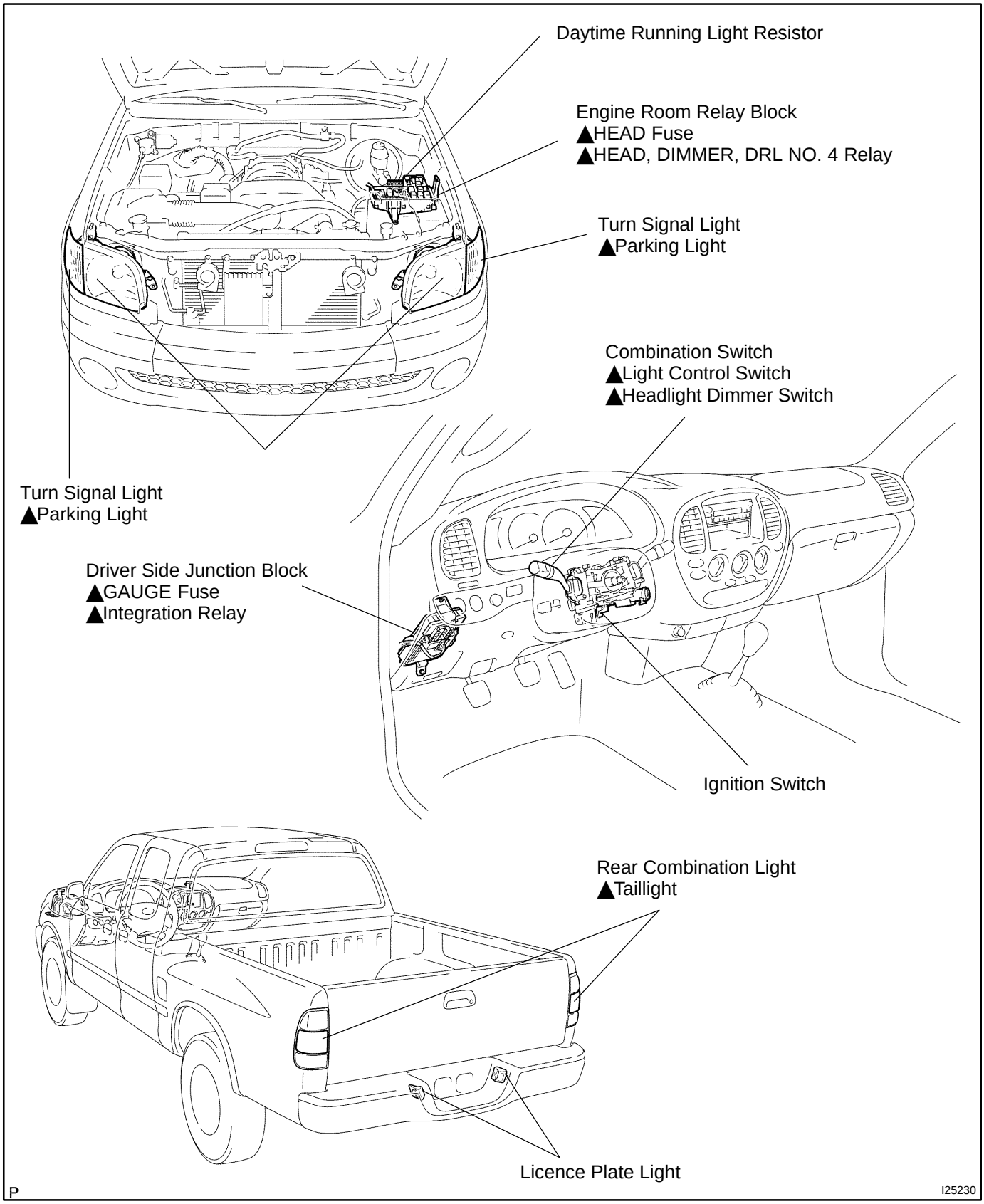

BE171–01

COMPONENTS

w/ Intermittent Wiper or Mist Wiper:

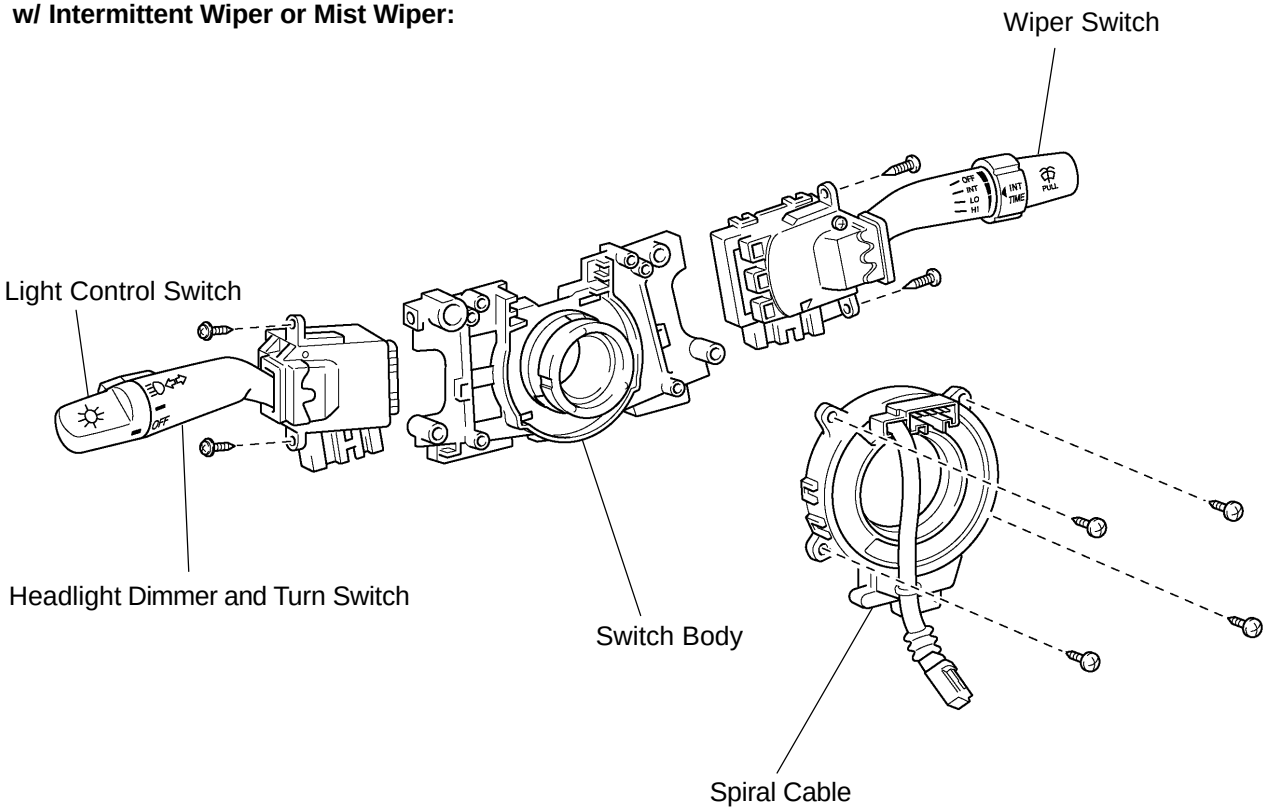

Y

I10557

BE2CE–01

INSPECTION

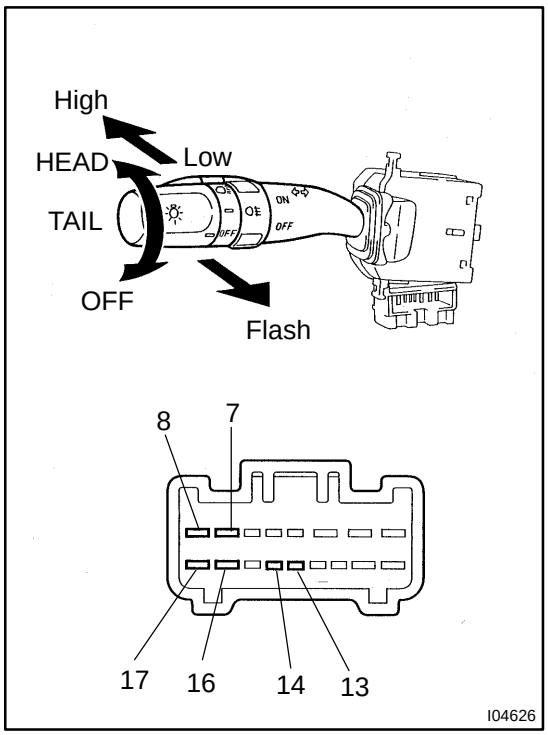

1. INSPECT LIGHT CONTROL SWITCH CONTINUITY

Switch position	Tester connection	Specified condition
OFF	–	No continuity
TAIL	14 – 16	Continuity
HEAD	13 – 14 – 16	Continuity

If the continuity is not as specified, replace the switch.

2. INSPECT HEADLIGHT DIMMER SWITCH CONTINUITY

Switch position	Tester connection	Specified condition
Flash	7 – 8 – 16	Continuity
Low beam	16 – 17	Continuity
High beam	7 – 16	Continuity

If the continuity is not as specified, replace the switch.

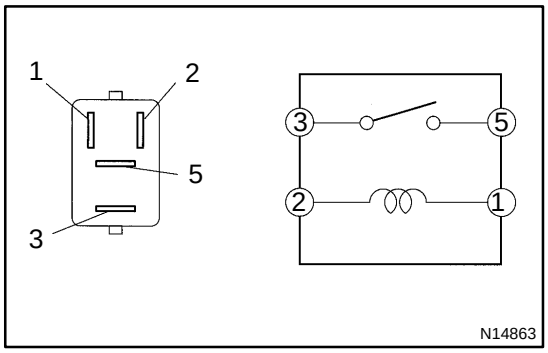

3. INSPECT HEADLIGHT RELAY (Marking: H–LP) CONTINUITY

Condition	Tester connection	Specified condition
Constant	1 – 2	Continuity
Apply B+ between terminals 1 and 2	3 – 5	Continuity

If the continuity is not as specified, replace the relay.

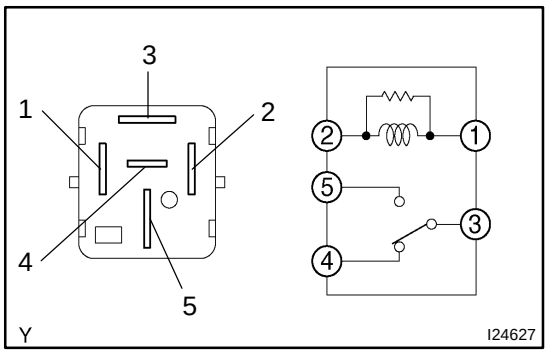

4. w/ Daytime running light: INSPECT DIMMER RELAY CONTINUITY

Condition	Tester connection	Specified condition
Constant	1 – 2, 3 – 4	Continuity
Apply B+ between terminals 1 and 2	3 – 5	Continuity

If the continuity is not as specified, replace the relay.

5. w/ Daytime running light:
CHECK INTEGRATION RELAY (DRIVER SIDE JUNCTION BLOCK) CIRCUIT

(a) Disconnect the 1I, 1J, 1K, 1M and 1N driver side junction block connectors, and check the voltage or continuity of each terminal of the wire harness side connectors.

Driver Side Junction Block:

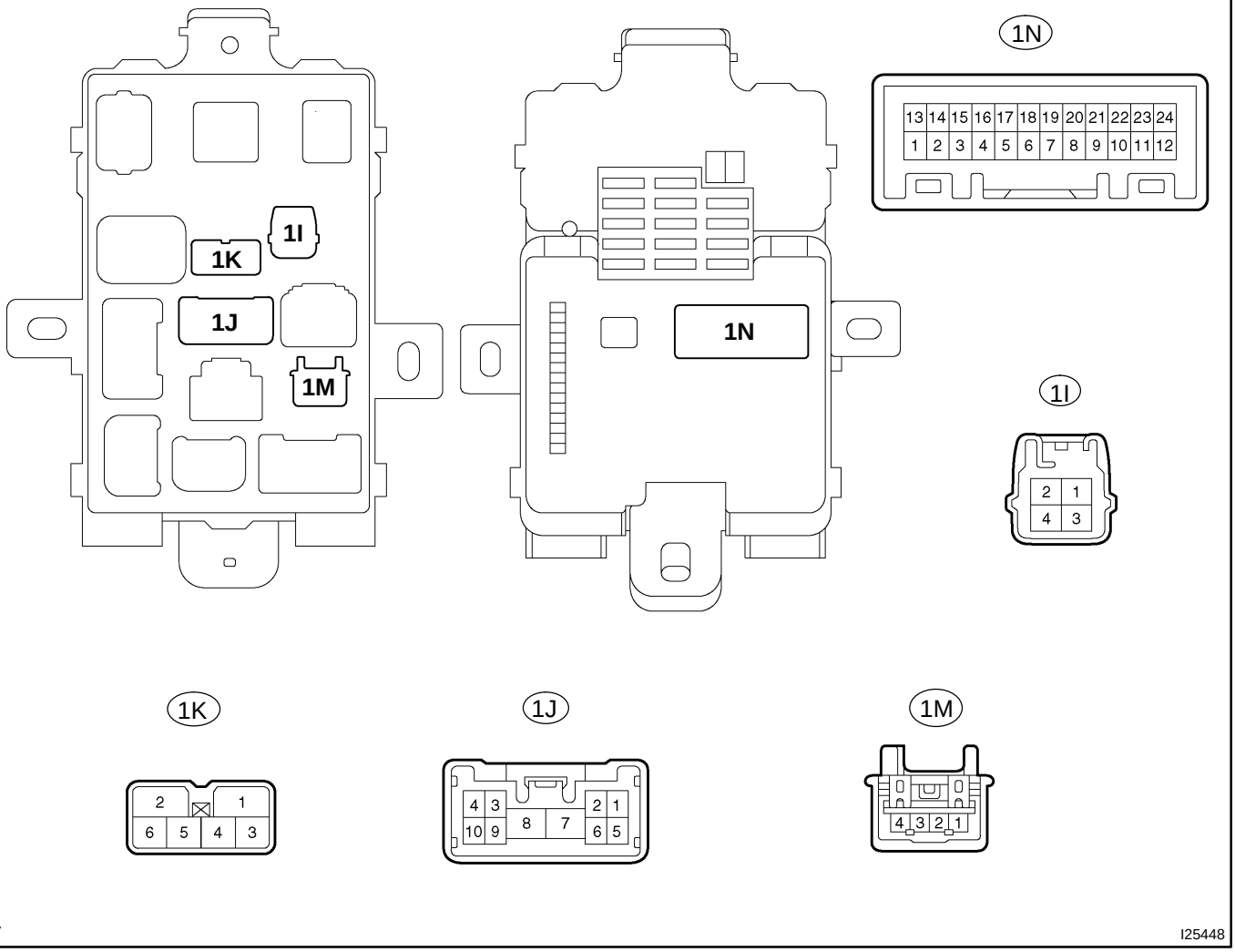

Tester connection	Condition	Specified condition
1I–2 – Body ground	Ignition switch LOCK or ACC	No voltage
1I–2 – Body ground	Ignition switch ON or START	Battery voltage
1J–8 – Body ground	Constant	Continuity
1K–2 – Body ground	Constant	Battery voltage
1K–5 – Body ground	Constant	Battery voltage
1M–5 – Body ground	Fog light ON	Battery voltage
1M–5 – Body ground	Fog light OFF	No voltage
1M–6 – Body ground	Constant	Continuity

Tester connection	Condition	Specified condition
1N–1 – Body ground	Parking lever release	No continuity
1N–1 – Body ground	Parking lever pull up	Continuity
1N–2 – Body ground	Engine Stop	No voltage
1N–2 – Body ground	Engine Running	Battery voltage
1N–3 – Body ground	Light control switch OFF or TAIL	No continuity
1N–3 – Body ground	Light control switch HEAD	Continuity
1N–4 – Body ground	Light control switch OFF or TAIL	No continuity
1N–4 – Body ground	Light control switch HEAD	Continuity
1N–7 – Body ground	Headlight dimmer switch low beam	No continuity
1N–7 – Body ground	Headlight dimmer switch high beam or flash	Continuity
1N–8 – Body ground	Headlight dimmer switch low or high beam	No continuity
1N–8 – Body ground	Headlight dimmer switch flash	Continuity
1N–13 – Body ground	Brake fluid level warning light OFF	No continuity
1N–13 – Body ground	Brake fluid level warning light ON	Continuity
1N–24 – Body ground	Constant	Continuity

If the result is not as specified, there may be a malfunction on the wire harness side.

(b) Reconnect the 1I, 1J, 1K, 1M and 1N junction block connectors, and check the voltage of each terminal of the connectors.

Tester connection	Condition	Specified condition
1M–3 – Body ground	Light control switch TAIL or HEAD	Battery voltage
1M–3 – Body ground	Light control switch OFF	No voltage
1N–15 – Body ground	Light control switch TAIL or HEAD	Battery voltage
1N–15 – Body ground	Light control switch OFF	No voltage

If the result is not as specified, the integration relay (junction block) may malfunction.

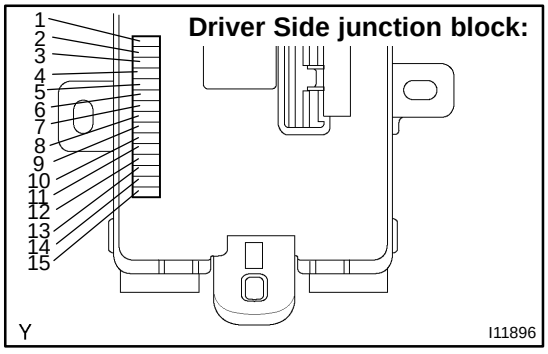

(c) Remove the integration relay from the driver side junction block, and check the voltage or continuity of each terminal on the junction block side. (See page BE–71)

6. w/o Daytime running light:
CHECK INTEGRATION RELAY (DRIVER SIDE JUNCTION BLOCK) CIRCUIT

Disconnect the 1L driver side junction block connector, and check the voltage or continuity of each terminal of the wire harness side connector.

Driver Side Junction Block:

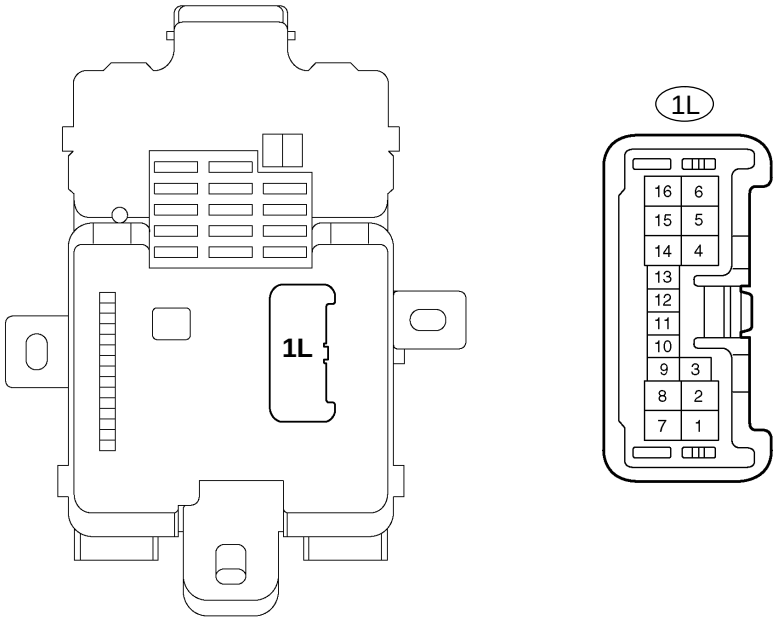

Tester connection	Condition	Specified condition
1L–5 – Body ground	Light control switch OFF	No continuity
1L–5 – Body ground	Light control switch TAIL or HEAD	Continuity
1L–6 – Body ground	Constant	Battery voltage
1L–13 – Body ground	Light control switch OFF	No continuity
1L–13 – Body ground	Light control switch TAIL or HEAD	Continuity

If the result is as specified, there may be a malfunction on the wire harness side.

If the result is not as specified, the integration relay (junction block) may malfunction

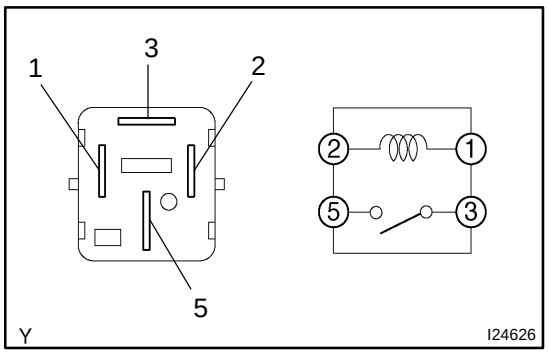

7. INSPECT DAYTIME RUNNING LIGHT NO.4 RELAY (Marking: DRL NO.4) CONTINUITY

Condition	Tester connection	Specified condition
Constant	1 – 2	Continuity
Apply B+ between terminals 1 and 2	3 – 5	Continuity

If the continuity is not as specified, replace the relay.

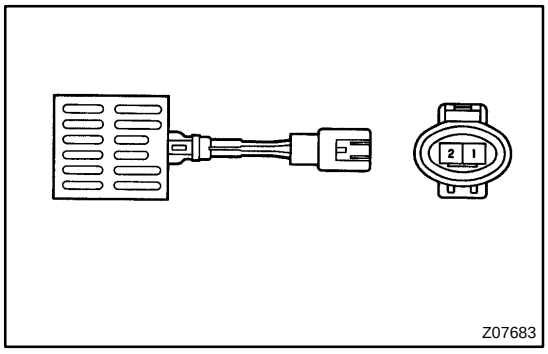

8. INSPECT DAYTIME RUNNING LIGHT RESISTOR CONTINUITY

Condition	Tester connection	Specified condition
Constant	1 – 2	Approx. 337 m Ω

If the continuity is not as specified, replace the resistor.

BE173–03

ADJUSTMENT

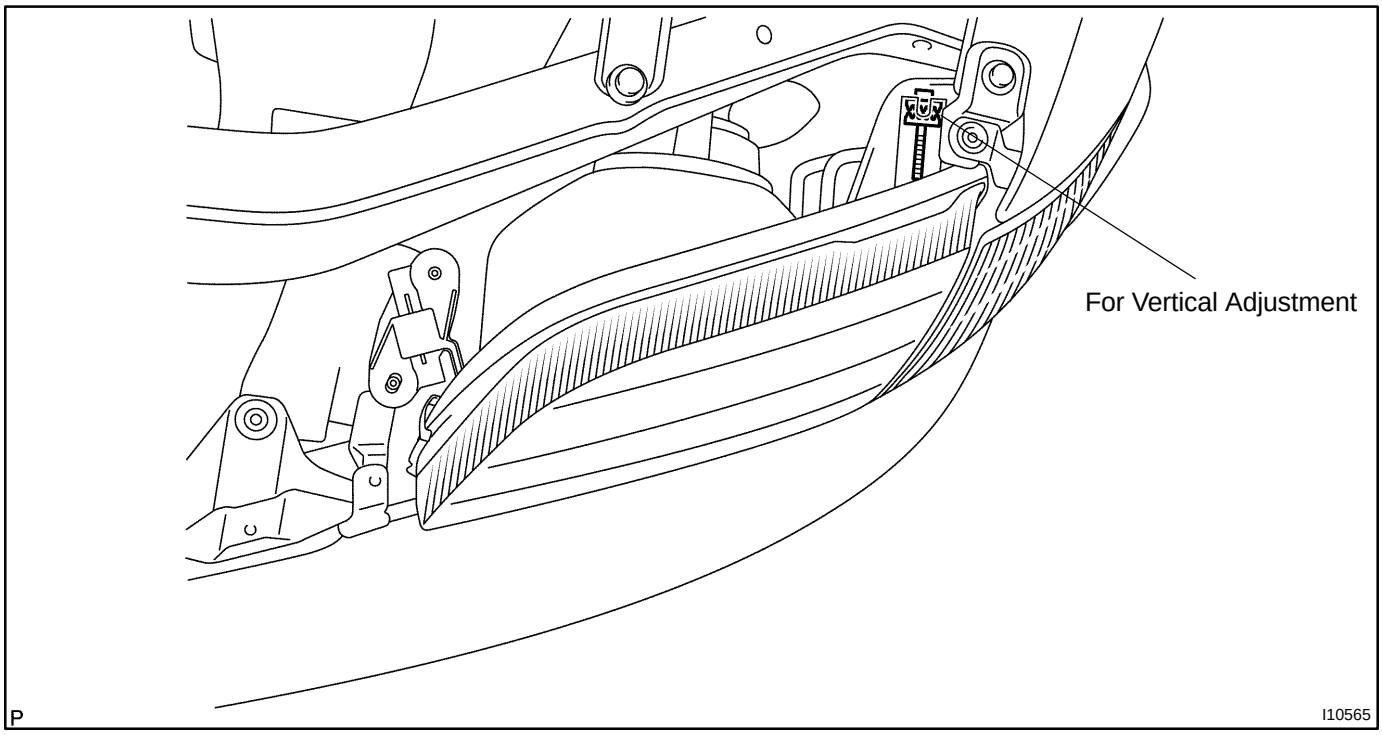

ADJUST HEADLIGHT AIM ONLY

(a) Place the vehicle in the following conditions.
- ▲ The area where the headlight is not deformed.
- ▲ The vehicle is parked on a level surface.
- ▲ The tire inflation pressure is at the specified value.
- ▲ A driver is in the driver side seat and the vehicle is ready for driving (with the tank full).
- ▲ The vehicle has been bounced several times.

(b) Check the headlight aiming.
- (1) Prepare a thick white paper.
- (2) Put the paper perpendicularly on the ground at the position 3 m (9.84 ft) away from the headlights.
- (3) MAKE sure that the center line of the vehicle and the paper face forms a 90–degree angle as shown in the illustration.
- (4) Draw a horizontal line (H line) on the paper, showing where the headlights should strike.
- (5) Draw a vertical line (V line) to where the center line of the vehicle is to be.
- (6) Draw 2 vertical lines to where the headlights should strike (V RH and V LH lines).
- (7) Draw a horizontal line (by connecting both low beam center marks) to where the headlights should strike (H RH and H LH lines).

HINT:
The H RH and H LH lines are 0.4° below the horizontal line (H line) of the light axis.
- (8) Start the engine.
- (9) Turn the headlights ON.
- (10) Check that the headlights properly strike the position as shown in the illustration.
- (11) If not, adjust the headlights aim in the vertical direction.

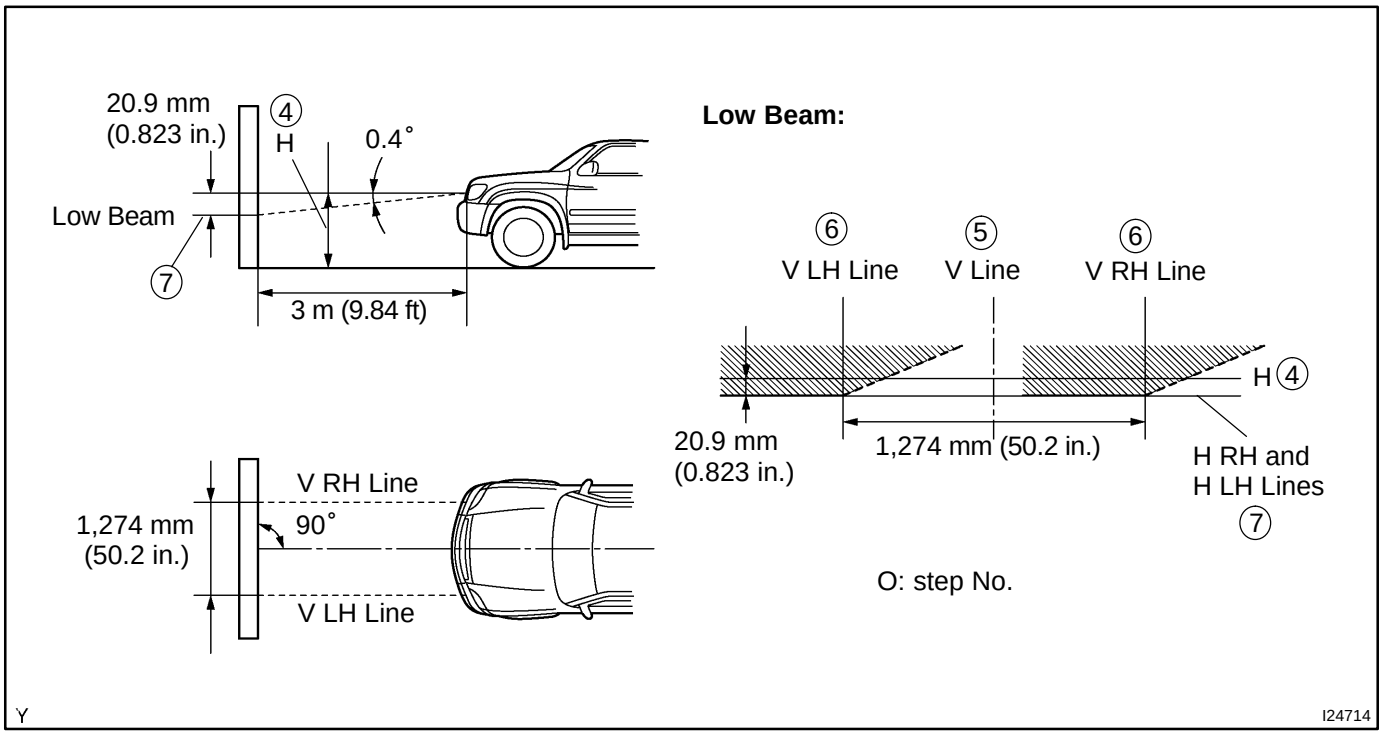

HINT:
As shown in the illustration, adjust each aim of the RH and LH headlights.

(c) When adjusting the headlight aim in the vertical direction:
Using the adjusting bolt, adjust the headlight aim within the specified range.

FOG LIGHT SYSTEM

LOCATION

BE0H2–15

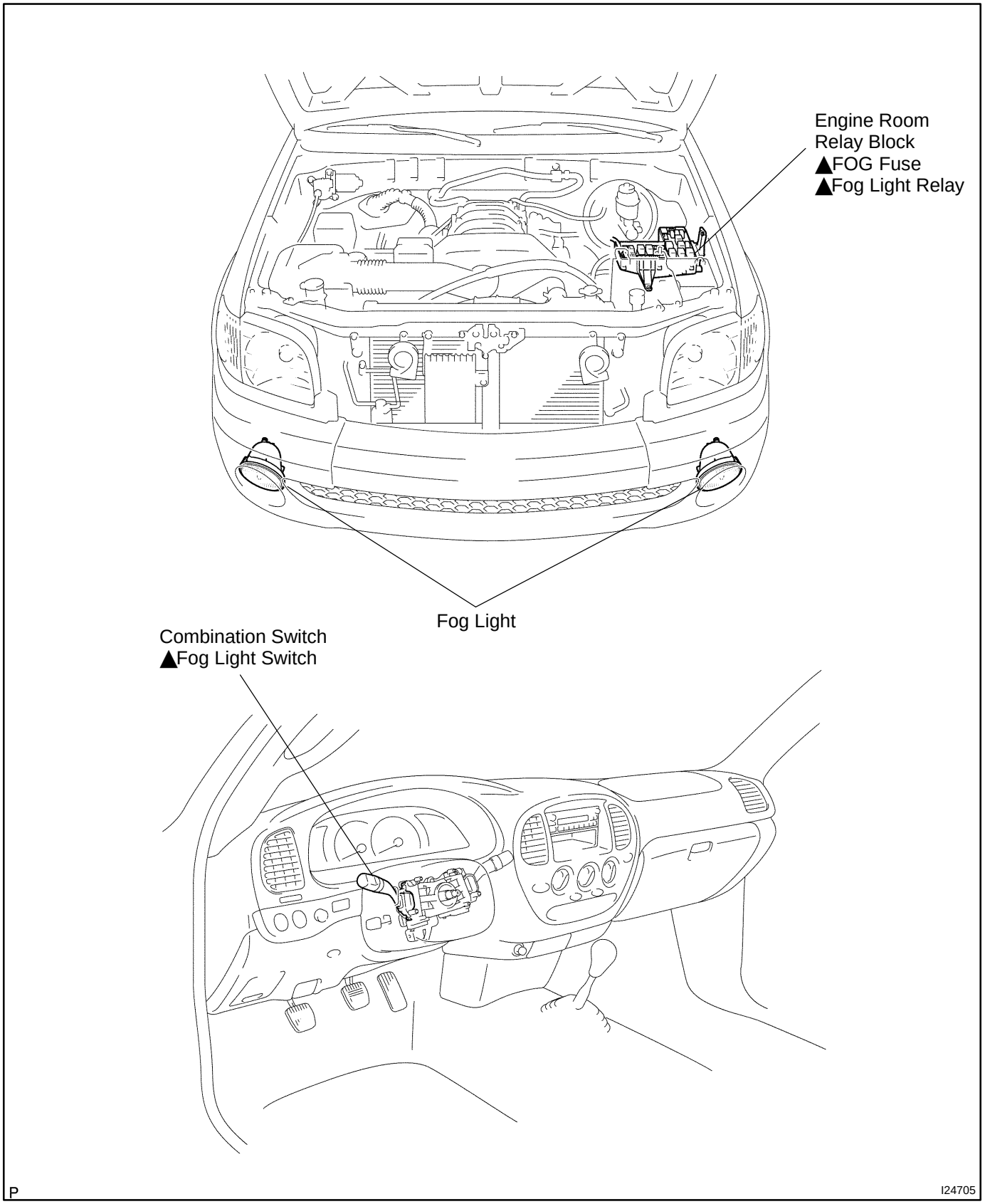

BE174–02

INSPECTION

1. INSPECT FOG LIGHT SWITCH CONTINUITY

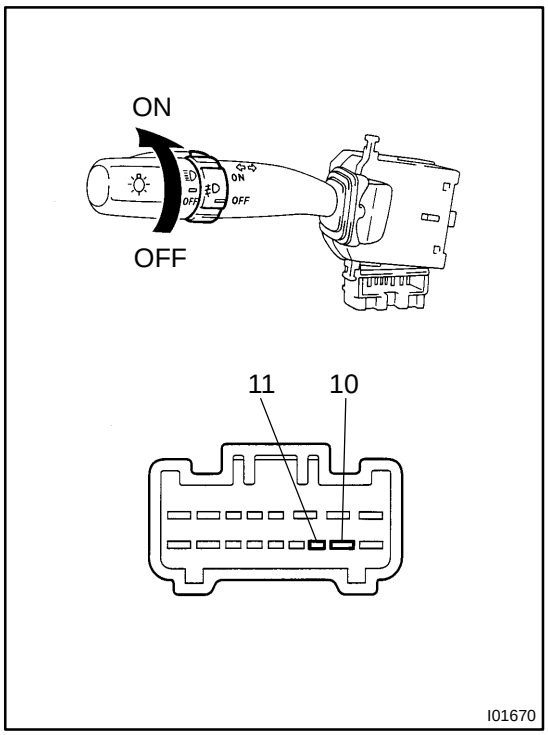

Switch position	Tester connection	Specified condition
OFF	–	No continuity
ON	10 – 11	Continuity

If the continuity is not as specified, replace the switch.

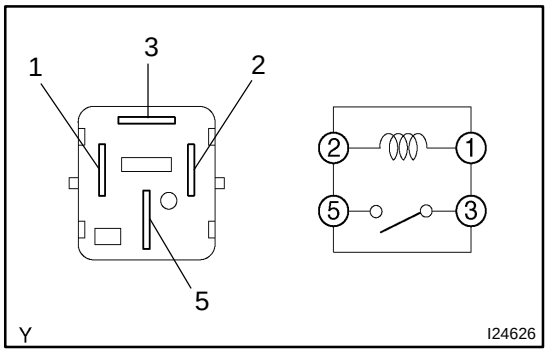

2. INSPECT FOG LIGHT RELAY (Marking: FOG) CONTINUITY

Condition	Tester connection	Specified condition
Constant	1 – 2	Continuity
Apply B+ between terminals 1 and 2	3 – 5	Continuity

If the continuity is not as specified, replace the relay.

BE2CF–01

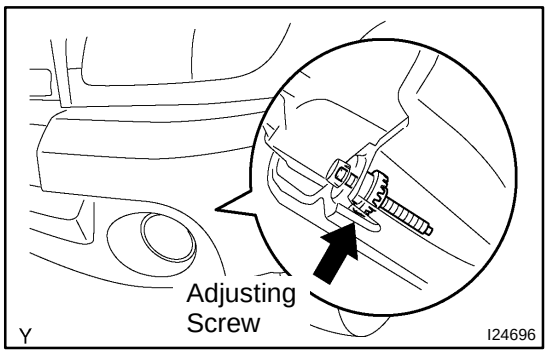

ADJUSTMENT

ADJUST FOG LIGHT AIM

Adjusting screw: Vertical direction

TURN SIGNAL AND HAZARD WARNING SYSTEM

BE033–06

LOCATION

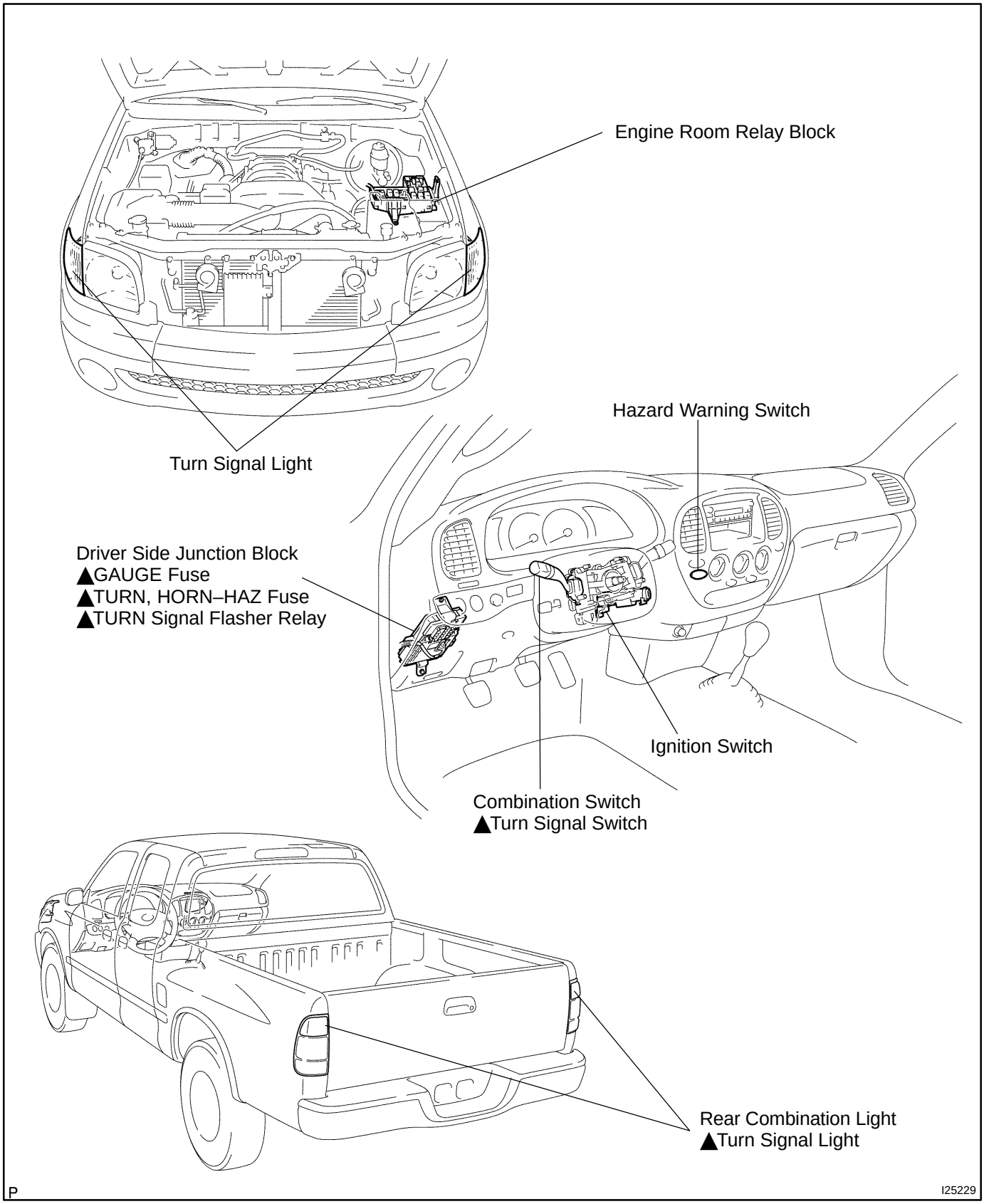

BE034–14

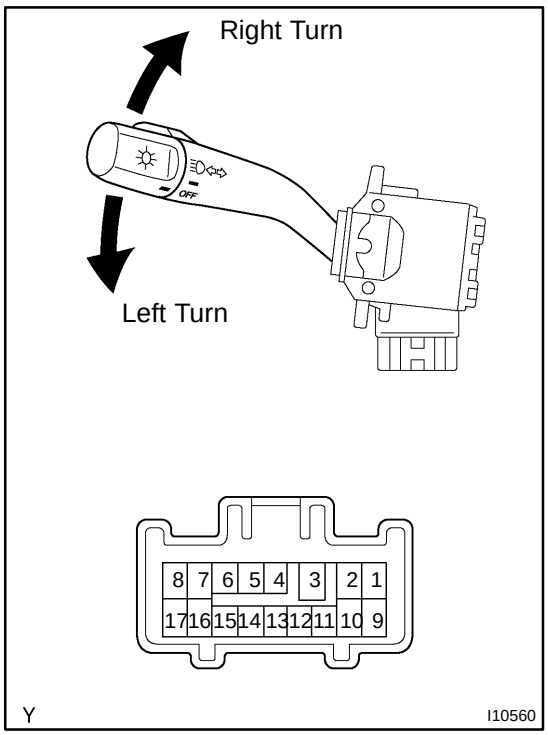

INSPECTION

1. INSPECT TURN SIGNAL SWITCH CONTINUITY

Switch position	Tester connection	Specified condition
Left turn	1 – 2	Continuity
Original	–	No continuity
Right turn	2 – 3	Continuity

If the continuity is not as specified, replace the switch.

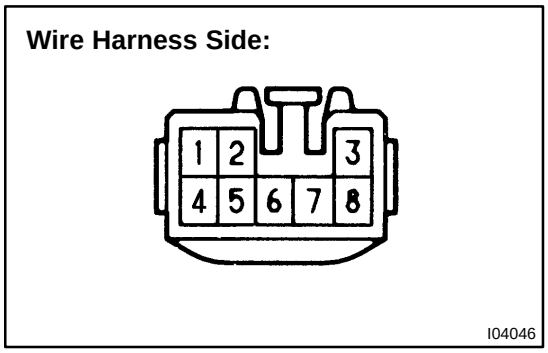

2. INSPECT TURN SIGNAL FLASHER OPERATION

Disconnect the connector from the turn signal flasher and inspect the connector on the wire harness side,as shown.

Tester connection	Condition	Specified condition
1 – Ground	Ignition switch LOCK or ACC	No voltage
1 – Ground	Ignition switch ON	Battery positive voltage
2 – Ground	Constant	Continuity
3 – Ground	Constant	Continuity
4 – Ground	Constant	Battery positive voltage
5 – Ground	Turn signal switch RIGHT or OFF	No Continuity
5 – Ground	Turn signal switch LEFT	Continuity
6 – Ground	Turn signal switch LEFT or OFF	No Continuity
6 – Ground	Turn signal switch RIGHT	Continuity
7 – Ground	Constant	Continuity
8 – Ground	Hazard warning switch OFF	No Continuity
8 – Ground	Hazard warning switch ON	Continuity

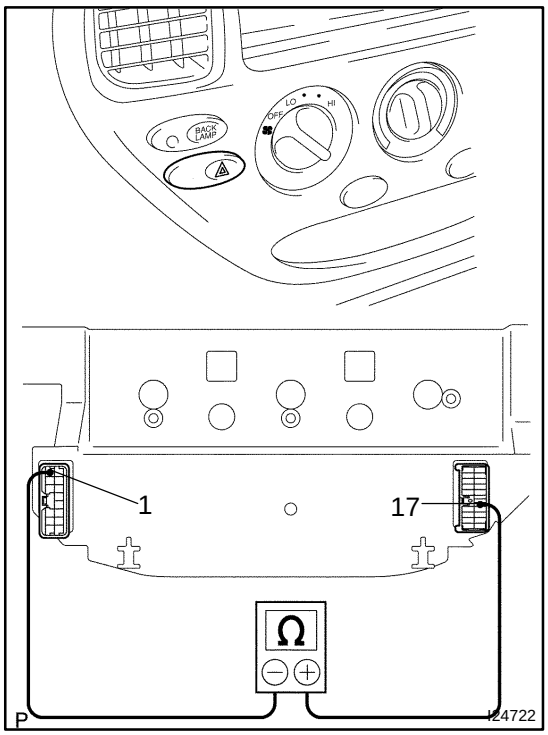

3. INSPECT HAZARD WARNING SWITCH CONTINUITY

(a) Remove the center cluster finish panel.

(b) Disconnect the connector from the center cluster integration.

(c) Check that continuity exists between terminal 17 and terminal 1 with the switch ON.

(d) Check that no continuity exists between terminal 17 and terminal 1 with the switch OFF.

If the continuity is not as specified, replace the switch.

INTERIOR LIGHT SYSTEM

LOCATION

BE175–03

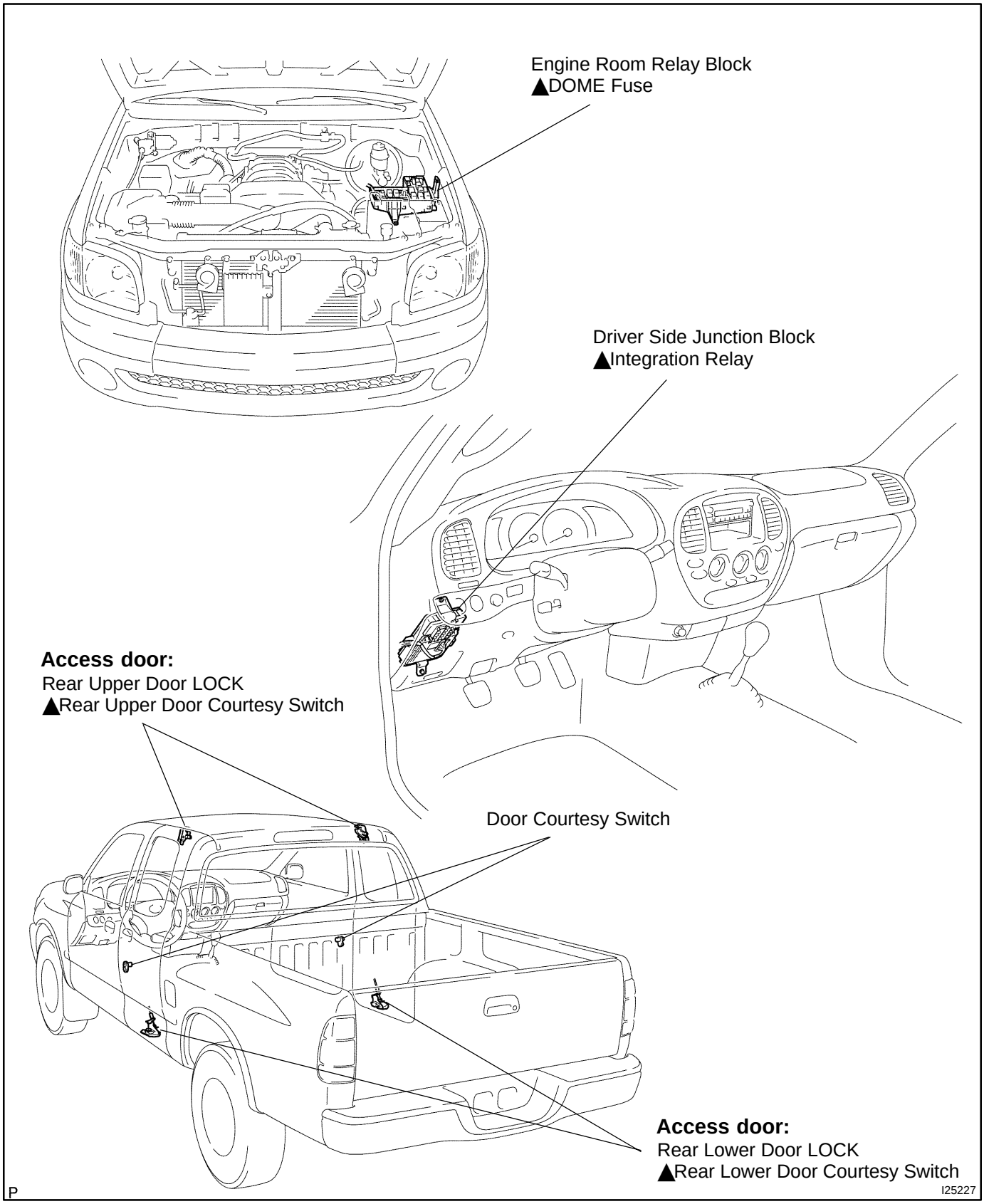

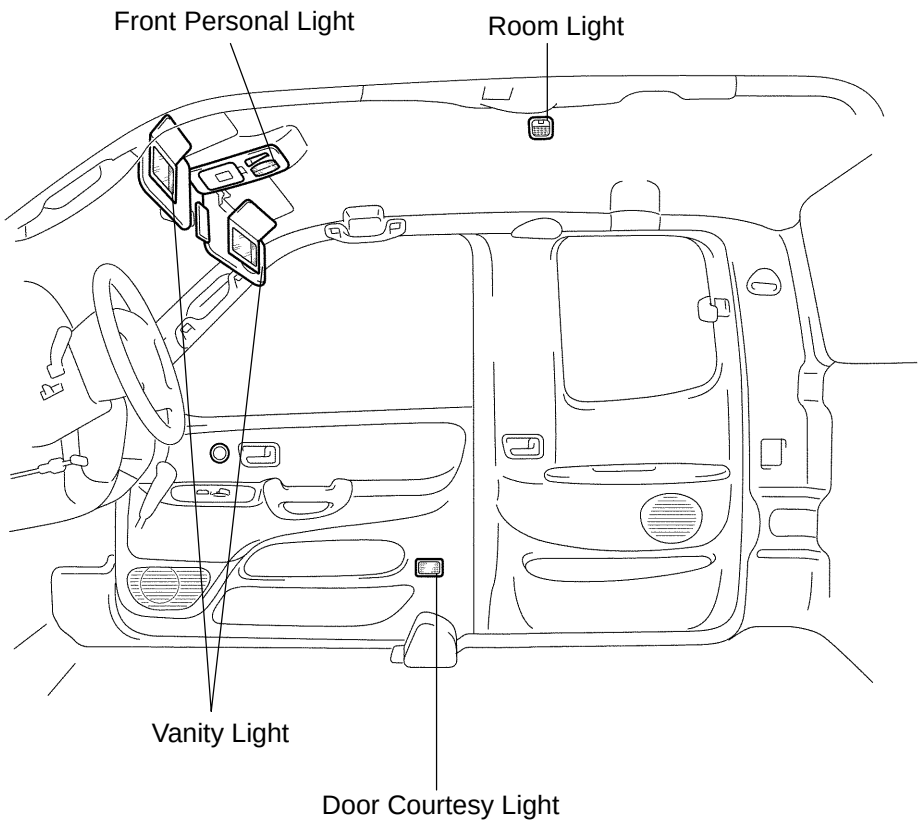
Front Personal Light
Room Light
Vanity Light
Door Courtesy Light

I10550

BE2C9–01

INSPECTION

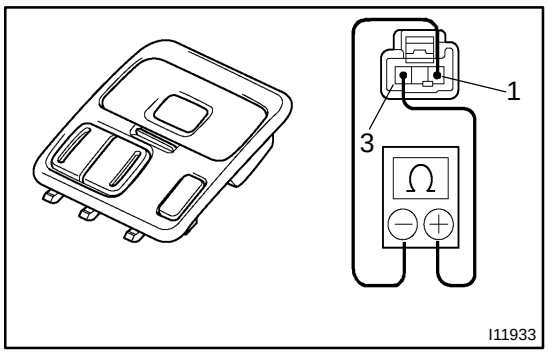

1. INSPECT FRONT PERSONAL LIGHT SWITCH CONTINUITY

(a) Disconnect the connector from the personal light.

(b) Push the personal light switch ON,check that continuity exists between terminal 3 and body terminal 1.

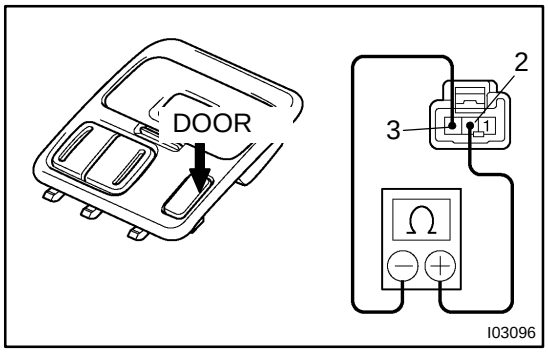

(c) Turn the light switch to DOOR ,check that continuity exists between terminal 2 and 3.

If the operation is as specified,replace the switch.

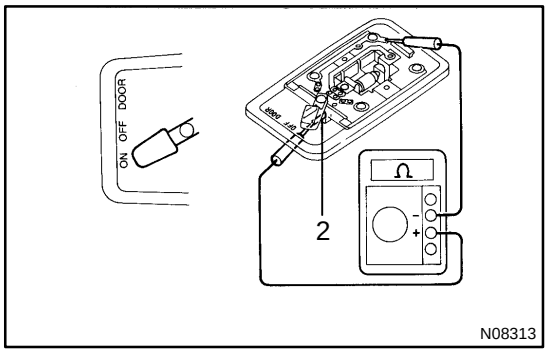

2. INSPECT ROOM LIGHT SWITCH

(a) Disconnect the connector from the interior light assembly.

(b) Turn the interior light switch ON, check that continuity exists terminal 2 and body ground.

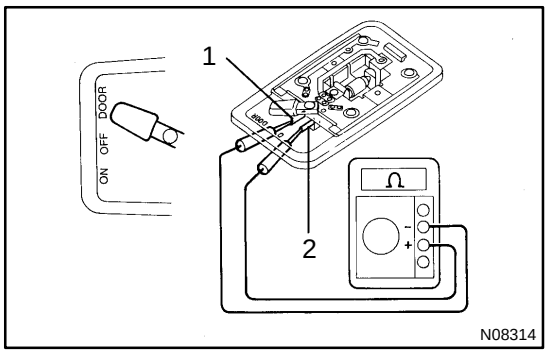

(c) Turn the interior light switch to DOOR, check that continuity exists between terminals 1 and 2.

If the operation is not as specified, replace the switch.

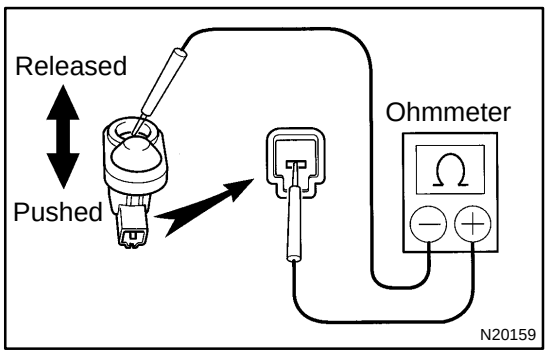

3. INSPECT (FRONT) DOOR COURTESY SWITCH CONTINUITY

(a) Check that continuity exists between terminals and the switch body with the switch ON (switch pin released: opened door).

(b) Check that no continuity exists between terminals and the switch body with the switch OFF (switch pin pushed in: closed door).

If the operation is not as specified, replace the switch.

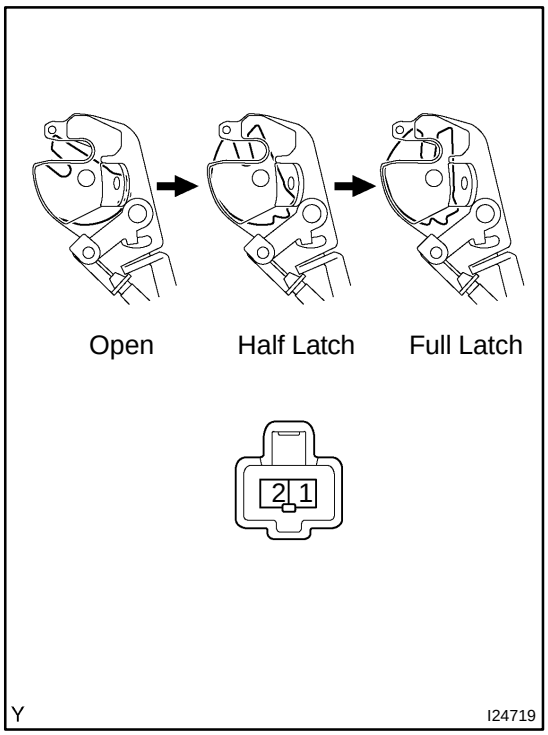

4. Access door:
INSPECT REAR UPPER DOOR COURTESY SWITCH CONTINUITY

Switch position	Tester connection	Specified condition
ON (Open)	1 – 2	Continuity
ON (Half latch)	1 – 2	Continuity
OFF (Full latch)	1 – 2	No continuity

If the continuity is not as specified, replace the upper door lock.

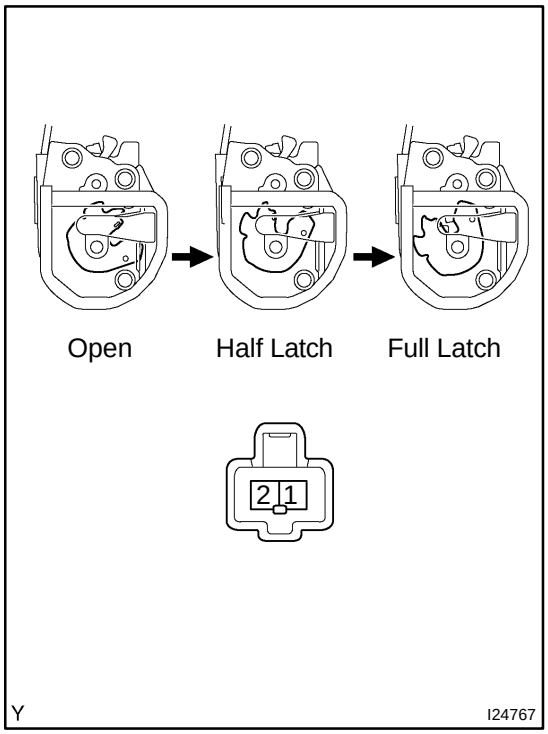

5. Access door:
INSPECT REAR LOWER DOOR COURTESY SWITCH CONTINUITY

Switch position	Tester connection	Specified condition
ON (Open)	1 – 2	Continuity
ON (Half latch)	1 – 2	Continuity
OFF (Full latch)	1 – 2	No continuity

If the continuity is not as specified, replace the lower door lock.

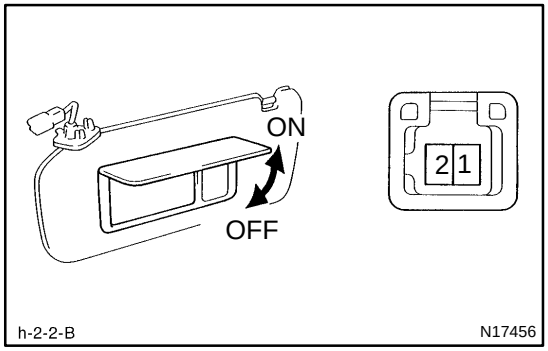

6. INSPECT VANITY LIGHT CONTINUITY

Switch position	Tester connection	Specified condition
OFF (Closed)	–	No continuity
ON (Opened)	1 – 2	Continuity

If the continuity is not as specified,replace the bulb or vanity light.

BACK–UP LIGHT SYSTEM

LOCATION

BE037–05

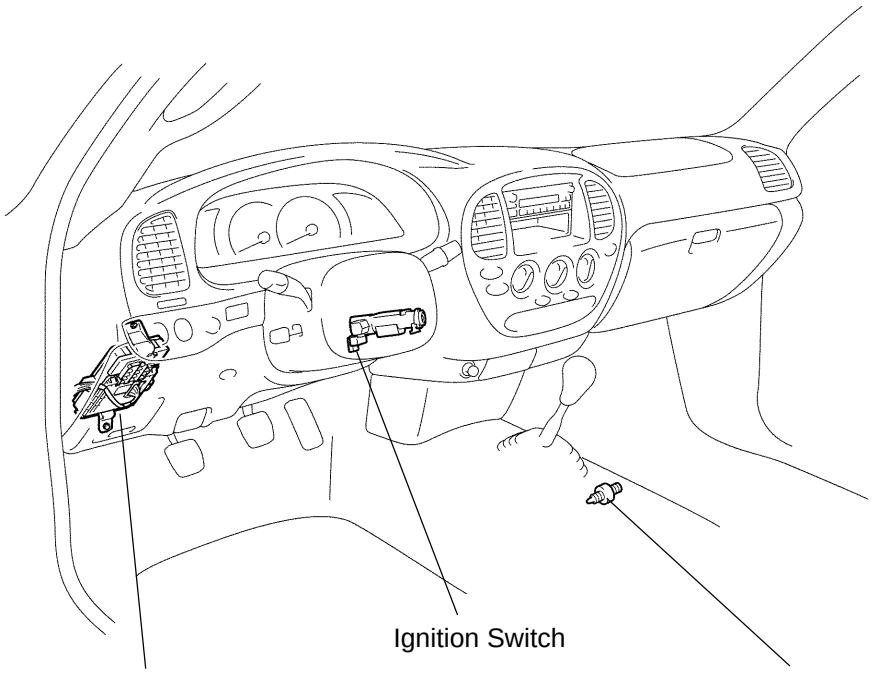

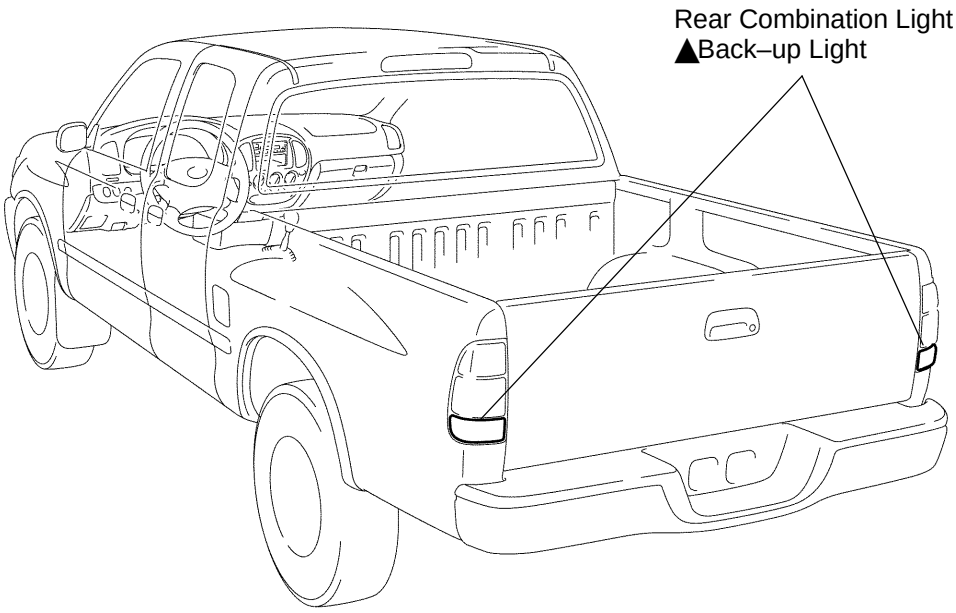

P

I25228

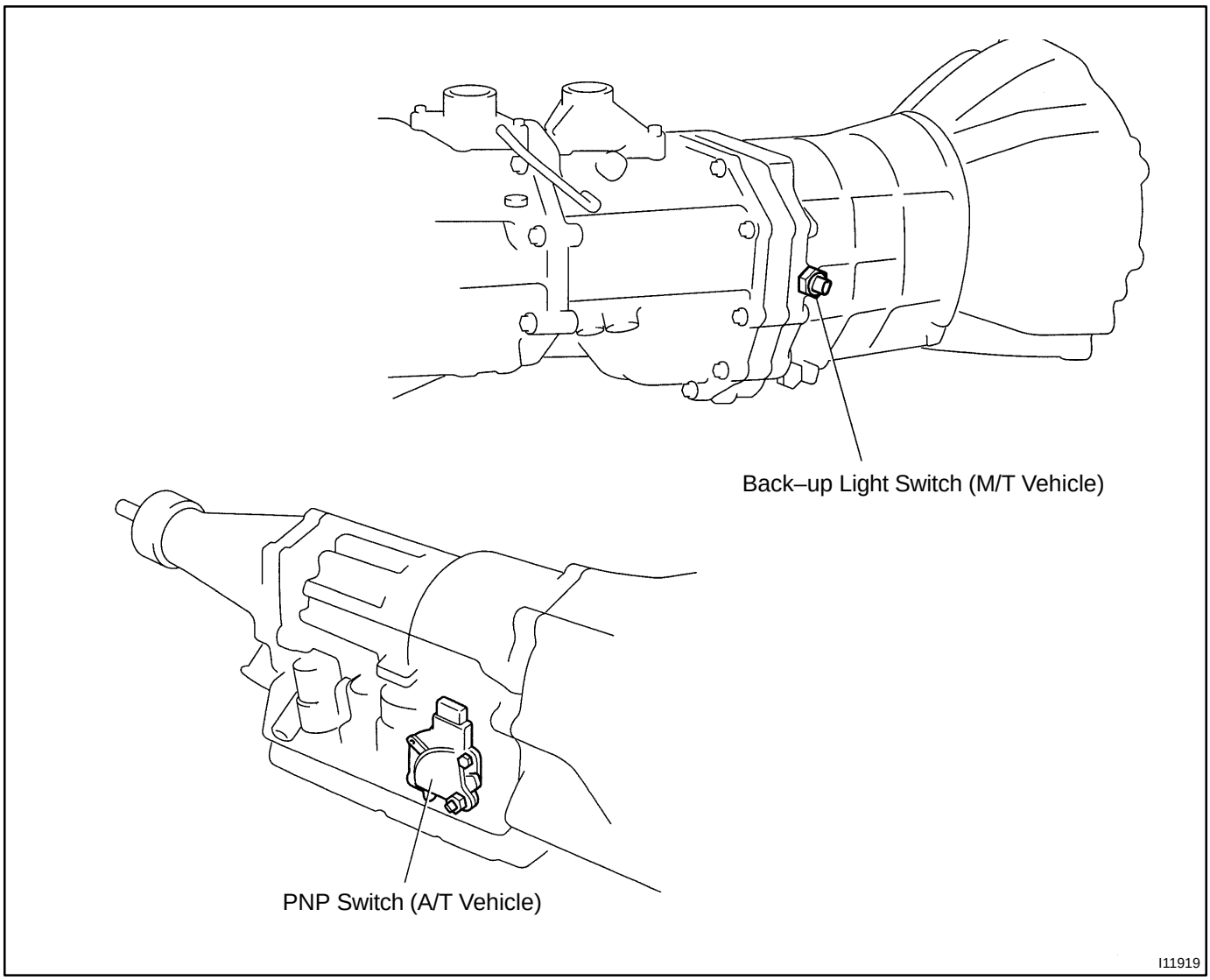
Back–up Light Switch (M/T Vehicle)
PNP Switch (A/T Vehicle)
I11919

BE038–06

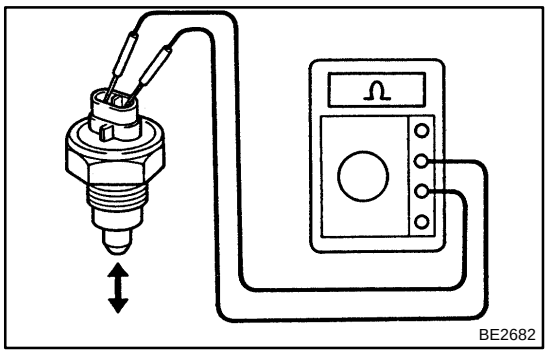

INSPECTION

1. M/T:

INSPECT BACK–UP LIGHT SWITCH CONTINUITY

Condition	Tester connection	Specified condition
Free	–	No continuity
Push	1 – 2	Continuity

If the continuity is not as specified, replace the switch.

2. A/T:

INSPECT PARK/NEUTRAL START SWITCH CONTINUITY (See page DI–408)

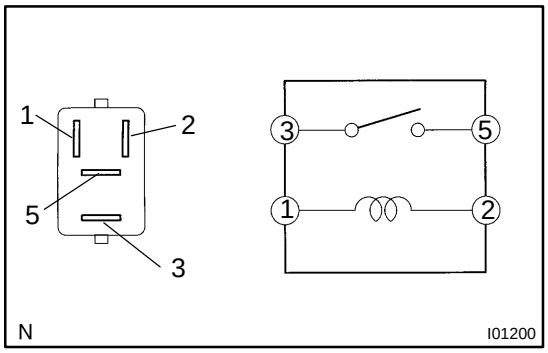

3. A/T:

INSPECT BACK–UP LIGHT RELAY CONTINUITY

Condition	Tester connection	Specified condition
Constant	1 – 2	Continuity
Apply B+ between terminals 1 and 2.	3 – 5	Continuity

If the continuity is not as specified, replace the relay.

STOP LIGHT SYSTEM

LOCATION

BE039–05

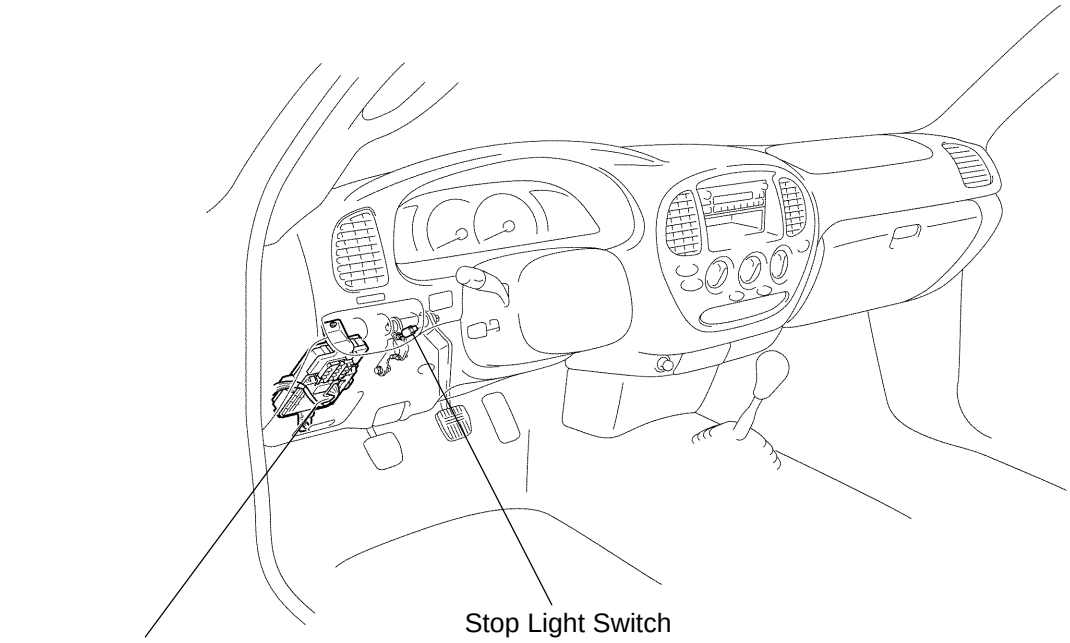

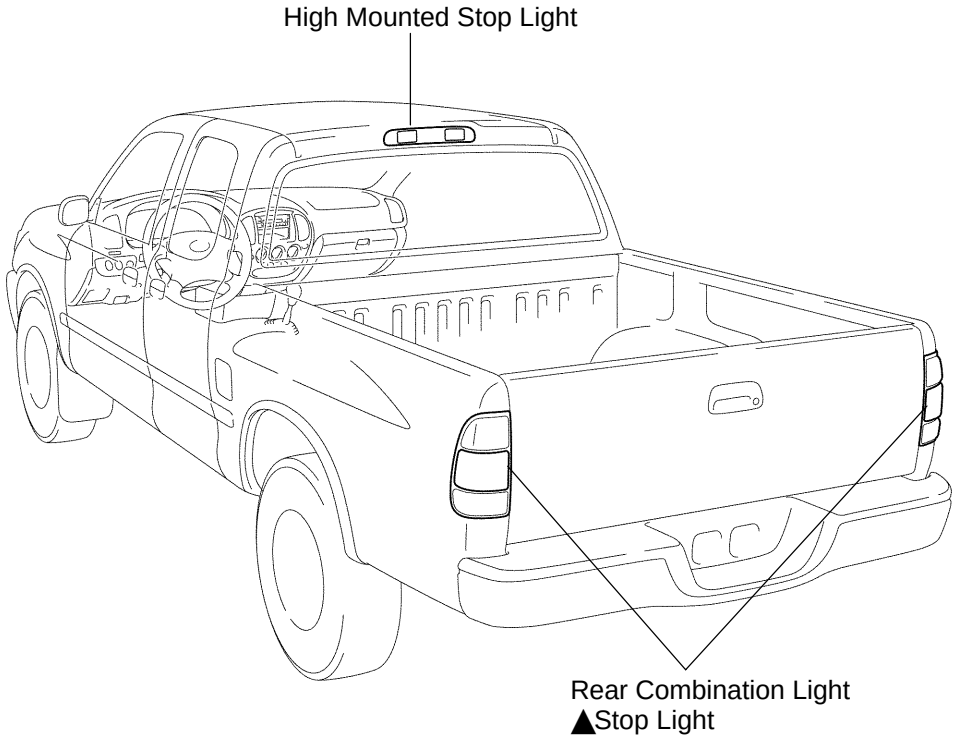

P

I25445

BE03A–05

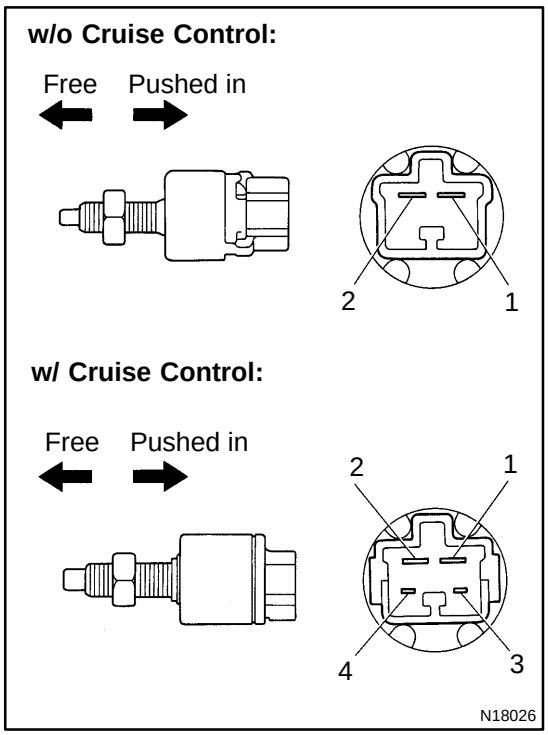

INSPECTION

1. w/o Cruise Control:
INSPECT STOP LIGHT SWITCH CONTINUITY

Switch position	Tester connection	Specified condition
Switch pin free	1 – 2	Continuity
Switch pin pushed in	1 – 2	No continuity

If the continuity is not as specified, replace the switch.

2. w/ Cruise Control:
INSPECT STOP LIGHT SWITCH CONTINUITY

Switch position	Tester connection	Specified condition
Switch pin free	1 – 2	Continuity
Switch pin pushed in	1 – 2	No continuity
Switch pin free	3 – 4	No continuity
Switch pin pushed in	3 – 4	Continuity

If the continuity is not as specified, replace the switch.

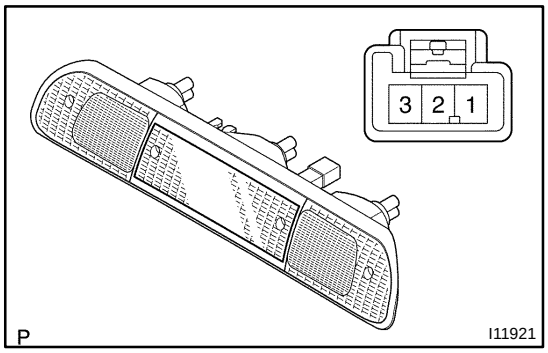

3. INSPECT HI–MOUNTED STOP LIGHT ASSEMBLY CONTINUITY

Using the ohmmeter,check that continuity exists between terminal 1 and terminal 2.

If the continuity is not as specified, replace the light assembly or bulb.

BE177–03

CARGO LIGHT SYSTEM

LOCATION

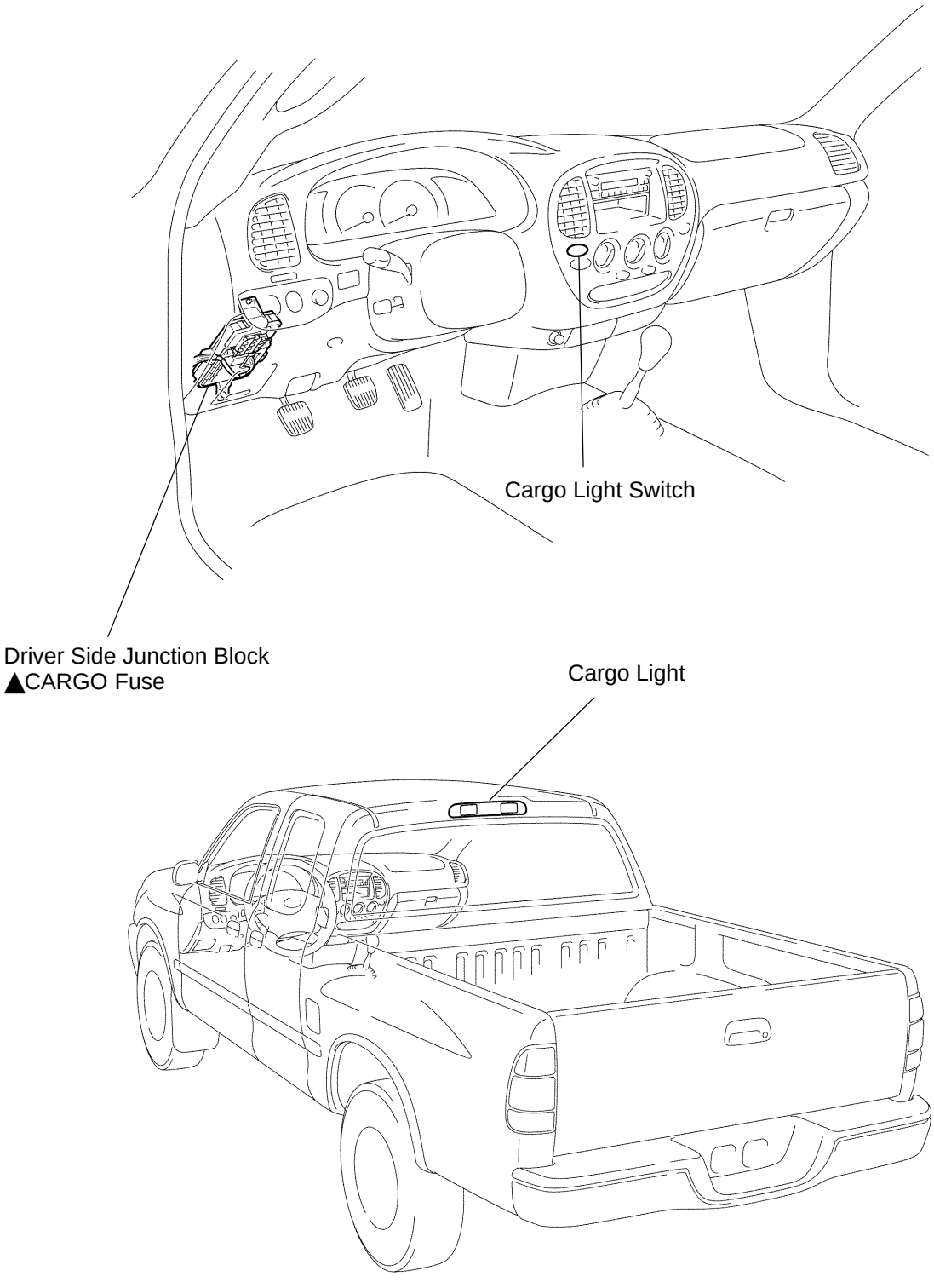

P

I11910

BE178–02

INSPECTION

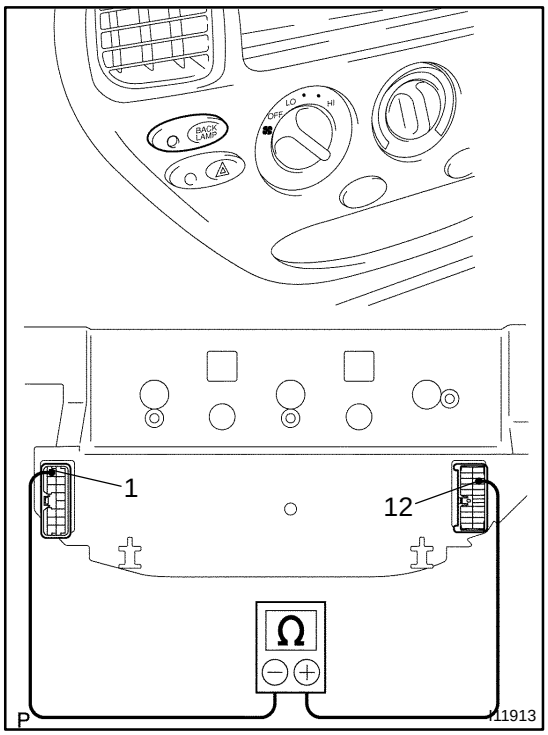

1. INSPECT CARGO LIGHT SWITCH CONTINUITY

(a) Remove the integration control panel..

(b) Disconnect the connector from the center cluster integration.

(c) Check the continuity exists between terminal 12 and terminal1,with the switch ON.

(d) Check that no continuity exists between terminal 12 and terminal 1,with the switch OFF.

If the continuity is not as specified, replace the switch.

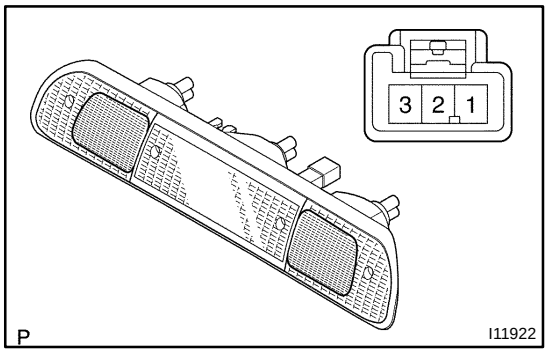

2. INSPECT CARGO LIGHT ASSEMBLY CONTINUITY

Using the ohmmeter,check that continuity exists between terminal 3 and terminal 2.

If the continuity is not as specified,replace the light assembly or bulb.

WIPER AND WASHER SYSTEM

BE03B–06

LOCATION

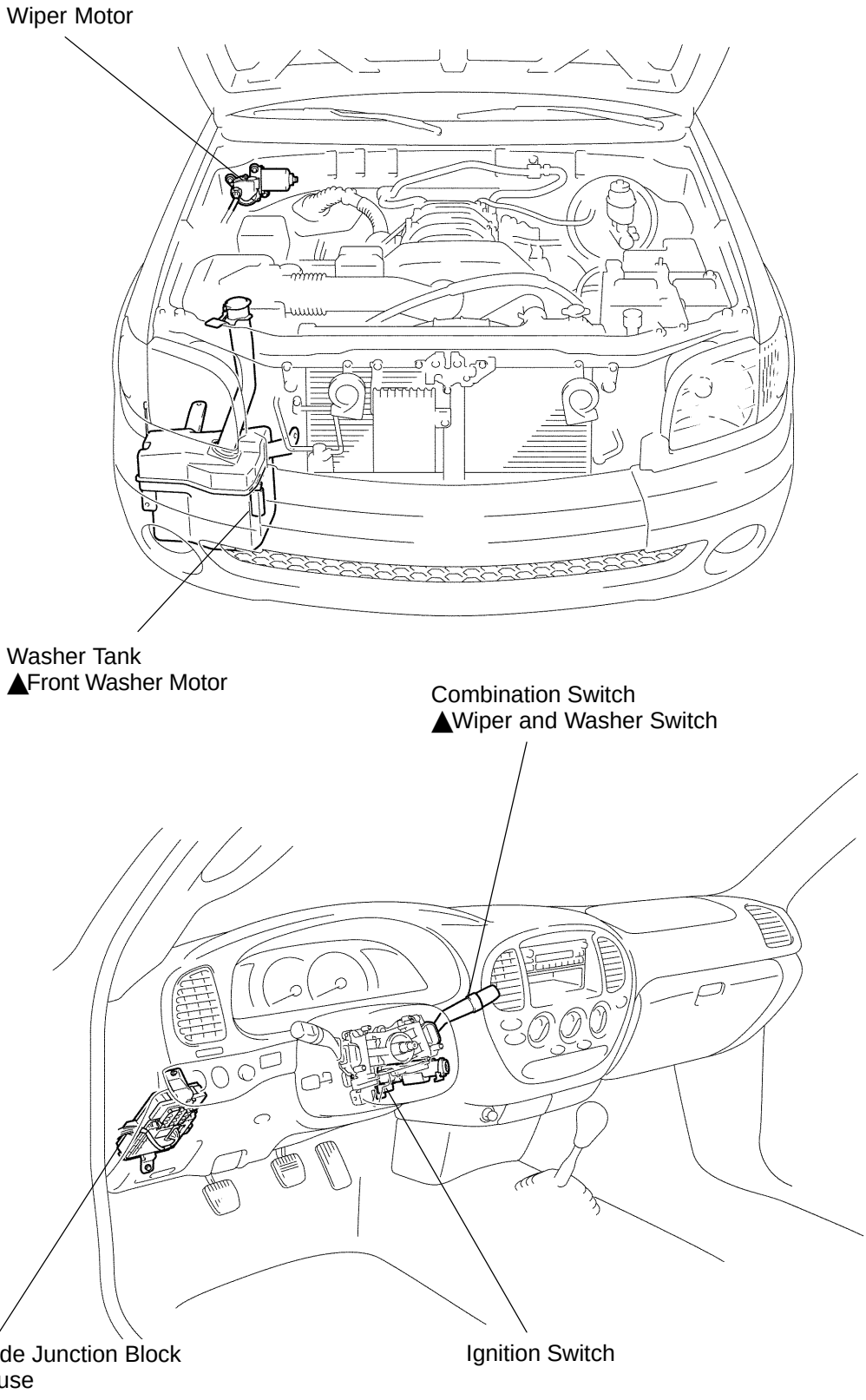

BE179–03

INSPECTION

1. INSPECT FRONT WIPER AND WASHER SWITCH CONTINUITY

w/ Mist:

Switch position	Tester connection	Specified condition
MIST	7 – 17	Continuity
OFF	7 – 16	Continuity
LO	7 – 17	Continuity
HI	8 – 17	Continuity
Washer ON	2 – 11	Continuity

w/ Intermittent:

Switch position	Tester connection	Specified condition
OFF	7 – 16	Continuity
INT	7 – 16	Continuity
LO	7 – 17	Continuity
HI	8 – 17	Continuity
Washer ON	2 – 11	Continuity

If the continuity is not as specified, replace the switch.

2. INSPECT INTERMITTENT OPERATION

(a) Turn the wiper switch to INT position.

(b) Turn the intermittent time control switch to FAST position.

(c) Connect the positive (+) lead from the battery to terminal 16 and the negative (–) lead to terminal 2.

(d) Connect the positive (+) lead from the voltmeter to terminal 7 and the negative (–) lead to terminal 2, check that the meter needle indicates battery positive voltage.

INT time control switch position	Voltage
FAST	Approx. 1 – 3 sec. — Battery positive voltage / 0 volt
SLOW	Approx. 10 – 15 sec. — Battery positive voltage / 0 volt

V03883

If the continuity is not as specified, replace the switch.

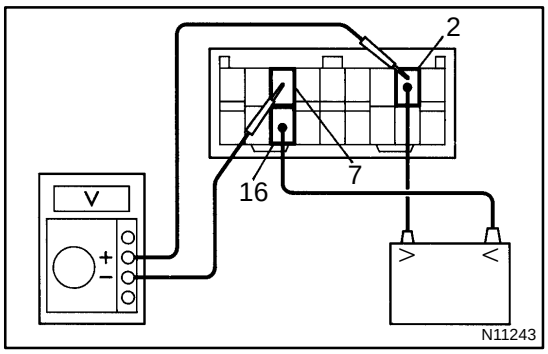

3. INSPECT WASHER LINKED OPERATION

(a) Connect the positive (+) lead from the battery to terminal 16 and the negative (–) lead to terminal 2.

(b) Connect the positive (+) lead from the voltmeter to terminal 7 and the negative (–) lead to terminal 2.

(c) Push in the washer switch, and check that the voltage changes as shown in the table.

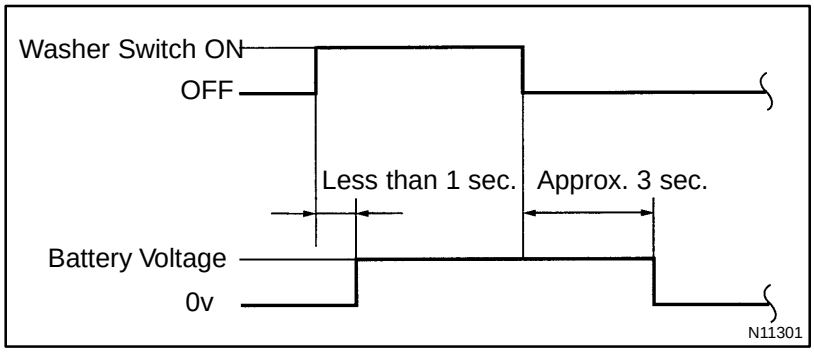

If the operation is not as specified, replace the wiper and washer switch.

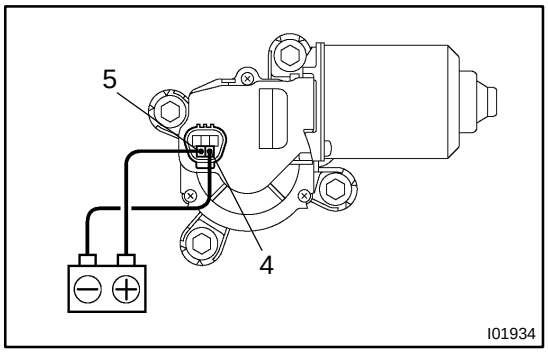

4. Low Speed:
INSPECT WIPER MOTOR OPERATION

Connect the positive (+) lead from the battery to terminal 5 and the negative (–) lead from the battery to the motor body or terminal 4, and check that the motor operates at low speed.
If the operation is not as specified, replace the motor.

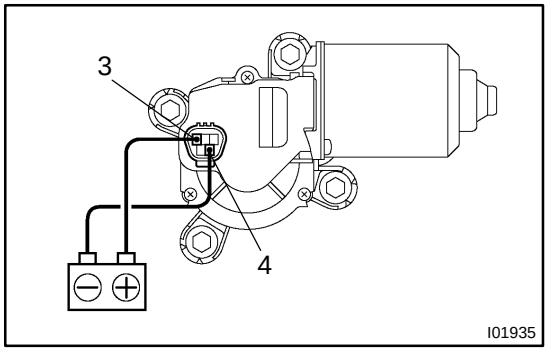

5. High Speed:
INSPECT WIPER MOTOR OPERATION

Connect the positive (+) lead from the battery to terminal 3 and the negative (–) lead from the battery to the motor body or terminal 4, and check that the motor operates at high speed.
If the operation is not as specified, replace the motor.

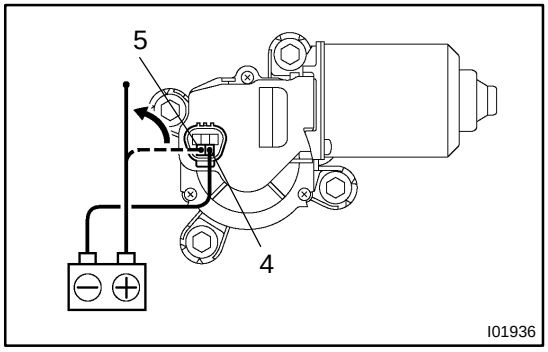

6. Stopping at Stop Position:
INSPECT WIPER MOTOR OPERATION

(a) Operate the motor at low speed and stop the motor operation anywhere except at the stop position by disconnecting positive (+) lead from terminal 5.

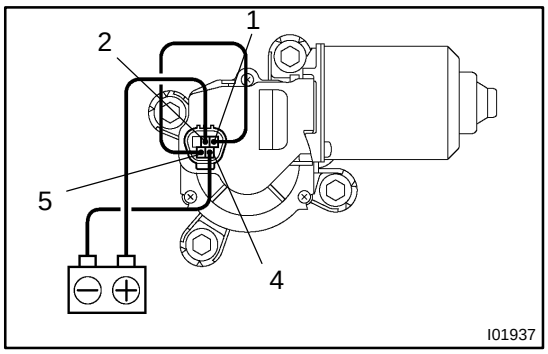

(b) Connect terminals 1 and 5.
(c) Connect the positive (+) lead from the battery to terminal 2 and the negative (–) lead from the battery to the motor body or terminal 4, and check that the motor stops running at the stop position after the motor operates again.

If the operation is not as specified, replace the motor.

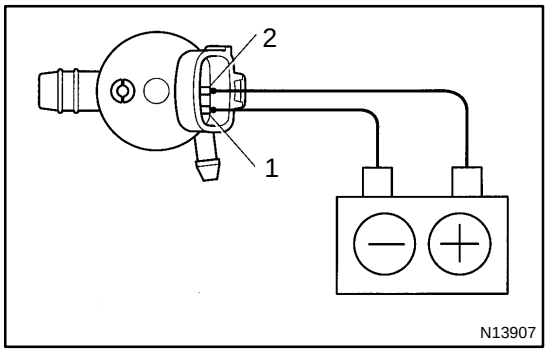

7. INSPECT WASHER MOTOR OPERATION

Connect the positive (+) lead from the battery to terminal 2 and the negative (–) lead to terminal 1, and check that the motor operates.

NOTICE:

These tests must be performed quickly (within 20 seconds) to prevent the coil from burning out.

If the operation is not as specified, replace the motor.

COMBINATION METER

LOCATION

BE17A–03

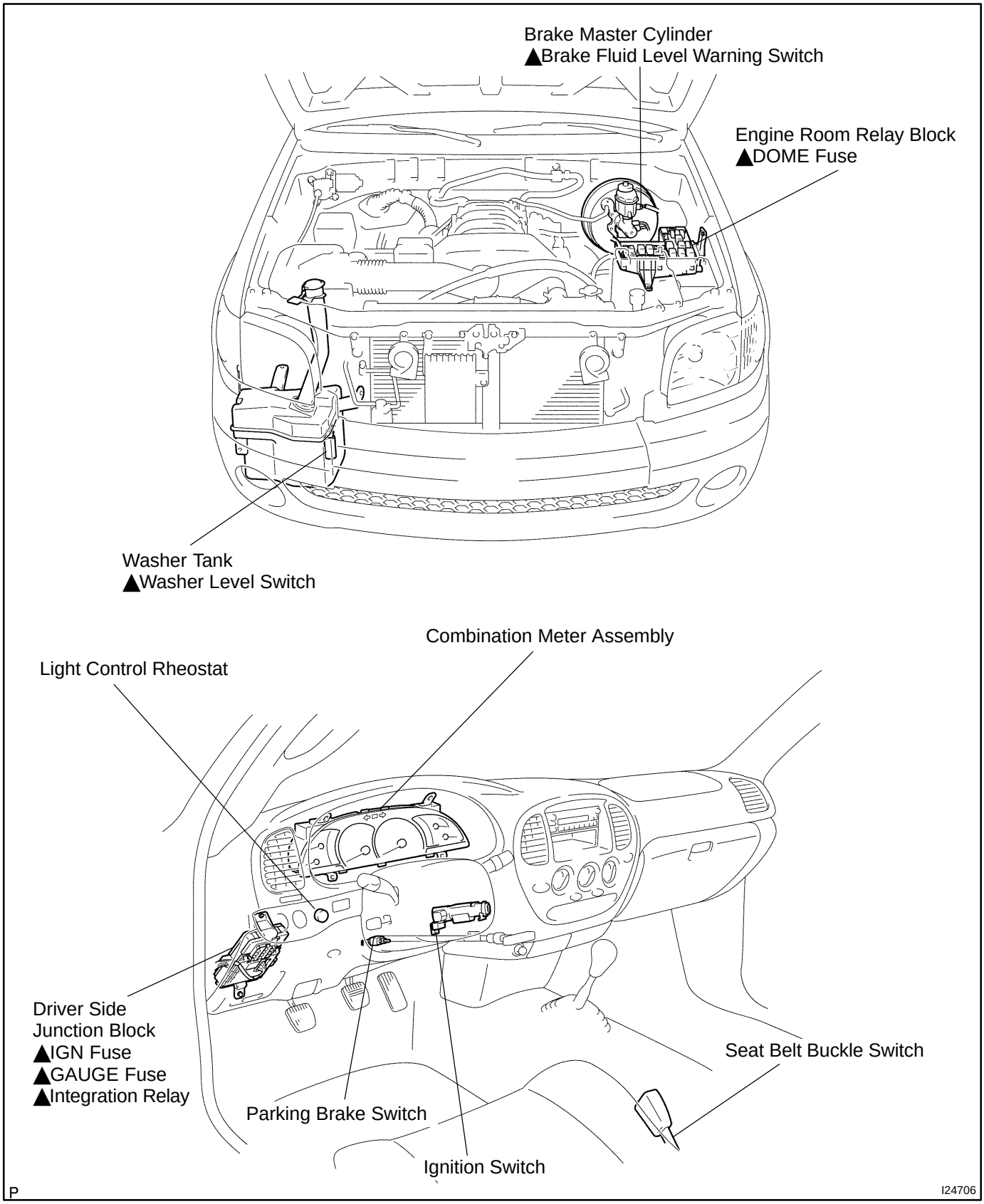

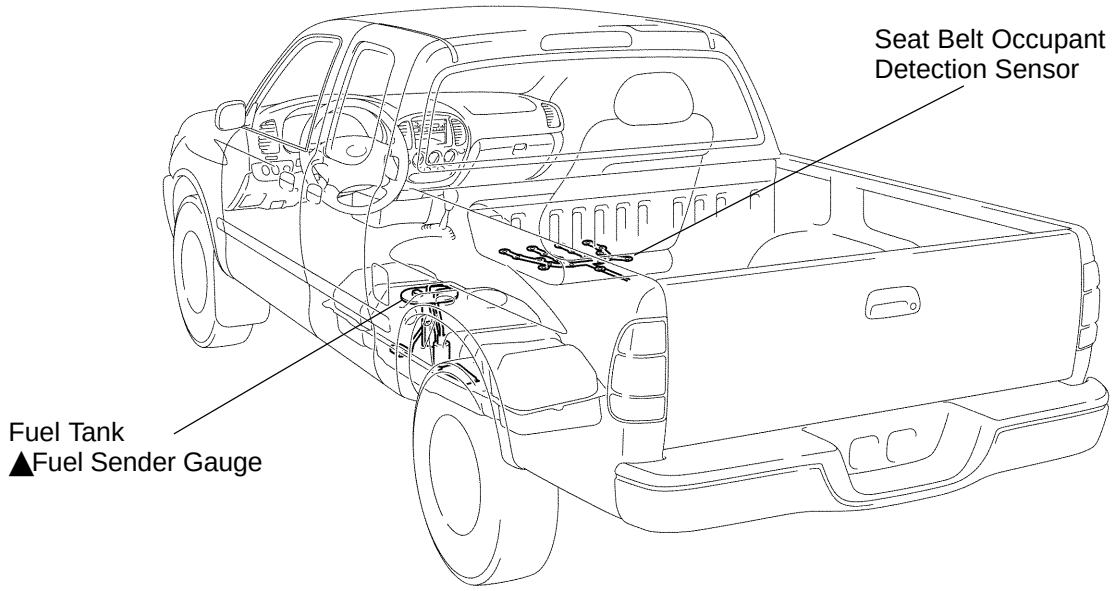
Seat Belt Occupant
Detection Sensor
Fuel Tank
▲Fuel Sender Gauge

I10538

BE2CX–01

CIRCUIT

W/o Tachometer:

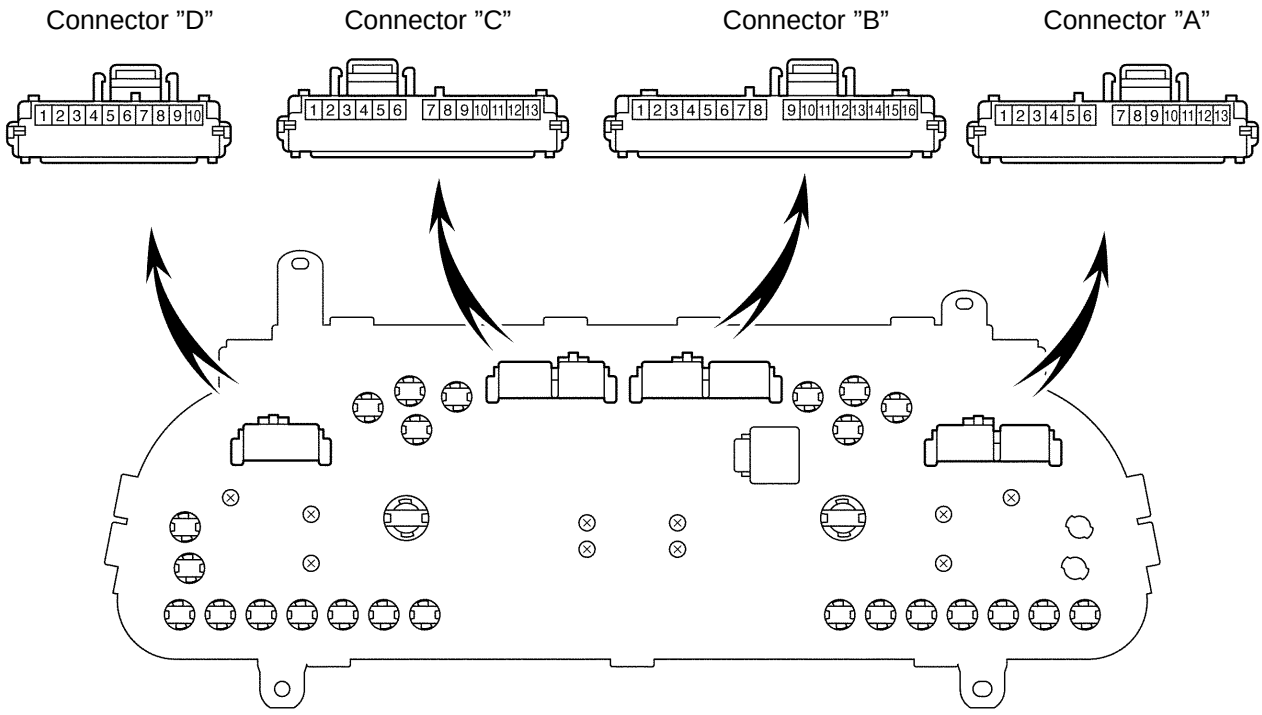

w/ Tachometer:

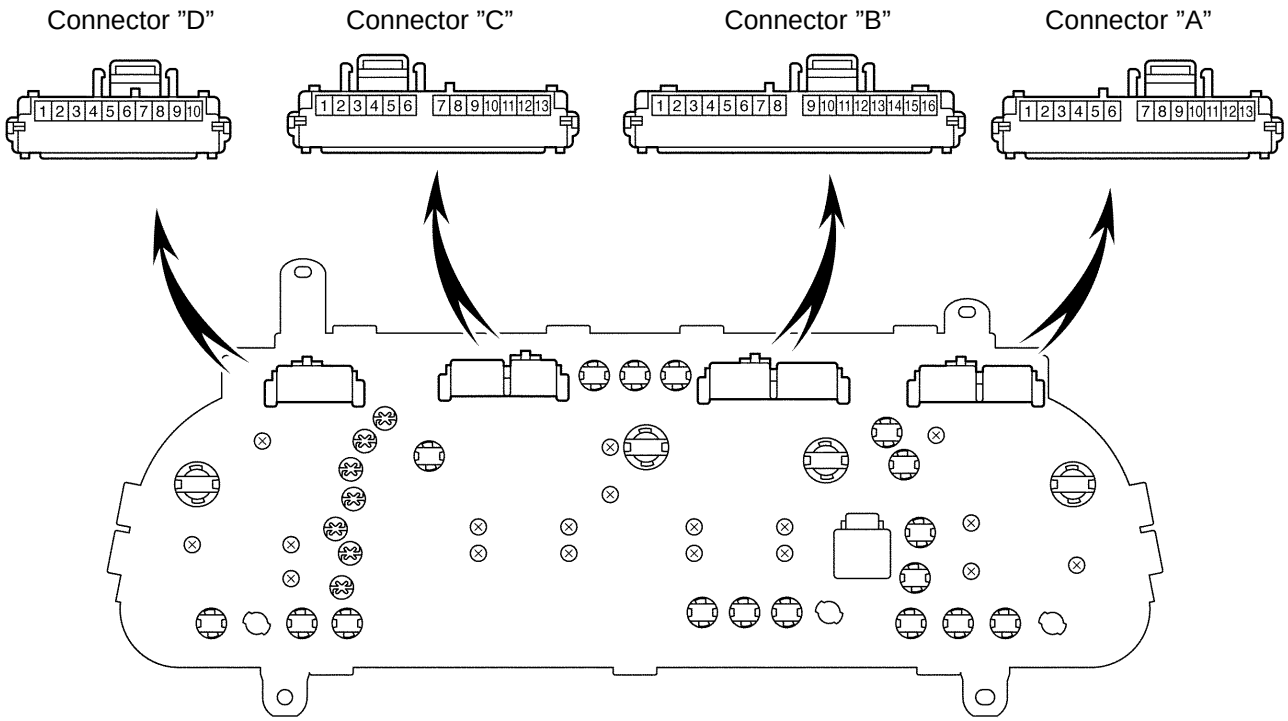

P

I10551

w/o Tachometer:

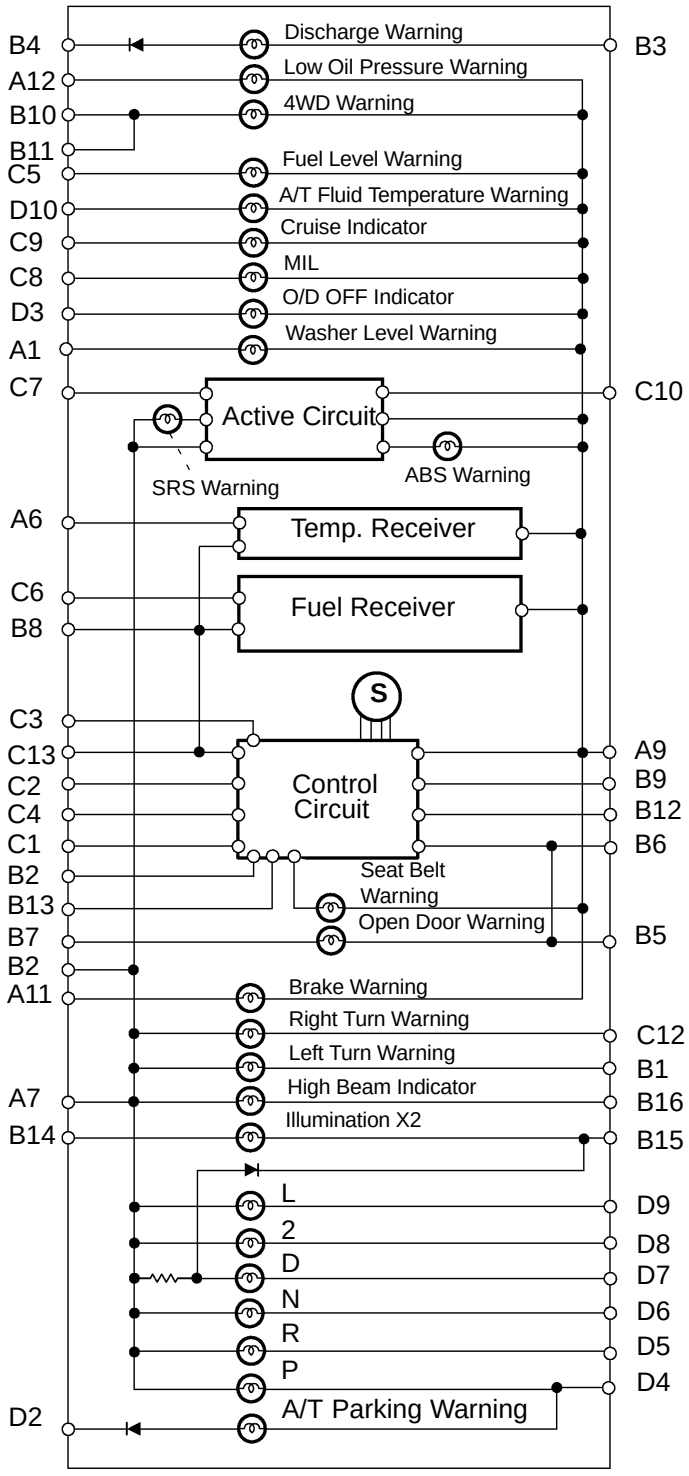

No.		Wiring Connector Side
A	1	Washer Fluid Level Warning Switch
	6	Engine Coolant Temperature Sender Gauge
	7	Ground
	9	GAUGE Fuse
	12	Low Oil Pressure Warning Switch
B	1	Turn Signal Flasher (LH Side)
	2	Key Unlock Warning Switch
	3	IGN Fuse
	4	Generator L Terminal
	5	DOME Fuse
	6	Ignition Key Cylinder Illumination +
	7	Door Courtesy Switch
	8	Gauge Ground
	9	Ignition Key Cylinder Illumination –
	10	ADD Actuator
	11	Integration Control Panel
	12	Seat Belt Buckle Switch
	13	Driver's Door Courtesy Switch
	14	Rheostat
	15	Integration Relay
	16	Integration Relay (w/ Daytime Running Light)
		Headlight (w/o Daytime Running Light)
C	1	Key Unlock Warning Switch
	2	Vehicle Speed Sensor
	3	ECM, 4WD Control ECU, Integration Relay
	4	Igniter
	5	Fuel Level Warning
	6	Fuel Sender Gauge
	7	ABS Actuator with ECU
	8	ECM
	9	ECM
	10	Center Airbag Sensor
	12	Turn Signal Flasher (RH Side)
	13	Vehicle Speed Sensor
D	2	Detection Switch
	3	ECM
	4	Park/Neutral Position Switch (P)
	5	Park/Neutral Position Switch (R)
	6	Park/Neutral Position Switch (N)
	7	Park/Neutral Position Switch (D)
	8	Park/Neutral Position Switch (2)
	9	Park/Neutral Position Switch (L)
	10	ECM

Ⓢ: Speedometer

I24993

w/ Tachometer (5VZ–FE):

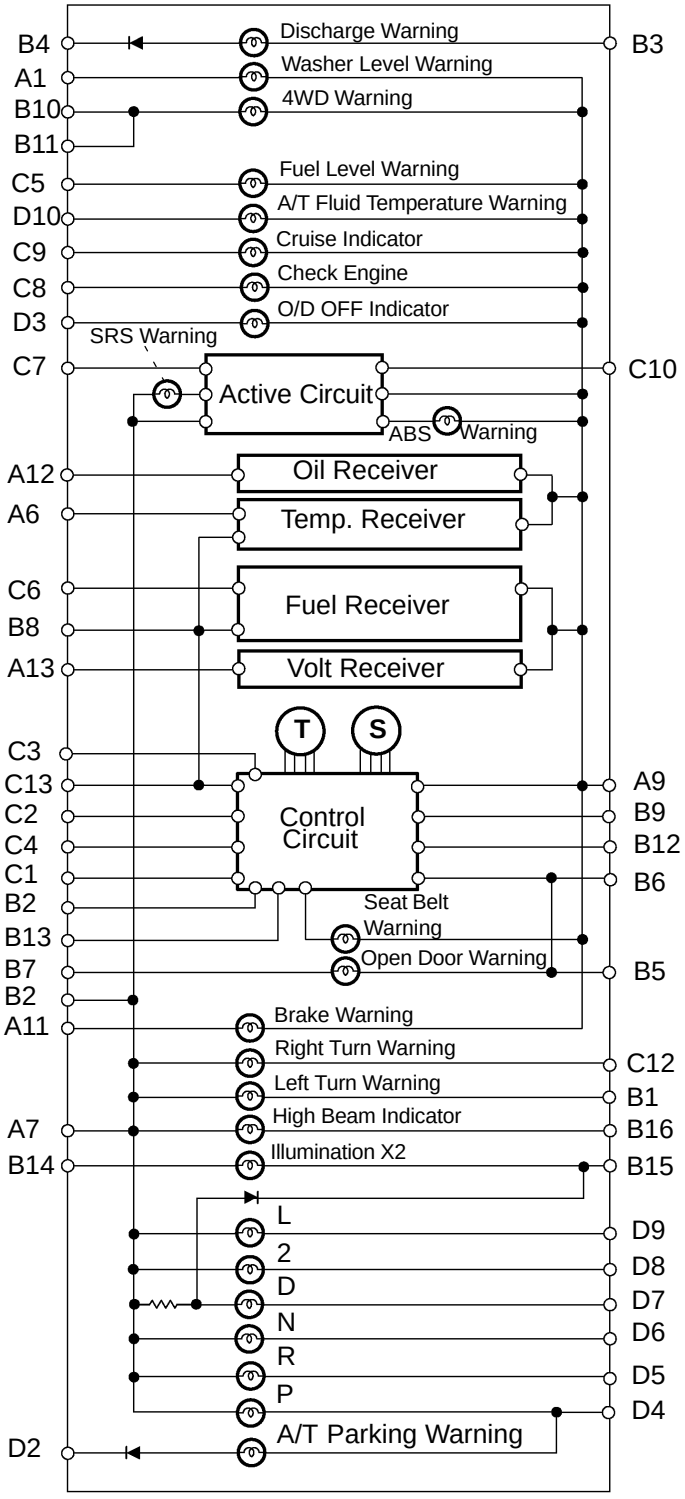

No.		Wiring Connector Side
A	1	Washer Fluid Level Warning Switch
	6	Engine Coolant Temperature Sender Gauge
	7	Ground
	9	GAUGE Fuse
	12	Low Oil Pressure Warning Switch
	13	Ground
B	1	Turn Signal Flasher (LH Side)
	2	Key Unlock Warning Switch
	3	IGN Fuse
	4	Generator L Terminal
	5	DOME Fuse
	6	Ignition Key Cylinder Illumination +
	7	Door Courtesy Switch
	8	Gauge Ground
	9	Ignition Key Cylinder Illumination –
	10	ADD Actuator
	11	Integration Control Panel
	12	Seat Belt Buckle Switch
	13	Driver's Door Courtesy Switch
	14	Rheostat
	15	Integration Relay
	16	Integration Relay (w/ Daytime Running Light)
		Headlight (w/o Daytime Running Light)
C	1	Key Unlock Warning Switch
	2	Vehicle Speed Sensor
	3	ECM, 4WD Control ECU, Integration Relay
	4	Igniter
	5	Fuel Level Warning
	6	Fuel Sender Gauge
	7	ABS Actuator with ECU
	8	ECM
	9	ECM
	10	Center Airbag Sensor
	12	Turn Signal Flasher (RH Side)
	13	Vehicle Speed Sensor
D	2	Detection Switch
	3	ECM
	4	Park/Neutral Position Switch (P)
	5	Park/Neutral Position Switch (R)
	6	Park/Neutral Position Switch (N)
	7	Park/Neutral Position Switch (D)
	8	Park/Neutral Position Switch (2)
	9	Park/Neutral Position Switch (L)
	10	ECM

Ⓣ : Tachometer

Ⓢ : Speedometer

I24992

w/ Tachometer (2UZ–FE):

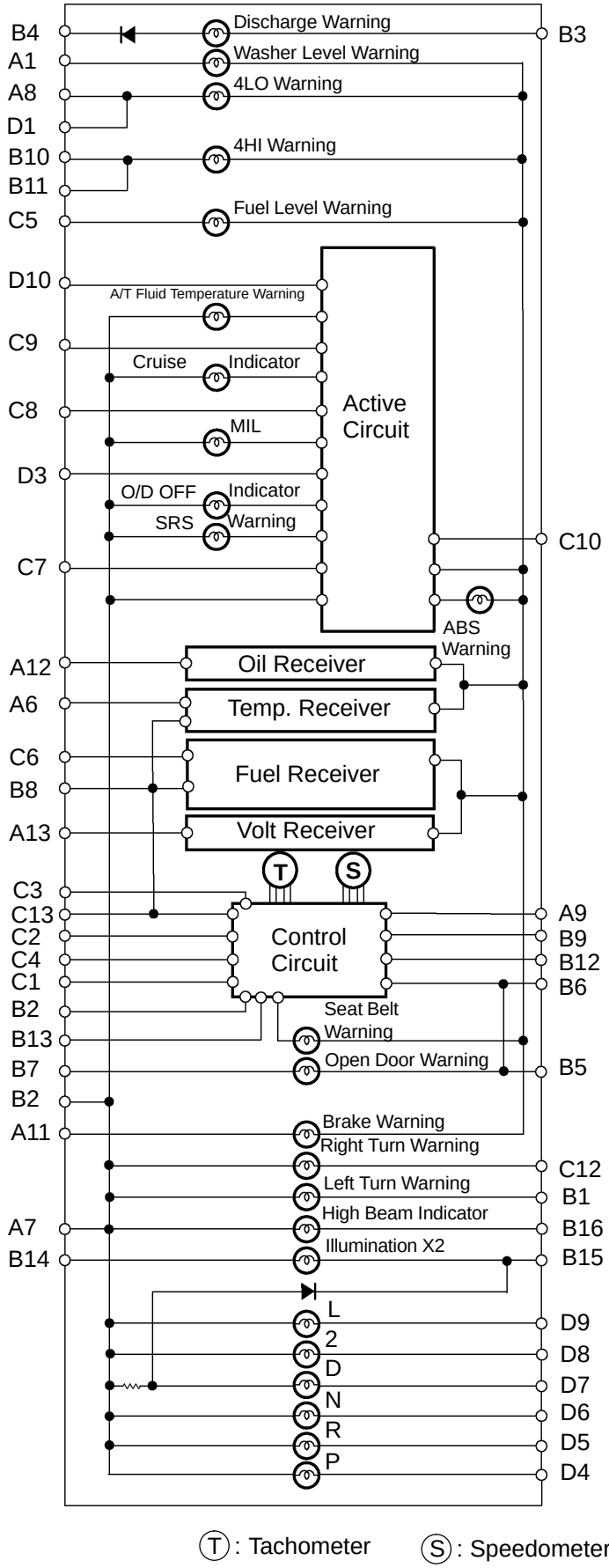

Ⓣ : Tachometer Ⓢ : Speedometer

No.		Wiring Connector Side
A	1	Washer Fluid Level Warning Switch
	6	Engine Coolant Temperature Sender Gauge
	7	Ground
	8	Integration Control Panel
	9	GAUGE Fuse
	12	Low Oil Pressure Warning Switch
	13	Ground
B	1	Turn Signal Flasher (LH Side)
	2	Key Unlock Warning Switch
	3	IGN Fuse
	4	Generator L Terminal
	5	DOME Fuse
	6	Ignition Key Cylinder Illumination +
	7	Door Courtesy Switch
	8	Gauge Ground
	9	Ignition Key Cylinder Illumination –
	10	4WD Control ECU
	11	Integration Control Panel
	12	Seat Belt Buckle Switch
	13	Driver's Door Courtesy Switch
	14	Rheostat
	15	Integration Relay
	16	Integration Relay (w/ Daytime Running Light)
		Headlight (w/o Daytime Running Light)
C	1	Key Unlock Warning Switch
	2	Vehicle Speed Sensor
	3	ECM, 4WD Control ECU, Integration Relay
	4	ECM
	5	Fuel Level Warning
	6	Fuel Sender Gauge
	7	ABS Actuator with ECU
	8	ECM
	9	ECM
	10	Center Airbag Sensor
	12	Turn Signal Flasher (RH Side)
	13	Vehicle Speed Sensor
D	1	4WD Control ECU
	3	ECM
	4	Park/Neutral Position Switch (P)
	5	Park/Neutral Position Switch (R)
	6	Park/Neutral Position Switch (N)
	7	Park/Neutral Position Switch (D)
	8	Park/Neutral Position Switch (2)
	9	Park/Neutral Position Switch (L)
	10	ECM

I24994

BE2CG–01

INSPECTION

1. INSPECT SPEEDOMETER ON–VEHICLE

Using a speedometer tester, inspect the speedometer for indication error and check the operation of the odometer.

HINT:

Tire wear and tire over or under inflation will increase the indication error.

USA (mph)		CANADA (km/h)	
Standard indication	Allowable range	Standard indication	Allowable range
20	19 – 222	20	18 – 23
40	39 – 42.5	40	40 – 44
60	59.5 – 63.5	60	60 – 64.5
80	79.5 – 84	80	80 – 85
100	100 – 105	100	100 – 105
		120	120 – 125.5
		140	140 – 146
		160	160 – 167

If the error is excessive, replace the speedometer.

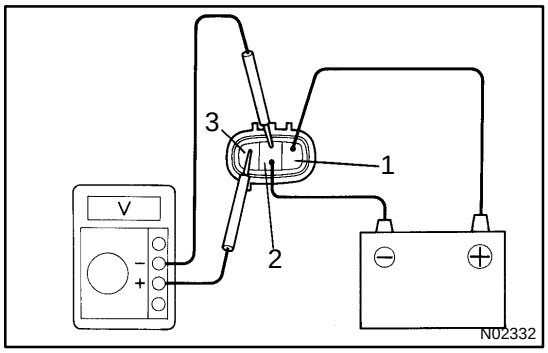

2. INSPECT VEHICLE SPEED SENSOR OPERATION

(a) Connect the positive (+) lead from the battery to terminal 1 and negative (–) lead to terminal 2.

(b) Connect the positive (+) lead from the tester to terminal 3 and the negative (–) lead to terminal 2.

(c) Rotate the shaft.

(d) Check that the voltage between terminals 2 and 3 changes from approx. 0 V to 11 V or more.

HINT:

The voltage change should be checked 4 times during each revolution of the speed sensor shaft.

If the result is not as specified, replace the sensor.

w/ Tachometer:

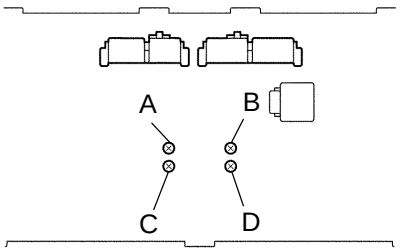

w/o Tachometer:

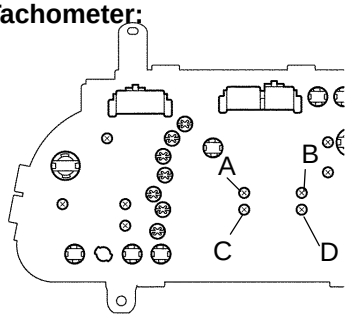

3. INSPECT SPEEDOMETER RESISTANCE

Measure the resistance between terminals with the pointer fixed to the stopper.

Tester connection	Resistance (Ω)
A – B	160
C – D	160

If the resistance value is not as the specified, replace the meter.

4. INSPECT TACHOMETER/ON–VEHICLE

(a) Connect a tune–up test tachometer, and start the engine.

NOTICE:

- **Reversing the connection of the tachometer will damage the transistors and diodes inside the tachometer.**
- **When removing or installing the tachometer, be careful not to drop or subject it to heavy shocks.**

(b) Compare the tester and tachometer indications.

DC 13.5 V 20˚C at (77˚F)

Standard indication	Allowable range
700	630 – 770
1,000	900 – 1,100
2,000	1,875 – 2,125
3,000	2,850 – 3,150
4,000	3,850 – 4,150
5,000	4,850 – 5,150
6,000	5,820 – 6,180

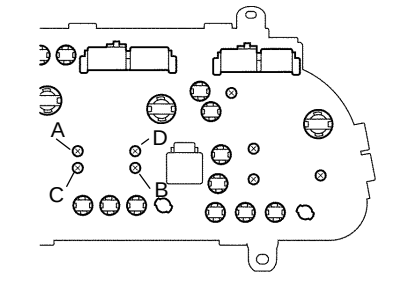

5. INSPECT TACHOMETER RESISTANCE

Measure the resistance between terminals with the pointer fixed to the stopper.

Tester connection	Resistance (Ω)
A – B	140 – 185
C – D	130 – 175

If the resistance value is not as specified, replace the meter.

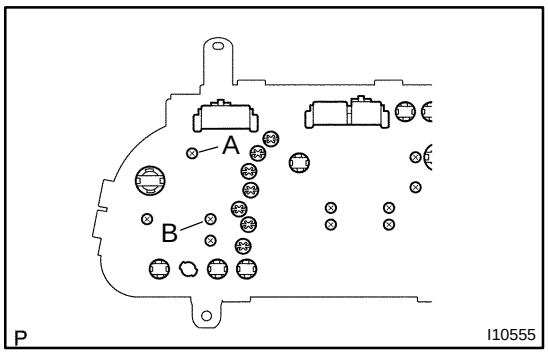

6. INSPECT VOLT GAUGE SYSTEM

Measure the resistance between terminals A and B.

Resistance: Approx. 347 Ω

If the resistance value is not as specified, replace the gauge.

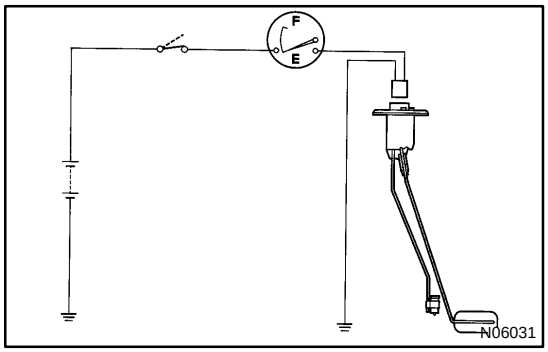

7. INSPECT FUEL RECEIVER GAUGE OPERATION

(a) Disconnect the connector from the sender gauge.

(b) Turn the ignition switch ON, and check that the receiver gauge needle indicates EMPTY.

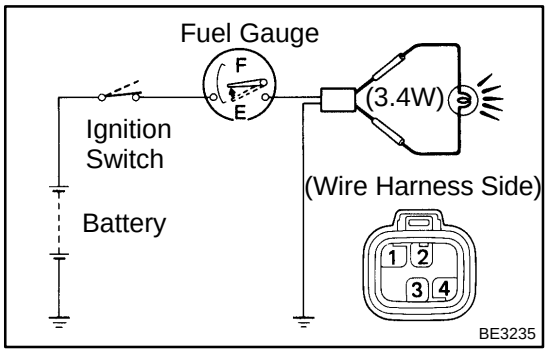

(c) Connect terminals 1 and 3 on the wire harness side connector through a 3.4 W test bulb.

(d) Turn the ignition switch ON, and check that the bulb lights up and the receiver gauge needle moves towards the full side.

HINT:

Because of the silicon oil in the gauge, it will take a short time for needle to stabilize.

If the operation is not as specified, inspect the receiver gauge resistance.

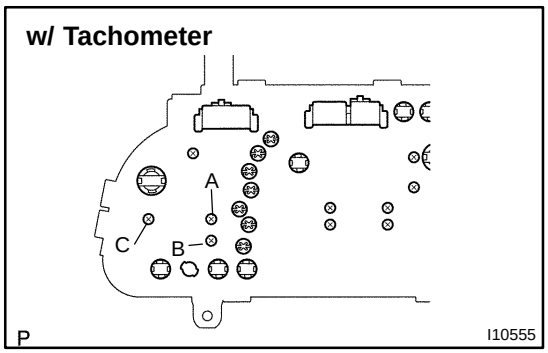

8. INSPECT FUEL RECEIVER GAUGE RESISTANCE

Measure the resistance between terminals.

Tester connection	Resistance (Ω)
A – B	Approx. 83
A – C	Approx. 268
B – C	Approx. 160

If the resistance value is not as specified, replace the receiver gauge.

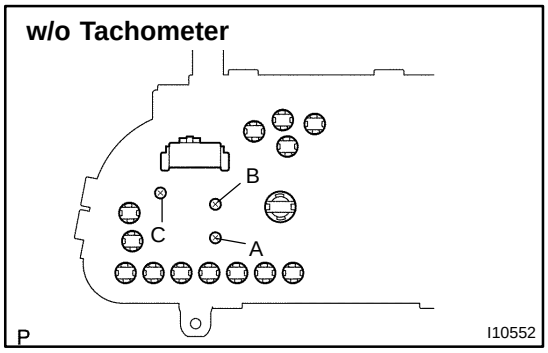

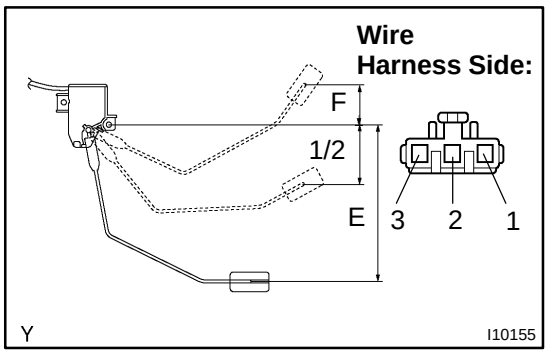

9. INSPECT FUEL SENDER GAUGE RESISTANCE

Measure the resistance between terminals 1 and 2 at each float position.

Float position mm (in.)	Resistance (Ω)
F: Approx. –43.5 (–1.71) ± 2 (0.12)	Approx. 3.0
1/2: Approx. 70.8 (2.79)	Approx. 32.5
E: Approx. –178 (–7.01) ± 2 (0.12)	Approx. 110

If the resistance value is not as specified, replace the main sender gauge.

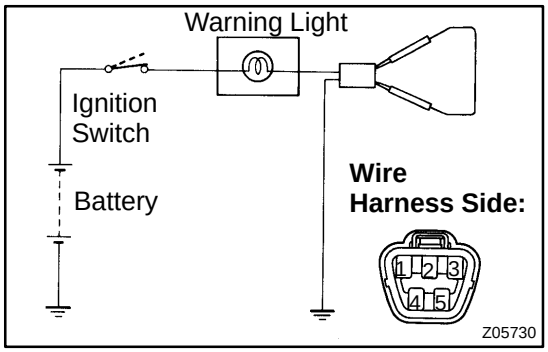

10. INSPECT FUEL LEVEL WARNING LIGHT

(a) Disconnect the connector from the sender gauge.

(b) Connect terminals 1 and 3 on the wire harness side connector.

(c) Turn the ignition switch ON, and check that the warning light lights up.

If the warning light does not light up, inspect the bulb or wire harness.

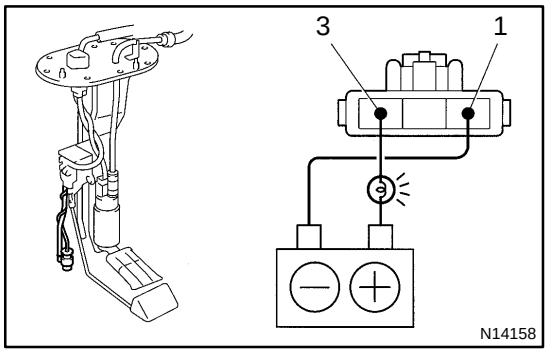

11. INSPECT FUEL LEVEL WARNING SWITCH

(a) Apply battery positive voltage between terminals 1 and 3 through a 3.4 W test bulb, and check that the bulb lights up.

HINT:

It will take a short time for bulb to light up.

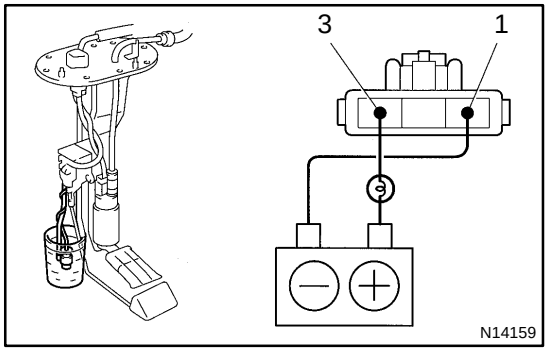

(b) Submerge the switch in fuel, and check that the bulb goes off.

If the operation is not as specified, replace the sender gauge.

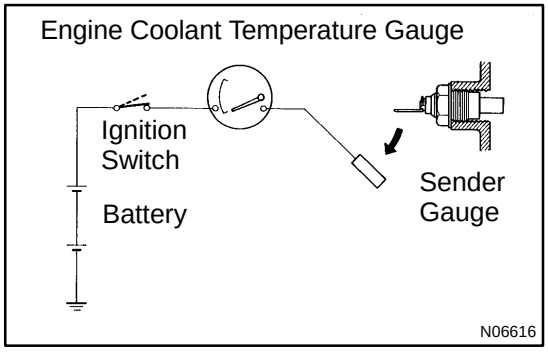

12. INSPECT ENGINE COOLANT TEMPERATURE RECEIVER GAUGE OPERATION

(a) Disconnect the connector from the sender gauge.

(b) Turn the ignition switch ON, and check that the receiver gauge needle indicates COOL.

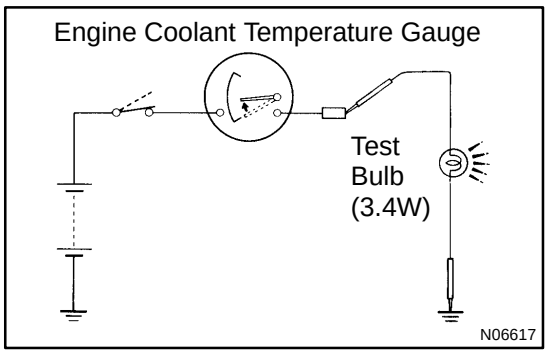

(c) Ground the terminal on the wire harness side connecter through a 3.4 W test bulb.
(d) Turn the ignition switch ON, check that the bulb lights up and the receiver gauge needle moves to the hot side.

If the operation is not as specified, measure the receiver gauge resistance.

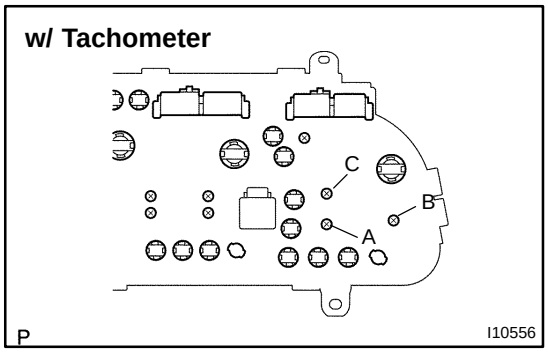

13. INSPECT ENGINE COOLANT TEMPERATURE RECEIVER GAUGE RESISTANCE

Measure the resistance between terminals.

w/ Tachometer:

Tester connection	Resistance (Ω)
A – B	Approx. 55.9
A – C	Approx. 136
B – C	Approx. 211

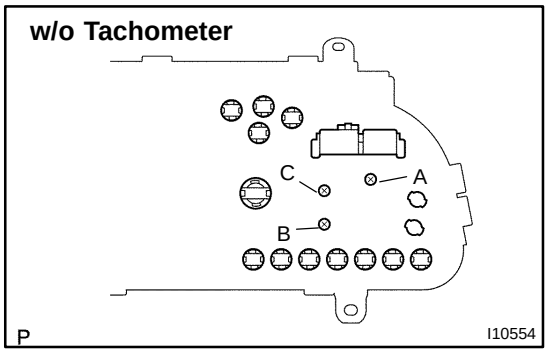

w/o Tachometer:

Tester connection	Resistance (Ω)
A – B	Approx. 54.5
A – C	Approx. 139
B – C	Approx. 214

HINT:
This circuit includes the diode.
If the resistance value is not as specified, replace the receiver gauge.

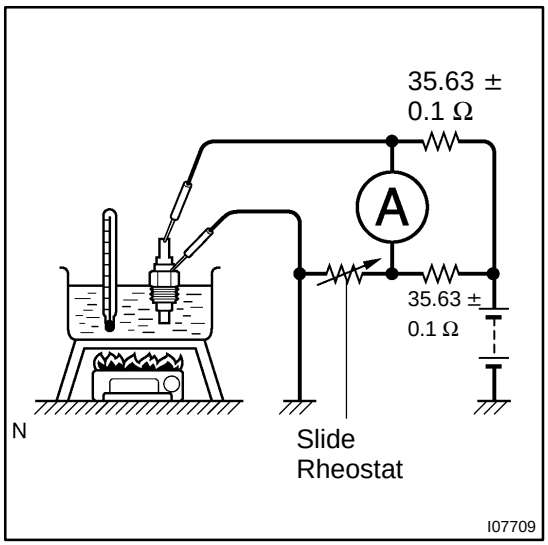

14. INSPECT ENGINE COOLANT TEMPERATURE SENDER GAUGE RESISTANCE

Connect the wire harness as shown in the illustration, and adjust the ammeter pointer to indicate ”0” using the slide rheostat, then read the rheostat indication.

Temperature ˚C (˚F)	Resistance (Ω)
50 (122.0)	160 – 240
120 (248.0)	17.1 – 21.2

If the resistance value is not as specified, replace the engine coolant sender gauge.

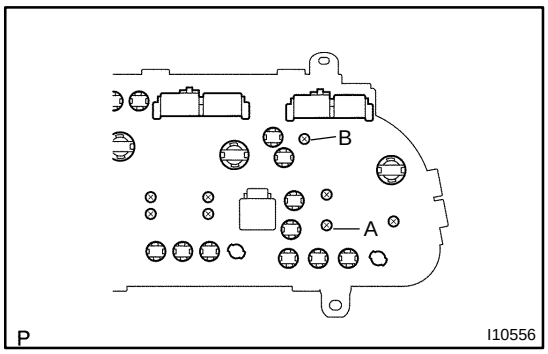

15. INSPECT OIL PRESSURE GAUGE RESISTANCE

Measure the resistance between terminals A and B.

Tester connection	Resistance (Ω)
A – B	Approx. 25.0

If the resistance value is not as specified, replace the receiver gauge.

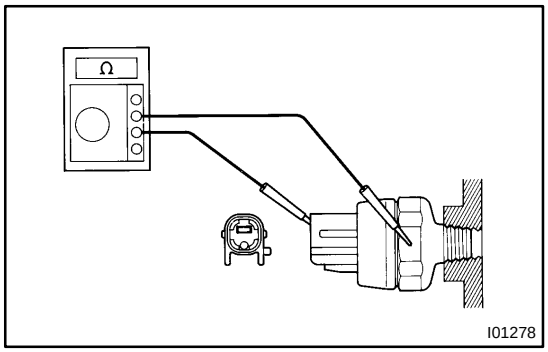

16. INSPECT OIL PRESSURE SWITCH CONTINUITY

(a) Disconnect the connector from the switch.
(b) Check that continuity exists between the terminal and ground with the engine stopped.
(c) Check that no continuity exists between the terminal and ground with the engine running.

HINT:

The oil pressure should be over 24.5 kPa (0.25 kgf/cm^2, 3.55 psi).

If the continuity is not as specified, replace the switch.

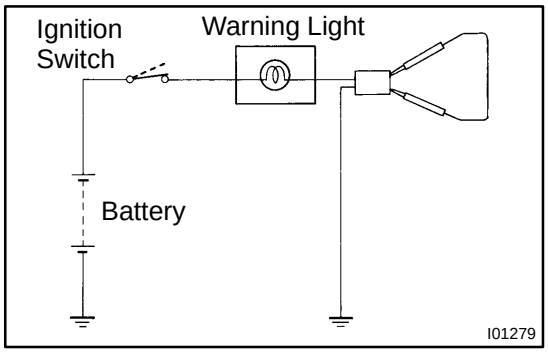

17. INSPECT BRAKE WARNING LIGHT

(a) Disconnect the connector from the brake fluid warning switch.
(b) Release the parking brake pedal.
(c) Connect the terminals on the harness side of the level warning switch connector.
(d) Start the engine, and check that the warning light lights up.

If the warning light does not light up, inspect the bulb or wire harness.

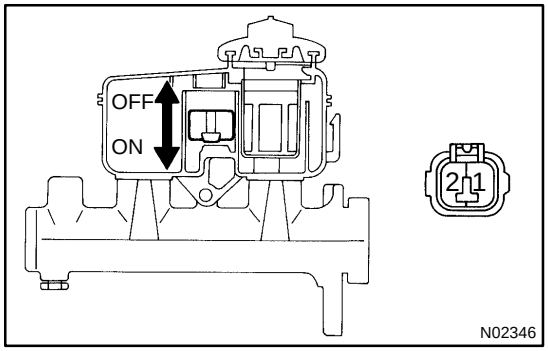

18. INSPECT BRAKE FLUID LEVEL WARNING SWITCH CONTINUITY

(a) Remove the reservoir tank cap and strainer.
(b) Disconnect the connector.
(c) Check that no continuity exists between the terminals with the switch OFF (float up).
(d) Use siphon, etc. to take fluid out of the reservoir tank.
(e) Check that continuity exists between the terminals with the switch ON (float down)

If the continuity is not as specified, replace switch.

(f) Pour the fluid back in the reservoir tank.

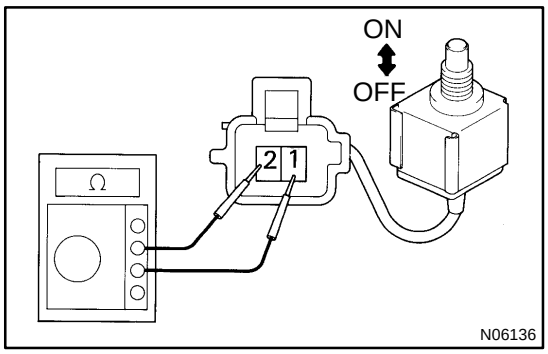

19. INSPECT PARKING BRAKE SWITCH CONTINUITY

(a) Check that there is continuity between the terminals with the switch ON (switch pin released).

(b) Check that there is no continuity between the terminals with the switch OFF (switch pin pushed in).

If the continuity is not as specified, replace the switch.

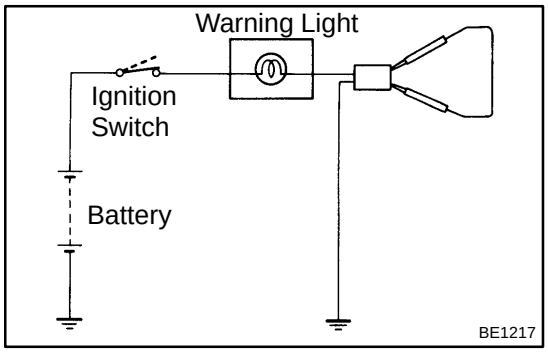

20. INSPECT WASHER LEVEL WARNING LIGHT

(a) Disconnect the connectors from the level warning switch.

(b) Connect the terminals on the wire harness side of the level warning switch connector.

(c) Turn the ignition switch ON, and check that the warning light comes on.

If the warning light does not light up, inspect the bulb.

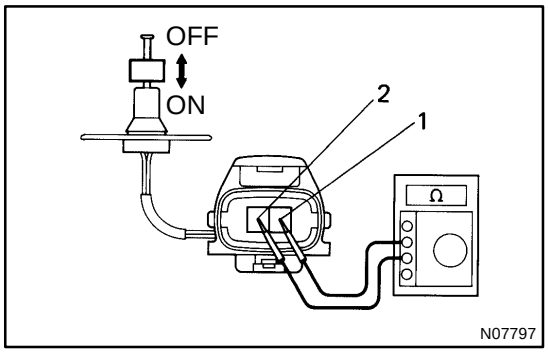

21. INSPECT WASHER LEVEL SWITCH CONTINUITY

(a) Check that there is no continuity between the terminals with the switch OFF (float up).

(b) Check that there is continuity between terminals with the switch ON (float down).

If the continuity is not as specified, replace the switch.

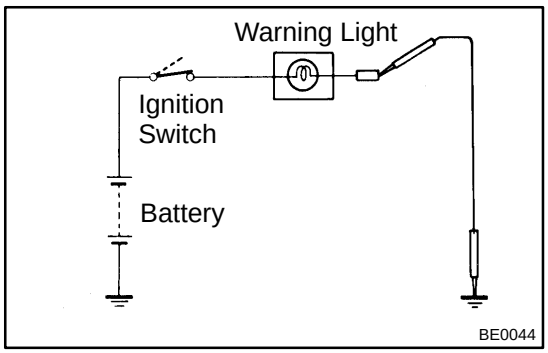

22. INSPECT DRIVER'S SEAT BELT WARNING LIGHT

(a) Disconnect the connector B from the combination meter.

(b) Connect the negative (–) lead from the battery to terminal 9.

(c) Turn the ignition switch ON and check that the warning light lights up.

If the warning light does not light up, inspect the bulb or wire harness.

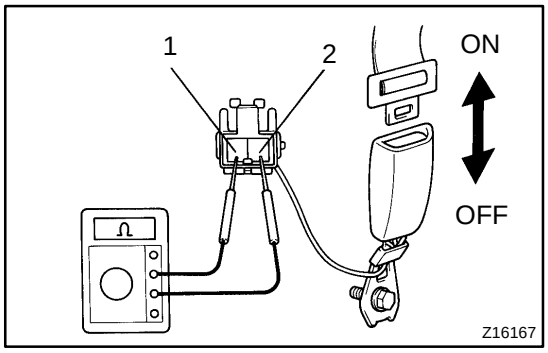

23. Bench seat:
INSPECT BUCKLE SWITCH CONTINUITY

(a) Check that continuity exists between terminals 1 and 2 on the switch connector with the switch ON (belt fastened).

(b) Check that no continuity exists between terminals 1 and 2 on the switch side connector with the switch OFF (belt unfastened).

If the continuity is not as specified, replace the inner seat belt.

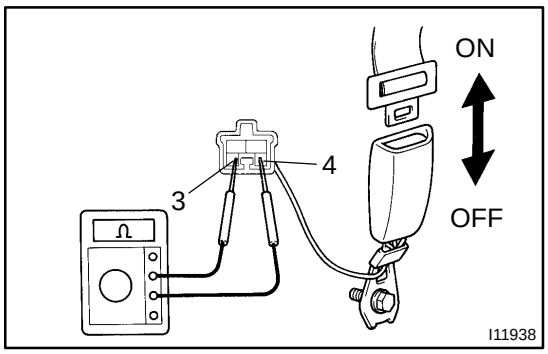

24. Separate seat, captain seat (w/o Power seat):
INSPECT BUCKLE SWITCH CONTINUITY

(a) Check that continuity exists between terminals 3 and 4 on the switch connector with the switch ON (belt fastened).

(b) Check that no continuity exists between terminals 3 and 4 on the switch side connector with the switch OFF (belt unfastened).

If the continuity is not as specified, replace the inner seat belt.

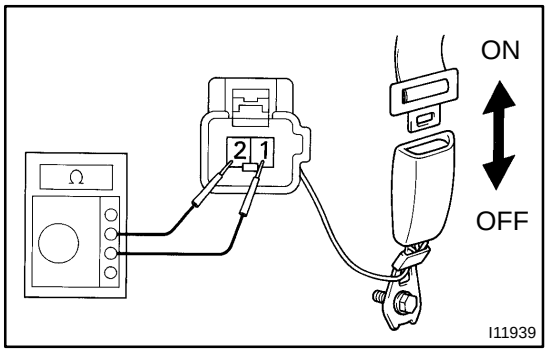

25. w/ Power seat:
INSPECT BUCKLE SWITCH CONTINUITY

(a) Check that continuity exists between terminals 1 and 2 on the switch connector with the switch ON (belt fastened).

(b) Check that no continuity exists between terminals 1 and 2 on the switch side connector with the switch OFF (belt unfastened).

If the continuity is not as specified, replace the inner seat belt.

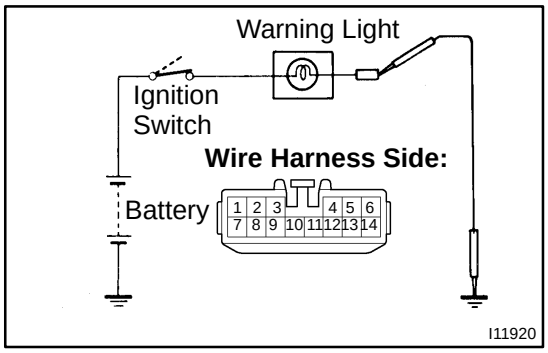

26. 2UZ–FE:
INSPECT ”4LO/4HI”, 4WD” INDICATOR LIGHT

(a) Remove the center cluster finish panel.

(b) Disconnect the connector from the center cluster integration.

(c) ”4LO” indicator:
Ground terminal 3 on the wire harness side connector.

(d) ”4HI” indicator:
Ground terminal 2 on the wire harness side connector.

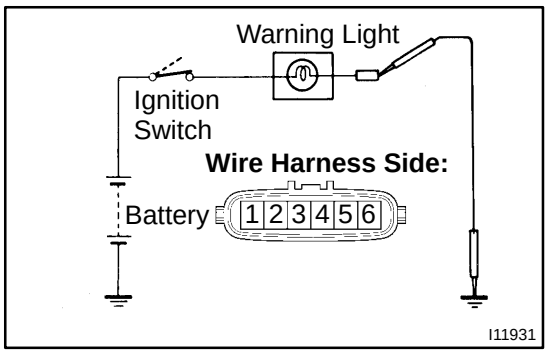

27. 5VZ–FE:
INSPECT ”4WD” INDICATOR LIGHT

(a) Disconnect the connectors from the A.D.D. actuator.

(b) ”4WD” indicator:
Ground terminal 3 on the wire harness side connector.

(c) Turn the ignition switch ON, and check that the warning light lights up.

If the warning light does not light up, inspect the bulb or wire harness.

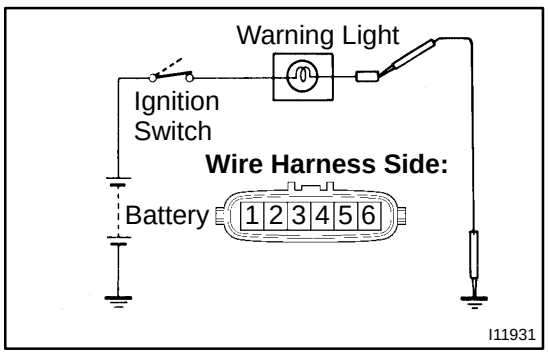

28. 5VZ–FE:
INSPECT ”A/T P” INDICATOR LIGHT

(a) Disconnect the connectors from the A.D.D. actuator.

(b) ”A/T P” indicator:
Ground terminal 1 on the wire harness side connector.

(c) Turn the ignition switch ON, and check that the warning light lights up.

If the warning light does not light up, inspect the bulb or wire harness.

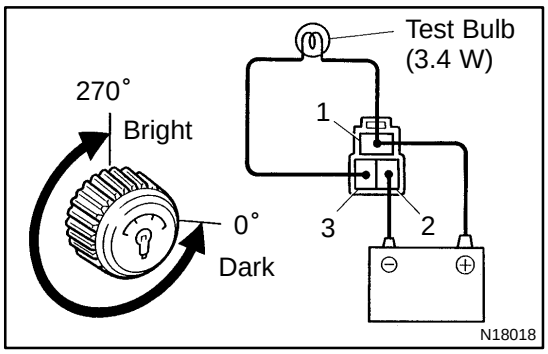

29. INSPECT LIGHT CONTROL RHEOSTAT OPERATION

(a) Connect terminals 1 and 3 through a 3.4 W test bulb.
(b) Connect the positive (+) lead from the battery to terminal 1 and the negative (–) lead to terminal 2.
(c) Turn the rheostat knob fully counterclockwise, and check that the test bulb goes off.
(d) Gradually turn the rheostat knob clockwise, and check that the test bulb brightness changes from dark to bright.

If the operation is not as specified, replace the rheostat.

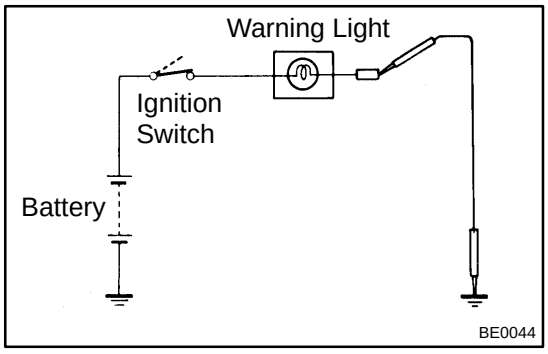

30. INSPECT OPEN DOOR WARNING LIGHT

(a) Disconnect the connector from the door courtesy switch and ground terminal on the wire harness side.
(b) Turn the ignition switch ON, and check that the warning light lights up.

If the warning light does not light up, inspect the bulb.

MIRROR HEATER SYSTEM

LOCATION

BE2CH–01

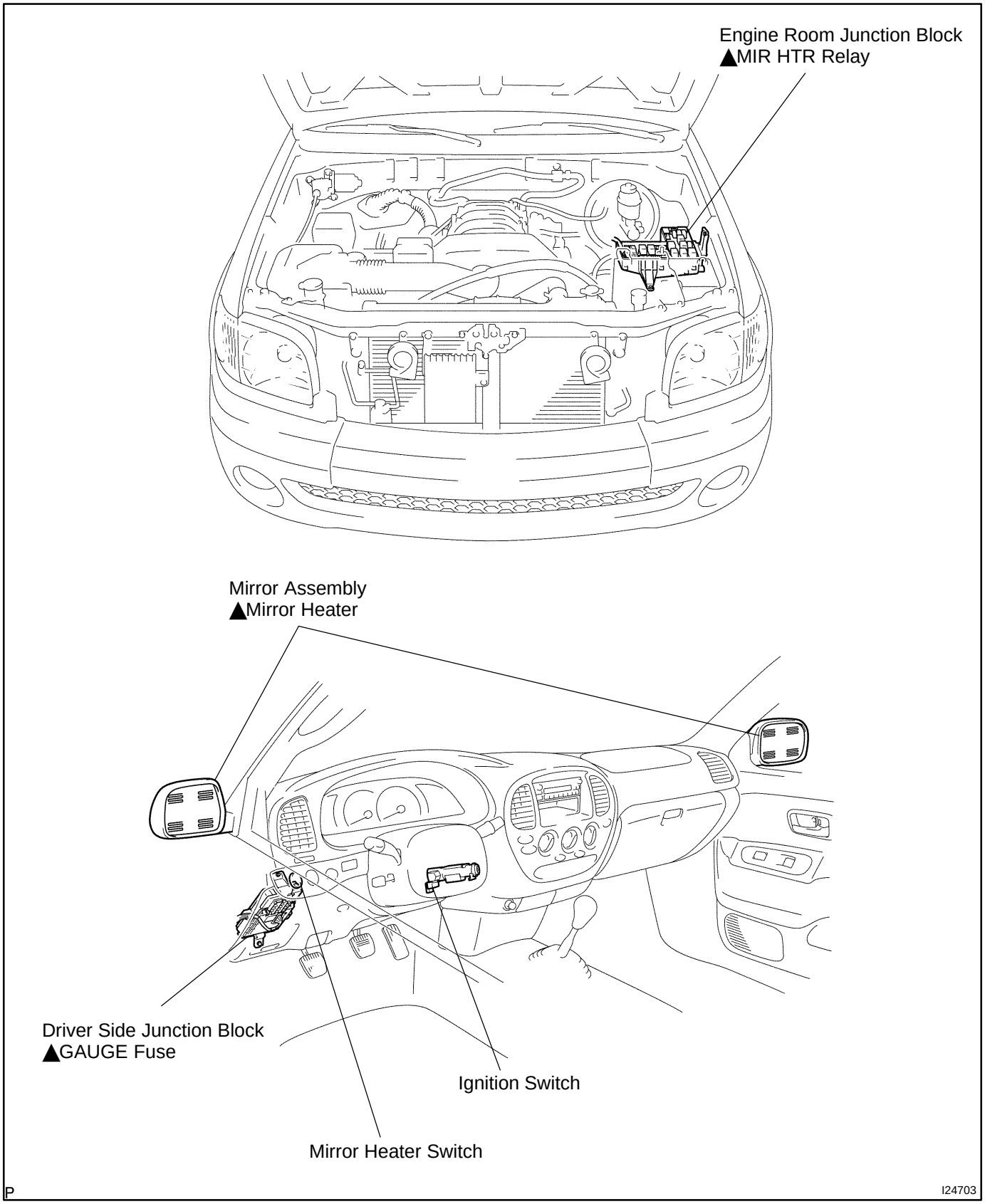

BE2CI–01

INSPECTION

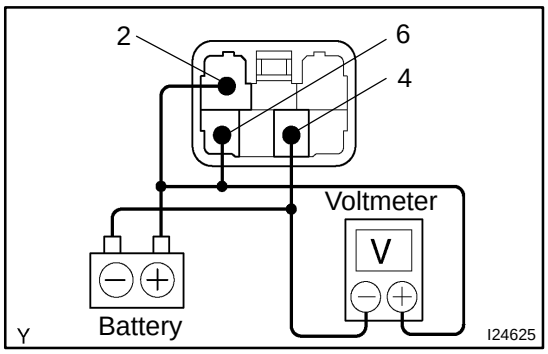

1. INSPECT MIRROR HEATER SWITCH TIMER OPERATION

(a) Connect the positive (+) lead from the battery to terminals 2 and 6 of the mirror heater switch and the negative (–) lead to terminal 4.

(b) Connect the positive (+) lead from the voltmeter to terminal 6 of the mirror heater switch and the negative (–) lead to terminal 4.

(c) When the switch is OFF, the voltage should be approx. 12 V.

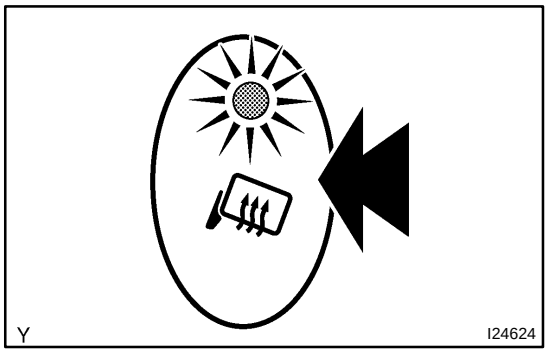

(d) Push the mirror heater switch ON and check that the indicator lights up and that the voltage is less than 1 V.

(e) After 15 minutes, check that the switch is OFF and the voltage is approx. 12 V.

If the result is not as specified, replace the switch.

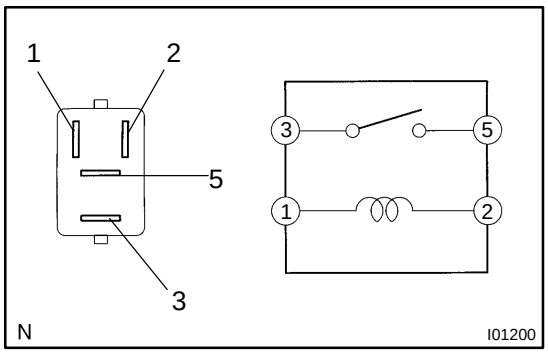

2. INSPECT MIRROR HEATER RELAY (Marking : MIR HTR) CONTINUITY

Condition	Tester connection	Specified condition
Constant	1 – 2	Continuity
Apply B+ between terminals 1 and 2	3 – 5	Continuity

If the continuity is not as specified, replace the relay.

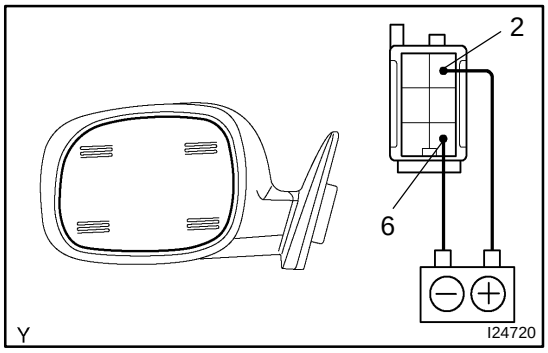

3. INSPECT MIRROR HEATER OPERATION

(a) Connect the positive (+) lead from the battery to terminal 2 and the negative (–) lead to terminal 6.

(b) Check that the mirror becomes warm.

HINT:

It will take a short time for the mirror to become warm.

If the operation is not as specified, replace the mirror.

POWER WINDOW CONTROL SYSTEM

LOCATION

BE03O–05

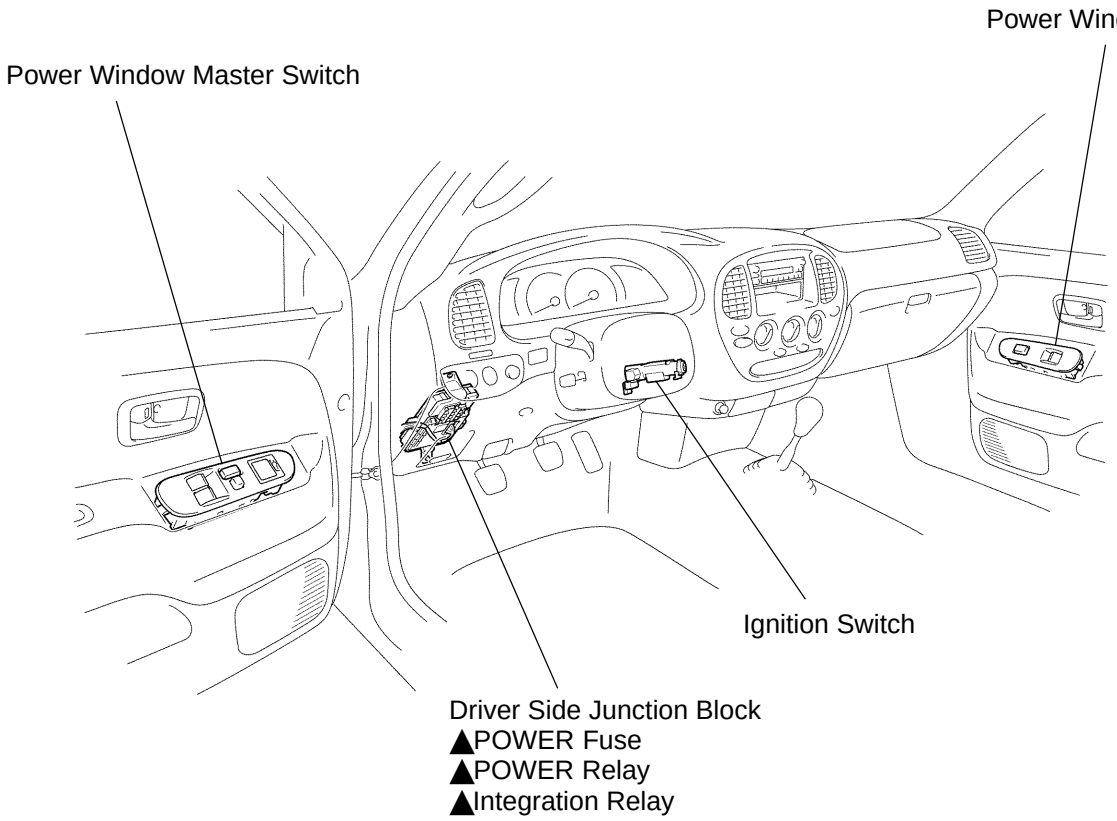

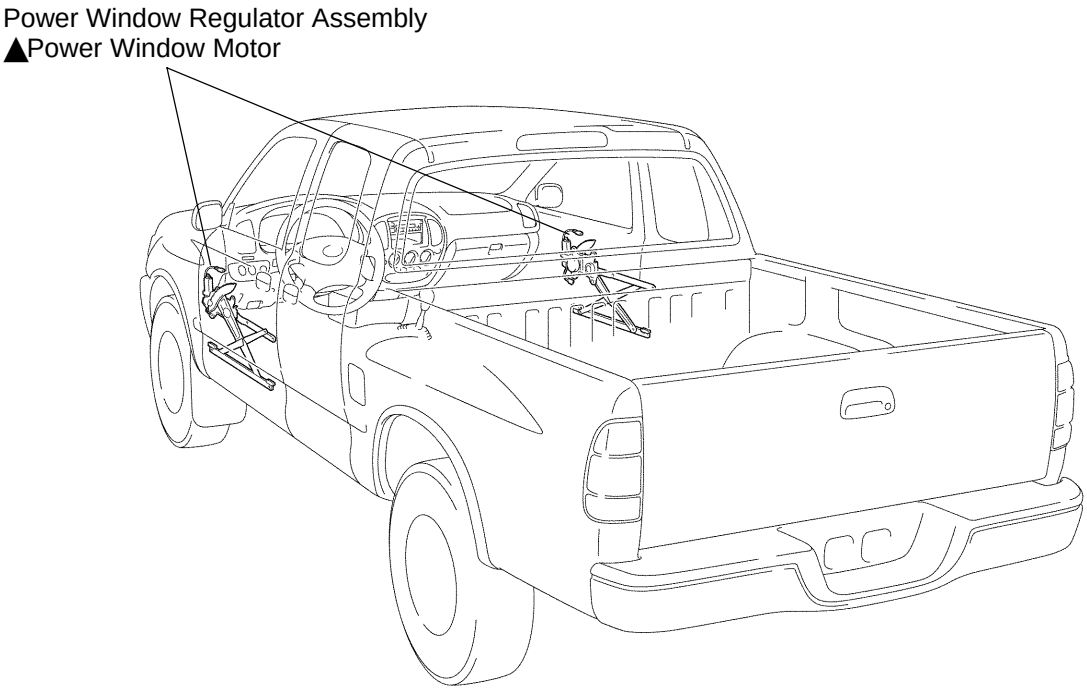

P

I25443

BE2CJ–01

INSPECTION

1. INSPECT POWER WINDOW MASTER SWITCH CONTINUITY

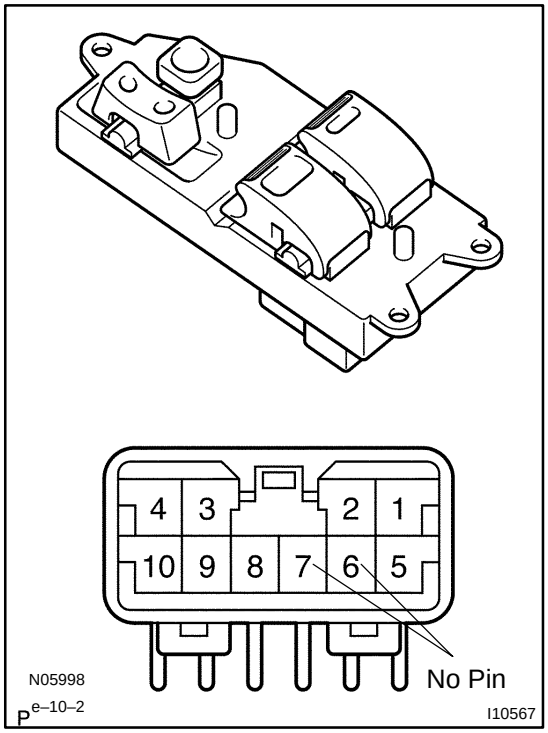

Driver's switch:

Switch position	Tester connection	Specified condition
UP	1 – 4, 3 – 9	Continuity
OFF	1 – 3 – 4	Continuity
DOWN (AUTO)	1– 3, 4 – 9	Continuity

Passenger's switch: Window unlock

Switch position	Tester connection	Specified condition
UP	1 – 10, 8 – 9	Continuity
OFF	1 – 8 – 10	Continuity
DOWN	1 – 8, 9 – 10	Continuity

Passenger's switch: Window lock

Switch position	Tester connection	Specified condition
UP	8 – 9	Continuity
OFF	8 – 10	Continuity
DOWN	9 – 10	Continuity

If the continuity is not as specified, replace the switch.

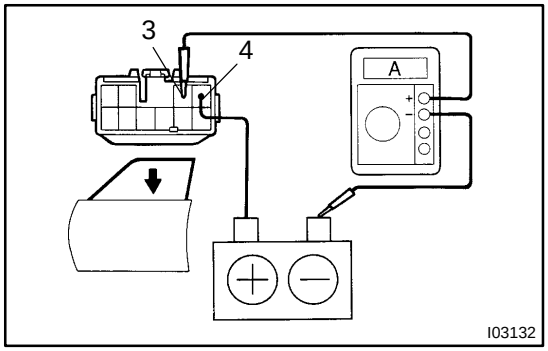

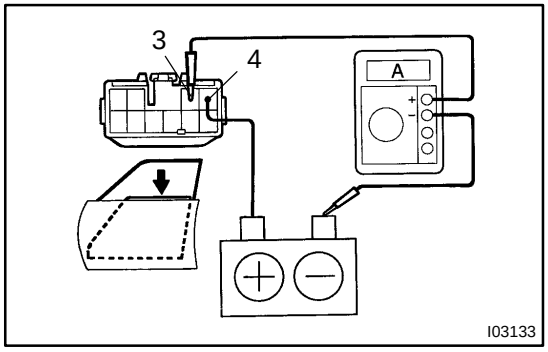

2. INSPECT ONE–TOUCH POWER WINDOW SYSTEM CURRENT OF CIRCUIT (Using an ammeter)

(a) Disconnect the connector from the master switch.
(b) Connect the positive (+) lead from the ammeter to terminal 3 on the wire harness side connector and the negative (–) lead to the negative (–) terminal of the battery.
(c) Connect the positive (+) lead from the battery to terminal 4 on the wire harness side connector.
(d) When the window goes down, check that the current is approximately 7 A.
(e) Check that the current increases to approximately 14.5 A or more when the window stops going down.

HINT:
Since the circuit breaker opens in 4 – 40 seconds after the window stops going down, the check must be performed before the circuit breaker starts operating
If the result is not as specified, replace the switch.

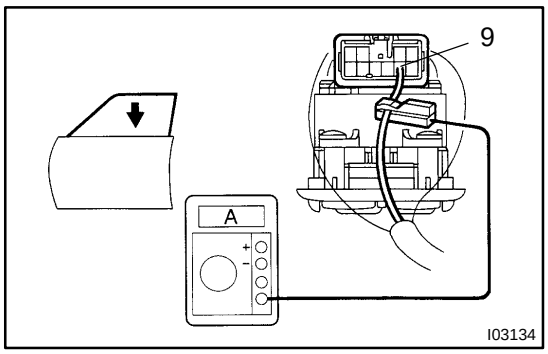

3. INSPECT ONE–TOUCH POWER WINDOW SYSTEM/ CURRENT OF CIRCUIT (Using an ammeter with a current–measuring probe)

(a) Remove the master switch with the connector connected.
(b) Attach a current–measuring probe to terminal 9 of the wire harness side connector.
(c) Turn the ignition switch ON and set the power window switch in the down position.
(d) When the window goes down, check that the current is approximately 7 A.
(e) Check that the current increases to approximately 14.5 A or more when the window stops going down.

HINT:
Since the circuit breaker opens in 4 – 40 seconds after the window stops going down, the check must be performed before the circuit breaker starts operating.
If the result is not as specified, replace the master switch.

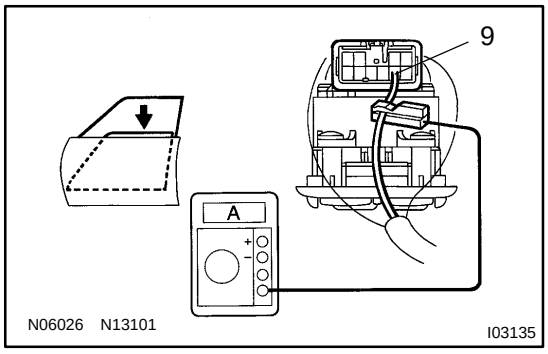

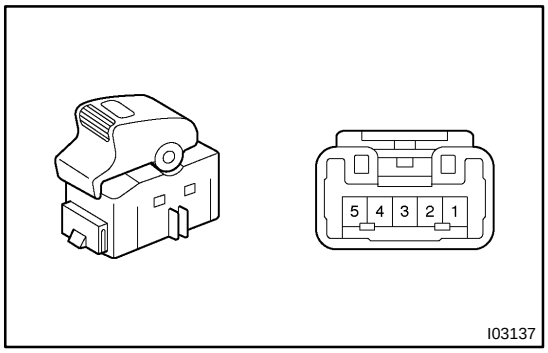

4. INSPECT POWER WINDOW CONTROL SWITCH CONTINUITY

Switch position	Tester connection	Specified condition
UP	1 – 2, 3 – 4	Continuity
OFF	1 – 2, 3 – 5	Continuity
DOWN	1 – 4, 3 – 5	Continuity

If the continuity is not as specified, replace the switch.

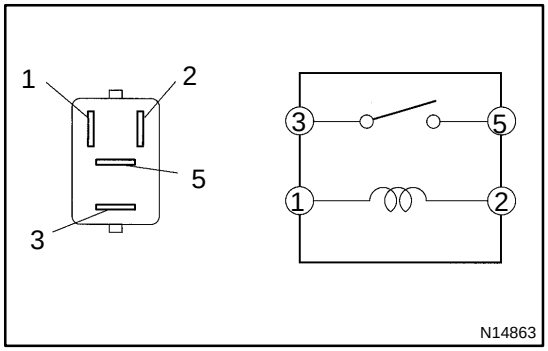

5. INSPECT POWER RELAY CONTINUITY

Condition	Tester connection	Specified condition
Constant	1 – 2	Continuity
Apply B+ between terminals 1 and 2	3 – 5	Continuity

If the continuity is not as specified, replace the switch.

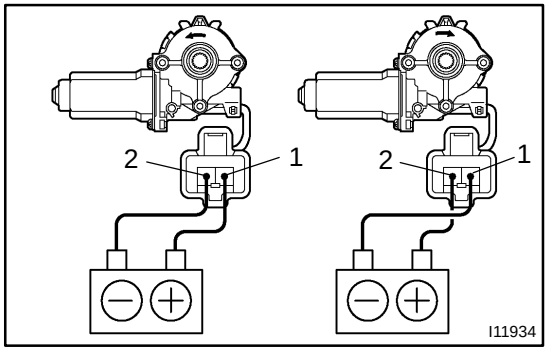

6. Driver side door:
INSPECT POWER WINDOW MOTOR OPERATION

(a) Connect the positive (+) lead from the battery to terminal 1 and the negative (–) lead to terminal 2, and check that the motor turns counterclockwise.
(b) Reverse the polarity, and check that the motor turns clockwise.

If the operation is not as specified, replace the motor.

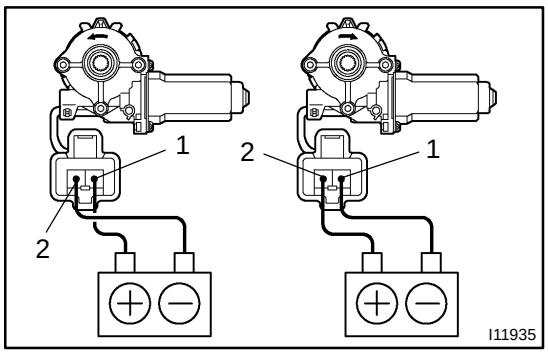

7. Passenger side door:
INSPECT POWER WINDOW MOTOR OPERATION

(a) Connect the positive (+) lead from the battery to terminal 1 and the negative (–) lead to terminal 2, and check that the motor turns counterclockwise.

(b) Reverse the polarity, and check that the motor turns clockwise.

If the operation is not as specified, replace the motor.

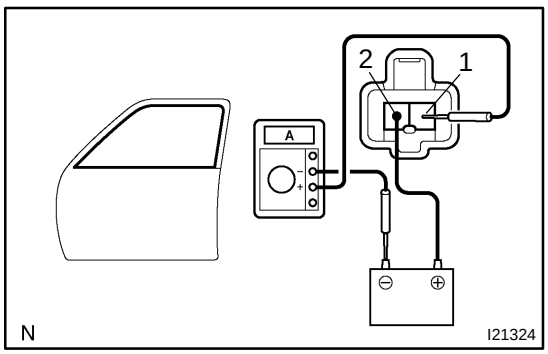

8. Driver side door:
INSPECT POWER WINDOW MOTOR PTC THERMISTOR OPERATION

(a) Disconnect the connector from the power window motor.

(b) Connect the positive (+) lead from the ammeter to terminal 1 on the wire harness side connector and the negative (–) lead to the negative terminal of the battery.

(c) Connect the positive (+) lead from the battery to terminal 2 on the wire harness side connector, and raise the window to the fully closed position.

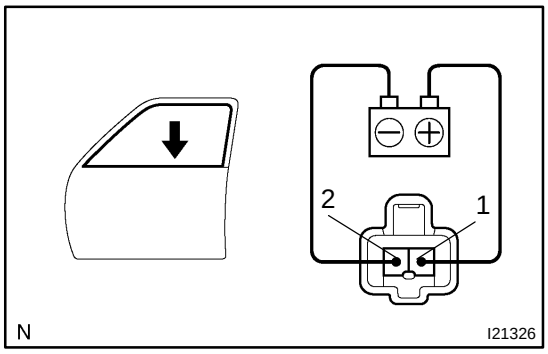

(d) Continue to apply voltage, and check that the current changes to less than 1 A in 4 to 90 seconds.

(e) Disconnect the leads from the terminals.

(f) Approximately 60 seconds later, connect the positive (+) lead from the battery to terminal 1 and the negative (–) lead to terminal 2, and check that the window begins to descend.

If the operation is not as specified, replace the motor.

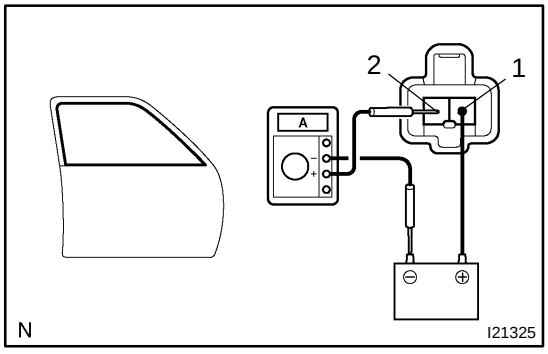

9. Passenger side door:
INSPECT POWER WINDOW MOTOR PTC THERMISTOR OPERATION

(a) Disconnect the connector from the power window motor.

(b) Connect the positive (+) lead from the ammeter to terminal 2 on the wire harness side connector and the negative (–) lead to the negative terminal of the battery.

(c) Connect the positive (+) lead from the battery to terminal 1 on the wire harness side connector, and raise the window to the fully close position.

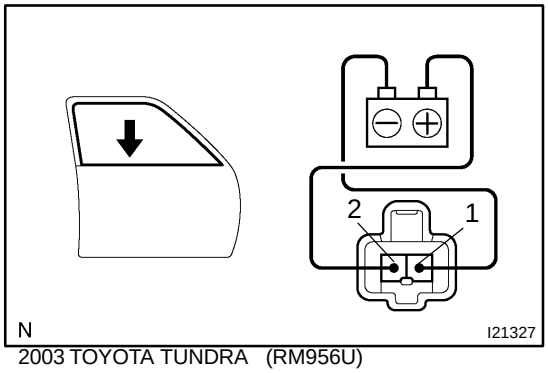

(d) Continue to apply voltage and check that the current changes to less than 1 A in 4 to 90 seconds.

(e) Disconnect the leads from the terminals.

(f) Approximately 60 seconds later, connect the positive (+) lead from the battery to terminal 2 and the negative (–) lead to terminal 1, and check that the window begins to descend.

If the operation is not as specified, replace the motor.

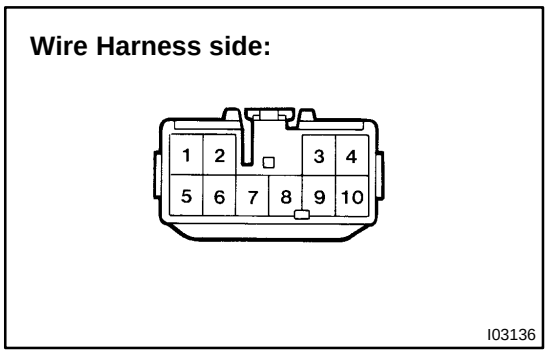

10. CHECK POWER WINDOW MASTER SWITCH CIRCUIT

Disconnect the connector from the master switch and check the connector on the wire harness side.

Tester connection	Condition	Specified condition
1 – Ground	Constant	Continuity
3 – 4	Constant	Continuity
8 – 10	Power window master switch OFF	Continuity
8 – 10	Power window master switch UP or DOWN	Continuity
9 – Ground	Constant	Battery positive voltage

If the result is not as specified, inspect the circuits connected to other parts.

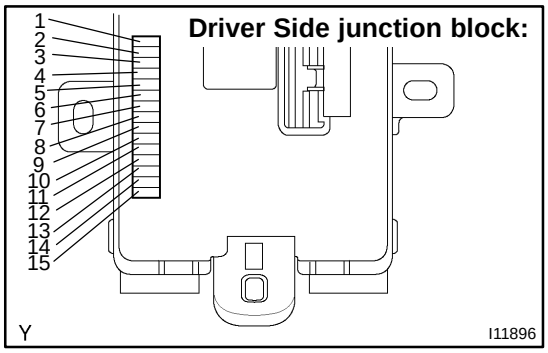

11. CHECK INTEGRATION RELAY

Remove the integration relay from the driver side junction block, and check the voltage or continuity of each terminal on the junction block side. (See page BE–71)

POWER SLIDE BACK WINDOW SYSTEM

BE2CT–01

LOCATION

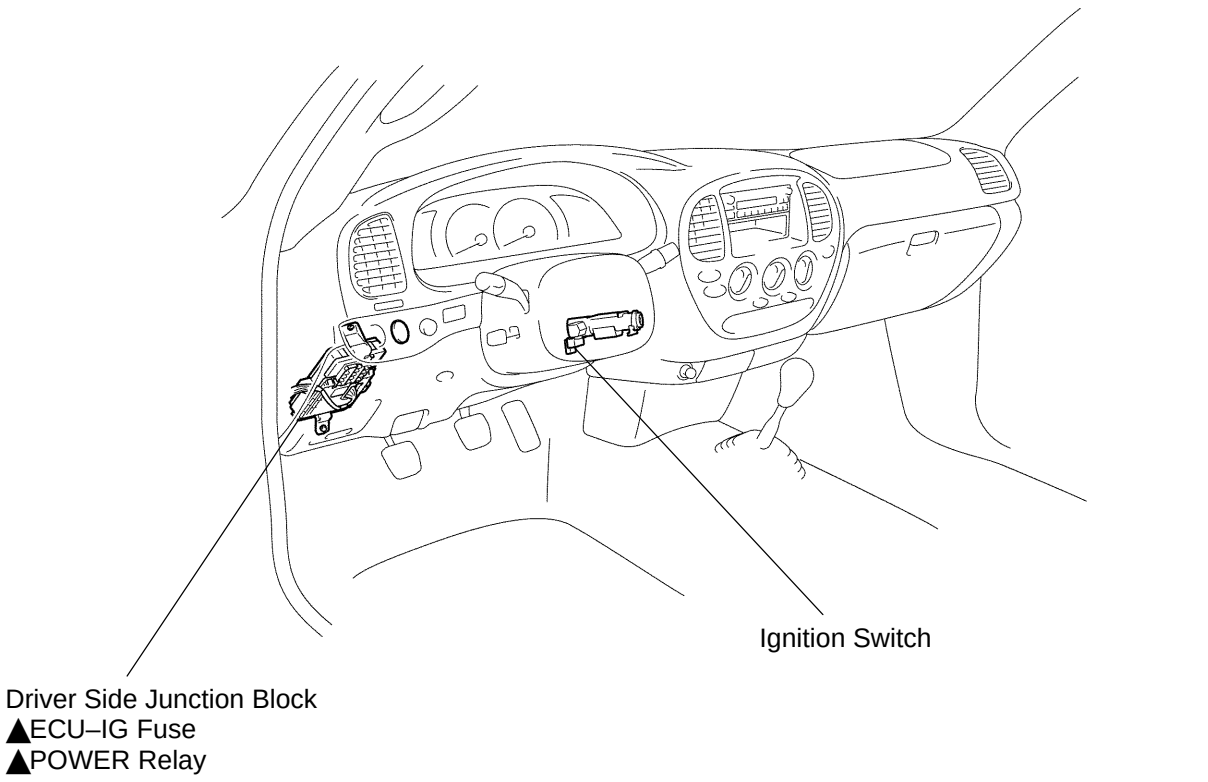

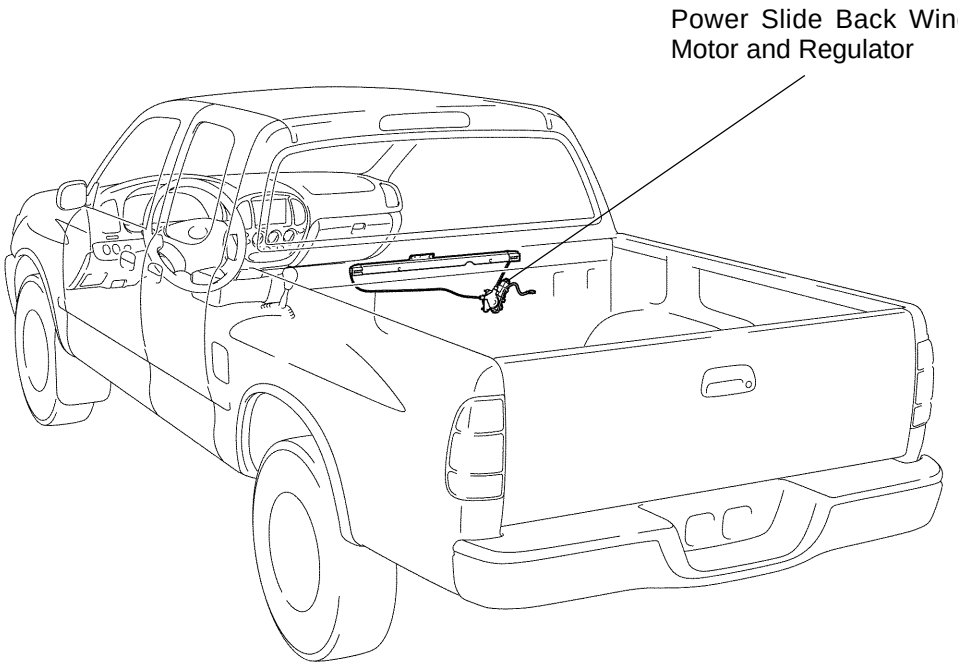

P

I25442

BE2CK–01

INSPECTION

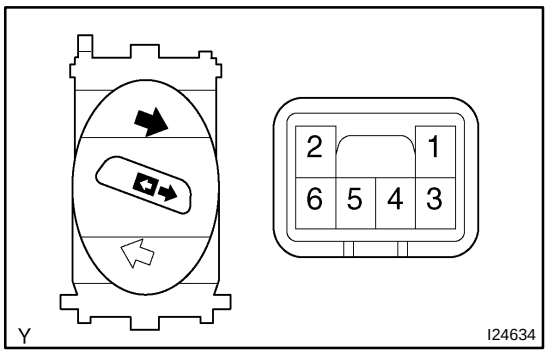

1. INSPECT POWER SLIDE BACK WINDOW SWITCH CONTINUITY

Switch position	Tester connection	Specified condition
OPEN	1 – 3, 2 – 6	Continuity
OFF	2 – 3, 2 – 6	Continuity
CLOSE	1 – 6, 2 – 3	Continuity

If the continuity is not as specified, replace the switch.

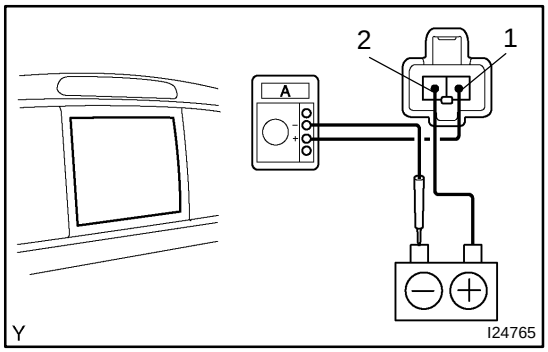

2. CHECK POWER SLIDE BACK WINDOW MOTOR PTC THERMISTOR OPERATION

(a) Disconnect the connector from the window motor.
(b) Connect the positive (+) lead from the ammeter to terminal 1 on the wire harness side connector and the negative (–) lead to the negative terminal of the battery.
(c) Connect the positive (+) lead from the battery to terminal 2 on the wire harness side connector, and slide the window to the fully closed position.

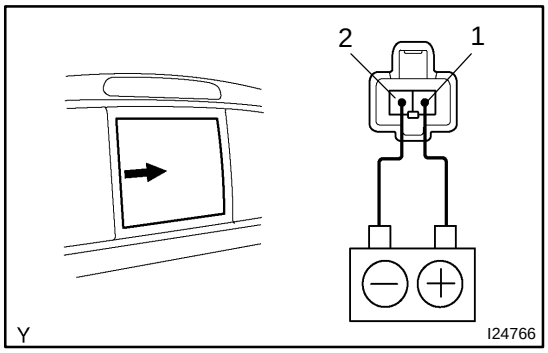

(d) Continue to apply voltage and check that the current changes to less than 1 A in 4 to 90 seconds.
(e) Disconnect the leads from the terminals.
(f) Approximately 60 seconds later, connect the positive (+) lead from the battery to terminal 1 and the negative (–) lead to terminal 2, and check that the window begins to slide open.

If the operation is not as specified, replace the motor and regulator together.

3. INSPECT POWER RELAY CONTINUITY

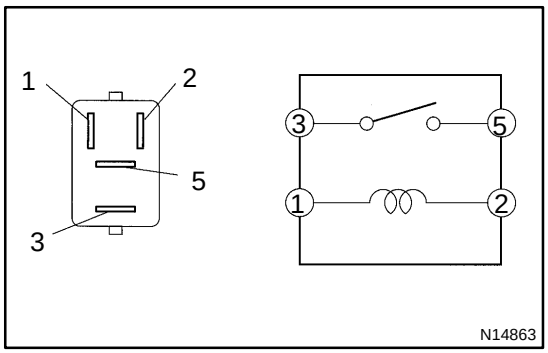

Condition	Tester connection	Specified condition
Constant	1 – 2	Continuity
Apply B+ between terminals 1 and 2.	3 – 5	Continuity

If the continuity is not as specified, replace the switch.

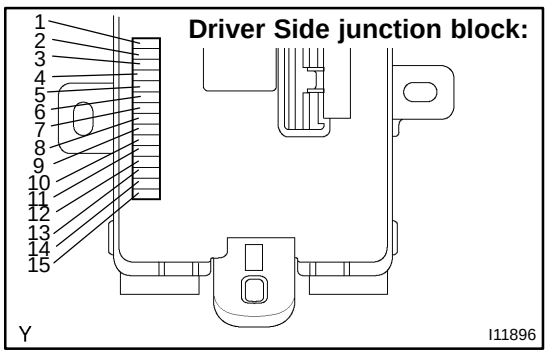

4. CHECK INTEGRATION RELAY

Remove the integration relay from the driver side junction block, and check the voltage or continuity of each terminal on the junction block side. (See page BE–71)

POWER DOOR LOCK CONTROL SYSTEM

BE03I–04

LOCATION

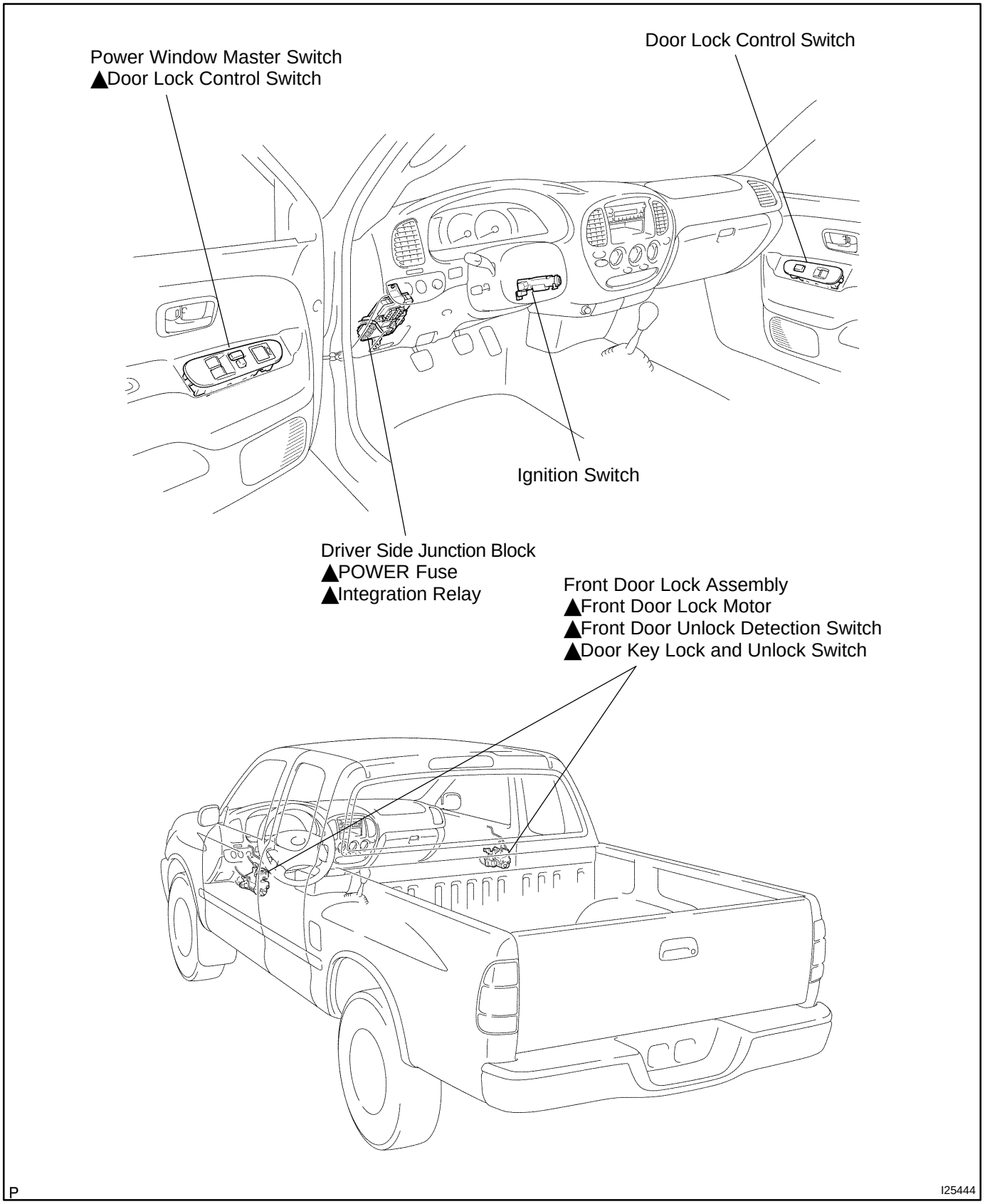

BE2CL–01

INSPECTION

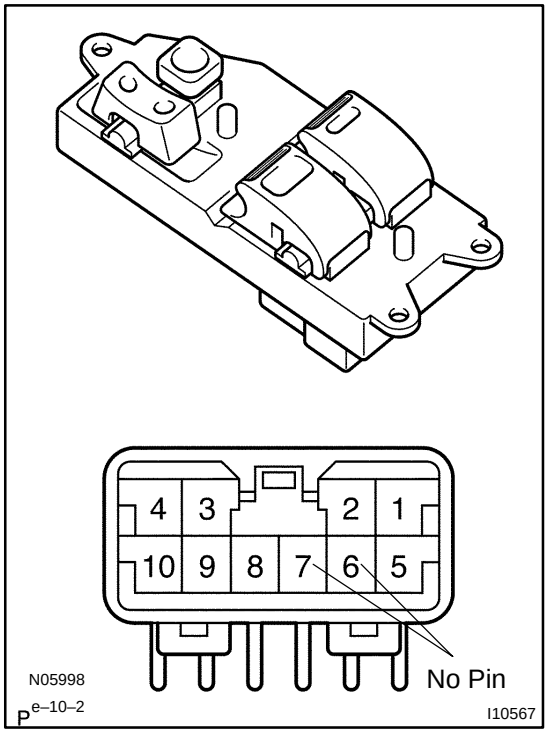

1. Driver side:
INSPECT DOOR LOCK CONTROL SWITCH (POWER WINDOW MASTER SWITCH) CONTINUITY

Switch position	Tester connection	Specified condition
LOCK	1 – 2	Continuity
OFF	1 – 2, 1 – 5	No continuity
UNLOCK	1 – 5	Continuity

If the continuity is not as specified, replace the switch.

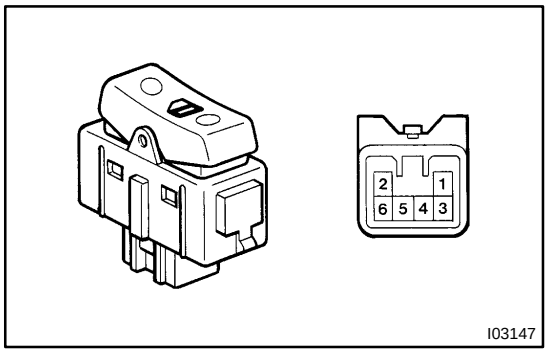

2. Passenger side:
INSPECT DOOR LOCK CONTROL SWITCH CONTINUITY

Switch position	Tester connection	Specified condition
LOCK	3 – 6	Continuity
OFF	3 – 5, 3 – 6	No continuity
UNLOCK	3 – 5	Continuity

If the continuity is not as specified, replace the switch.

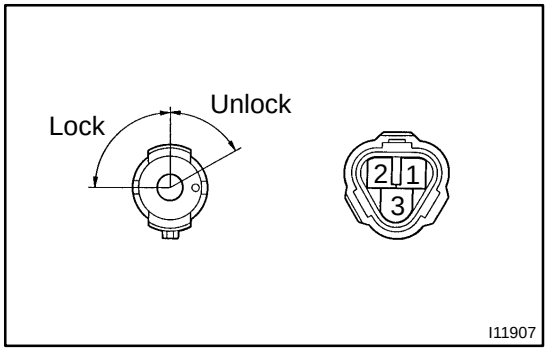

3. INSPECT DOOR KEY LOCK AND UNLOCK SWITCH CONTINUITY

Switch position	Tester connection	Specified condition
LOCK	1 – 2	Continuity
OFF	1 – 2, 2 – 3	No continuity
UNLOCK	2 – 3	Continuity

If the continuity is not as specified, replace the switch.

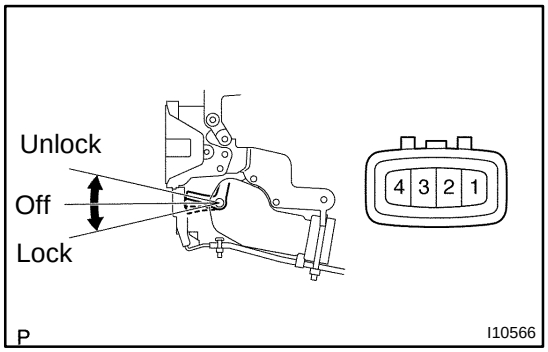

4. INSPECT DOOR UNLOCK DETECTION SWITCH CONTINUITY

Switch position	Tester connection	Specified condition
OFF (Door Lock set to LOCK)	1 – 4	No continuity
ON (Door Lock set to UNLOCK)	1 – 4	Continuity

If the continuity is not as specified, replace the switch.

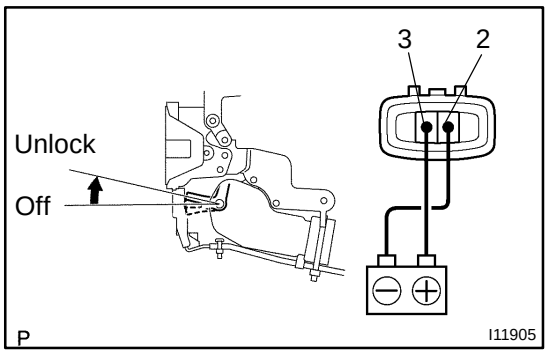

5. INSPECT DOOR KEY LOCK MOTOR OPERATION

(a) Connect the positive (+) lead from the battery to terminal 3 and the negative (–) lead to terminal 2, and check that the door lock link moves to the UNLOCK position.

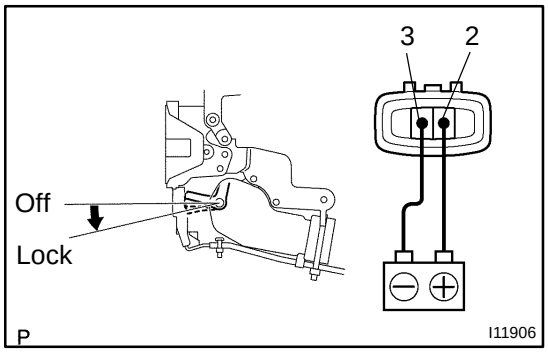

(b) Reverse the polarity and check that the door lock link moves to the LOCK position.

If the operation is not as specified, replace the door lock assembly.

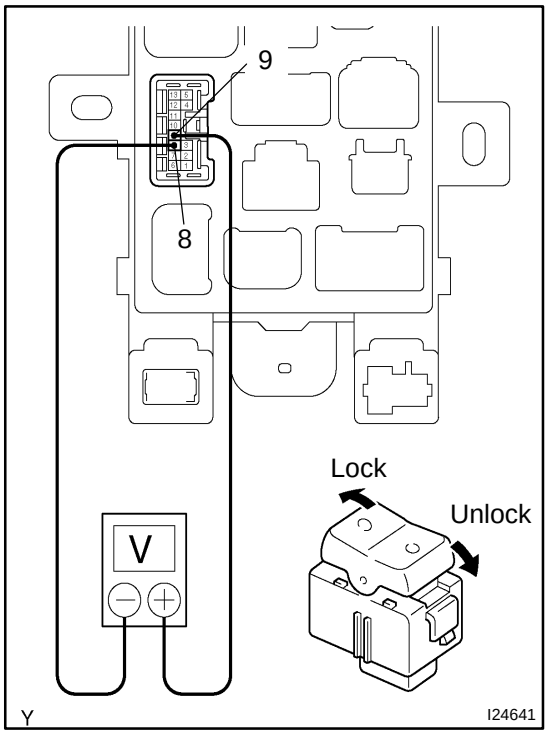

6. Door lock signal:
INSPECT DOOR LOCK CONTROL OPERATION

(a) Disconnect the connector from the driver side junction block.

(b) Connect the positive (+) lead from the voltmeter to terminal 9 and the negative (–) lead to terminal 8.

(c) Set the door lock control switch to UNLOCK, check that the voltage rises from 0 V to battery positive voltage for approximately 0.25 second.

(d) Reverse the polarity.

(e) Set the door lock control switch to LOCK, check that the voltage rises from 0 V to battery voltage for approximately 0.25 seconds.

7. w/ Daytime running light:
CHECK INTEGRATION RELAY (DRIVER SIDE JUNCTION BLOCK) CIRCUIT

(a) Disconnect the 1H, 1I,1J, 1K and 1N driver side junction block connectors, and check the voltage or continuity of each terminal of the wire harness side connectors.

Driver Side Junction Block:

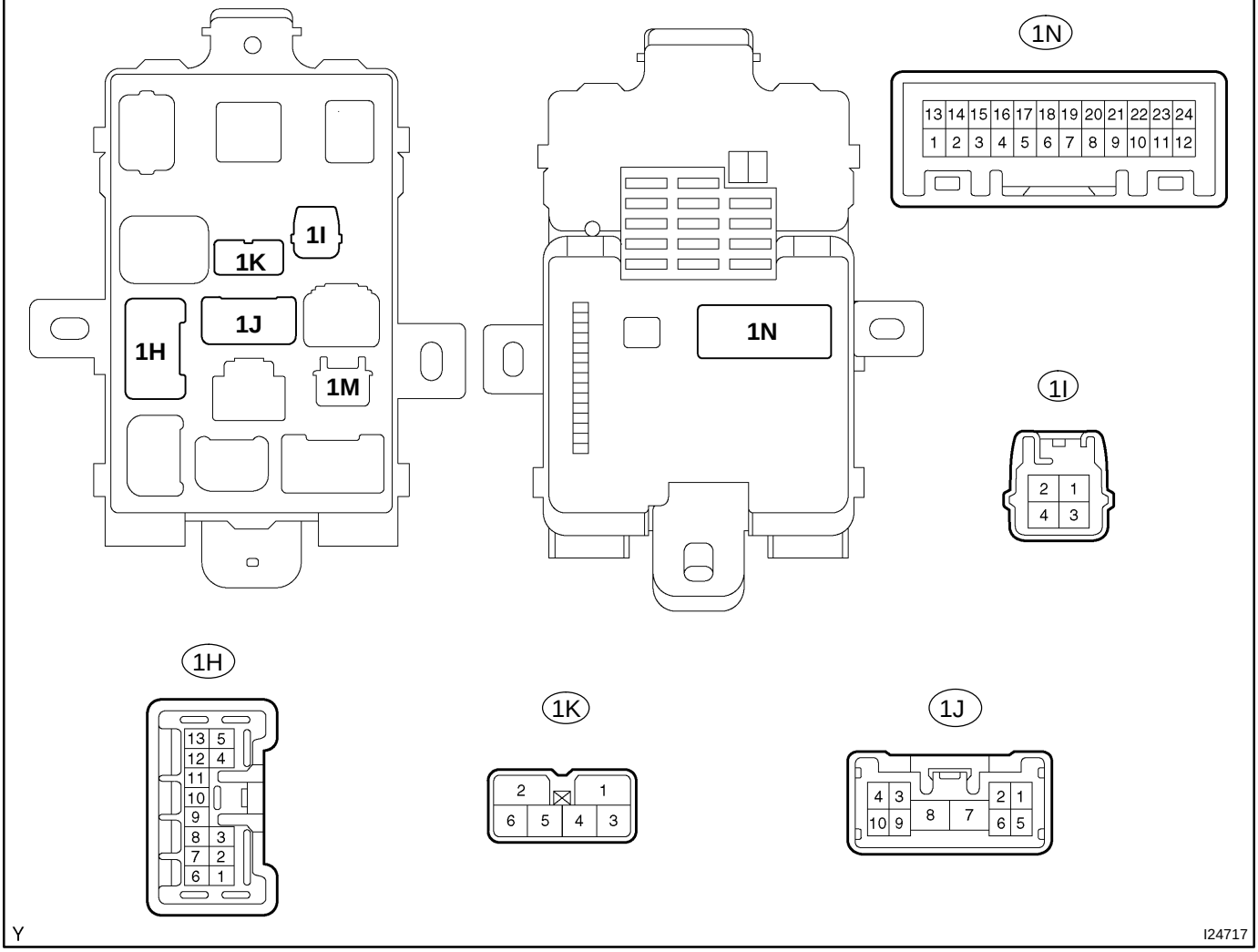

Tester connection	Condition	Specified condition
1H–6 – Body ground	Passenger's door opened	Continuity
1H–6 – Body ground	Passenger's door closed	No continuity
1H–7 – Body ground	Driver's door opened	Continuity
1H–7 – Body ground	Driver's door closed	No continuity
1I–2 – Body ground	Ignition switch LOCK or ACC	No voltage
1I–2 – Body ground	Ignition switch ON or START	Battery voltage
1J–8 – Body ground	Constant	Continuity
1K–2 – Body ground	Constant	Battery voltage

Tester connection	Condition	Specified condition
1N–5 – Body ground	Cargo light switch OFF	No continuity
1N–5 – Body ground	Cargo light switch ON	Continuity
1N–6 – Body ground	Key unlock warning switch OFF (Ignition key removed)	No continuity
1N–6 – Body ground	Key unlock warning switch ON (Ignition key inserted)	Continuity
1N–9 – Body ground	Driver's door unlock detection switch OFF	No continuity
1N–9 – Body ground	Driver's door unlock detection switch ON	Continuity
1N–10 – Body ground	Passenger's door unlock detection switch OFF	No continuity
1N–10 – Body ground	Passenger's door unlock detection switch ON	Continuity
1N–19 – Body ground	Door lock manual switch and door lock control switch LOCK	Continuity
1N–19 – Body ground	Door lock manual switch and door lock control switch OFF or UNLOCK	No continuity
1N–20 – Body ground	Door key lock and unlock switch LOCK	Continuity
1N–20 – Body ground	Door key lock and unlock switch OFF or UN-LOCK	No continuity
1N–21 – Body ground	Door lock manual switch or door lock control switch UNLOCK	Continuity
1N–21 – Body ground	Door lock manual switch and door lock control switch OFF or LOCK	No continuity
1N–22 – Body ground	Front passenger's door key lock and unlock switch UNLOCK	Continuity
1N–22 – Body ground	Front passenger's door key lock and unlock switch LOCK or OFF	No continuity
1N–23 – Body ground	Driver's door key lock and unlock switch UN-LOCK	Continuity
1N–23 – Body ground	Driver's door key lock and unlock switch LOCK or OFF	No continuity
1N–24 – Body ground	Constant	Continuity

If the result is not as specified, there may be a malfunction on the wire harness side.

If the result is not as specified, the integration relay (junction block) may malfunction

(b) Reconnect the 1H, 1I,1J, 1K and 1N junction block connectors, and check the voltage of each terminal of the connectors.

Tester connection	Condition	Specified condition
1H–8 – Body ground	Door lock manual switch LOCK or UNLOCK	0 V → 10 – 14 V → 1 V or less
1H–9 – Body ground	Door lock manual switch LOCK or UNLOCK	0 V → 10 – 14 V → 1 V or less

If the result is not as specified, the integration relay (junction block) may malfunction

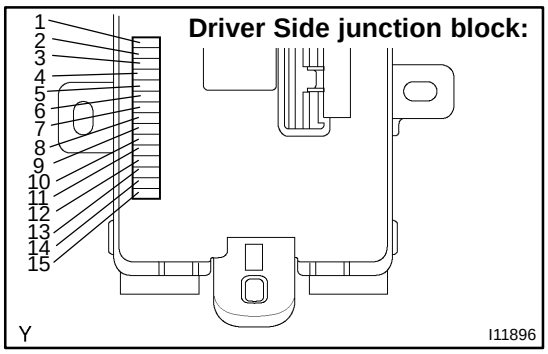

(c) Remove the integration relay from the driver side junction block, and check the voltage or continuity on each terminal of the junction block side.

Tester connection	Condition	Specified condition
1 – Body ground	Constant	Continuity
2 – Body ground	Constant	Continuity
3 – Body ground	Constant	Battery voltage
4 – Body ground	Constant	Continuity
5 – Body ground	Constant	Battery voltage
6 – Body ground	Constant	Battery voltage
7 – Body ground	Constant	Battery voltage
8 – Body ground	Constant	Continuity
10 – Body ground	Ignition switch ON	Battery voltage
11 – Body ground	Constant	Continuity
12 – Body ground	Constant	No continuity
13 – Body ground	Constant	No continuity
14 – Body ground	Left door courtesy switch OFF (Door closed)	No continuity
14 – Body ground	Left door courtesy switch ON (Door opened)	Continuity
15 – Body ground	Right door courtesy switch OFF (Door closed)	No continuity
15 – Body ground	Right door courtesy switch OFF (Door opened)	Continuity

If the result is not as specified, replace the driver side junction block.

8. w/o Daytime running light:
CHECK INTEGRATION RELAY (DRIVER SIDE JUNCTION BLOCK) CIRCUIT

(a) Disconnect the 1H, 1I, 1K, 1J and 1L driver side junction block connectors, and check the voltage or continuity of each terminal of the wire harness side connectors.

Driver Side Junction Block:

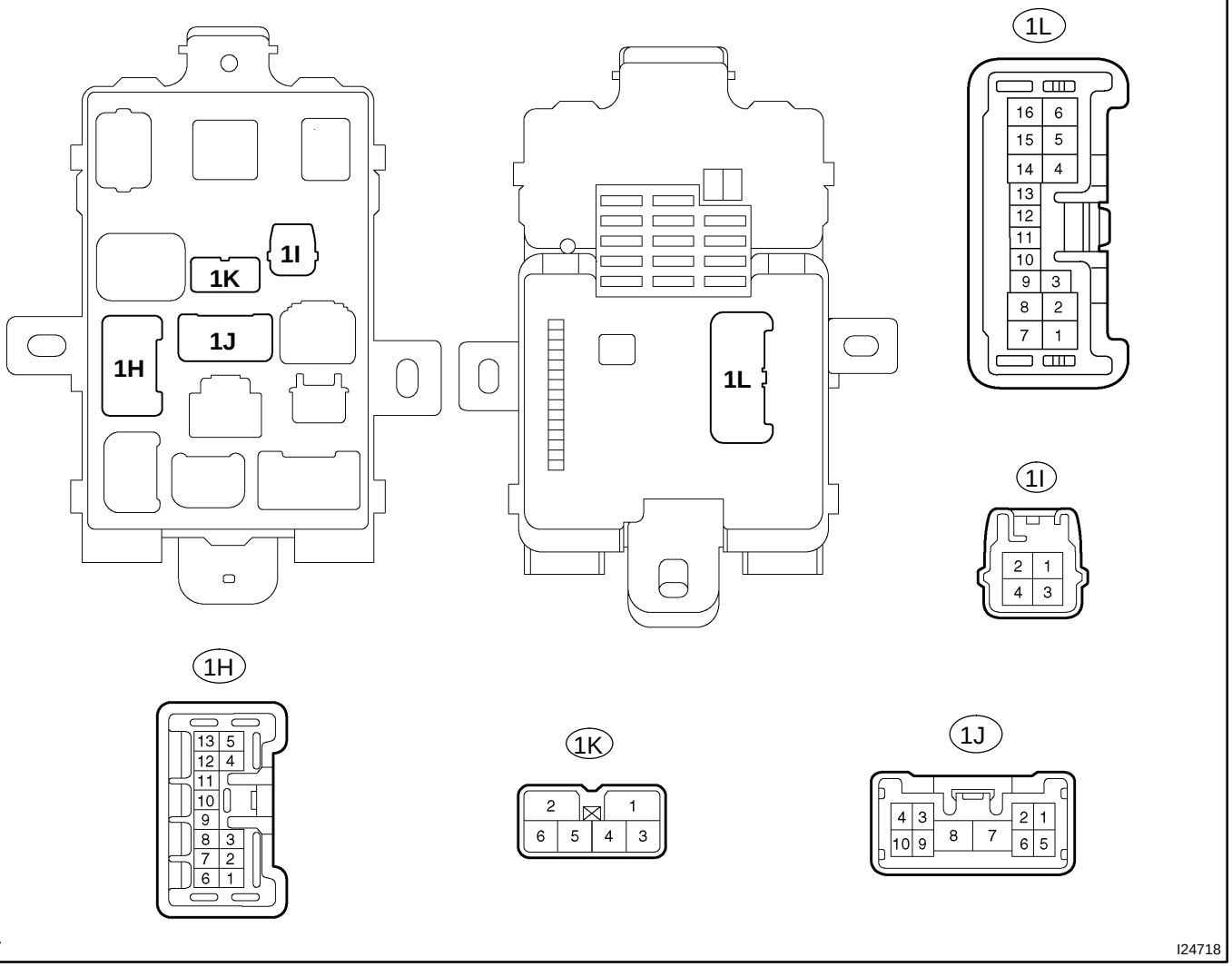

Tester connection	Condition	Specified condition
1H–6 – Body ground	Passenger's door opened	Continuity
1H–6 – Body ground	Passenger's door closed	No continuity
1H–7 – Body ground	Driver's door opened	Continuity
1H–7 – Body ground	Driver's door closed	No continuity
1I–2 – Body ground	Ignition switch LOCK or ACC	No voltage
1I–2 – Body ground	Ignition switch ON or START	Battery voltage
1J–8 – Body ground	Constant	Continuity
1K–2 – Body ground	Constant	Battery voltage

Tester connection	Condition	Specified condition
1L–1 – Body ground	Door lock manual switch, door lock control switch or door key lock and unlock switch LOCK	Continuity
1L–1 – Body ground	Door lock manual switch and door lock control switch and door key lock and unlock switch OFF or UNLOCK	No continuity
1L–2 – Body ground	Door lock manual switch, door lock control switch or front passenger's door key lock and unlock switch UNLOCK	Continuity
1L–2 – Body ground	Door lock manual switch, door lock control switch and front passenger's door key lock and unlock switch OFF or LOCK	No continuity
1L–3 – Body ground	Driver's door key lock and unlock switch UN-LOCK	Continuity
1L–3 – Body ground	Driver's door key lock and unlock switch LOCK or OFF	No continuity
1L–6 – Body ground	Key unlock warning switch OFF (Ignition key removed)	No continuity
1L–6 – Body ground	Key unlock warning switch ON (Ignition key inserted)	Continuity
1L–8 – Body ground	Passenger's door unlock detection switch OFF	No continuity
1L–8 – Body ground	Passenger's door unlock detection switch ON	Continuity
1L–9 – Body ground	Driver's door unlock detection switch OFF	No continuity
1L–9 – Body ground	Driver's door unlock detection switch ON	Continuity
1L–10 – Body ground	Cargo light switch OFF	No continuity
1L–10 – Body ground	Cargo light switch ON	Continuity
1L–16 – Body ground	Constant	Continuity

If the result is not as specified, there may be a malfunction on the wire harness side.

If the result is not as specified, the integration relay (junction block) may malfunction.

(b) Reconnect the 1H, 1I, 1K, 1J and 1N junction block connectors, and check the voltage of each terminal of the connectors.

Tester connection	Condition	Specified condition
1H–8 – Body ground	Door lock manual switch LOCK or UNLOCK	0 V → 10 – 14 V → 1 V or less
1H–9 – Body ground	Door lock manual switch LOCK or UNLOCK	0 V → 10 – 14 V → 1 V or less

If the result is not as specified, the integration relay (junction block) may malfunction.

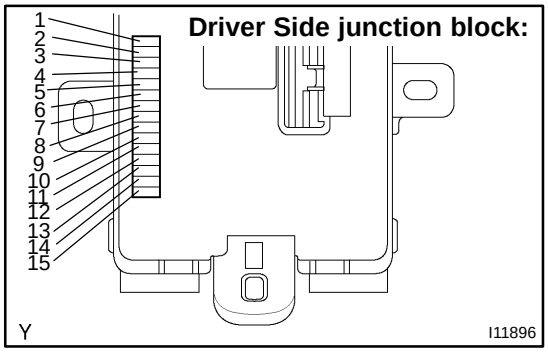

(c) Remove the integration relay from the driver side junction block, and check the voltage or continuity of each terminal on the junction block side. (See step 7. (c))

TOYOTA VEHICLE INTRUSION PROTECTION SYSTEM

BE2CM–01

ON–VEHICLE INSPECTION

1. OUTLINE OF TOYOTA VEHICLE INTRUSION PROTECTION (TVIP) SYSTEM

HINT:

The TOYOTA vehicle intrusion protection system has 2 modes; one is the active mode that is an initially set mode and another is the passive mode that can be switched ON/OFF by the specified method (See step 4).

When the TOYOTA vehicle intrusion protection system detects any theft, the system will cause the horns to sound and the lights to flash in order to alert the people around the vehicle to the theft.

HINT:

Each mode (active and passive) has 4 states; disarmed state, arming preparation state, armed state and alarm sounding state.

(1) Disarmed state:
- ◀ The user is near the vehicle.
- ◀ The alarming function does not operate.
- ◀ The theft deterrent function does not operate.

(2) Arming preparation state:
- ◀ Time from the user locks a door to leave the vehicle.
- ◀ Time for transferring to the armed state.
- ◀ The theft deterrent function does not operate.

(3) Armed state:
- ◀ The user leaves the vehicle completely.
- ◀ The theft deterrent function operates.

(4) Alarm sounding state:

Once a theft is detected in the armed state, the system will cause the horns to sound and the lights to flash in order to alert the people around the vehicle to the theft.

Refer to the table for the alarming method and time.

Alarming method	Interior light	Illuminating (turn on)
	Headlight	Flashing at a cycle of approx. 0.4 sec.
	Taillight	Flashing at a cycle of approx. 0.4 sec.
	Vehicle horn	Sounding at a cycle of approx. 0.4 sec.
Alarming time	Approx. 60 sec.	

HINT:

In the alarm sounding state, when either of the front doors is unlocked and no key is inserted in the ignition key cylinder, forced door lock signal is output.

2. OPERATE ACTIVE MODE

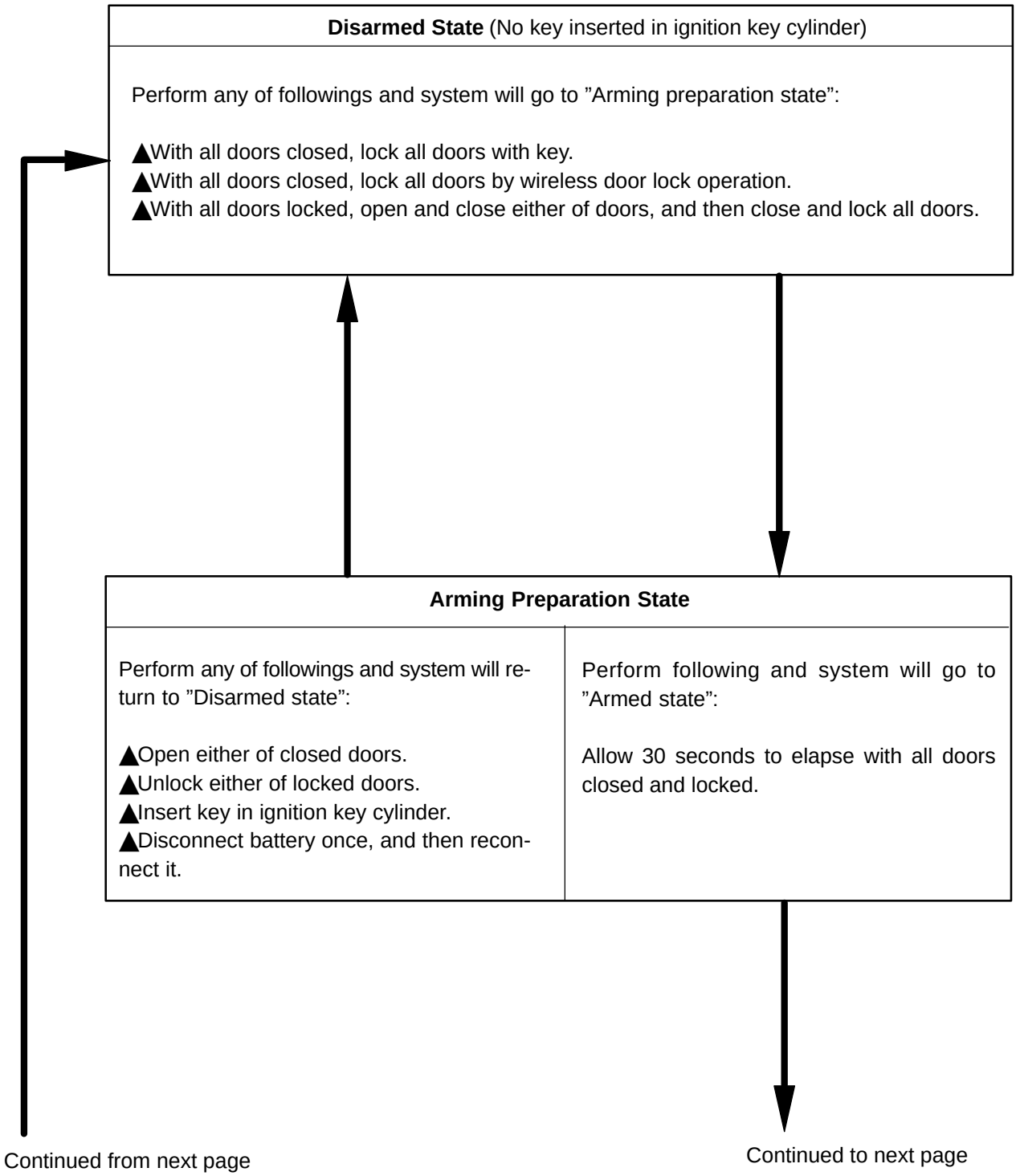

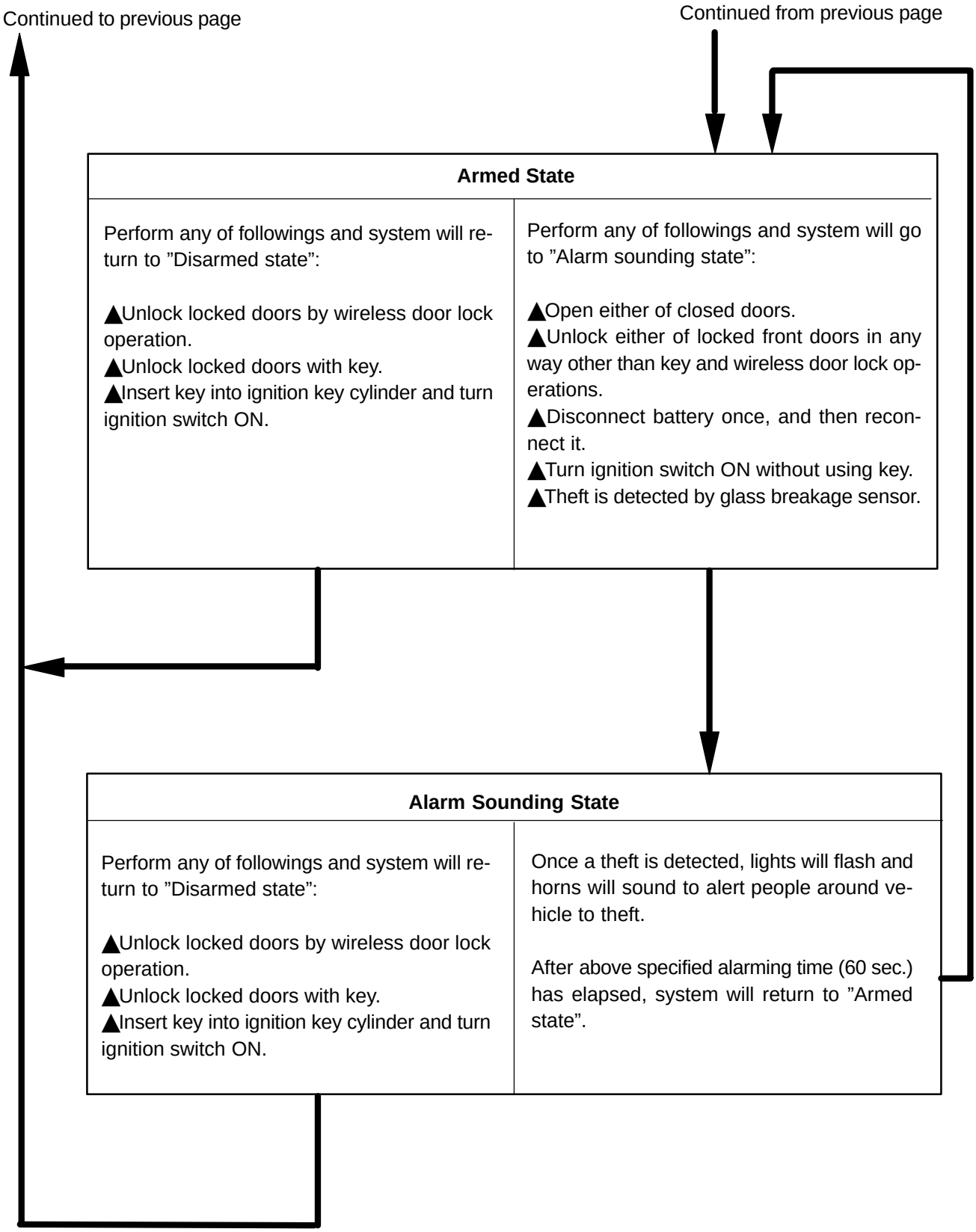
Continued to previous page
Continued from previous page
Armed State
Perform any of followings and system will return to ”Disarmed state”:
▲Unlock locked doors by wireless door lock operation.
▲Unlock locked doors with key.
▲Insert key into ignition key cylinder and turn ignition switch ON.
Perform any of followings and system will go to ”Alarm sounding state”:
▲Open either of closed doors.
▲Unlock either of locked front doors in any way other than key and wireless door lock operations.
▲Disconnect battery once, and then reconnect it.
▲Turn ignition switch ON without using key.
▲Theft is detected by glass breakage sensor.
Alarm Sounding State
Perform any of followings and system will return to ”Disarmed state”:
▲Unlock locked doors by wireless door lock operation.
▲Unlock locked doors with key.
▲Insert key into ignition key cylinder and turn ignition switch ON.
Once a theft is detected, lights will flash and horns will sound to alert people around vehicle to theft.
After above specified alarming time (60 sec.) has elapsed, system will return to ”Armed state”.

Indicator light output:

Condition	Indicator light
Disarmed state	OFF
Arming preparation state	ON
Armed state	BLINK
Alarm sounding state	ON

HINT:

Blinking frequency:

0.2 second (ON)

1.8 seconds (OFF)

3. OPERATE PASSIVE MODE

◀ This mode can be switched according to the specified method (See step 4).

◀ Initially set mode (when shipped from factory) is the active mode (No passive mode).

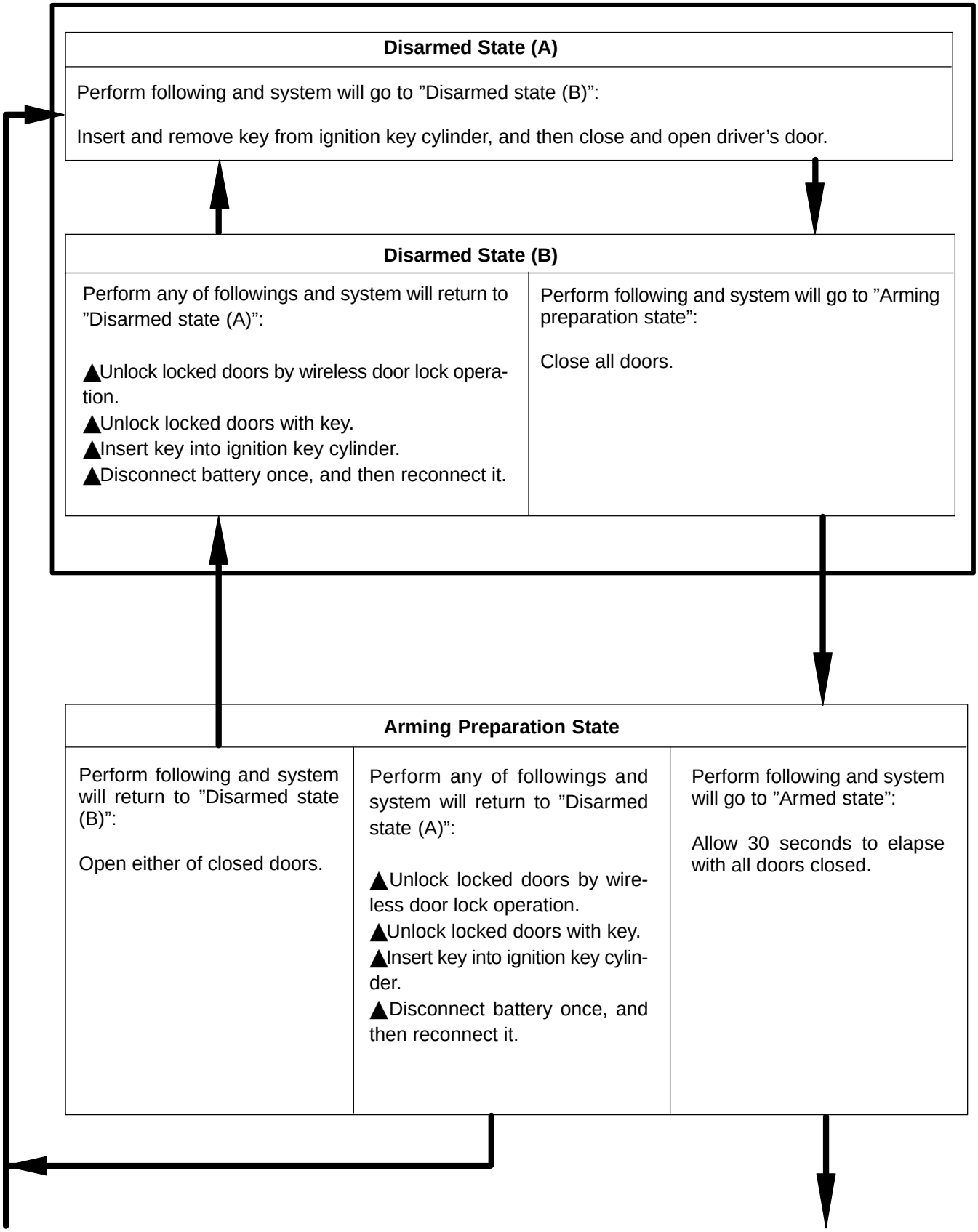

Continued from next page

Continued to next page

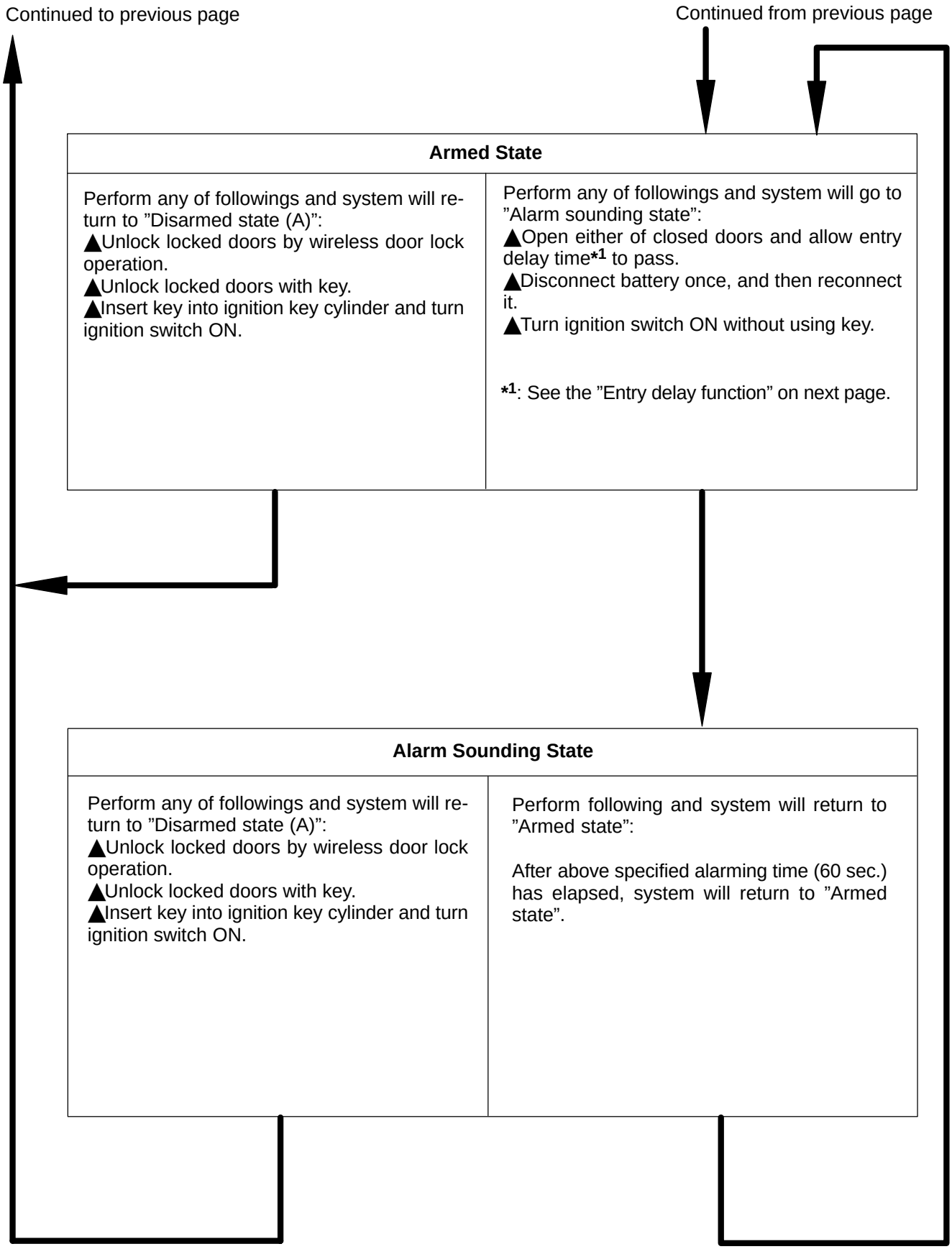
Continued to previous page
Continued from previous page
Armed State
Perform any of followings and system will return to ”Disarmed state (A)”:
▲Unlock locked doors by wireless door lock operation.
▲Unlock locked doors with key.
▲Insert key into ignition key cylinder and turn ignition switch ON.
Perform any of followings and system will go to ”Alarm sounding state”:
▲Open either of closed doors and allow entry delay time*1 to pass.
▲Disconnect battery once, and then reconnect it.
▲Turn ignition switch ON without using key.
*1: See the ”Entry delay function” on next page.
Alarm Sounding State
Perform any of followings and system will return to ”Disarmed state (A)”:
▲Unlock locked doors by wireless door lock operation.
▲Unlock locked doors with key.
▲Insert key into ignition key cylinder and turn ignition switch ON.
Perform following and system will return to ”Armed state”:
After above specified alarming time (60 sec.) has elapsed, system will return to ”Armed state”.

Entry delay function:

HINT:

In the armed state, if either closed door is opened, entry delay time will start.

If the transferring condition (Armed state → Disarmed state) is satisfied during this entry delay time, the system will transfer to the disarmed state. However, if the condition is not satisfied, the system will judge it to be a theft, and then the system will transfer to the alarm sounding state.

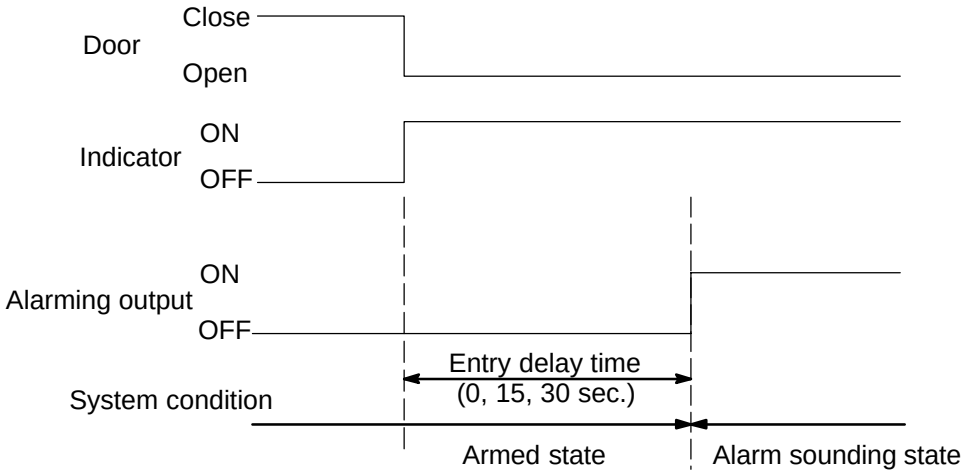

HINT:

The entry delay time can be selected among 0, 15, 30 seconds by the customizing function.

Indicator light output:

Condition	Indicator light
Disarmed state	OFF
Arming preparation state	ON
Armed state (Entry delay time)	BLINK (ON)
Alarm sounding state	ON

HINT:

Blinking frequency:

0.2 seconds (ON)

1.8 seconds (OFF)

Transfer to the active mode:

HINT:

In each state of the passive mode, when the transferring condition to the active mode (disarmed state of active mode → arming preparation state of active mode) is satisfied, the system will transfer to each state of the active mode. In this case, the active mode will continue until the system transfers to the disarmed state.

State of Passive Mode Before Transfer	State of Active Mode After Transfer
Disarmed state	Arming preparation state
Arming preparation state	Arming preparation state (continuing for 30 sec.)
Armed state (Except during entry delay time)	Armed state
Armed state (During entry delay time)	After alarming time has elapsed, the system will transfer to the armed state
Alarm sounding state	After alarming time has elapsed, the system will transfer to the armed state

4. CHANGING METHOD OF PASSIVE MODE (ON or OFF)

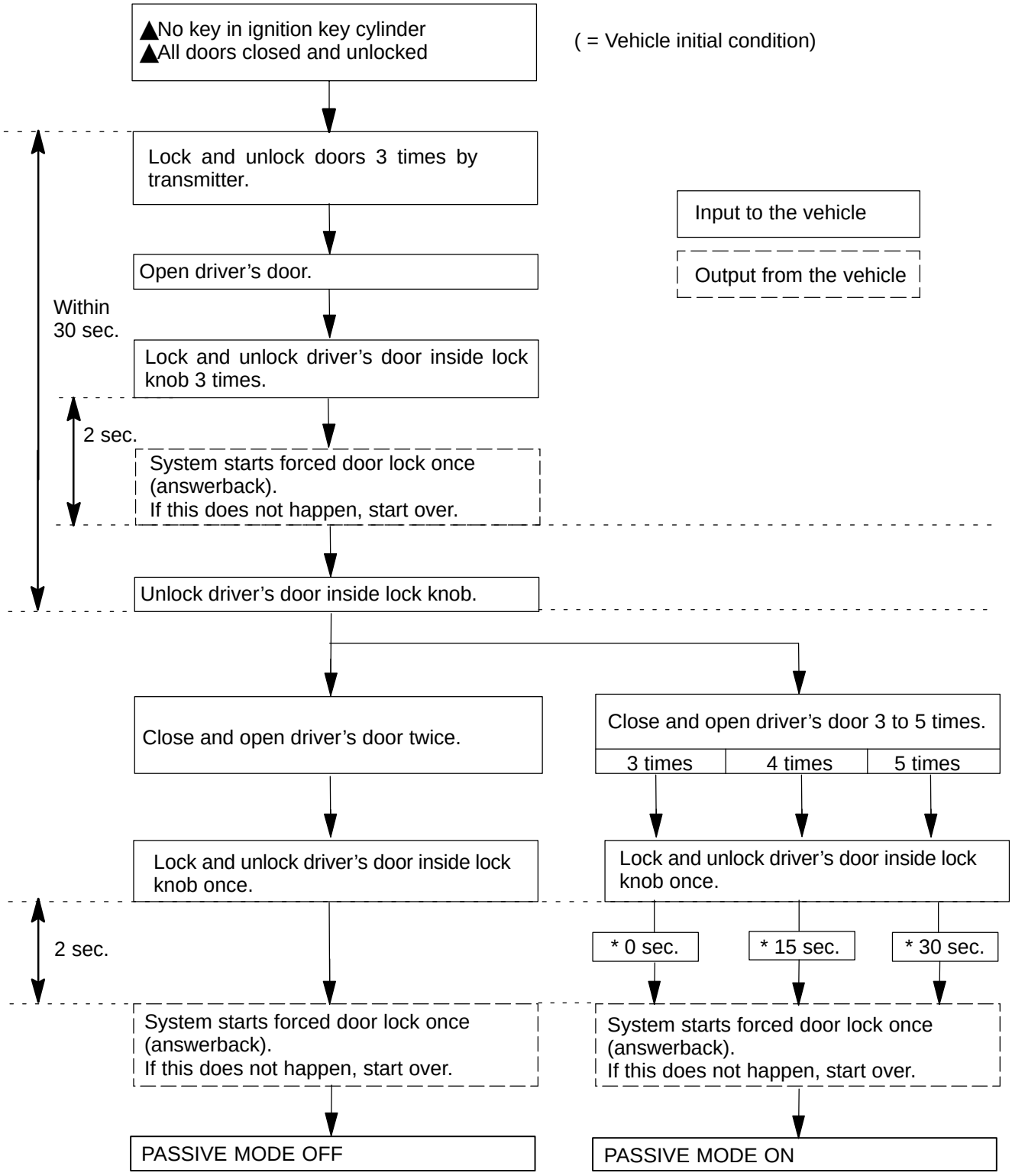

HINT:
▲PASSIVE MODE is OFF in the initial condition.
▲If there is a different signal in the middle of changing, it is invalid.
*: Entry delay time

5. FORCED DOOR LOCK CONTROL

Forced door lock is a control that prevents intrusion into vehicles. When a door is unlocked (when an alarm starts), instantaneously forced door lock will be executed.

(1) Condition to execute forced door lock:
- ◀ TOYOTA vehicle intrusion protection system is in the alarm sounding state of the active mode.
- ◀ No key is in the ignition key cylinder.
- ◀ Any of the doors is unlocked.
- ◀ Since the previous forced door lock, 0.38 seconds or more have elapsed.

(2) Conditions to stop forced door lock:
- ◀ All doors are locked.
- ◀ The alarm has finished.
- ◀ The key is inserted into the ignition key cylinder.

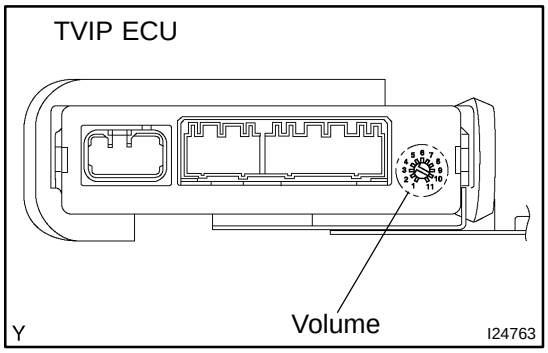

6. OPERATE GLASS BREAKAGE SENSOR

HINT:

The glass breakage sensor functions only during the active mode.

(a) If the glass breakage sensor detects that the glass is broken (at 1st time), the sensor will issue an alarm for 20 seconds (pre–alarm). If the glass breakage sensor detects the glass is broken further more (at 2nd time), the sensor will issue an alarm for 60 seconds.

HINT:

If the 2nd detection is performed during the pre–alarming time (20 seconds), the sensor will continuously issue the 2nd alarm. At this time, the total alarming time of the 1st alarm (pre–alarm) and 2nd alarm is 60 seconds.

(b) The sensitivity of the glass breakage sensor can be adjusted by the volume switch in the glass breakage sensor.

HINT:

Because the glass breakage sensor has a high sensitivity, it might issue a wrong alarm if the volume is adjusted of high sensitive.

WIRELESS DOOR LOCK CONTROL SYSTEM

BE2CN–01

PRECAUTION

NOTICES WHEN CHECKING

(a) The wireless door lock remote control operates only when the following 3 conditions are satisfied.
  (1) All the doors are closed. However, doors can be unlocked even when any of the doors is opened.
  (2) The key is not inserted in the ignition key cylinder.
  (3) The power door lock system operates normally.

(b) The wireless door lock remote control operational area varies with the situations.
  (1) The operational area varies with the operators or the ways to hold the transmitter.
  (2) The operational area may be narrowed down in some places due to the body configuration and the influence of the surrounding environment, or the remote control may not operate partially.
  (3) Because of using faint electric wave, in the case that there is a strong electric wave or noise in the frequency used area, the operational area may be narrowed down or the remote control may not be operated.
  (4) When the battery is consumed, the operational area is narrowed down or the remote control is not operated.

HINT:

If the door control transmitter is left on a place exposed to direct sunlight, such as on the instrument panel, the battery may wear or a trouble may be caused.

BE2CO–01

REGISTRATION PROCEDURE

REGISTER RECOGNITION CODE

HINT:

- The add mode is used to retain the registered recognition codes while a new recognition code is additionally registered. This mode is used when a new transmitter is added. If the number of the registered codes exceeds 4, the registered codes will be correspondingly erased in order, starting from the oldest code.
- The rewrite mode is used to erase all the registered recognition codes and register only new recognition codes. This mode is used when the transmitter or the door control receiver is exchanged for new one.
- The erase mode is used to erase all the registered recognition codes and cancel the wireless door lock function. This mode is used when the transmitter is lost.
- The synchronization mode is used to renew the sequential code (rolling code) of the transmitter and synchronize it with the registered recognition code. This mode is used when the transmitter does not function because they are unsynchronized.*1 Up to 4 transmitters can be synchronized at one time.
- The setting mode is used to set the optional operation via the transmitter that has the recognition code already registered. 2–unlock operation*2 is available as the option. The setting of up to 4 transmitters can be changed at one time.
- All the following registration procedures must be performed in order continuously.

*1: If a switch on the transmitter is pressed while out of range of the TVIP ECU, the system will not be able to synchronize the sequential code (rolling code) with the registered recognition code. At this time, the system will automatically synchronize them; however automatic synchronization can be performed only 500 times. Therefore, it is necessary to use this mode after they have synchronized 500 times.

*2: 2–unlock operation is a operation to unlock the door: when the UNLOCK switch is pressed once, only the driver's door will be unlocked; and when the UNLOCK switch is pressed again within 3 seconds, the other doors will be unlocked.

Registration Flow Chart of Recognition Code

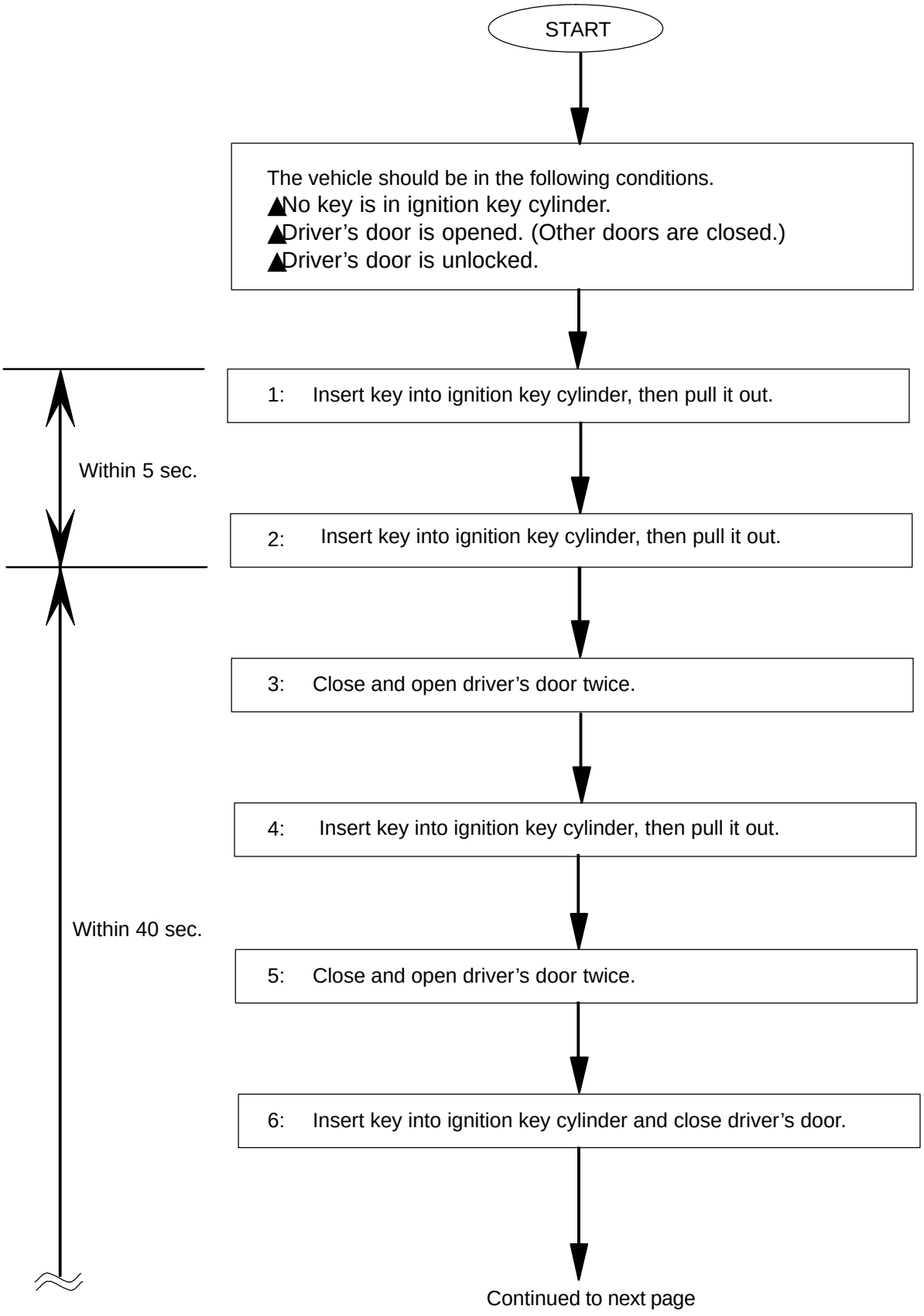

Continued from previous page

Within 40 sec.

Mode Selection:

7: Turn ignition switch from LOCK to ON and back to LOCK at approximately 1 second interval 1 to 6 times to select a mode.

Number of ON–LOCK operation of ignition switch:

Add Mode

ON–LOCK operation: 1 time

T1: Approx. 1 sec.

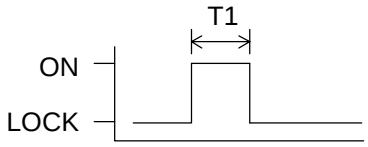

Rewrite Mode

ON–LOCK operation: 2 times

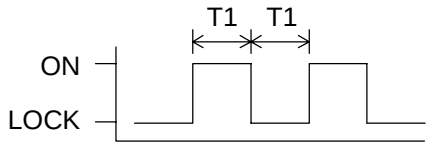

Setting Mode

ON–LOCK operation: 4 times

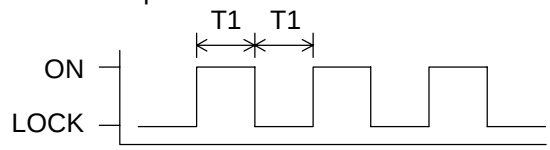

Erase Mode

ON–LOCK operation: 5 times

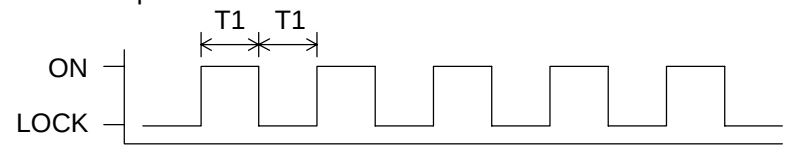

Synchronization Mode

ON–LOCK operation: 6 times

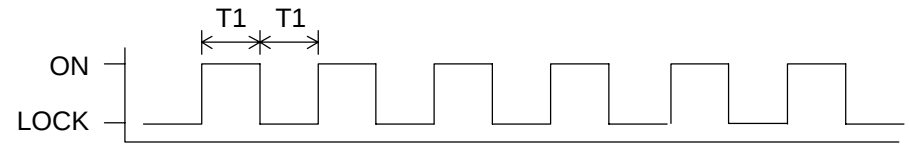

If the number of ON–LOCK operation of ignition switch is 0, 3 or 7 or more, there will be no response (power door lock and unlock operation) to inform which mode has been selected.

Continued to next page

Continued from previous page

8: Remove key from ignition key cylinder.

Response of selected mode (Power door lock operation):

TVIP ECU automatically performs power door LOCK–UNLOCK operation to inform which mode has been selected. In response to LOCK–UNLOCK operation, taillights blink and TVIP buzzer chirps.

Add Mode

LOCK–UNLOCK operation: 1 time

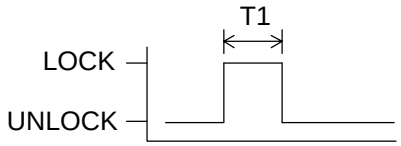

T1: Approx. 1 sec.

Rewrite Mode

LOCK–UNLOCK operation: 2 times

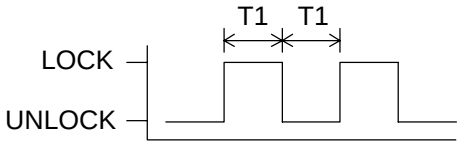

Setting Mode

LOCK–UNLOCK operation: 4 times

Within 2 sec.

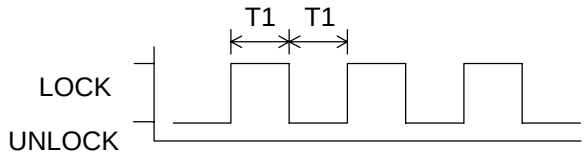

Erase Mode

LOCK–UNLOCK operation: 5 times

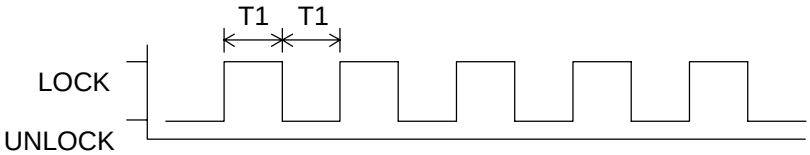

Synchronization Mode

LOCK–UNLOCK operation: 6 times

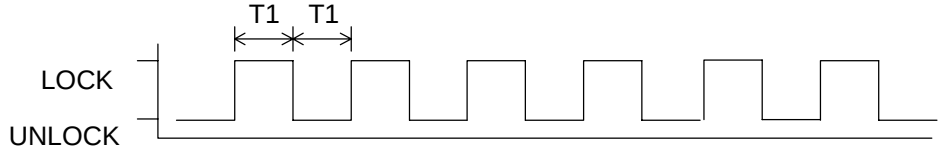

Add, Rewrite, Setting or Synchronization Mode

Continued to next page

Erase Mode

Registration procedure is completed.

Continued from previous page

9: Press LOCK and UNLOCK switches on transmitter simultaneously for 1.0 – 1.5 seconds.

Add, Rewrite or Synchronization Mode

Setting Mode

w/o 2–unlock operation

w/ 2–unlock operation

Within 40 sec.

10: Press LOCK switch for more than 1.0 second.

10: Press UNLOCK switch for more than 1.0 second.

10: Press LOCK switch for more than 1.0 second.

Within 2 sec.

Response for registration completion:

TVIP ECU automatically performs power door LOCK–UNLOCK operation to inform which mode has been selected. In response to LOCK–UNLOCK operation, taillights blink and TVIP buzzer chirps.

LOCK–UNLOCK Occurs Once

Registration of recognition code has been completed.

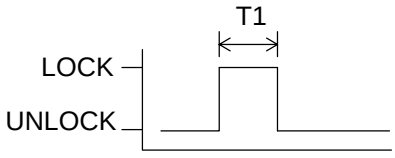

LOCK–UNLOCK Occurs Twice

Registration of recognition code has failed.

HINT:

If TVIP ECU receives recognition code that has not been registered in synchronization mode, registration of recognition code will fail.

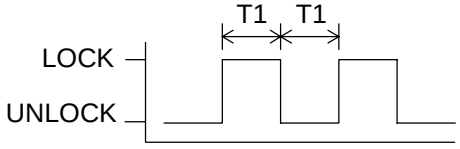

T1: Approx. 1 sec.

Proceed with flow chart to finish registration.

Within 40 sec.

If another transmitter is to be registered.

HINT:

4 types of recognition codes can be registered at one time.

Open driver' door.

Registration of recognition codes (add, rewrite, setting or synchronization mode) is completed.

BE2CP–01

ON–VEHICLE INSPECTION

INSPECT WIRELESS DOOR LOCK CONTROL FUNCTIONS

HINT:

The switch described in this text is a switch for transmission (LOCK switch, UNLOCK switch and PANIC switch), which is built in the door control transmitter.

(a) Allow the vehicle to be in the initial condition (condition that the wireless control is possible).
The followings are the vehicle's initial condition.
- ▲ No key in the ignition key cylinder
- ▲ All the doors closed (door open indicator off)
- ▲ All the doors locked

(b) Check the basic function.
(1) Check whether the LED of the transmitter lights up 3 times when each switch is pressed 3 times.

HINT:

- ▲ If the LED does not light up when the switch has been pressed 3 times or more, it may be caused by the dead battery.
- ▲ If the switch is kept pressed, the LED blinks continuously.

(2) In the remote control operational area, check that all the doors will be locked when the LOCK switch is pressed. (However, this will not happen when the key is in the ignition key cylinder or any of the doors is open.)
(3) In the remote control operational area, check that all the doors will be unlocked when the UNLOCK switch is pressed. (However, this will not happen when the key is in the ignition key cylinder.)

HINT:

- ▲ The UNLOCK operation is possible even when any of the doors is open.
- ▲ If the 2–unlock operation is set in the setting mode of a transmitter, the unlock operation is not carried out as specified in step (3) but carried out as follows:
Only the driver's door will be unlocked when the UNLOCK switch is pressed once, and the other door will be unlocked when the UNLOCK switch is pressed again within 3 seconds. (However, this will not happen when the key is in the ignition key cylinder.)

(c) Check the chattering prevention function.
Check that the corresponding operation will be performed only once but not repeated continuously when the switch has been kept pressed. However, if the operations are carried out by approximately 1 second interval, from the time to release the switch until the time to press it again, check that the corresponding operation to the switch pressed next will be carried out.

(d) Check the automatic locking function.
(1) Check that all the doors will be automatically locked as long as any of the doors has not been opened or all the doors have not been locked within approximately 30 seconds after all the doors are unlocked by pressing the switch.
(2) Check that the automatic locking function will not work if any of the doors has been opened or all the doors have been locked within approximately 30 seconds after all the doors are unlocked by pressing the switch.

(e) Check the switch operation fail–safe function.
Check that the doors are not locked or unlocked by pressing the switch while the ignition key is in the ignition key cylinder. However, the time of the recognition code registration mode is excepted.

(f) Check the operation stop function when a door is open or not completely closed.
Check that the doors are not locked by pressing the switch while any of the doors is open or not completely closed.

(g) Check the repeat function.
After the LOCK switch has been pressed while the move of the driver's door control knob, which is in unlocking state, is being blocked forcibly, check that all the doors will be automatically locked once again in 2 seconds.

(h) Check the taillights and parking lights flashing and TVIP buzzer chirp function (answerback).
(1) When the LOCK switch is pressed, check that the taillights and parking lights will flash once and the TVIP buzzer will chirp once, simultaneously with all the doors locking operation.
(2) When the UNLOCK switch is pressed, check that the taillights and parking lights will flash twice, the TVIP buzzer will chirp twice and the interior light will remain on for 30 seconds, simultaneously with all the doors unlocking operation.

(i) Check the remote panic function.
Check that the horn will sound, the headlights, taillights and parking lights will flash, and the interior light will remain on for 60 seconds by the theft alarm function, when the PANIC switch is pressed. And, check that the horn sounding and lights flashing will stop when the either of the PANIC, LOCK or UNLOCK switch is pressed or the door is either locked or unlocked using the key. (However, this will not happen when the key is in the ignition key cylinder.)

BE2CU–01

LOCATION

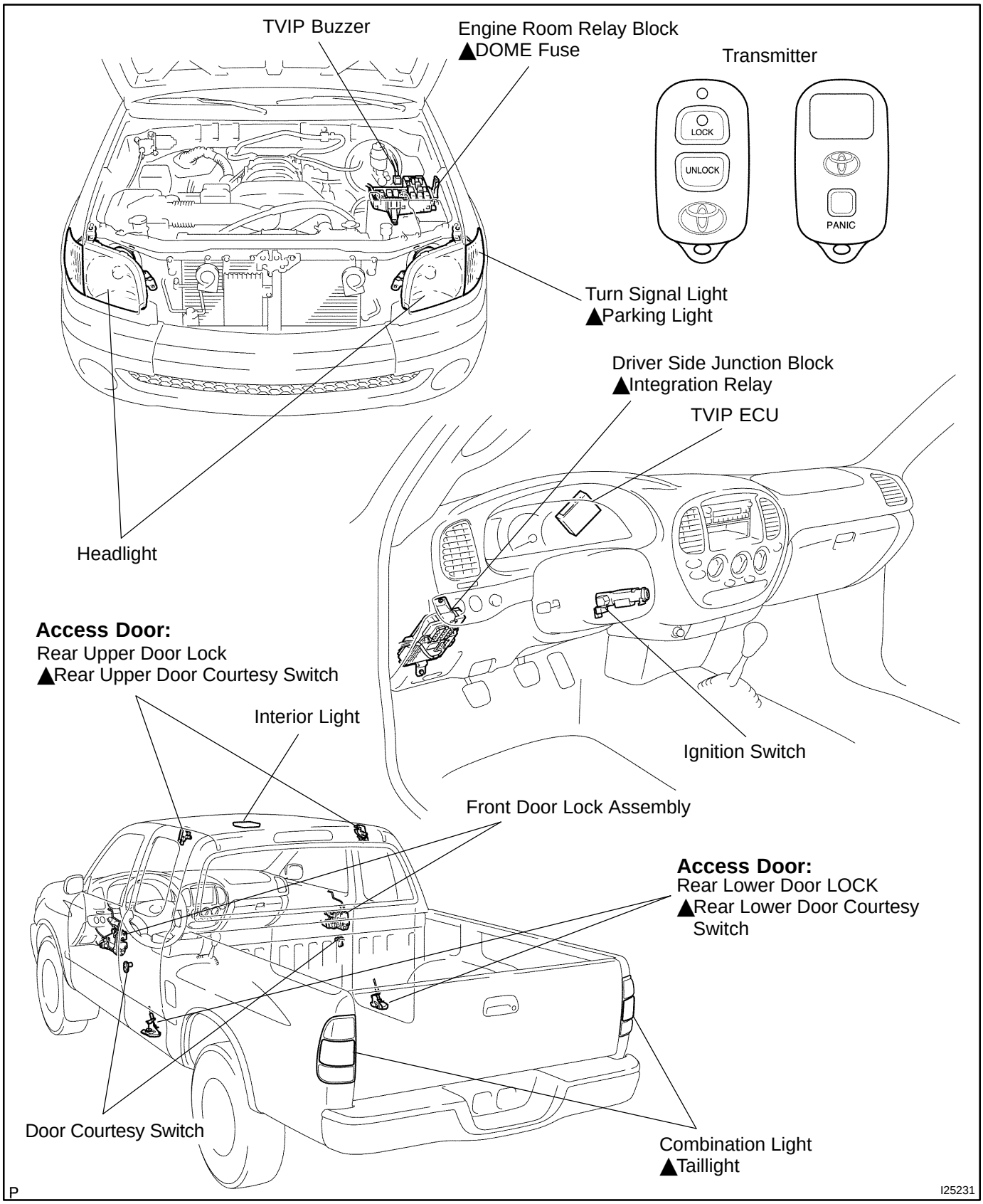

BE2CQ–01

INSPECTION

1. INSPECT WIRELESS DOOR LOCK TRANSMITTER OPERATION

(a) Remove the battery (lithium battery) from the transmitter (See page BE–98).

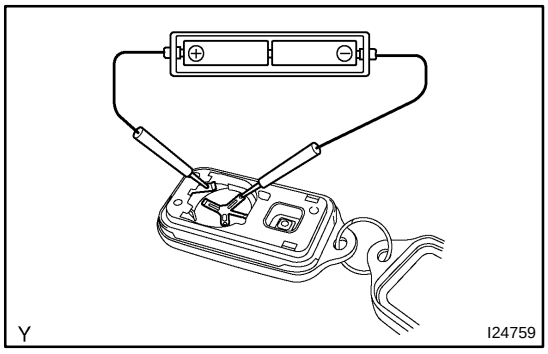

(b) Install a new or normal battery (lithium battery).

HINT:

When a new or normal battery can not be obtained, connect 2 new 1.5 V batteries in series, connect the battery (+) to the battery receptacle side terminal and battery (–) to the bottom terminal, then apply 3 V voltage to the transmitter.

(c) In the location that is approx. 1 m (3.28 ft) away from driver's outside handle in the right direction, face the key plate of the transmitter to the vehicle, and check the transmitter operation when pressing a transmission switch on the transmitter body.

Standard:

The remote control of vehicle door lock can be operated.

HINT:

- The minimum operation distance differs according to the operator, the way of holding, and location.
- Since weak wave is used, the operation distance might be shortened when noise or strong wave is detected in the area where the frequency is used.

(d) Install the battery (lithium battery).

2. CHECK BATTERY CAPACITY

HINT:

- With the battery unloaded, the judge can not be made whether the battery is available or not on the test.
- When the transmitter is faulty, the energy amount left in the battery might not be checked correctly.
- For the lithium battery used for the transmitter, the voltage more than 2.5 V with the battery unloaded is shown on the tester until the energy is completely consumed.
  Accordingly when inspecting the energy amount left in the battery, it is necessary to measure the voltage when the battery is loaded (1.2 kΩ).

(a) Remove the battery (lithium battery) from the transmitter (See page BE–98).

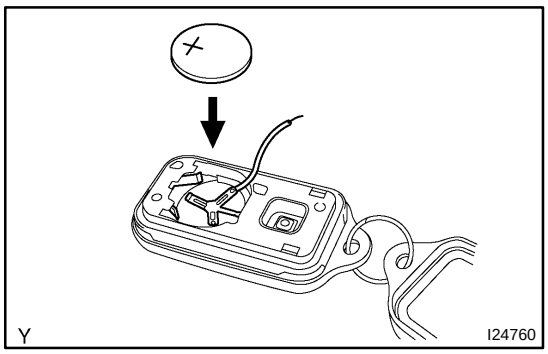

(b) Connect the lead to the (–) terminal of the transmitter and install the battery.

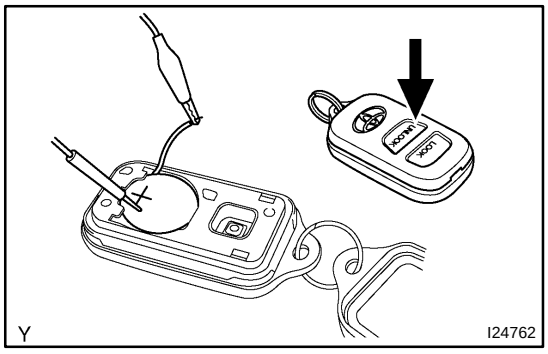

(c) Connect the (+) tester to the (+) battery (lithium battery), and (–) tester to the lead respectively.

(d) Press one of the transmitting switches on the transmitter for approx. 1 second.

(e) Press the transmitting switch on the transmitter again to check the voltage.

Standard: 2.2 V or more

HINT:

▲ When the temperature of the battery is low, the judge can not be made correctly.
When the outcome of the test is less than 2.2 V, conduct the test again after leaving the battery in a place at 18 ˚C for more than 30 minutes.

▲ By automatic power off function, the voltage becomes no load voltage (more than 2.5 V) condition after 20 seconds from the switch is pressed.
Make sure to read the voltage just after the switch is pressed.

▲ Since high voltage might be shown once or twice after the battery is left, the judge should be made with the voltage shown at the 3rd time or later.

(f) Disconnect the lead.

(g) Set the battery (lithium battery) in the transmitter.

BE2CR–01

REPLACEMENT

1. REPLACE TRANSMITTER BATTERY

NOTICE:

Special caution should be taken for handling each component as they are precision electronic components.

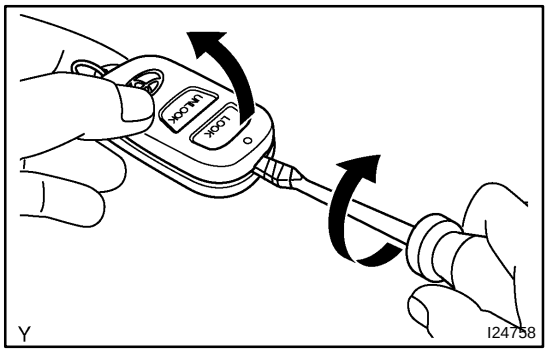

(a) Using a screwdriver, open the transmitter case.

NOTICE:

Do not pry out the cover forcibly.

(b) Remove the battery (lithium battery).

NOTICE:

- **Do not push the terminals with a finger.**
- **If prying up the batteries (lithium battery) forcibly to remove, the terminals are deformed.**
- **Do not replace the batteries with wet hands. Water may cause unexpected rust.**
- **Do not touch or move any components inside the transmitter, or it may interfere with the proper operation.**

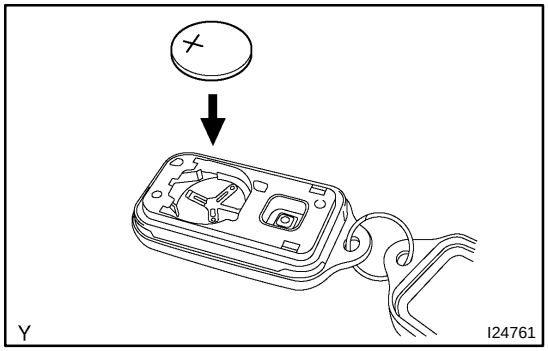

(c) Install a new battery (lithium battery) with the positive (+) side up, as shown in the illustration.

NOTICE:

- **Check that the positive side and negative side of the transmitter battery should be faced correctly.**
- **Be careful not to bend the electrode of the transmitter battery insertion.**
- **Be careful that no dust or oil will adhere to the transmitter case.**

(d) Check that the rubber cover is not distorted or slipped off, and install the cover.

NOTICE:

Any damage might cause faulty contact of battery (lithium battery) and terminals.

POWER SEAT CONTROL SYSTEM

LOCATION

BE17F–04

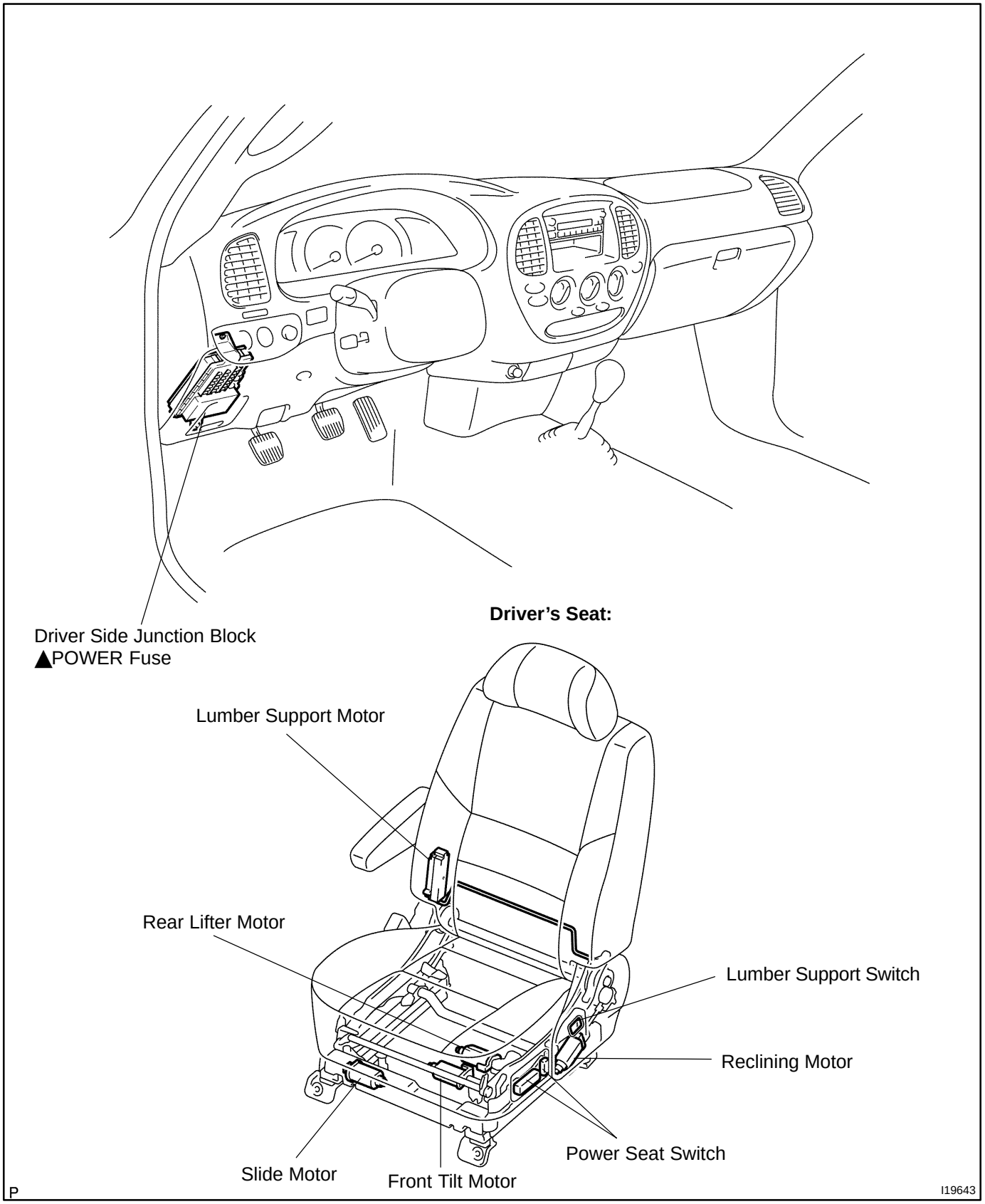

BE1ZD–04

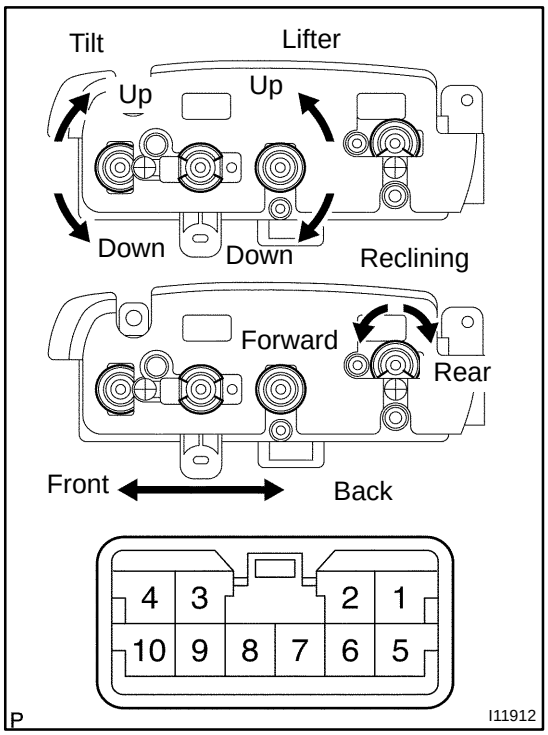

INSPECTION

1. INSPECT POWER SEAT SWITCH CONTINUITY

Slide switch:

Switch position	Tester connection	Specified condition
FRONT	1 – 9 4 – 6	Continuity
OFF	4 – 6 – 9	Continuity
BACK	1 – 6 4 – 9	Continuity

Front tilt switch:

Switch position	Tester connection	Specified condition
UP	1 – 10 4 – 5	Continuity
OFF	4 – 5 – 10	Continuity
DOWN	1 – 5 4 – 10	Continuity

Rear lifter switch:

Switch position	Tester connection	Specified condition
UP	1 – 7 4 – 8	Continuity
OFF	4 – 7 – 8	Continuity
DOWN	1 – 8 4 – 7	Continuity

Reclining switch:

Switch position	Tester connection	Specified condition
FORWARD	1 – 3 2 – 4	Continuity
OFF	2 – 3 – 4	Continuity
REAR	1 – 2 3 – 4	Continuity

If the continuity is not as specified, replace the switch.

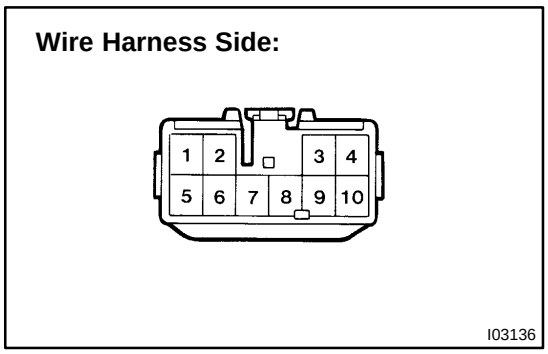

2. CHECK POWER SEAT SWITCH CIRCUIT

(a) Disconnect the switch connector and connect the seat wire harness to the floor wire harness.

(b) Inspect the connector on the wire harness side.

Tester connection	Condition	Specified condition
4 – Ground	Constant	Continuity
1 – Ground	Constant	Battery positive voltage

If the circuit is not as specified, inspect the circuits connected to other parts.

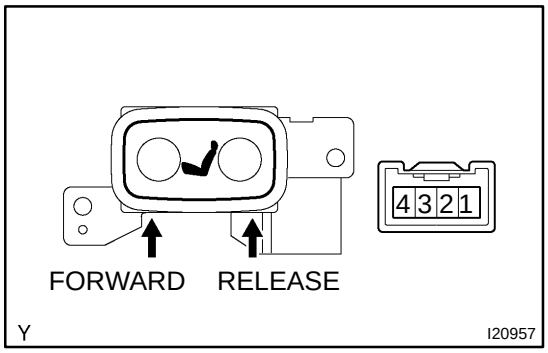

3. INSPECT LUMBAR SUPPORT SWITCH CONTINUITY

Switch position	Tester connection	Specified condition
FORWARD	1 – 4 2 – 3	Continuity
OFF	1 – 3 2 – 3	Continuity
RELEASE	1 – 3 2 – 4	Continuity

If the continuity is not as specified, replace the switch.

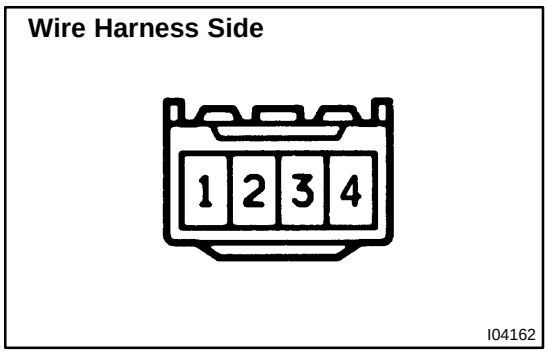

4. CHECK LUMBAR SUPPORT SWITCH CIRCUIT

(a) Disconnect the switch connector and connect the seat wire harness to the floor wire harness.

(b) Inspect the connector on the wire harness side.

Tester connection	Condition	Specified condition
3 – Ground	Constant	Continuity
4 – Ground	Constant	Battery positive voltage

If the circuit is not as specified, inspect the circuits connected to other parts.

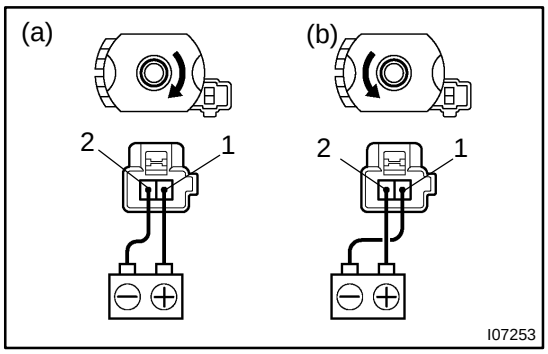

5. INSPECT SLIDE MOTOR OPERATION

(a) Connect the positive (+) lead from the battery to terminal 1 and the negative (–) lead to terminal 2, check that the motor turns clockwise.

(b) Reverse the polarity, check that the motor turns counter-clockwise.

If the operation is not as specified, replace the seat adjuster.

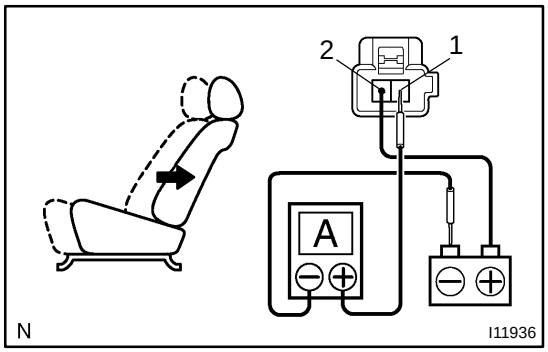

6. INSPECT SLIDE MOTOR PTC THERMISTOR OPERATION

(a) Connect the positive (+) lead from the battery to terminal 2, the positive (+) lead from the ammeter to terminal 1 and the negative (–) lead to the battery negative (–) terminal, then move the seat cushion to the rear position.

(b) Continue to apply voltage, check that current changes to less than 1 ampere within 4 to 90 seconds.

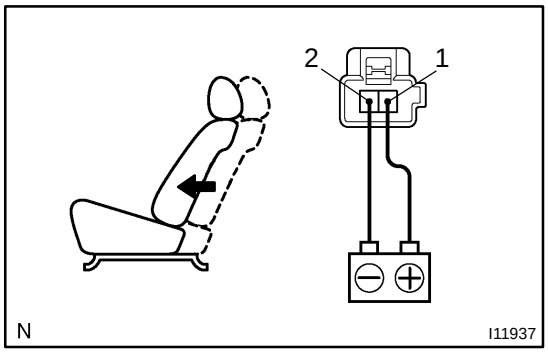

(c) Disconnect the leads from terminals.

(d) Approximately 60 seconds later, connect the positive (+) lead from the battery to terminal 1 and the negative (–) lead to terminal 2, check that the seat cushion begins to move forwards.

If the operation is not as specified, replace the seat adjuster.

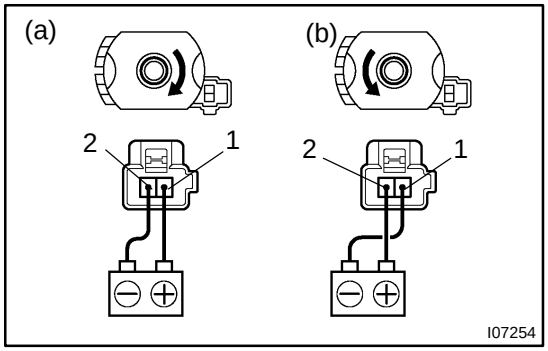

7. INSPECT FRONT TILT MOTOR OPERATION

(a) Connect the positive (+) lead from the battery to terminal 1 and the negative (–) lead to terminal 2, check that the motor turns clockwise.

(b) Reverse the polarity, check that the motor turns counter-clockwise.

If the operation is not as specified, replace the seat adjuster.

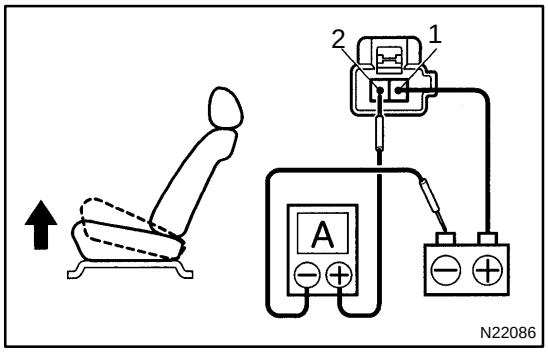

8. INSPECT FRONT TILT MOTOR PTC THERMISTOR OPERATION

(a) Connect the positive (+) lead from the battery to terminal 1, the positive (+) lead from the ammeter to terminal 2 and the negative (–) lead to the battery negative (–) terminal, then move the seat cushion to the highest position.

(b) Continue to apply voltage, check that the current changes to less than 1 ampere within 4 to 90 seconds.

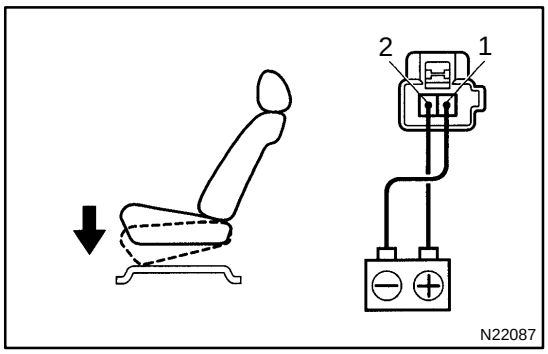

(c) Disconnect the leads from the terminals.
(d) Approximately 60 seconds later, connect the positive (+) lead from the battery to terminal 2 and the negative (–) lead to terminal 1, check that the seat cushion begins to descend.

If the operation is not as specified, replace the seat adjuster.

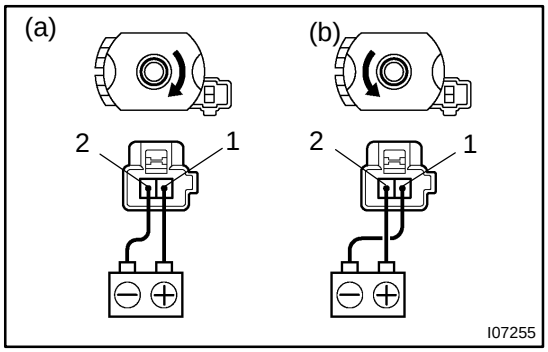

9. INSPECT LIFTER MOTOR OPERATION

(a) Connect the positive (+) lead from the battery to terminal 1 and the negative (–) lead to terminal 2, check that the motor turns clockwise.
(b) Reverse the polarity, check that the motor turns counter-clockwise.

If the operation is not as specified, replace the seat adjuster.

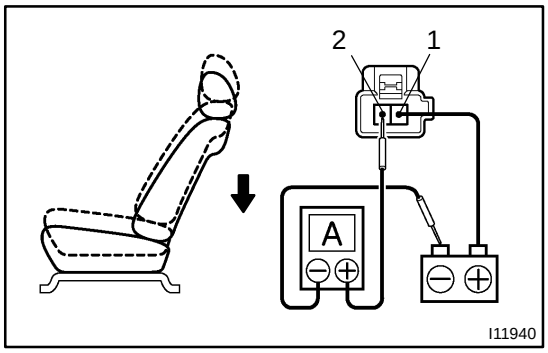

10. INSPECT LIFTER MOTOR PTC THERMISTOR OPERATION

(a) Connect the positive (+) lead from the battery to terminal 1, the positive (+) lead from the ammeter to terminal 2 and the negative (–) lead to the battery negative (–) terminal, then move the seat cushion to the lowest position.
(b) Continue to apply voltage, check that the current changes to less than 1 ampere within 4 to 90 seconds.

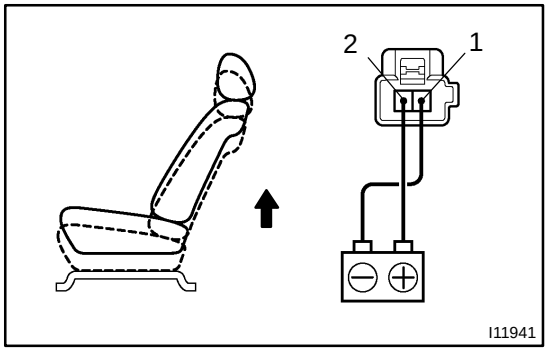

(c) Disconnect the leads from the terminals.
(d) Approximately 60 seconds later, connect the positive (+) lead from the battery to terminal 2 and the negative (–) lead to terminal 1, check that the seat cushion begins to ascend.

If the operation is not as specified, replace the seat adjuster.

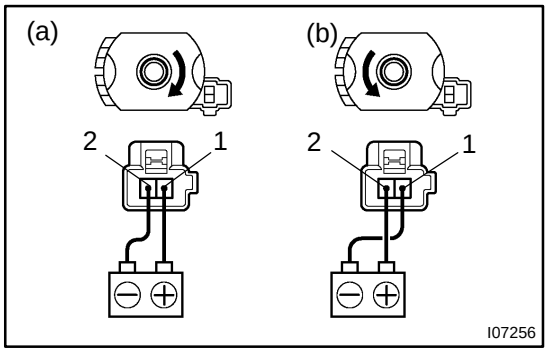

11. INSPECT RECLINING MOTOR OPERATION

(a) Connect the positive (+) lead from the battery to terminal 1 and the negative (–) lead to terminal 2, check that the motor turns clockwise.
(b) Reverse the polarity, check that the motor turns counter-clockwise.

If operation is not as specified, replace the seat adjuster.

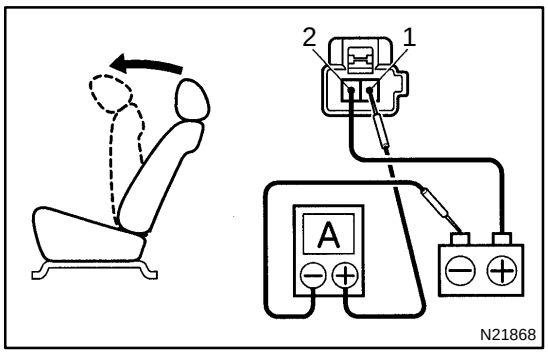

12. INSPECT RECLINING MOTOR PTC THERMISTOR OPERATION

(a) Connect the positive (+) lead from the battery to terminal 2, the positive (+) lead from the ammeter to terminal 1 and the negative (–) lead to the battery negative (–) terminal, then recline the seat back to the most forward position.

(b) Continue to apply voltage, check that the current changes to less than 1 ampere within 4 to 90 seconds.

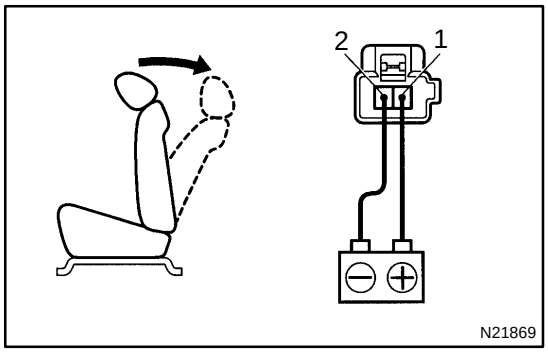

(c) Disconnect the leads from the terminals.

(d) Approximately 60 seconds later, connect the positive (+) lead from the battery to terminal 1 and the negative (–) lead to terminal 2, check that the seat back begins to fall backward.

If operation is not as specified, replace the seat adjuster.

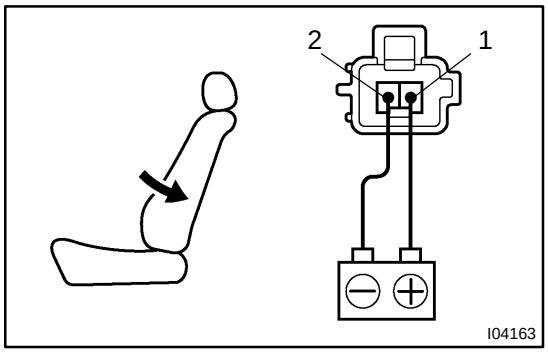

13. INSPECT LUMBAR SUPPORT MOTOR OPERATION

(a) Connect the positive (+) lead from the battery to terminal 1 and the negative (–) lead to terminal 2, check that the lumbar support moves to release side.

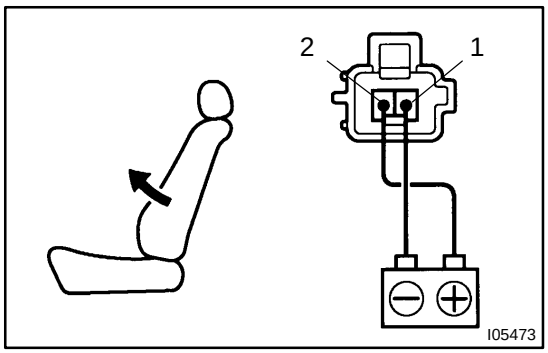

(b) Reverse the polarity, check that the lumbar support moves forward.

If the operation is not as specified, replace the lumber support adjuster.

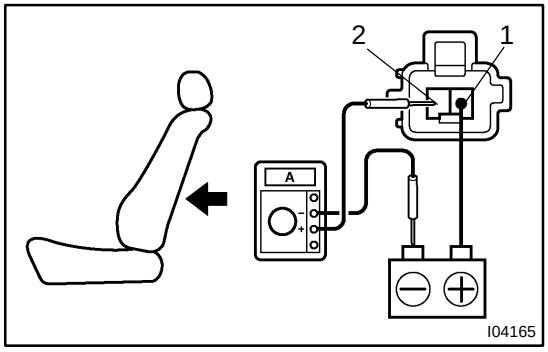

14. INSPECT LUMBAR SUPPORT MOTOR CIRCUIT BREAKER OPERATION

(a) Connect the positive (+) lead from the battery to terminal 2 and the negative (–) lead to terminal 1 on the lumbar support motor connector and move the lumbar support to front end position.

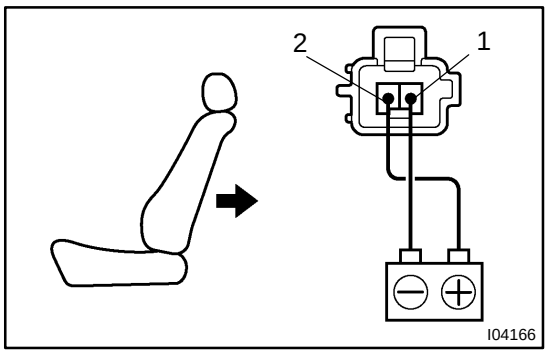

(b) Continue to apply voltage, check that a circuit breaker operation noise can be heard within 4 to 60 seconds.

(c) Reverse the polarity, check that the lumbar support begins to move release side with in approximately 60 seconds.

If the operation is not as specified, replace the lumber support adjuster.

POWER MIRROR CONTROL SYSTEM

BE03G–05

LOCATION

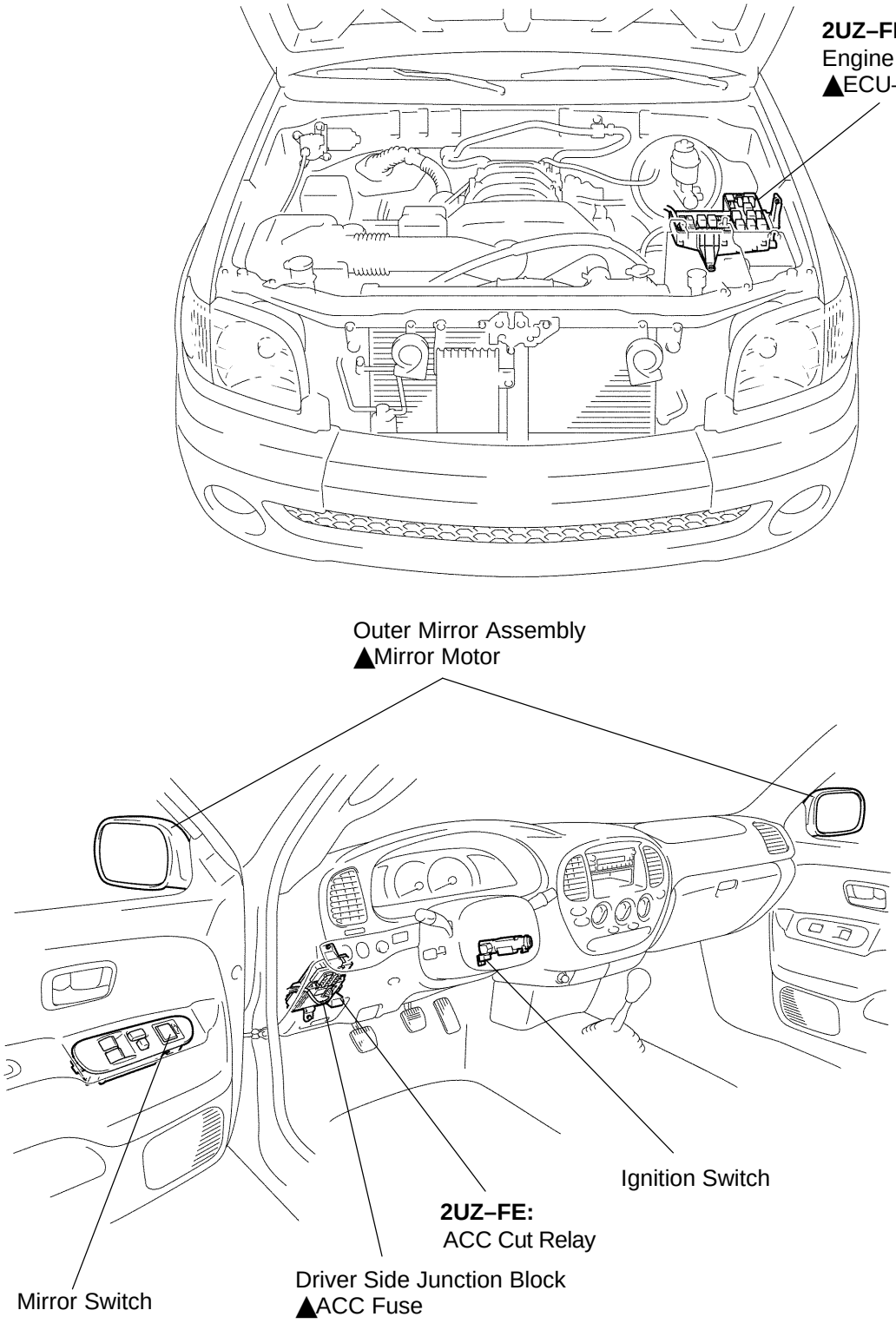

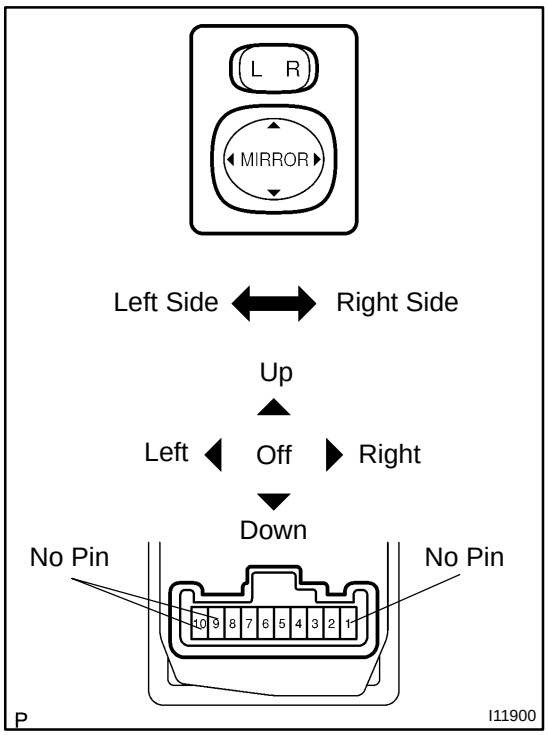

INSPECTION

1. Left side:

INSPECT MIRROR SWITCH CONTINUITY

Switch position	Tester connection	Specified condition
OFF	–	No continuity BE2CS–01
UP	4 – 8, 7 – 6	Continuity
DOWN	4 – 7, 6 – 8	Continuity
LEFT	5 – 8, 7 – 6	Continuity
RIGHT	5 – 7, 6 – 8	Continuity

If the continuity is not as specified, replace the switch.

2. Right side:

INSPECT MIRROR SWITCH CONTINUITY

Switch position	Tester connection	Specified condition
OFF	–	No continuity
UP	3 – 8, 7 – 6	Continuity
DOWN	3 – 7, 6 – 8	Continuity
LEFT	5 – 8, 7 – 6	Continuity
RIGHT	5 – 7, 6 – 8	Continuity

If the continuity is not as specified, replace the switch.

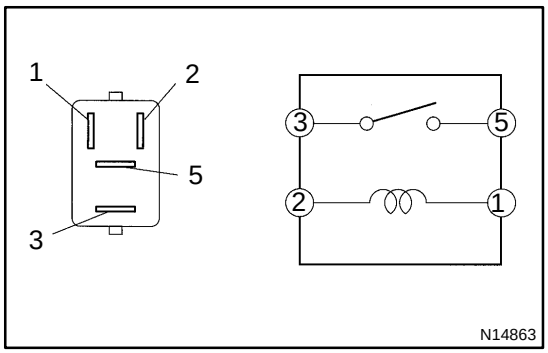

3. 2UZ–FE:

INSPECT ACC CUT RELAY CONTINUITY

Condition	Tester connection	Specified condition
Constant	1 – 2	Continuity
Apply B+ between terminals 1 and 2	3 – 5	Continuity

If the continuity is not as specified, replace the relay.

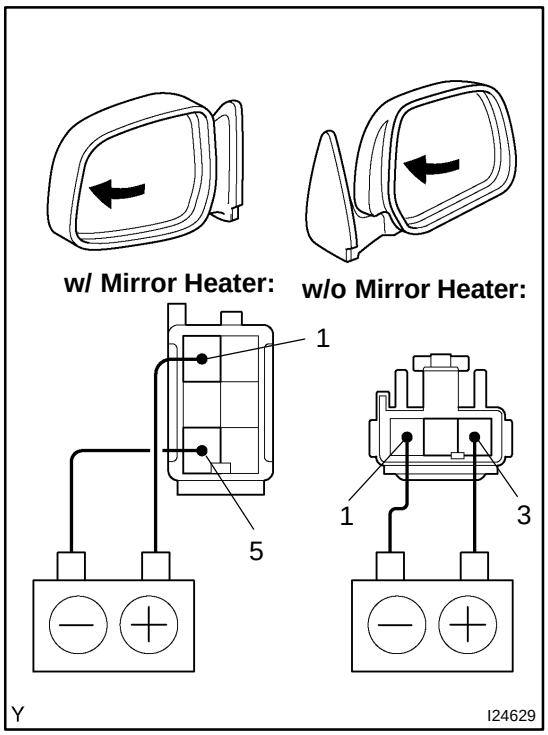

4. INSPECT MIRROR MOTOR OPERATION

(a) Connect the positive (+) lead from the battery to terminal 1 (3) and the negative (–) lead to terminal 5 (1). Check that the mirror turns left.

( ): w/o Mirror heater.

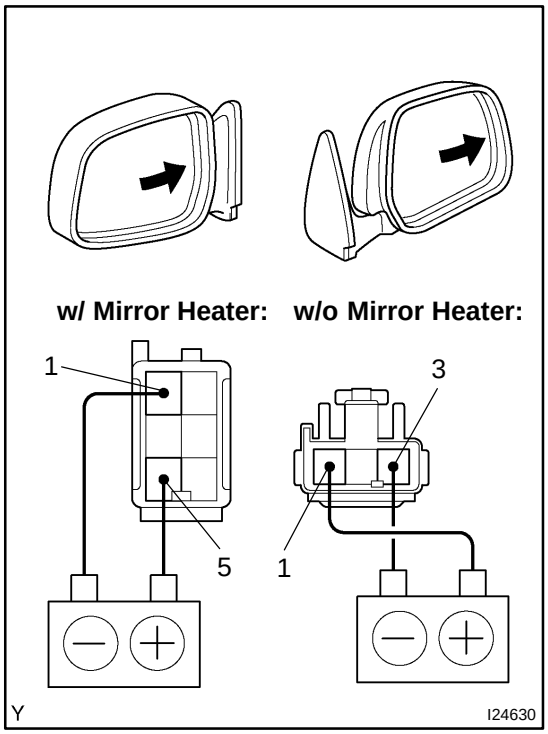

(b) Reverse the polarity, check that the mirror turns right.

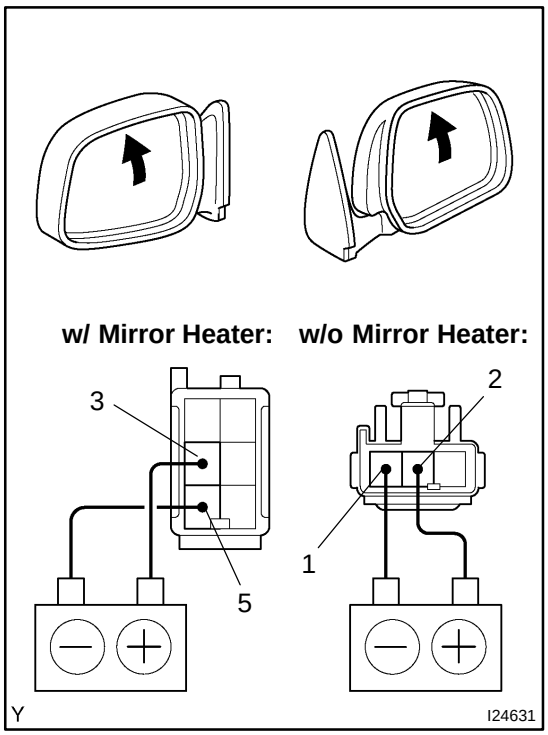

(c) Connect the positive (+) lead from the battery to terminal 3 (2) and the negative (–) lead to terminal 5 (1). Check that the mirror turns upward.

( ): w/o Mirror heater.

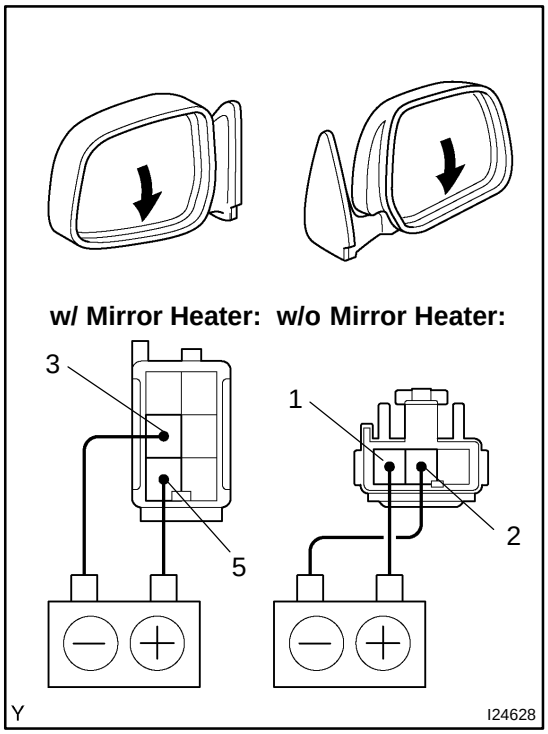

(d) Reverse the polarity, check that the mirror turns downward.

If the operation is not as specified, replace the mirror assembly.

AUDIO SYSTEM

BE1ZU–02

DESCRIPTION

1. RADIO WAVE BAND

The radio wave bands used in radio broadcasting are as follows:

Frequency	30 kHz	300 kHz	3 MHz	30 MHz	300 MHz
Designation	LF	MF	HF	VHF	
Radio wave		AM ⟷		FM ⟷	
Modulation	Amplitude modulation			Frequency modulation	

LF: Low Frequency
MF: Medium Frequency
HF: High Frequency
VHF: Very High Frequency

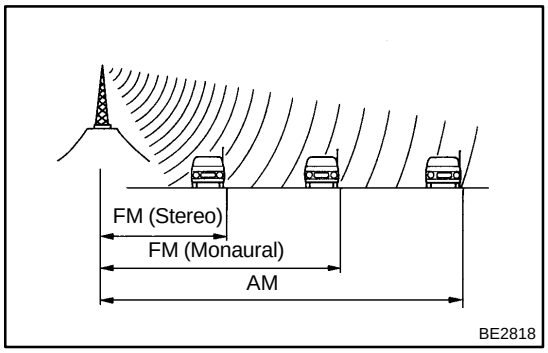

2. SERVICE AREA

There are great differences in the size of the service areas for AM and FM broadcasts. Sometimes FM stereo broadcasts cannot be received in an area where AM broadcasts can be received very clearly.
Not only does FM stereo broadcasts have the smallest service area, but it also picks up static and other types of interference (”noise”) easily.

3. RECEPTION PROBLEMS

Besides the problem of static, there are also the problems called ”fading”, ”multi–path” and ”fade out”. These problems are not caused by electrical noise but by the nature of the radio waves themselves.

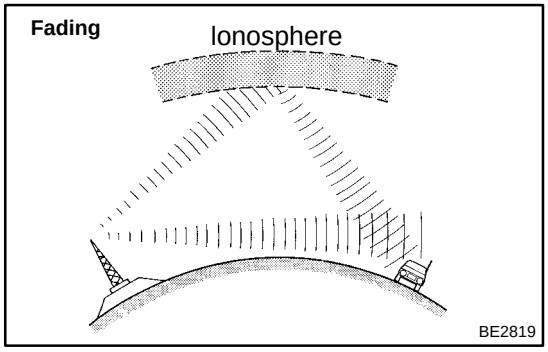

(1) Fading:
Besides electrical interference, AM broadcasts are also susceptible to other types of interference, especially at night. This is because AM radio waves bounce off the ionosphere at night. These radio waves then interfere with the signals from the transmitter which reach the vehicle’s antenna directly. This type of interference is called ”fading”.

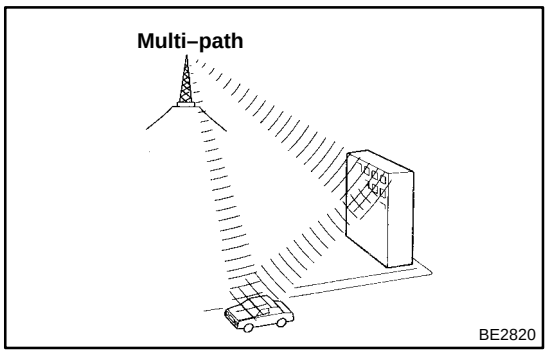

(2) Multi–path:
One type of interference caused by bounce of radio waves against obstructions is called ”multi–path”. Multi–path occurs when a signal from the broadcast transmitter antenna bounces off buildings and mountains and interferes with the signal that is received directly.

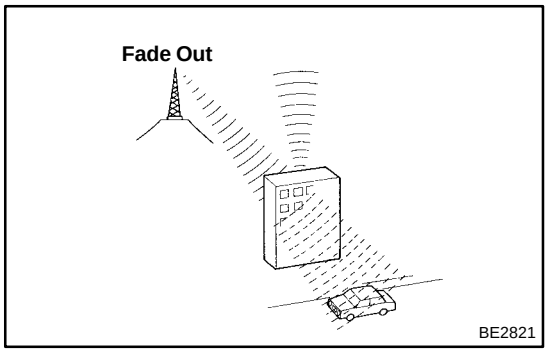

(3) Fade Out:
Because FM radio waves are of higher frequencies than AM radio waves, they bounce off buildings, mountains, and other obstructions. For this reason, FM signals often seem to gradually disappear or fade out as the vehicle goes behind buildings or other obstructions. This is called ”fade out”.

4. COMPACT DISC PLAYER

Compact disc players use a laser beam pick–up to read the digital signals recorded on the CD and reproduce analog signals of the music, etc.

HINT:

Never attempt to disassemble or put oil on any part of the player unit. Do not insert any object other than a disc into the magazine.

NOTICE:

CD players use an invisible laser beam which could cause hazardous radiation exposure. Be sure to operate the player correctly as instructed.

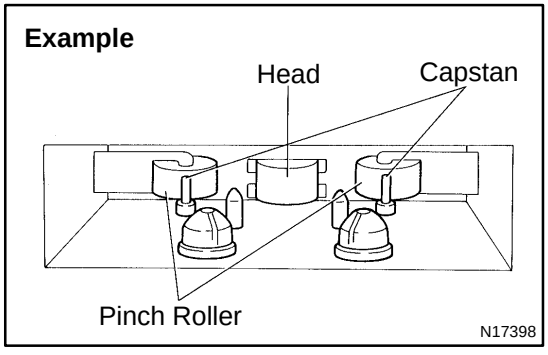

5. Tape player/head cleaning:

MAINTENANCE

(a) Raise the cassette door with your finger. Next, using a pencil or similar object, push in the guide.

(b) Using a cleaning pen or cotton applicator soaked in cleaner, clean the head surface, pinch rollers and capstans.

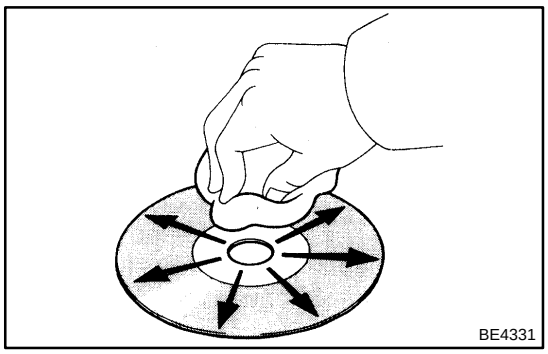

6. CD player/disc cleaning: MAINTENANCE

If a disc becomes dirty, clean the disc by wiping the surface from the center to outside in the radial directions with a soft cloth.

NOTICE:

Do not use a conventional record cleaner or anti–static preservative.

7. OUTLINE OF AVC–LAN

(a) What is AVC–LAN?

AVC–LAN is an abbreviation, which stands for Audio Visual Communication–Local Area Network. This is a unified standard co–developed by 6 audio manufactures associated with Toyota Motor Corporation.

The unified standard covers signals, such as audio signals, visual signals, signals for switch indications and communication signals.

(b) Objectives

Recently the car audio system has been rapidly developed and functions have been changed drastically. The conventional system has been switched to the multi–media type such as a navigation system. At the same time, the level that customers needs to audio systems has been upgraded. These cause lie this standardization.

The concrete objectives are explained below.

(1) When products made by different manufactures were combined together, there used to be a case that a malfunction occurred such as sound did not come out. This problem has been resolved by the standardization of signals.

(2) Various types of aftermarket products have been able to added or replaced freely.

(3) Because of the above (2), each manufacture has become able to concentrate on developing products in their strongest field. This has enabled many types of products to be provided inexpensively.

(4) Conventionally, a new product developed by a manufacture could not be used due to a lack of compatibility with other manufactures products. Because of this new standard, users can enjoy compatible products provided for them timely.

(c) The above descriptions are the objectives to introduce the AVC–LAN. By this standardization, development of new products will no longer cause systematic errors. Thus, this is very effective standard for a product in the future.

HINT:

- When +B short or GND short is detected in the AVC–LAN circuit, communication stops. Accordingly the audio system does not function normally.
- When an audio system is not equipped with a navigation system, audio head unit is the master unit. (When an audio system is equipped with a navigation system, the radio receiver is the master unit.)
- A car audio system using the AVC–LAN circuit has a diagnosis function.
- Each product has its own specified numbers called physical address. Numbers are also allotted to each function in one product, which are called logical address.

BE0YT–10

TROUBLESHOOTING

1. DIAGNOSIS FUNCTION

(a) Diagnosis mode start–up:

When the audio power is OFF and ACC is ON, push DISC or CD button 3 times with 1 and 6 of TRUCK TUNE APS buttons simultaneously pressed. Then, the audio system enters into the diagnosis mode.

HINT:

To exit from the diagnosis mode, press DISC or CD button for 1.7 seconds or turn the ignition switch OFF.

<Example>

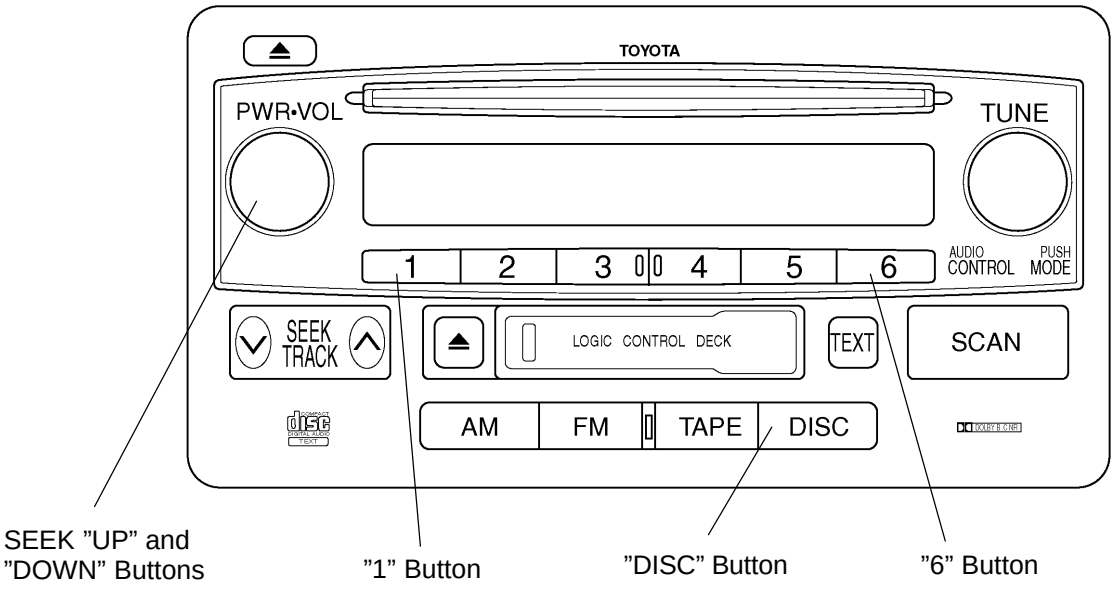

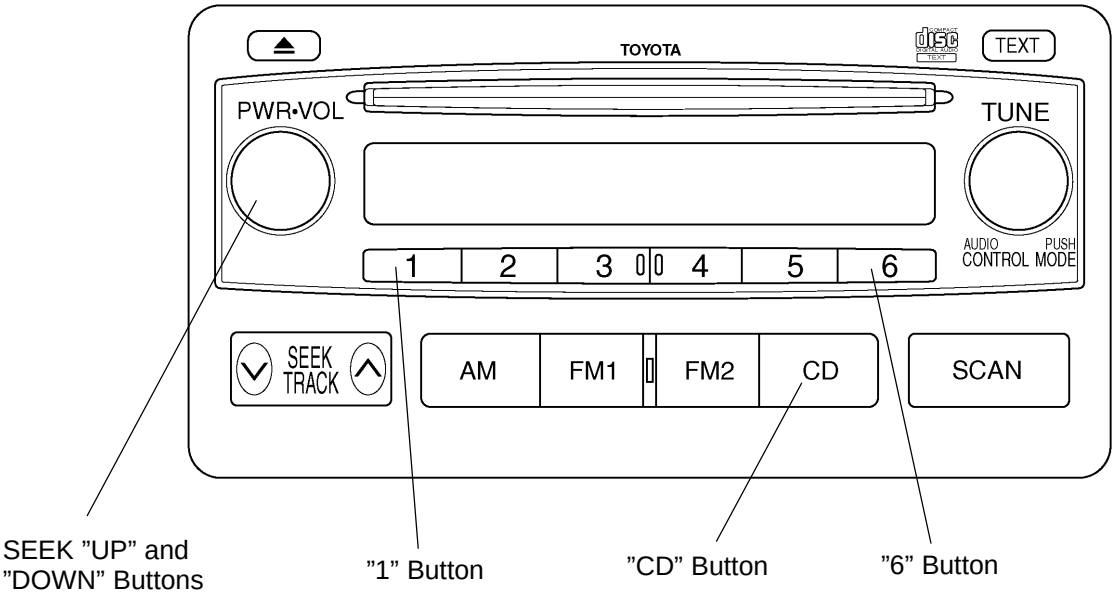

Y

I24768

(b) Element lighting mode:
  (1) After the audio system has entered into the diagnosis mode, the system automatically goes into the element lighting mode and causes all the elements on the LCD to light up. During this mode, all the elements remain on.
  (2) Check if the elements function properly. If the elements light up, they are functioning properly.
  (3) Check if the buttons function properly by pushing them. If a beep sound (3 kHZ, 50ms) is heard when one of the buttons is pushed, this button is functioning properly.

HINT:

If SEEK UP button is pressed, the system will enter into the service check mode.

(c) Service check mode:
  (1) During the element lighting mode, push SEEK UP button. Then, the audio system enters into the service check mode.
  (2) Check the error codes on the LCD.

HINT:

- The present and past conditions of the components can be checked by performing the System Check and collecting the stored DTC memories.
- There are 6 types of error codes: ”good”, ”nCon”, ”CHEC”, ”ECHn”, ”Old” and ”nrES”.
  - good (Good):
    No DTC is detected by both ”System Check Confirmation” command and ”Diagnosis Memory Response” command.
  - nCon (No Connection):
    There is a component which does not respond to the ”Diagnosis On Instruction” command. This error code is applicable to only the system where the connected components are limited to be used.
  - ECHn (Exchange):
    Application of new diagnosis version has been confirmed by the ”Diagnosis On Check” command. One or more DTC which indicates ”Replacement” has been detected by the ”System Check Result Response” command or the ”Diagnosis Memory Response” command.
  - CHEC (Check):
    Application of the new diagnosis version has been confirmed by the ”Diagnosis On Check” command. No DTC which indicates ”Replacement” has been detected by the ”System Check Result Response” command, or the ”Diagnosis Memory Response” command, but one or more DTC which indicated ”Check” has been detected.
  - Old (Old):
    Application of old diagnosis version has been confirmed by the ”Diagnosis On Check” command. DTC has been detected by the ”System Check Result Response” command or the ”Diagnosis Memory Response” command.
  - nrES (No response):
    No response has been identified by the ”System Check Start Instruction” command, the ”Request for System Check Result” command or the ”Request for Diagnosis Memory” command.

(d) Display Screen for Service Check.

Example:

Connection parts (physical address): Radio Receiver (P190), CD changer (P360)

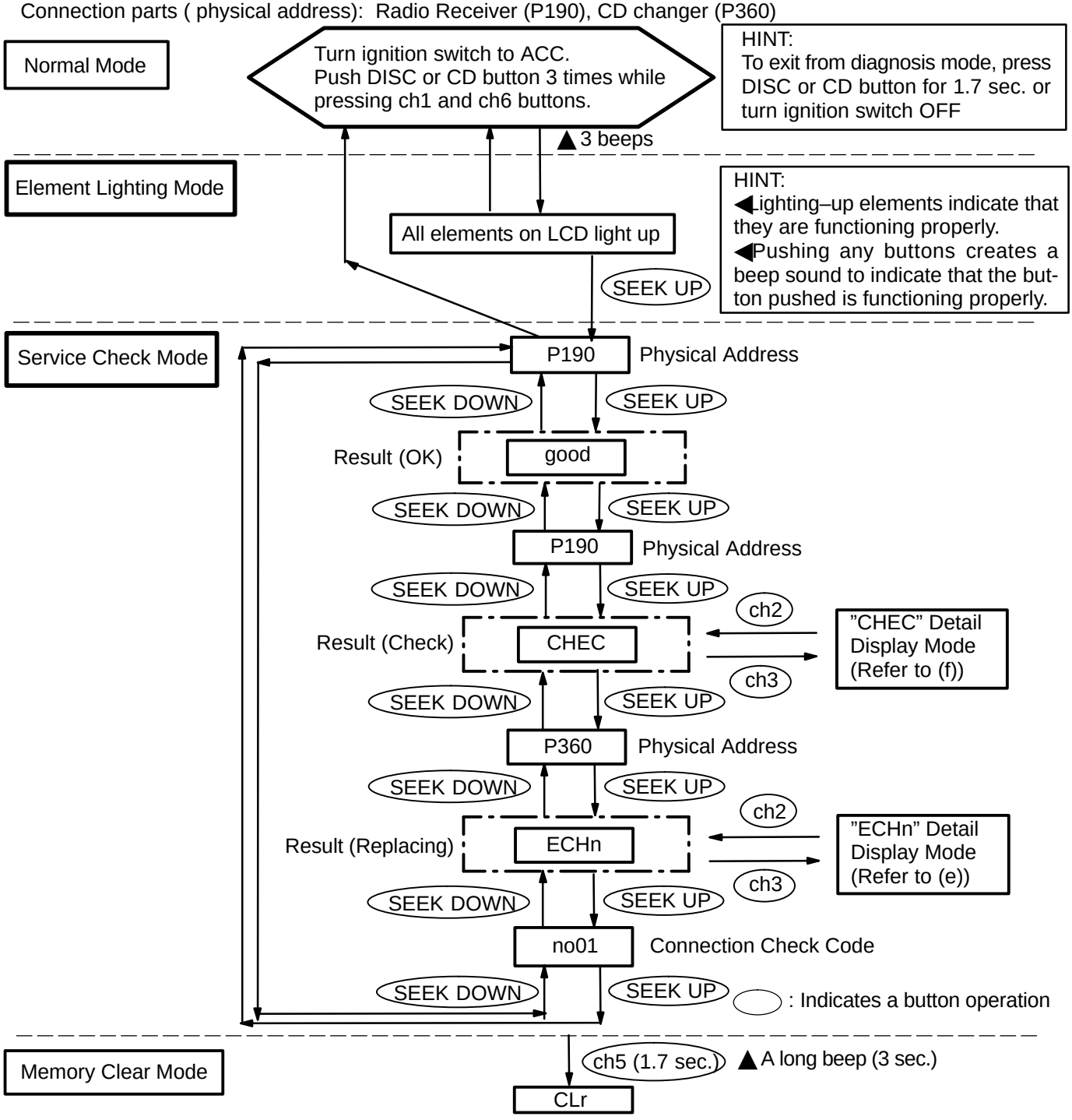

HINT:

- If diagnosis memory is cleared during service check mode, diagnosis information of all components will be cleared and system will return to service check mode (Refer to (i)).
- After the memory is cleared, only the physical address is displayed cyclically.
- When re–checking (ch1 button is pressed) in that condition, the result is also displayed as shown above.

(e) ”ECHn” Detail Display Mode Screen

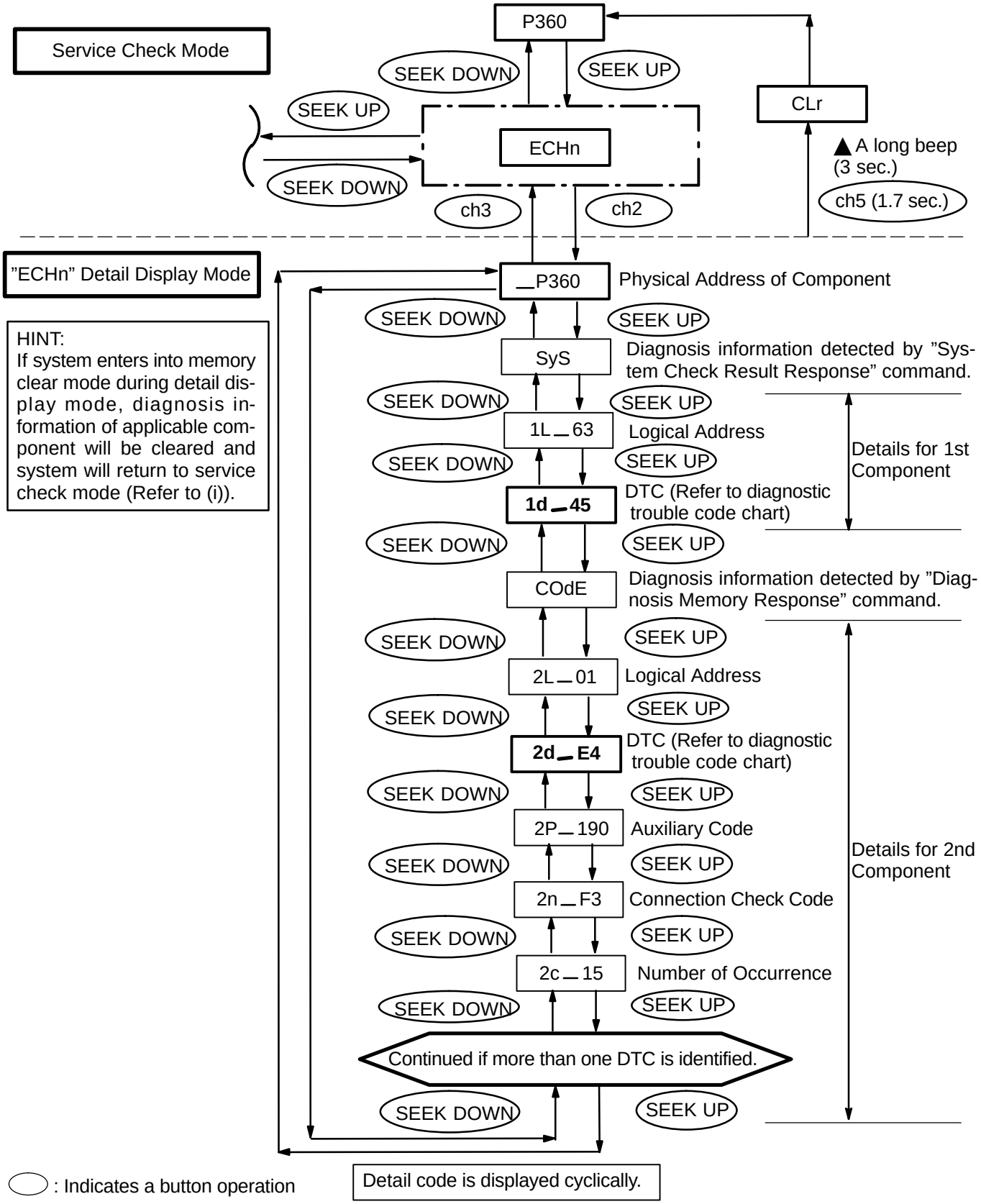

(f) ”CHEC” Detail Display Mode Screen

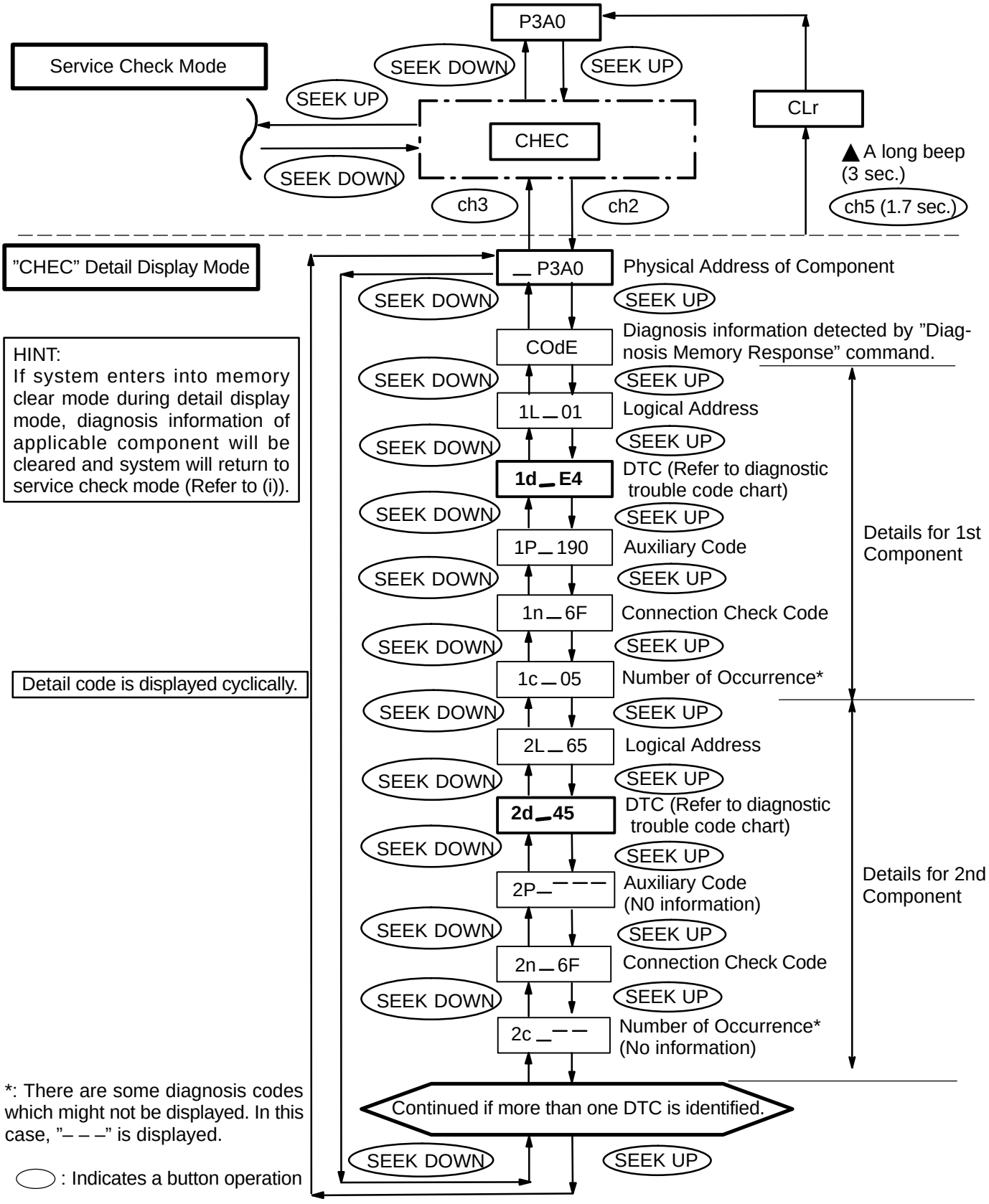

(g) ”OLD” Detail Display Mode Screen

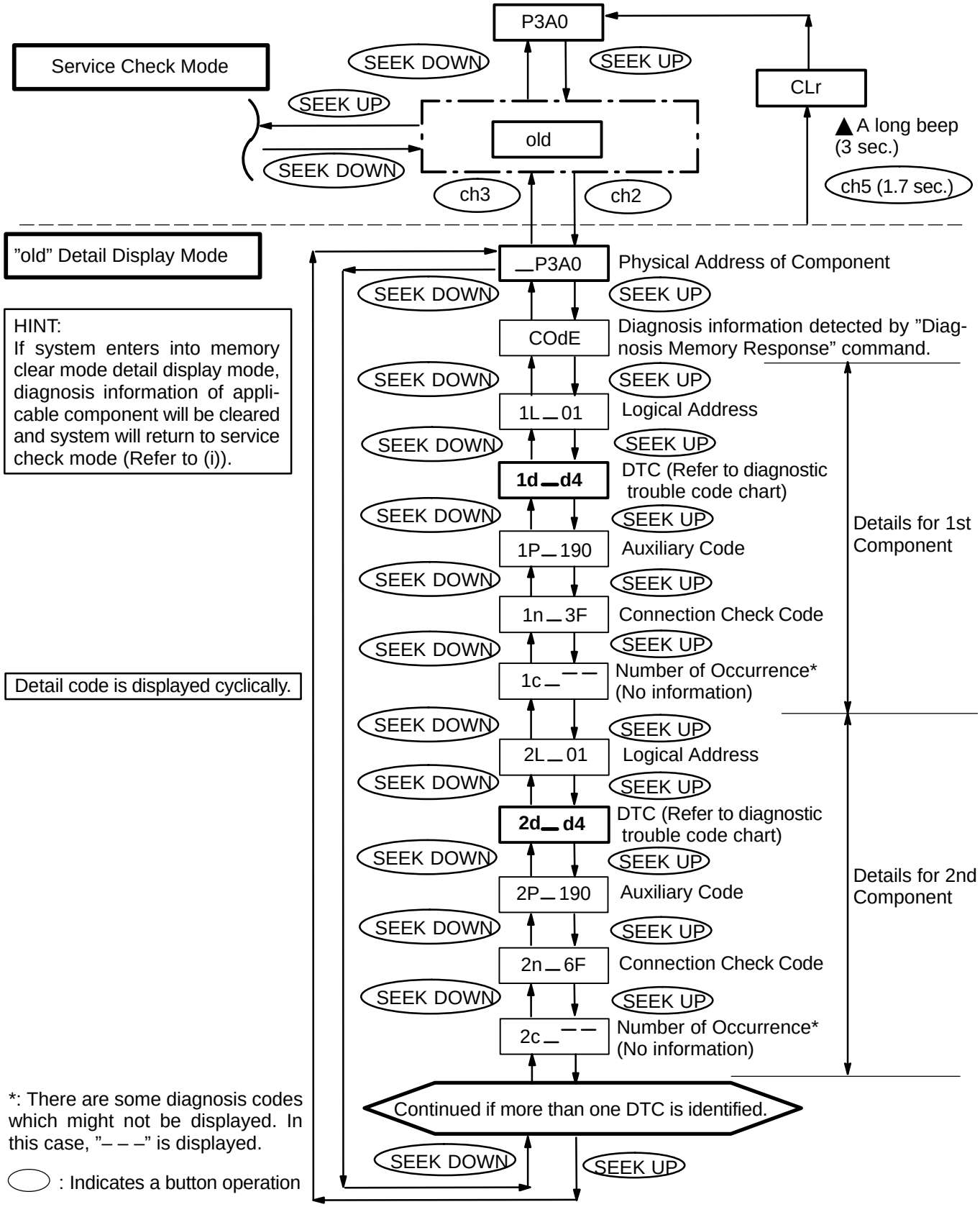

(h) Recheck:
To perform a recheck, push ch1 during the service check mode.

HINT:
For the recheck process, refer to the the Display Screen for Service Check (step d).

(i) Memory clear mode:
(1) Clear the diagnosis memory during Service Check Mode:
Push ch5 for 1.7 sec. during the service check mode. Then the diagnosis information of all the components is cleared and a beep sound is heard for 3 sec.

HINT:
- After the diagnosis information has been cleared, the system returns to the service check mode and only the physical addresses of all the connected components are displayed.
- Since all the diagnosis information is cleared, no error code is displayed.
- If a recheck is executed under this condition, the check results will be displayed as usual.

(2) Clear the diagnosis memory during Detail Display Mode:
Push ch5 for 1.7 sec. during the detail display modes. Then the diagnosis information of applicable component is cleared and a beep sound is heard for 3 sec.

HINT:
- After the diagnosis information has been cleared, the system returns to the service check mode and only the physical addresses of the applicable component is displayed.
- Since all the diagnosis information is cleared, no error code is displayed.
- If a recheck is executed under this condition, the check results will be displayed as usual.

(j) Separate display of ”System Check Result Response” command and ”Diagnosis Memory Response” command:

HINT:
During the detail display modes, diagnosis information detected by both the ”System Check Result Response” command and ”Diagnosis Memory Response” command is displayed separately.

(1) For display of the diagnosis information detected by the ”System Check Result Response” command, ”SyS is displayed at first, and then detailed information (multiple codes) are displayed in order.
(2) For display of the diagnosis information detected by the ”Diagnosis Memory Response” command, ”COdE” is displayed at first, and then detailed information (multiple codes) are displayed in order.

2. DIAGNOSTIC TROUBLE CODE LIST

Terms	Meaning
Physical address	Three–digit code (shown in hexadecimal) which is given to each component comprising the AVC–LAN. Corresponding to the function, individual symbols are specified.
Logical address	Two–digit code (shown in hexadecimal) which is given to each function comprising the inner system of the AVC–LAN.

(a) Physical address: 190 Radio receiver assembly

HINT:

- ◀ *1: Even if no failure is detected, it may be stored depending on the battery condition or voltage for starting the engine.
- ◀ *2: It is stored when 180 seconds have passed after the power supply connector is pulled out after the engine is started.
- ◀ *3: It may be stored when the ignition key is turned 1 minute again the after engine is started.
- ◀ *4: It may be stored when the ignition key is turned again after the engine is started.
- ◀ *5: When 210 seconds have passed after disconnecting the power supply connector of the master component with the ignition switch in ACC or ON, this code is stored.

(1) Logical address: 01 (Communication control)

DTC	Diagnosis item	Diagnosis content	Countermeasure and inspected parts
D6 *1	Absence of Master	Component in which this code is recorded has been disconnected from system with ignition in ACC or ON. Or, when this code was recorded, multi–display assembly was disconnected.	◀Check harness for power supply system of radio receiver assembly. ◀Check harness for communication system of radio receiver assembly.
D8 *2	No Response to Connection Check	Component shown by auxiliary code is or had been disconnected from system after engine is start.	◀Check harness for power supply system of component shown by auxiliary code. ◀Check harness for communication system of component shown by auxiliary code.
D9 *1	Last Mode Error	Component operated (sounds and/or images were provided) before engine stop is or has been disconnected with ignition switch in ACC or ON.	◀Check harness for power supply system of component shown by auxiliary code. ◀Check harness for communication system of component shown by auxiliary code.
DA	No Response to ON/OFF Instruction	No response is identified when changing mode (audio and visual mode change). Detected when sound and picture does not change by button operation.	◀Check harness for power supply system of component shown by auxiliary code. ◀Check harness for communication system of component shown by auxiliary code. ◀If error occurs again, replace component shown by auxiliary code.
DB *1	Mode Status Error	Dual alarm is detected.	◀Check harness for power supply of component shown by auxiliary code. ◀Check harness for communication system of component shown by auxiliary code.
DC *3	Transmission Error	Transmission to component shown by auxiliary code has been failed. (Detecting this DTC does not necessarily mean actual failure.)	If same auxiliary code is recorded in order component, check harness for power supply and communication system of all components shown by code. (If not, delete DTC and recheck)

DD *4	Master Reset (Momentary Interruption)	After engine is started, radio receiver assembly was disconnected from system.	◀Check harness for power supply system of radio receiver assembly. ◀Check harness for communication system of radio receiver assembly. ◀If this error occurs frequently, replace radio receiver assembly.
DE *4	Slave Reset (Momentary Interruption)	After engine is started, slave component was disconnected from system.	◀Check harness for power supply of component shown by auxiliary code. ◀Check harness for communication system of component shown by auxiliary code.
DF *5	Master Error	Due to defective condition of component with a display, master function is switched to audio equipment. Error occurs in communication between sub–master (audio) and master component.	◀Check harness for power supply of radio receiver assembly. ◀Check harness for communication system of radio receiver assembly. ◀Check harness for communication system between radio receiver assembly and sub–master component.
E0 *1	Registration Completion Instruction Error	”Registration Completion Instruction” command from master cannot be received.	Since this DTC is provided for engineering purpose, it may be detected when no actual failure exists.
E1 *1	Audio Processor ON Error	While source equipment is operating, AMP output is stopped.	◀Check harness for power supply of radio receiver assembly. ◀Check harness for communication system of radio receiver assembly.
E2	ON/OFF Instruction Parameter Error	Error occurs in ON/OFF controlling command from radio receiver assembly.	Replace radio receiver assembly.
E3 *1	Registration Request Transmission	Registration Request command is output from slave component. Receiving Connection Check Instruction, Registration Request command is output from sub–master component.	Since this DTC is provided for engineering purpose, it may be detected when no actual failure exists.
E4 *1	Multiple Frame Abort	Multiple frame transmission is aborted.	Since this DTC is provided for engineering purpose, it may be detected when no actual failure exists.

(2) Logical address: 61 (Cassette switch)

DTC	Diagnosis item	Diagnosis content	Countermeasure and inspected parts
40	Mechanical of Media Error	Malfunction due to mechanical failure is identified. Or cassette tape is cut or entangled.	◀Inspect cassette tape. ◀Replace radio receiver assembly.
41	EJECT Error	Malfunction due to mechanical failure.	Replace radio receiver assembly.
42	Tape caught in radio receiver assembly	hub lock etc.	Inspect cassette tape.

(3) Logical address: 62 (CD player)

DTC	Diagnosis item	Diagnosis content	Countermeasure and inspected parts
42	No Disc Readout	Disc cannot be read	◀Inspect CD. ◀Replace radio receiver assembly.
44	CD Player Error	Error is detected in CD player.	Replace radio receiver assembly.
45	Eject Error	Magazine cannot be ejected.	Replace radio receiver assembly.
46	Scratched/Reversed Disc	Scratches or dirt is found on CD surface or CD is set with upside down.	Inspect CD.

(4) Logical address: 63 (CD changer)

DTC	Diagnosis item	Diagnosis content	Countermeasure and inspected parts
42	No Disc Readout	Disc cannot be read	◀Inspect CD. ◀Replace radio receiver assembly.
44	CD Player Error	Error is detected in CD player.	Replace radio receiver assembly.
45	Eject Error	Magazine cannot be ejected.	Replace radio receiver assembly.
46	Scratched/Reversed Disc	Scratches or dirt is found on CD surface or CD is set with upside down.	Inspect CD.
51	CD Changer Elevator Error	Mechanical error occurred during elevator operation.	Replace radio receiver assembly.
52	CD Changer Clump Error	Failure in disc clamping or clamp error.	Replace radio receiver assembly.

(b) Physical address: 440 Stereo component amplifier

HINT:

- ◀ *1: Even if no failure is detected, it may be stored depending on the battery condition or voltage for starting the engine.
- ◀ *2: It may be stored when the ignition key is turned 1 minute again after the engine is started.
- ◀ *3: It may be stored when the ignition key is turned again after the engine is started.
- ◀ *4: When 210 seconds have passed after disconnecting the power supply connector of the master component with the ignition switch in ACC or ON, this code is stored.

Logical address: 01 (Communication control)

DTC	Diagnosis item	Diagnosis content	Countermeasure and inspected parts
D6 *1	Absence of Master	Component in which this code is recorded has been disconnected from system with ignition in ACC or ON. Or, when this code was recorded, multi–display assembly was disconnected.	◀Check harness for power supply of radio receiver assembly. ◀Check harness for communication system of radio receiver assembly. ◀Check harness for power supply of stereo component amplifier. ◀Check harness for communication system of stereo component amplifier.
D7	Communication Check Error	Component in which this code is recorded is or was disconnected from system after engine start. Or, when recording this code, multi–display assembly was disconnected.	◀Check harness for power supply of radio receiver assembly. ◀Check harness for communication system of radio receiver assembly. ◀Check harness for power supply of stereo component amplifier. ◀Check harness for communication system of stereo component amplifier.
DC *2	Transmission Error	Transmission to component shown by auxiliary code has been failed. (Detecting this DTC does not necessarily mean actual failure.)	If same auxiliary code is recorded in order component, check harness for power supply and communication system of all components shown by code.
DD *3	Master Reset (Momentary Interruption)	After engine is started, multi–display assembly was disconnected from system.	◀Check harness for power supply of radio receiver assembly. ◀Check harness for communication system of radio receiver assembly. ◀Check harness for power supply of stereo component amplifier. ◀Check harness for communication system of stereo component amplifier. ◀If this error occurs frequently, replace radio receiver assembly.

DF *4	Master Error	Due to defective condition of component with a display, master function is switched to audio equipment. Error occurs in communication between sub–master (audio) and master component.	◀Check harness for power supply of radio receiver assembly. ◀Check harness for communication system of radio receiver assembly. ◀Check harness for communication system between radio receiver assembly and sub–master component.
E0 *1	Registration Completion Instruction Error	”Registration Completion Instruction” command from master cannot be received.	Since this DTC is provided for engineering purpose, it may be detected when no actual failure exists.
E1 *1	Audio Processor ON Error	While source equipment is operating, AMP output is stopped.	◀Check harness for power supply of radio receiver assembly. ◀Check harness for communication system of radio receiver assembly.
E2	ON/OFF Instruction Parameter Error	Error occurs in ON/OFF controlling command from multi–display assembly.	Replace radio receiver assembly.
E3 *1	Registration Request Transmission	◀Registration Request command is output from slave component. ◀Registration Connection Check Instruction, Registration Request command is output from sub–master component.	Since this DTC is provided for engineering purpose, it may be detected when no actual failure exists.

(c) Physical address: 360 CD Changer

HINT:

- ◀ *1: Even if no failure is detected, it may be stored depending on the battery condition or voltage for starting the engine.
- ◀ *2: It may be stored when the ignition key is turned 1 minute again after the engine is started.
- ◀ *3: It may be stored when the ignition key is turned again after the engine is started.
- ◀ *4: It may be stored when the ignition key is turned again after the engine is started.
- ◀ *5: When 210 seconds have passed after disconnecting the power supply connector of the master component with the ignition switch in ACC or ON, this code is stored.

Logical address: 01 (Communication control)

DTC	Diagnosis item	Diagnosis content	Countermeasure and inspected parts
21	ROM Error	Abnormal condition of ROM is detected.	Replace CD auto changer.
22	RAM Error	Abnormal condition of ROM is detected.	Replace CD auto changer.
D6 *2	Absence of Master	Component in which this code is recorded is or was disconnected from system after engine start. Or, when recording this code, multi–display assembly was disconnected.	◀Check harness for power supply system of radio receiver assembly. ◀Check harness for communication system of radio receiver assembly. ◀Check harness for power supply system of CD auto changer ◀Check harness for communication system CD auto changer
D7 *5	Connection Check Error	Component in which this code is recorded is or was disconnected from system after engine start. Or, when recording this code, multi–display assembly was disconnected.	◀Check harness for power supply of radio receiver assembly. ◀Check harness for communication system of radio receiver assembly. ◀Check harness for power supply of CD auto changer. ◀Check harness for communication system of CD auto changer.
DC *2	Transmission Error	Transmission to component shown by auxiliary code has been failed. (Detecting this DTC does not necessarily mean actual failure.)	If same auxiliary code is recorded in order component, check harness for power supply and communication system of all components shown by code.

DD *3	Master Reset (Momentary Interruption)	After engine is started, multi–display assembly was disconnected from system.	◀Check harness for power supply system of radio receiver assembly. ◀Check harness for communication system radio receiver assembly. ◀Check harness for power supply system of CD auto changer. ◀Check harness for communication system CD auto changer. ◀If this error occurs frequently, replace radio receiver assembly.
DF *4	Master Error	Due to defective condition of component with a display, master function is switched to audio equipment. Error occurs in communication between sub–master (audio) and master component.	◀Check harness for power supply of radio receiver assembly. ◀Check harness for communication system of radio receiver assembly. ◀Check harness for communication system between radio receiver assembly and sub–master component.
E0 *1	Registration Completion Instruction Error	”Registration Completion Instruction” command from master cannot be received.	Since this DTC is provided for engineering, it may be detected when no actual failure exists.
E2	ON/OFF Instruction Parameter Error	Error occurs in ON/OFF controlling command from multi–display assembly.	Replace radio receiver assembly.
E3 *1	Registration Request Transmission	◀Registration Request command is output from slave component. ◀Receiving Connection Check Instruction, Registration Request command is output from sub–master component.	Since this DTC is provided for engineering purpose, it may be detected when no actual failure exists.
E4 *1	Multiple Frame Abort	Multiple frame transmission is aborted.	Since this DTC is provided for engineering purpose, it may be detected when no actual failure exists.

3. PROBLEM SYMPTOMS TABLE

NOTICE:

When replacing the internal mechanism (computer part) of the audio system, be careful that no part of your body or clothing comes in contact with the terminals of the leads from the IC, etc. of the replacement part (spare part).

HINT:

This inspection procedure is a simple troubleshooting which should be carried out on the vehicle while the system is operating on the assumption that the system component has troubles (except for the wires and connectors, etc.).

Take the following items into consideration during inspection.

- ◀ Open or short circuit of the wire harness
- ◀ Connector or terminal connection fault

	Problem	No.
Radio	Radio does not operate when power switch is turned to 'ON'.	1
	Display indicates when power switch is turned to 'ON', but no sound (including 'noise') is produced.	2
	Noise is present, but AM – FM does not operate.	3
	Any speaker does not work.	4
	Any AM or FM does not work.	5
	Few preset tuning bands.	5
	Reception is poor.	6
	Sound quality is poor.	7
	Preset memory disappears.	8
Tape Player	Cassette tape cannot be inserted.	9
	Cassette tape can be inserted, but no power is produced.	10
	Power comes in, but tape player does not operate.	11
	Any speaker does not work.	12
	Sound quality is poor.	13
	Tape is jammed, malfunction with tape speed or auto–reverse.	14
	Cassette tape can not be ejected.	15
CD Player	CD cannot be inserted.	16
	CD can be inserted, but no power is produced.	17
	Power comes in, but CD player does not operate.	18
	Sound jumps.	19
	Sound quality is poor (Volume faint).	20
	Any speaker does not work.	21
	CD can not be ejected.	22
Power Amplifier	No power comes in.	23
	Power comes in, but woofer (power) amplifier does not operating.	24
	Any speaker does not work.	25
Noise	Noise occurs	26
	Noise is produced by vibration or shock while driving.	27
	Noise is produced when engine starts.	28

The term "AM" includes LW, MW and SW, and the term "FW" includes UKW.

1	Radio	RADIO DOES NOT OPERATE WHEN POWER SWITCH IS TURNED TO ”ON”

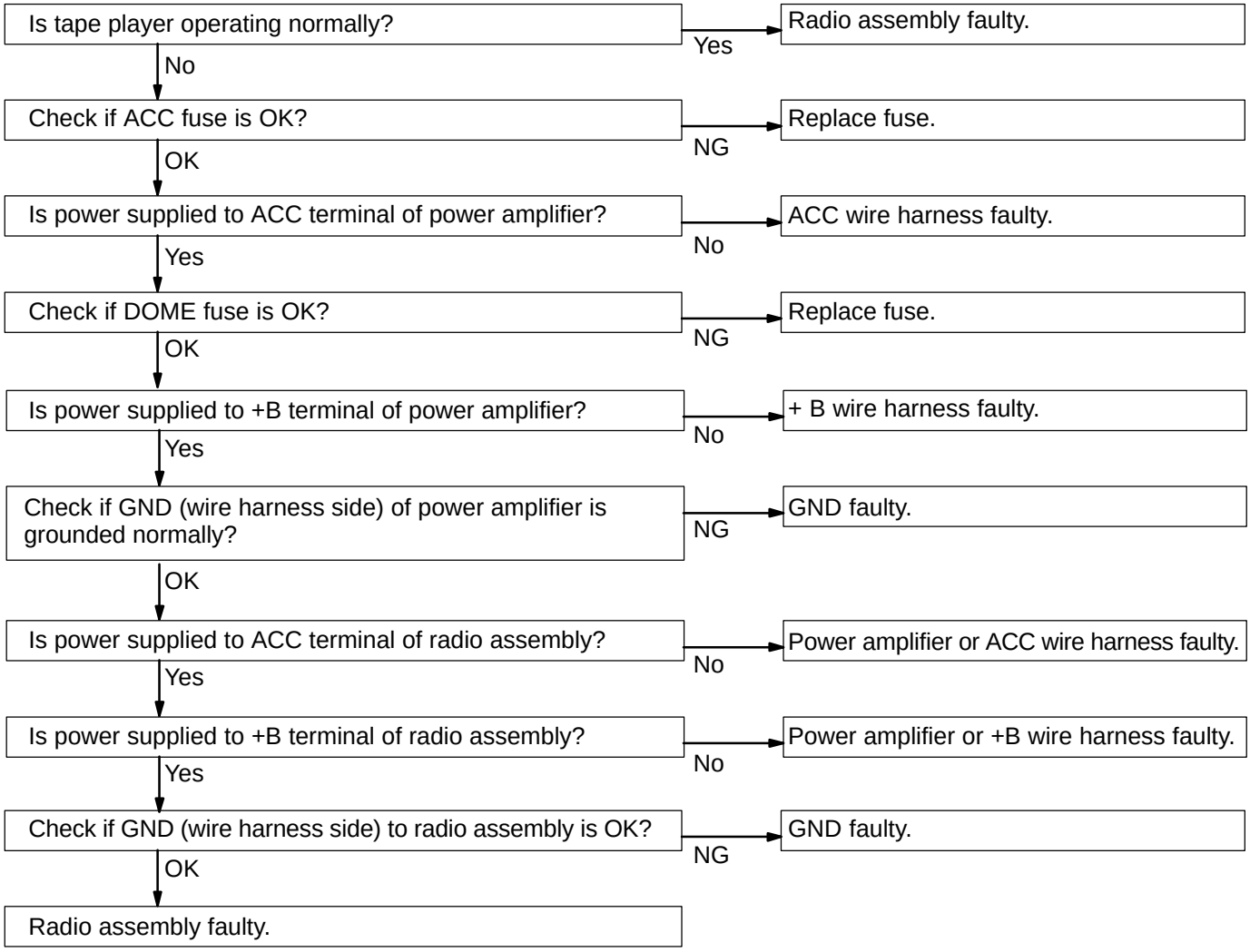

2	Radio	DISPLAY INDICATES WHEN POWER SWITCH is TURNED TO ”ON”, BUT NO SOUND (INCLUDING ”NOISE”) IS PRODUCED

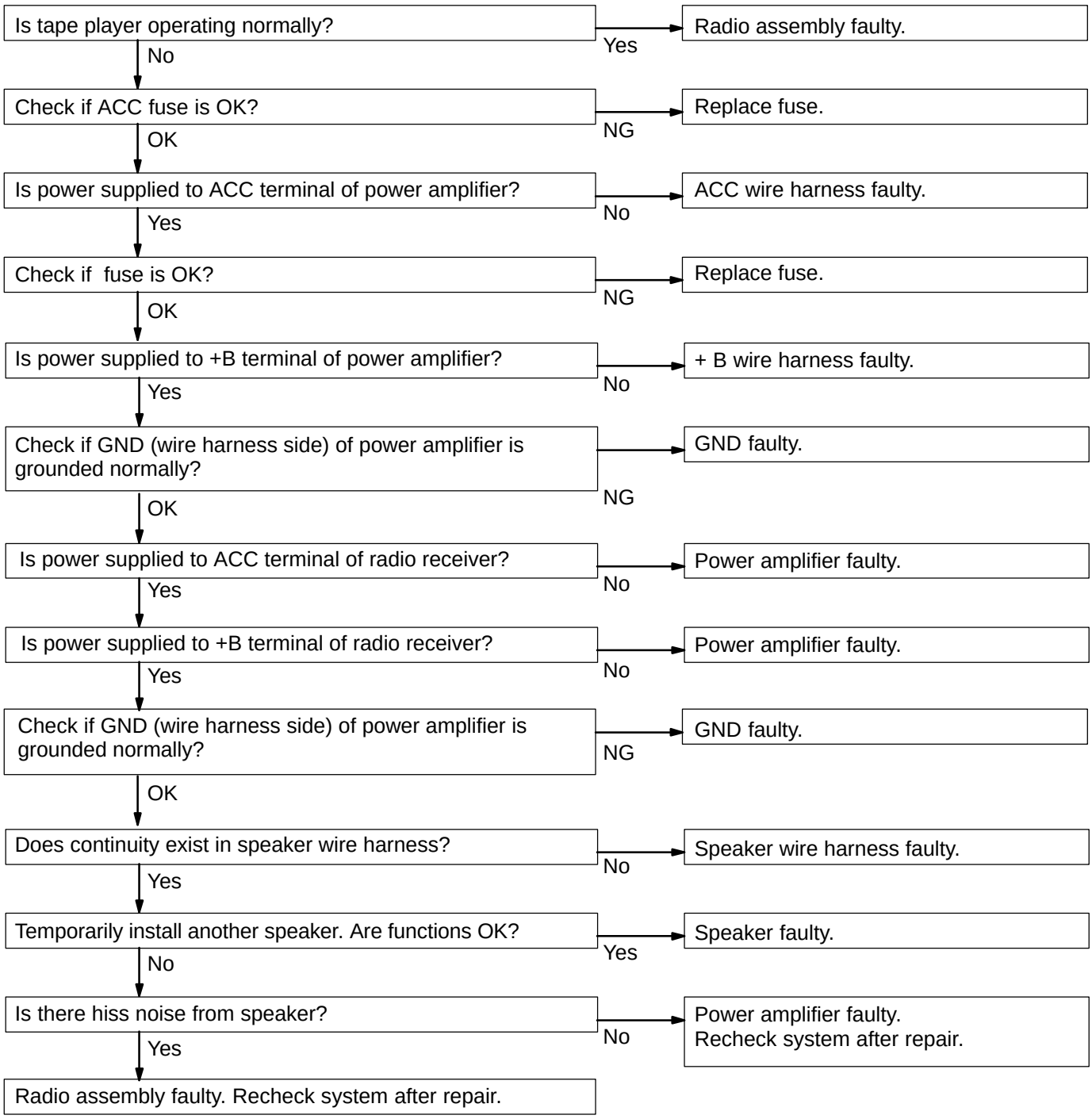

3	Radio	NOISE IS PRESENT, BUT AM–FM DOES NOT OPERATE

Go to No.25

If radio side faulty. → Radio faulty.

4	Radio	ANY SPEAKER DOSE NOT WORK

Is tape player operating normally?
- Yes → Radio assembly faulty.
- No ↓

Is hiss noise produced by non–functioning speaker?
- Yes → Radio assembly faulty. Recheck system after repair.
- No ↓

Does continuity exist in speaker wire harness?
- No → Speaker wire harness faulty.
- Yes ↓

Temporarily install another speaker. Are functions OK?
- Yes → Speaker faulty.
- No ↓

Power amplifier faulty. Recheck system after repair.

5	Radio	ANY AM OR FM DOES NOT WORK FEW PRESET TUNING BANDS

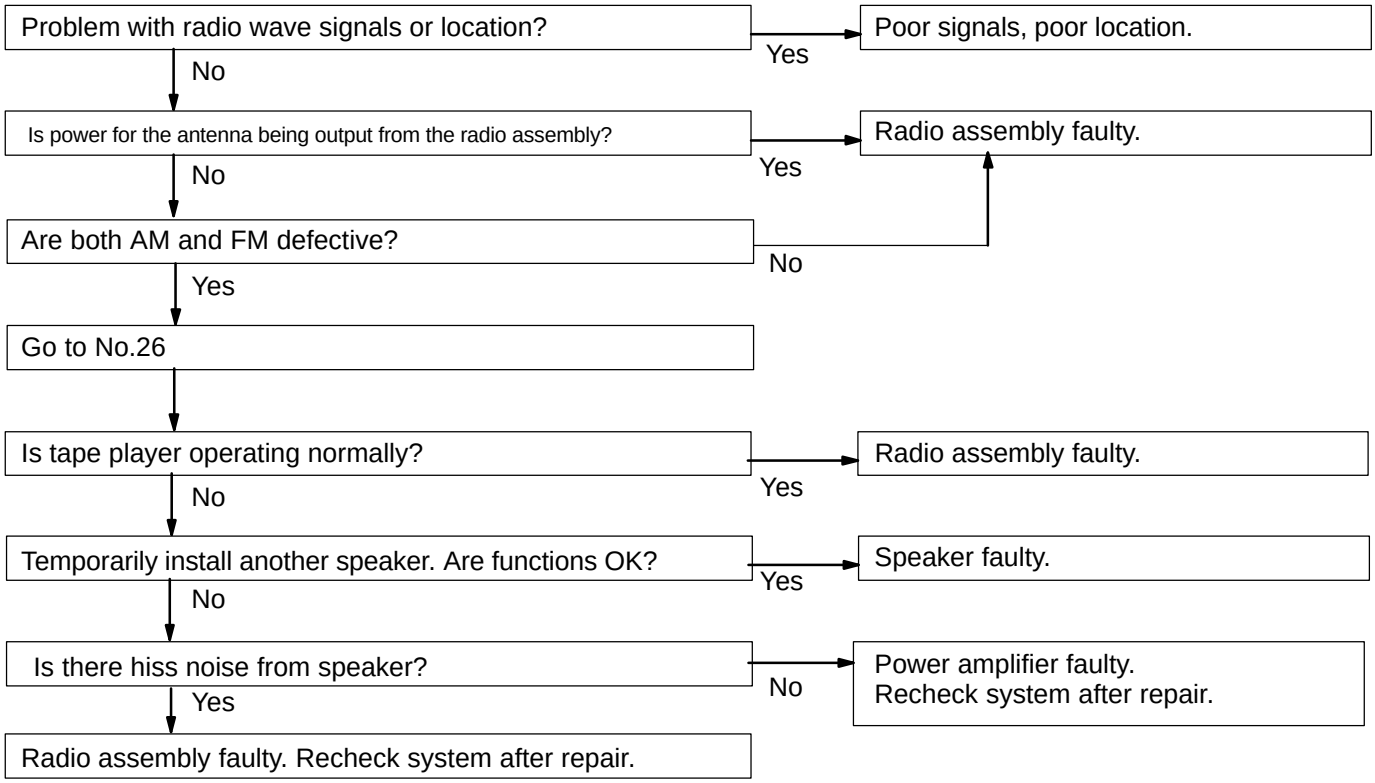

6	Radio	RECEPTION POOR

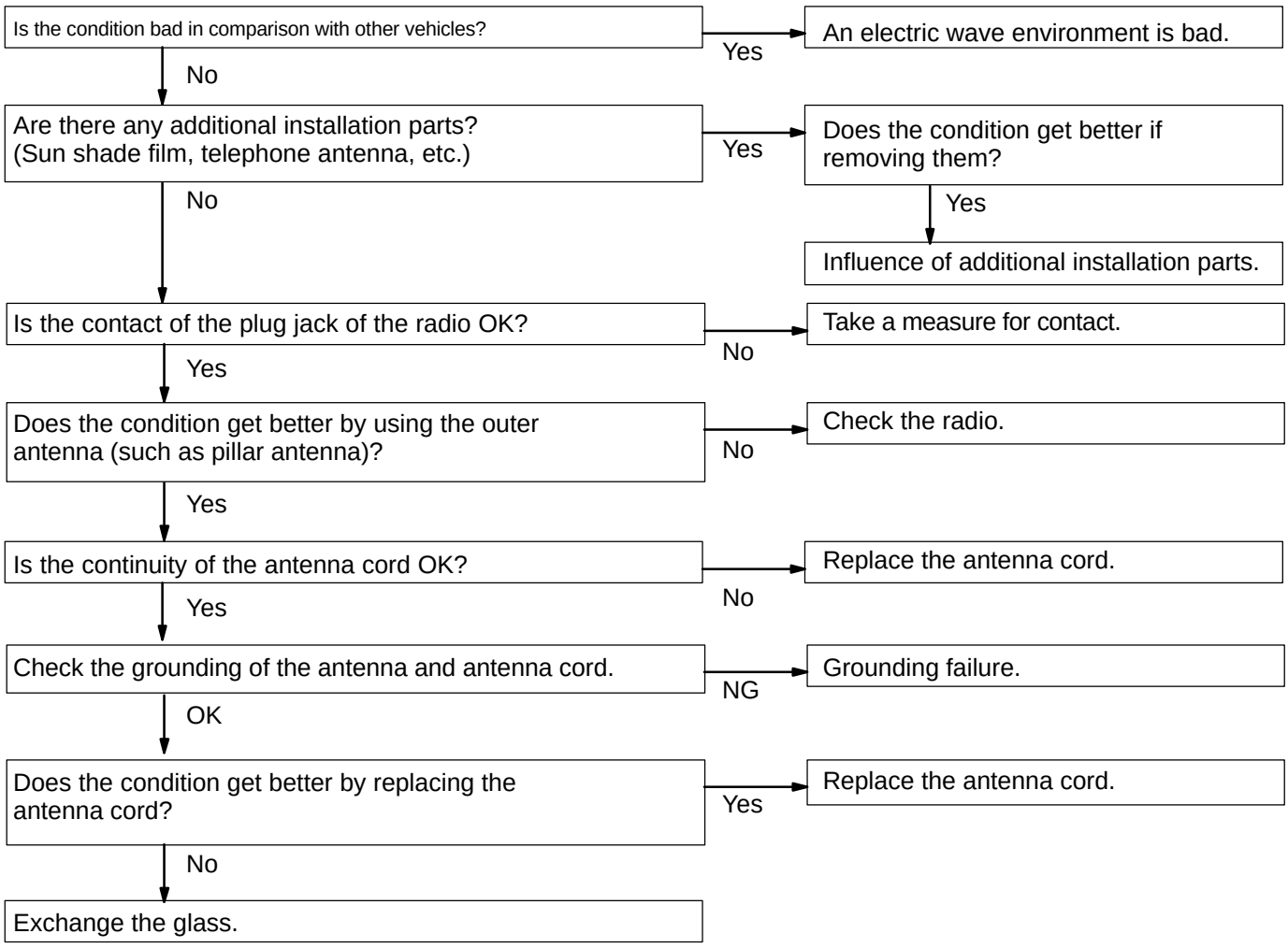

7	Radio	SOUND QUALITY IS POOR

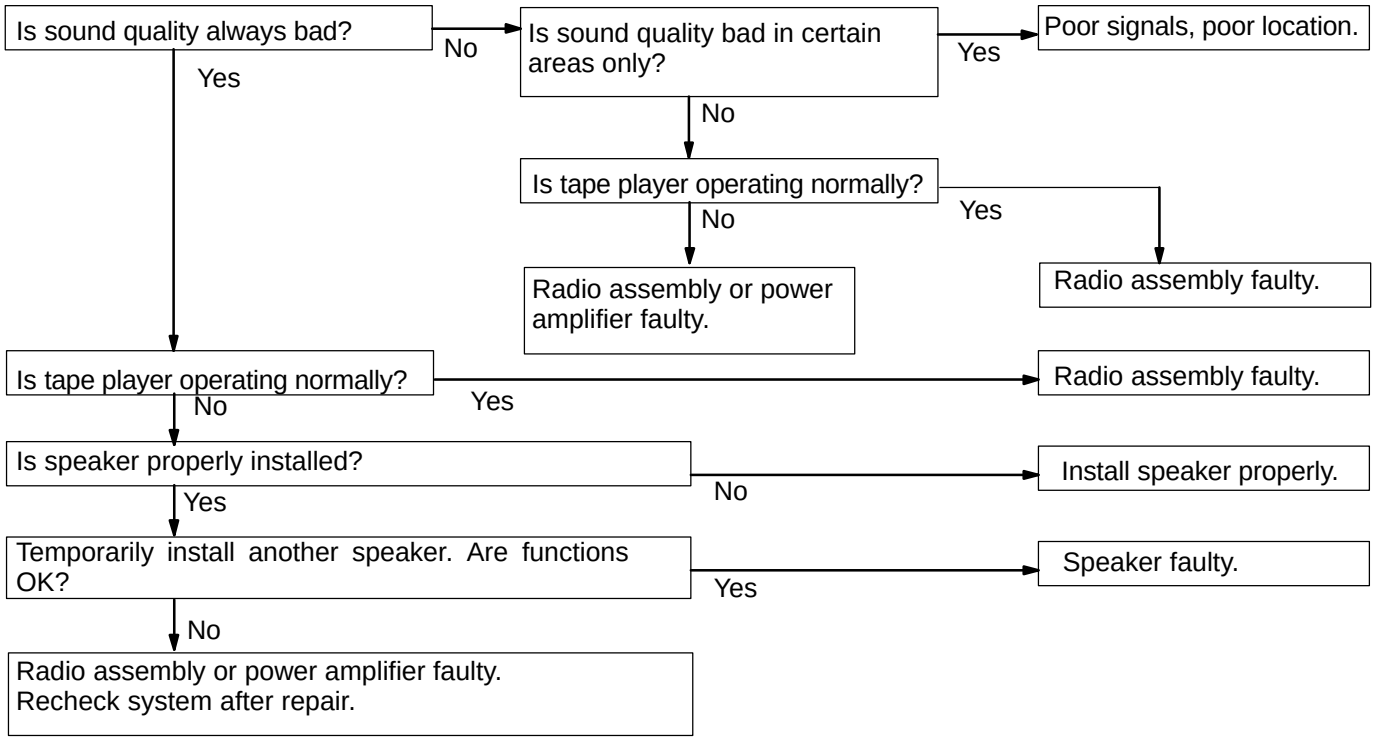

8	Radio	PRESET MEMORY DISAPPEARS

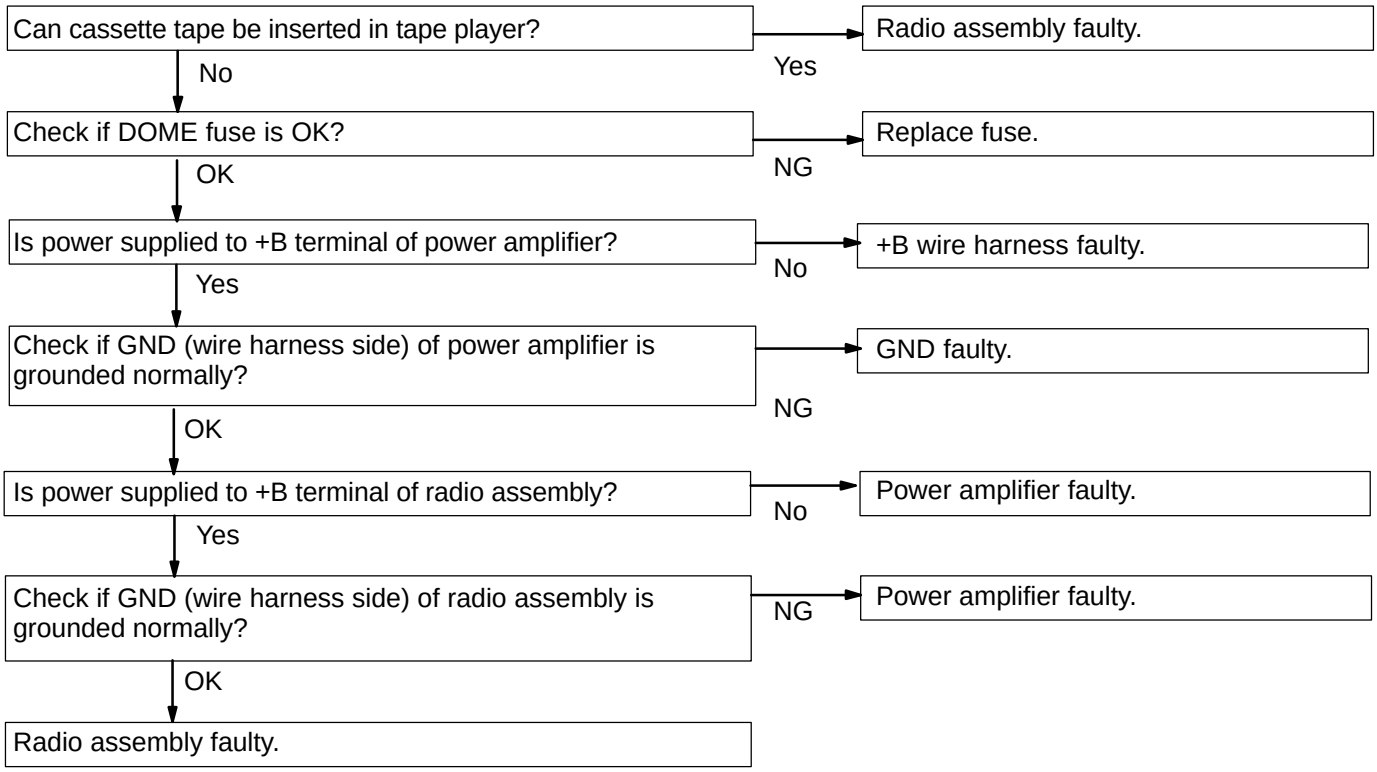

9	Tape Player	CASSETTE TAPE CANNOT BE INSERTED

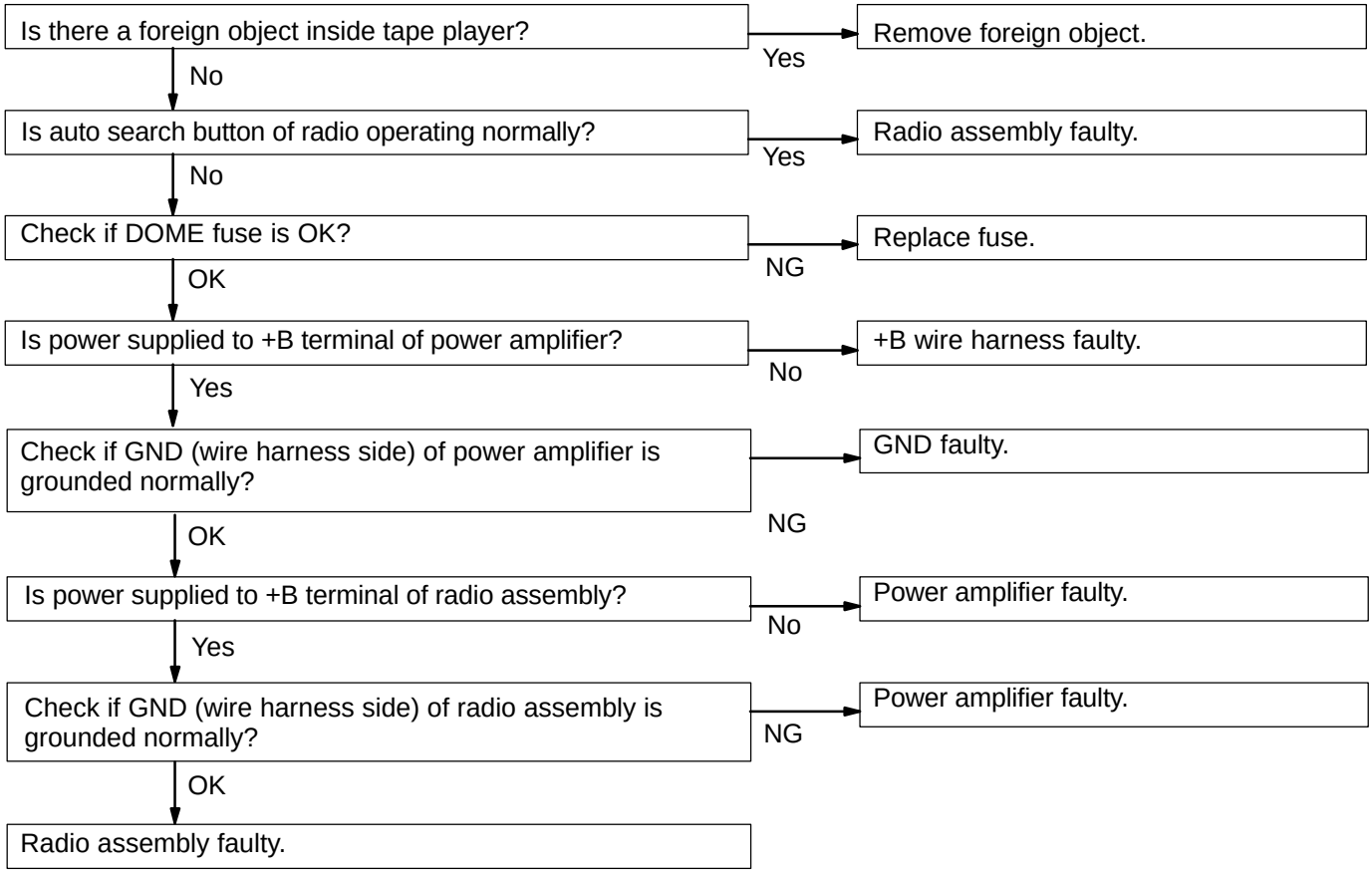

10	Tape Player	CASSETTE TAPE CAN BE INSERTED, BUT NO POWER IS PRODUCED

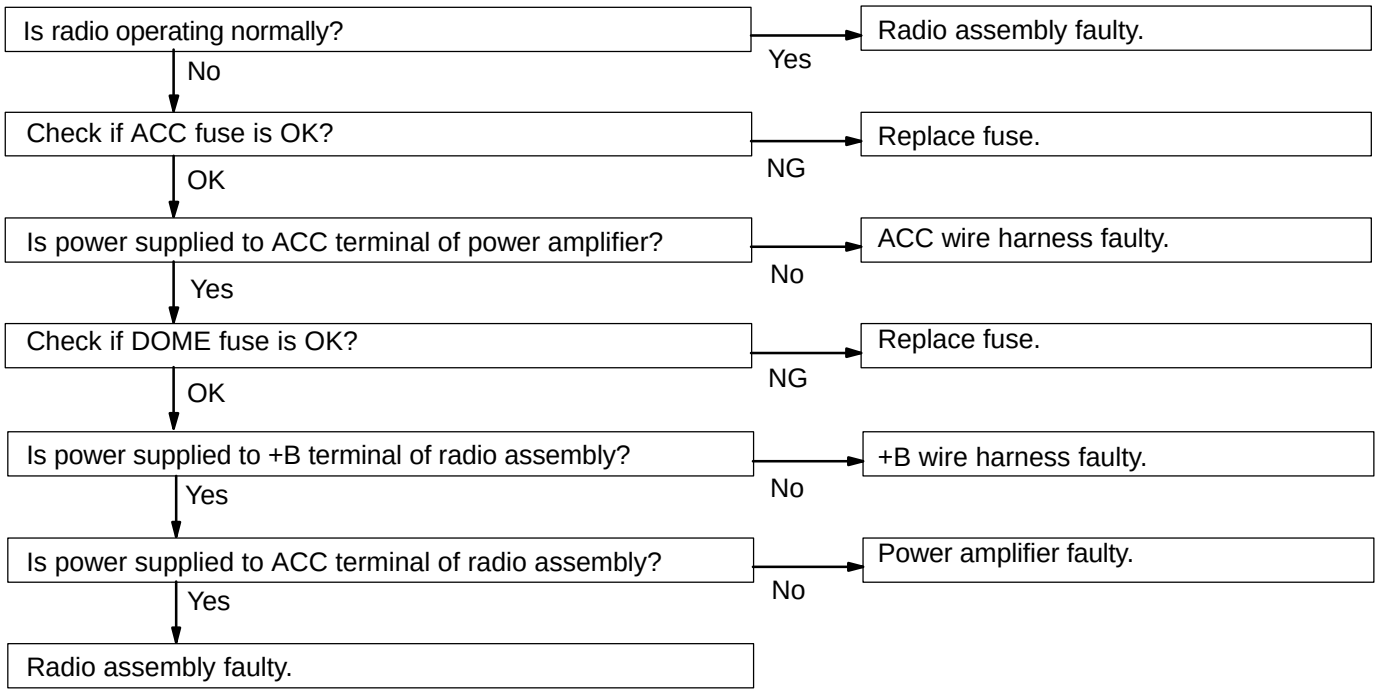

11	Tape Player	POWER COMES IN, BUT TAPE PLAYER DOES NOT OPERATE

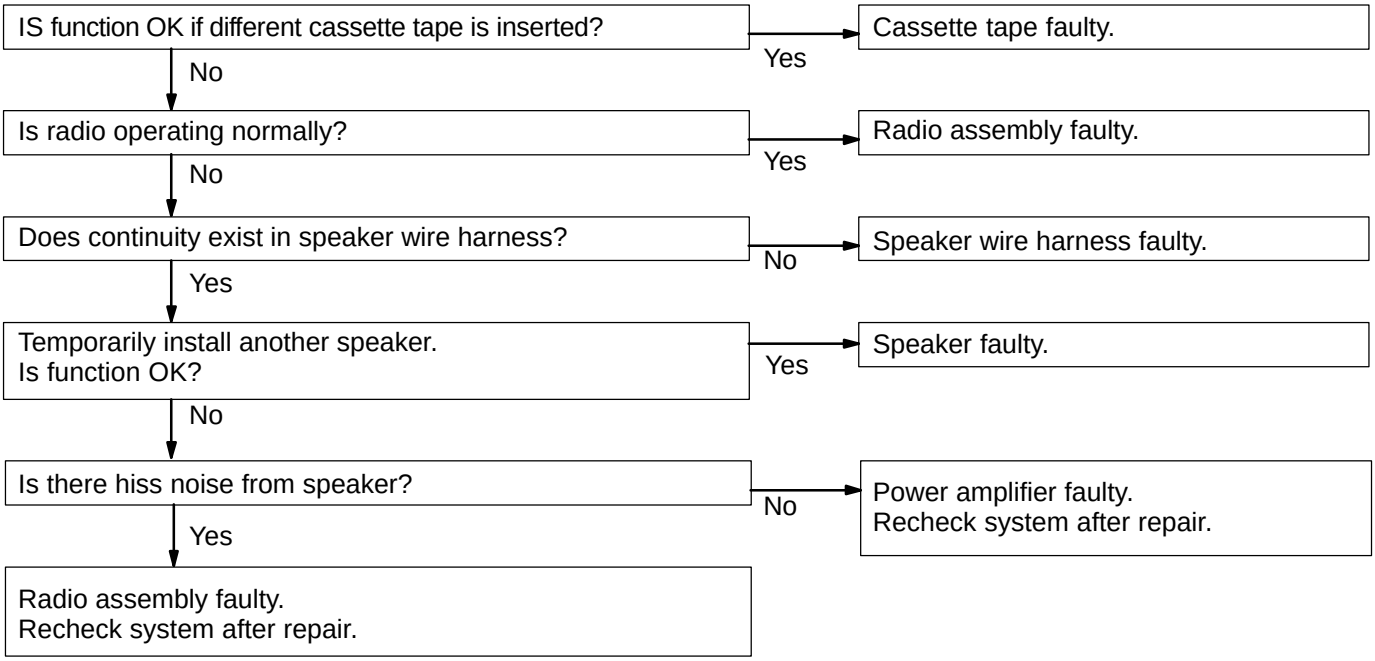

12	Tape Player	ANY SPEAKER DOES NOT WORK

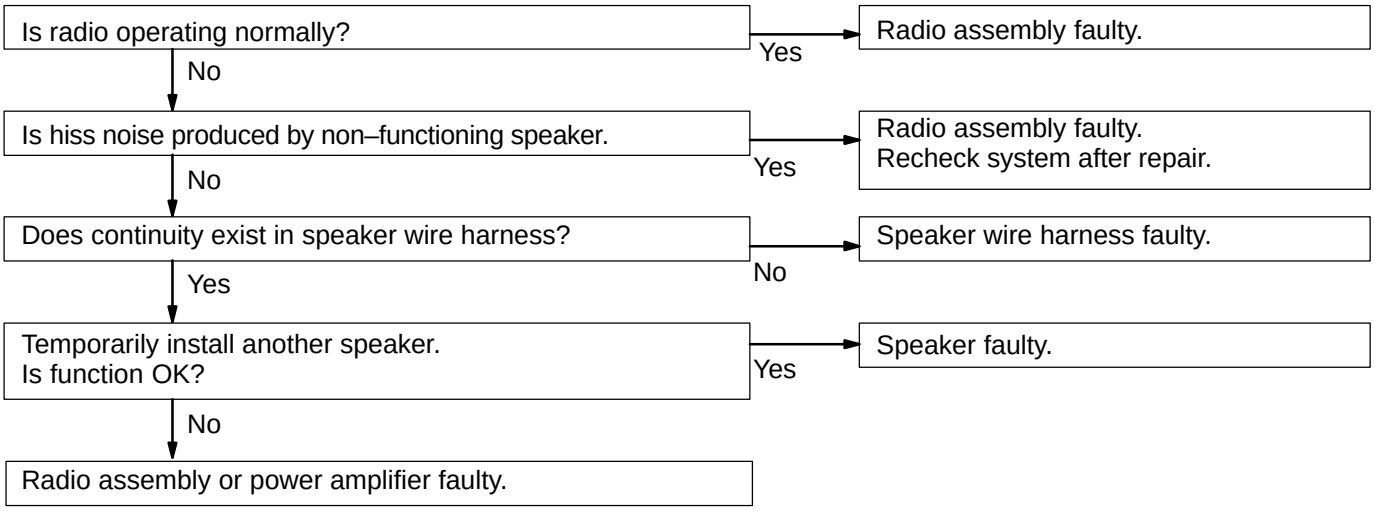

13	Tape Player	SOUND QUALITY IS POOR (VOLUME FAINT)

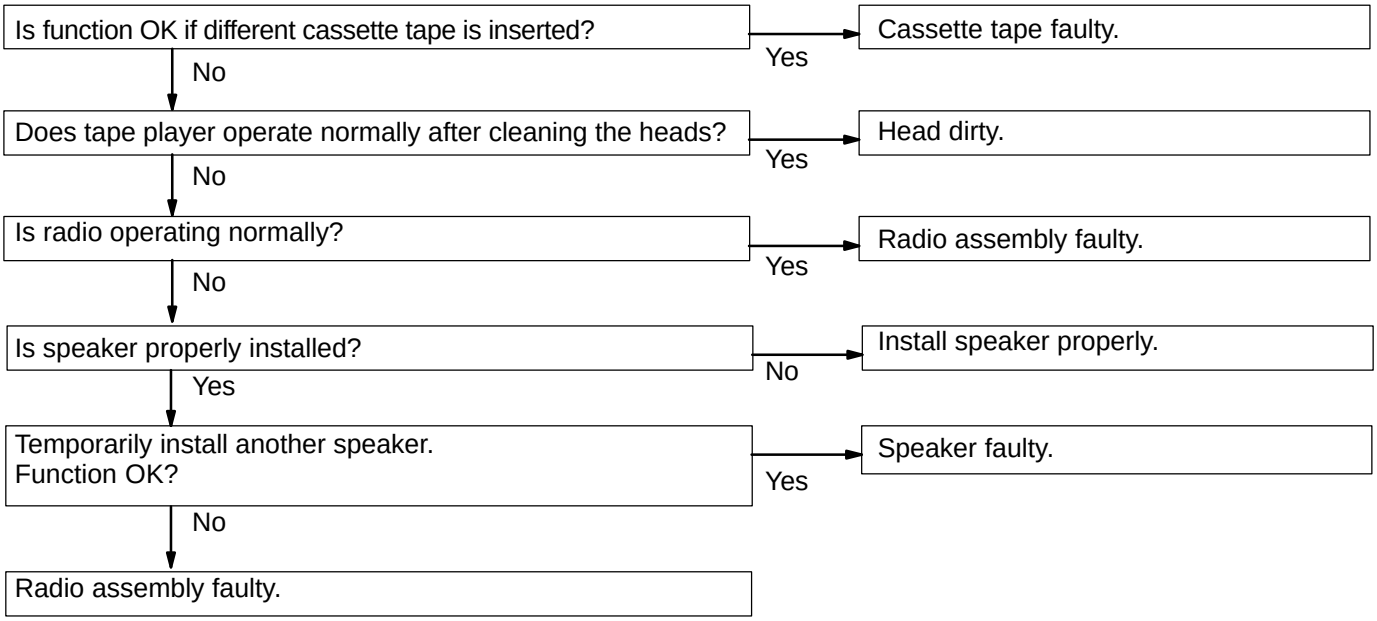

14	Tape Player	TAPE IS JAMMED, MALFUNCTION WITH TAPE SPEED OR AUTO–REVERSE

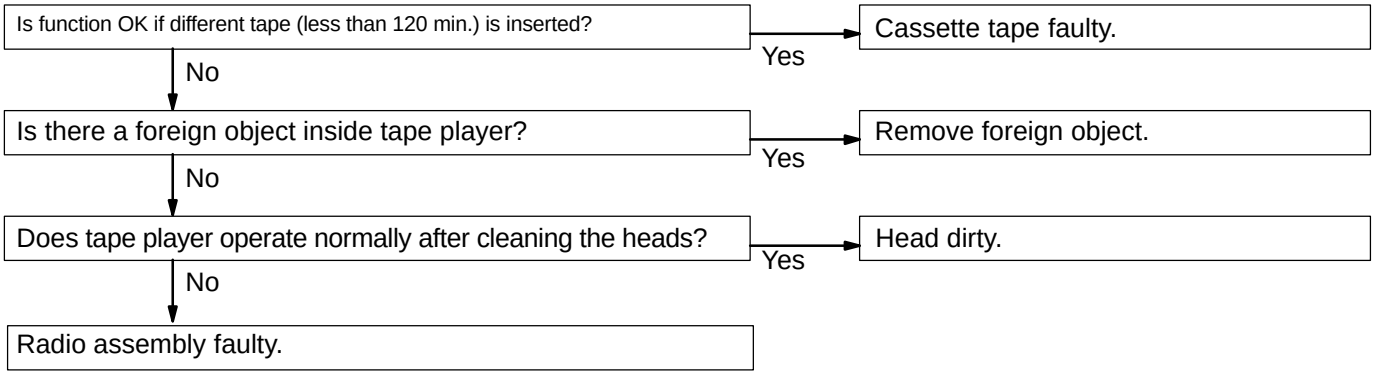

15	Tape Player	CASSETTE TAPE CAn NOT BE EJECTED

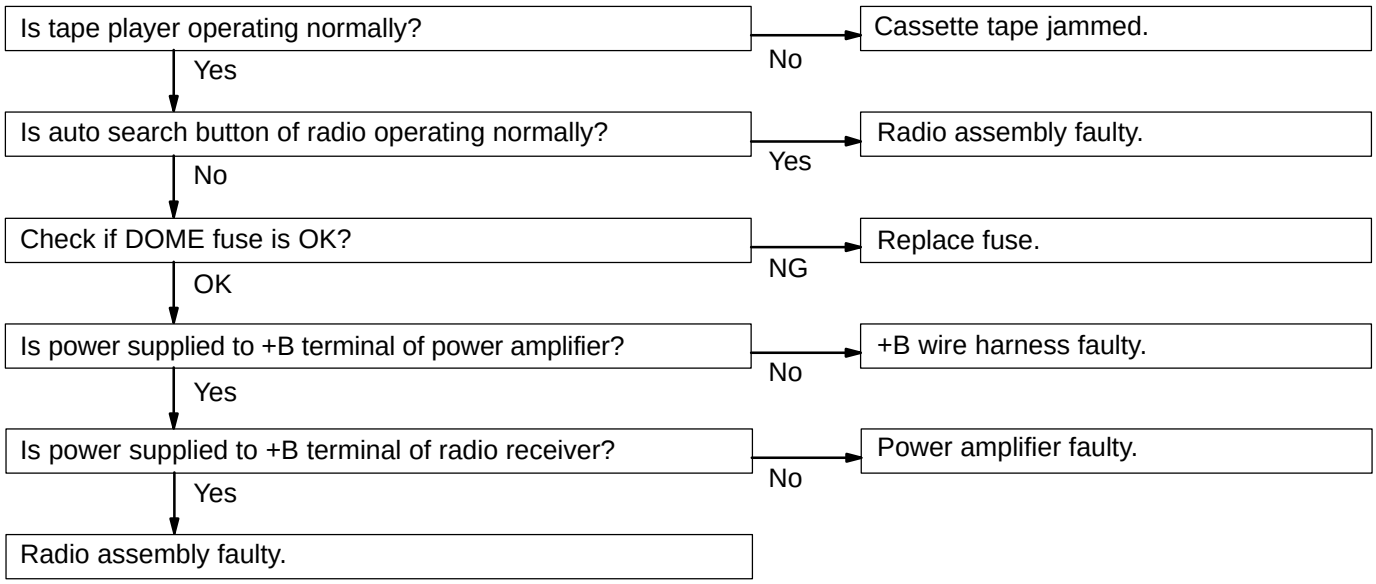

16	CD Player	CD CANNOT BE INSERTED

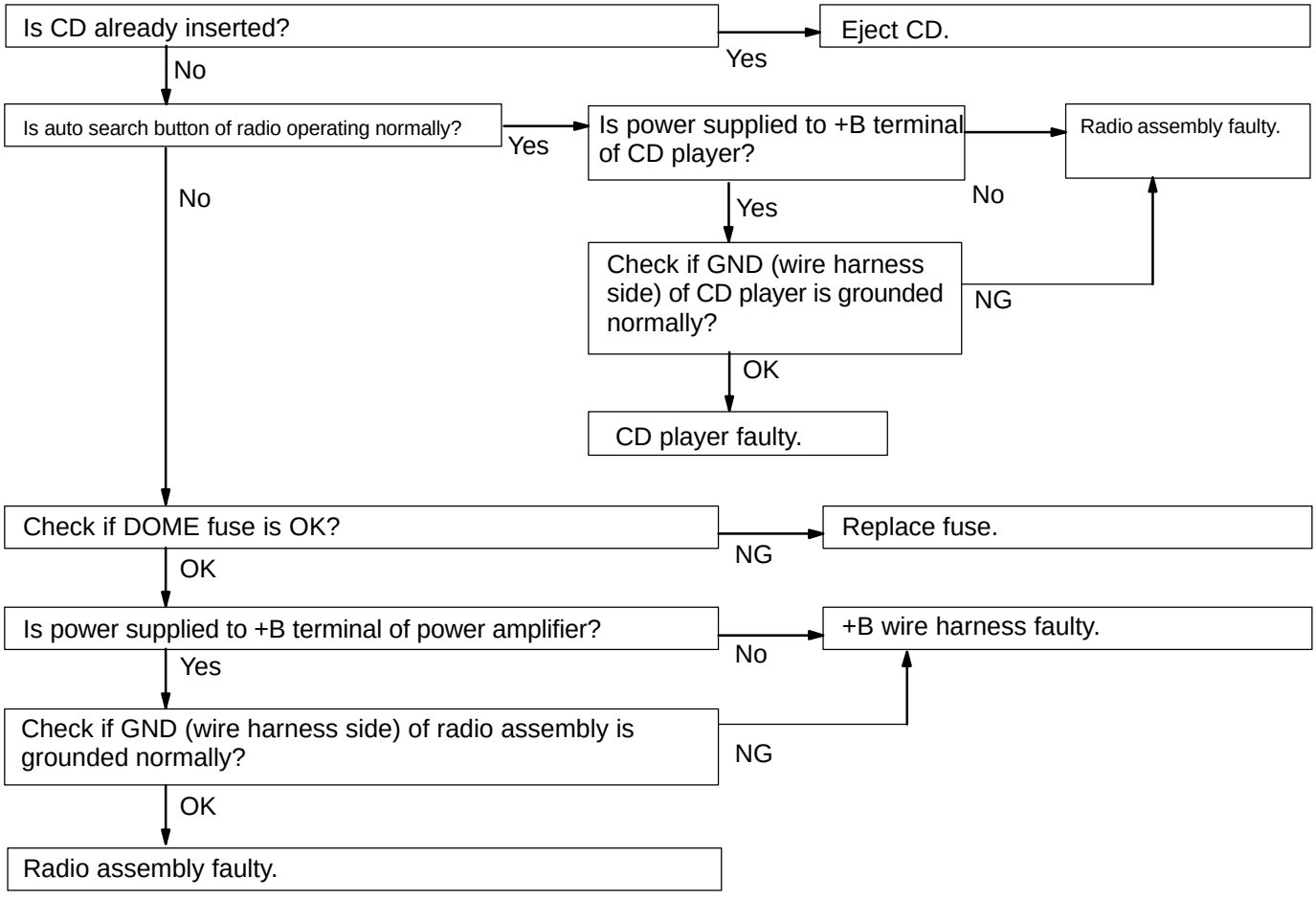

17	CD Player	CD CAN BE INSERTED, BUT NO POWER IS PRODUCED

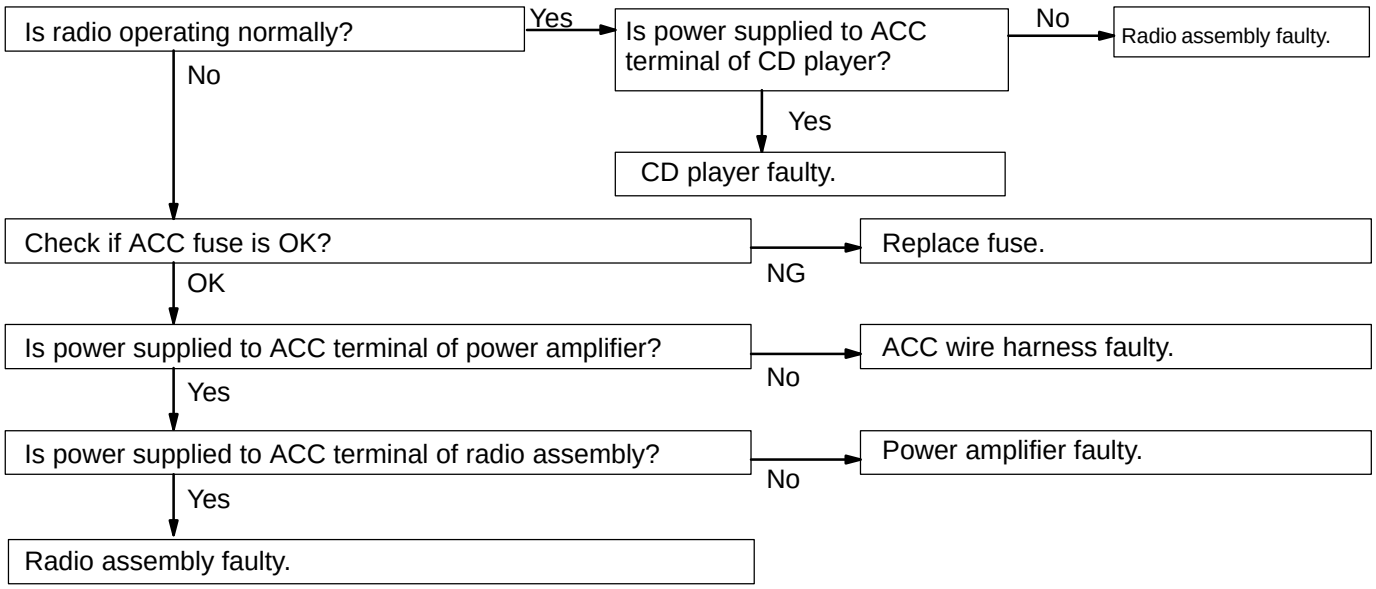

18	CD Player	POWER COMES IN, BUT CD PLAYERDOES NOT OPERAE

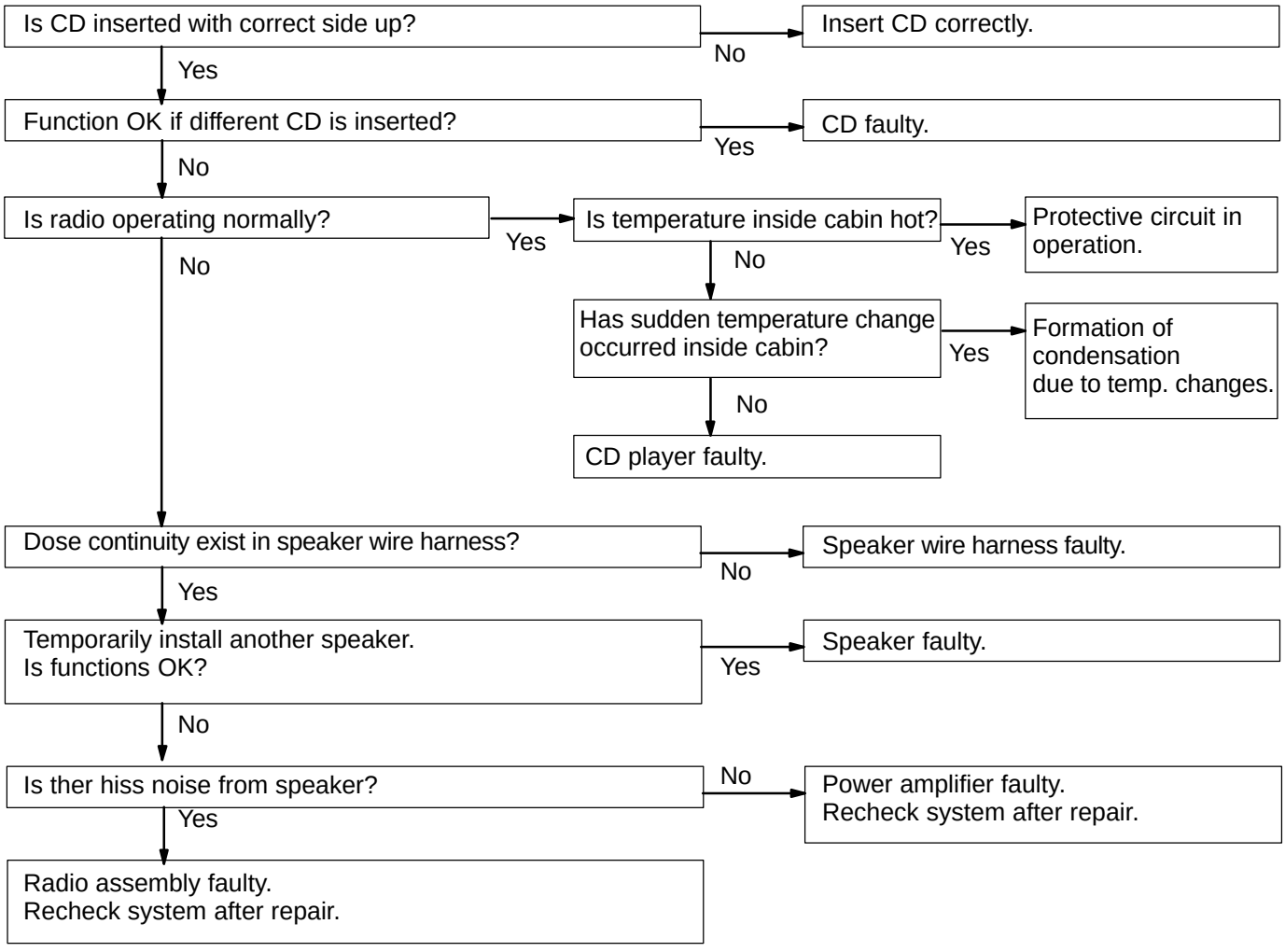

19	CD Player	SOUND JUMPS

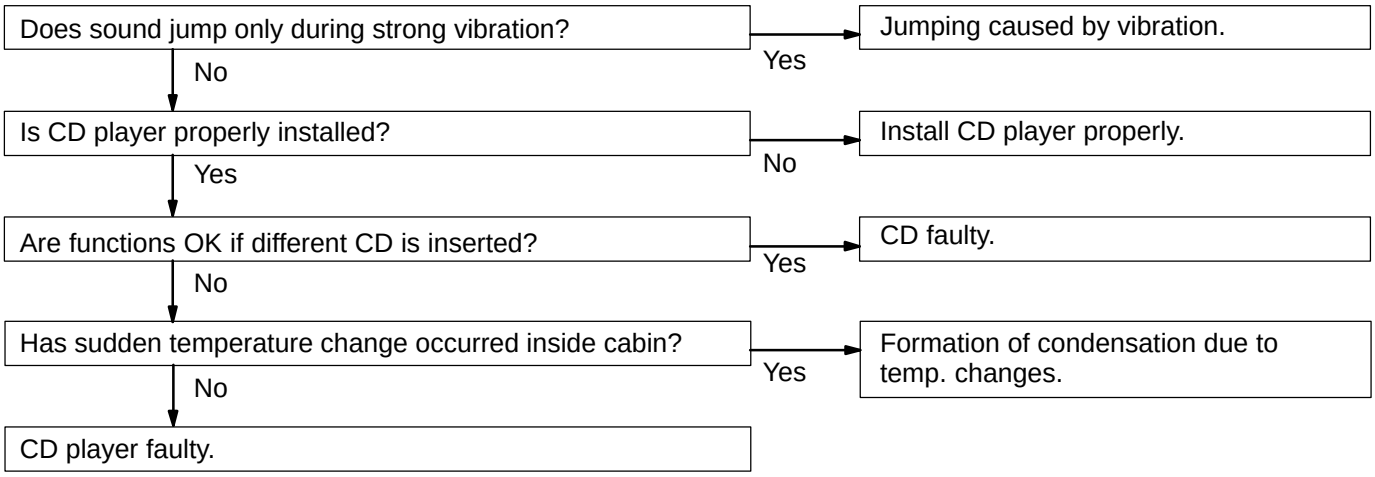

20	CD Player	SOUND QUALITY IS POOR (VOLUME FAINT)

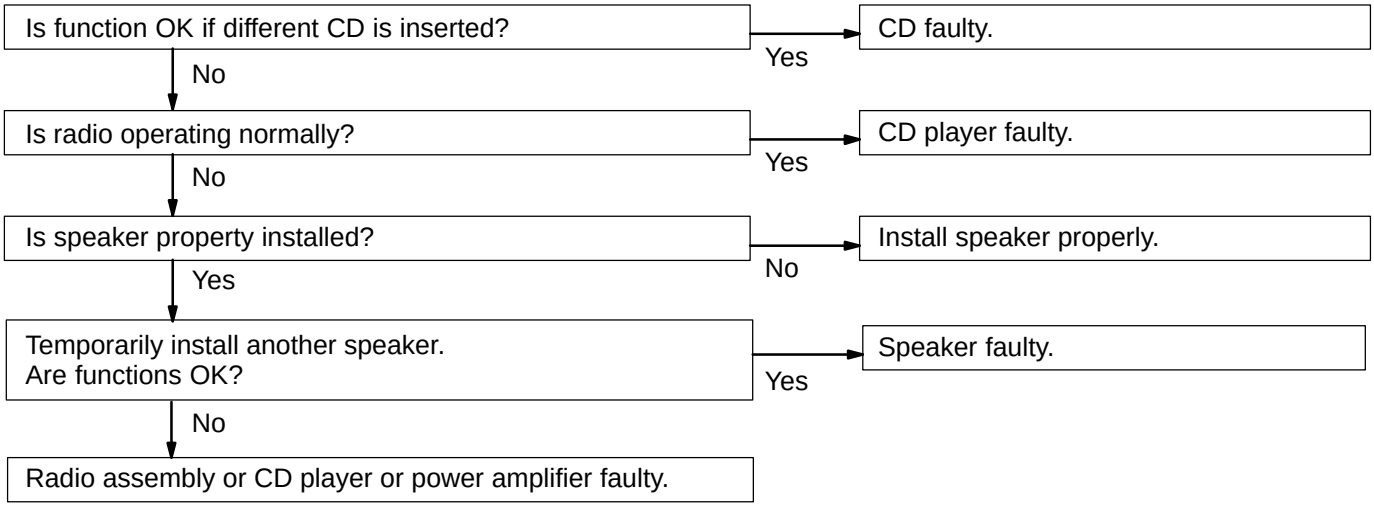

21	CD Player	ANY SPEAKER DOES NOT WORK

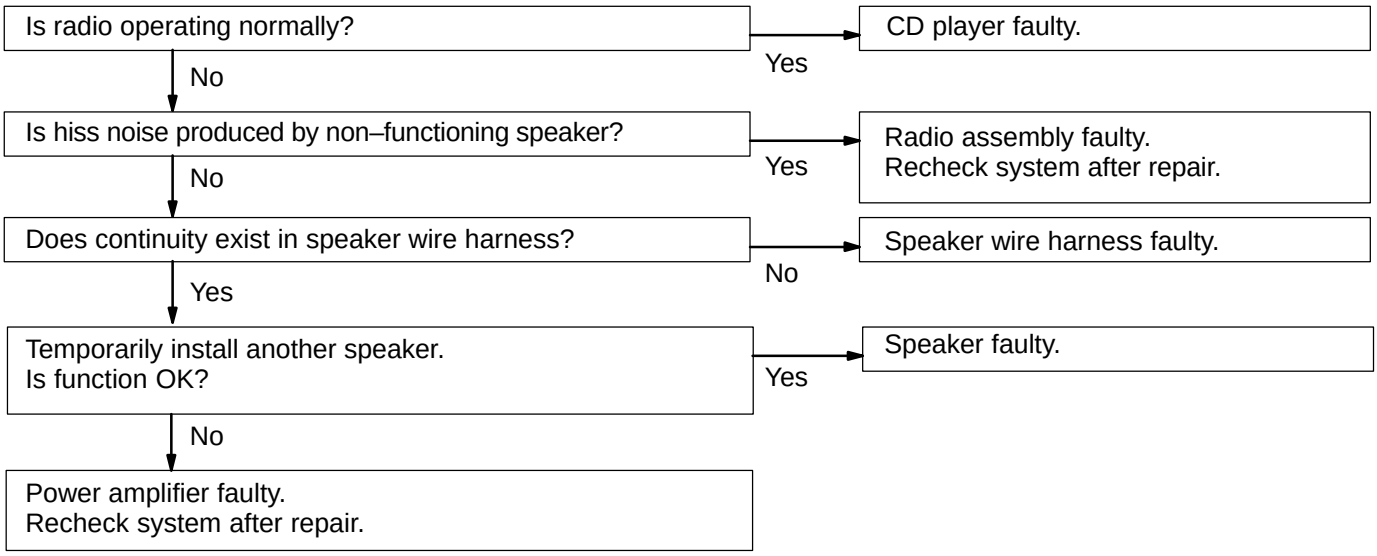

22	CD Player	CD CAN NOT BE EJECTED

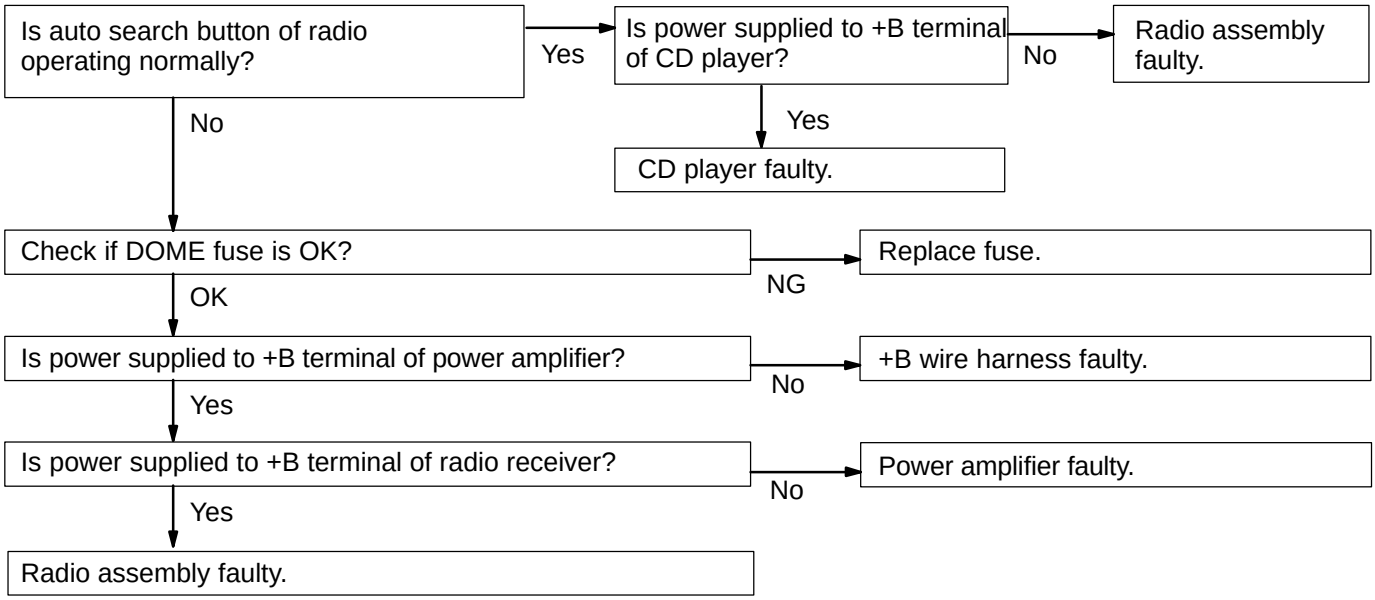

23	Power Amplifier	NO POWER COMES IN

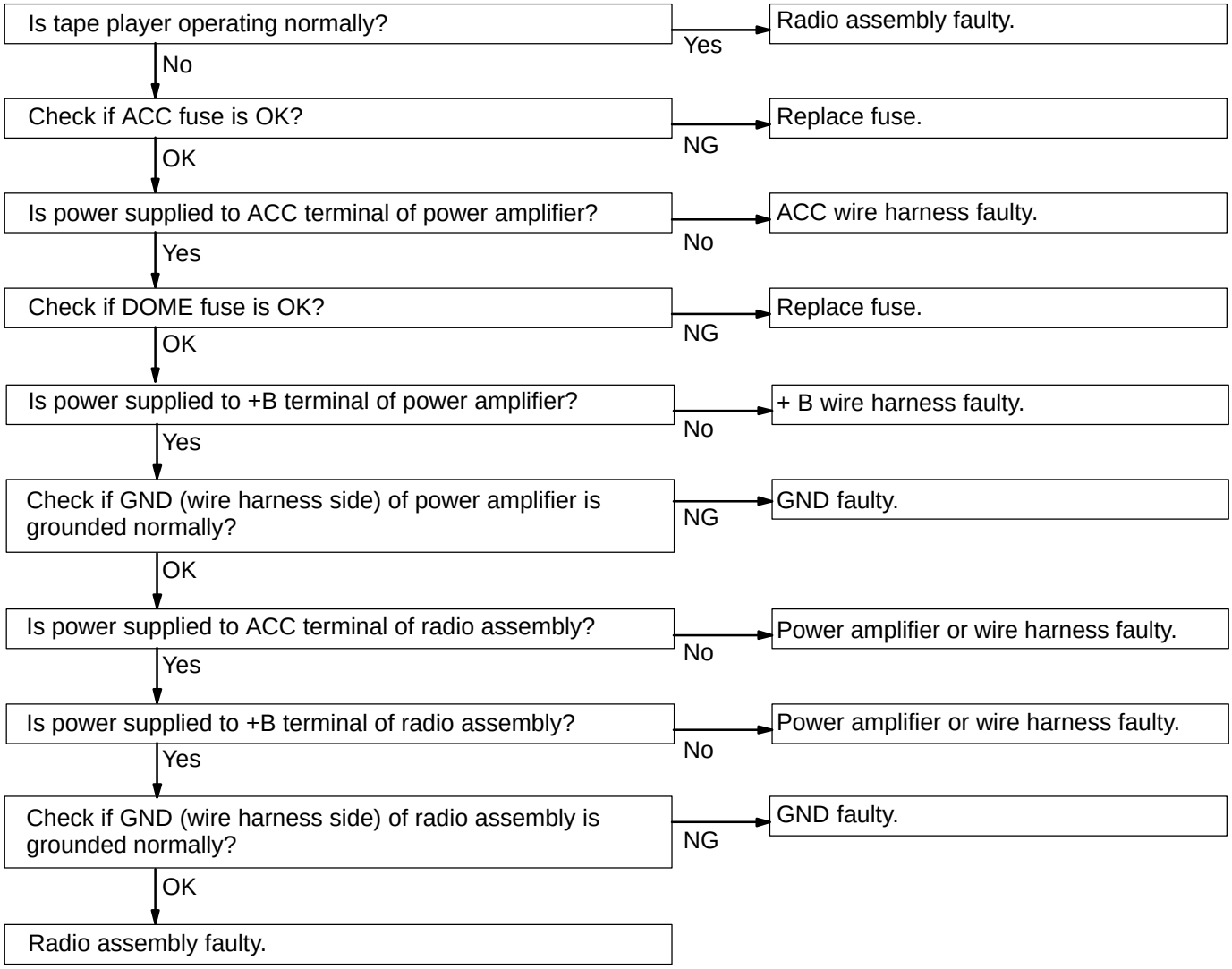

24	Power Amplifier	POWER COMES IN, BUT WOOFER (POWER) AMPLIFIER DOES NOT OPERAE

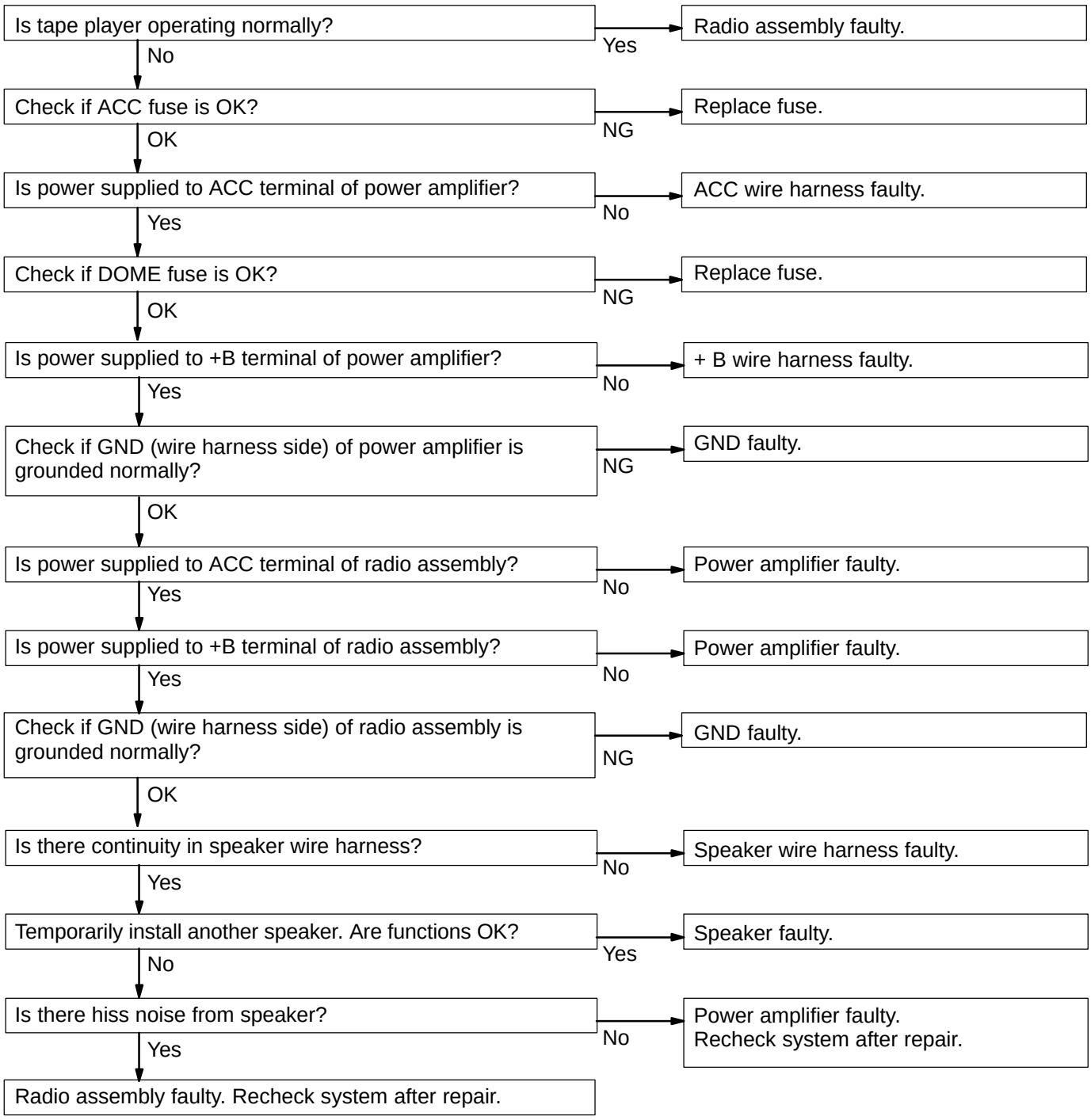

25	Power Amplifier	ANY SPEAKER DOES NOT WORK

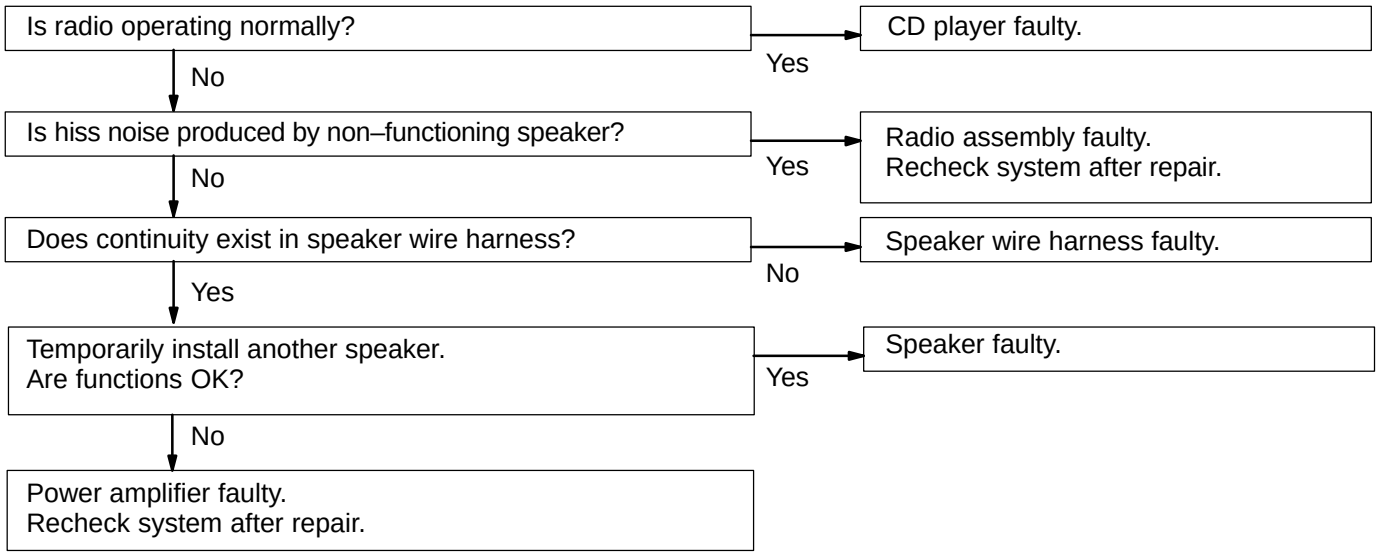

26	Noise	NOISE OCCURS

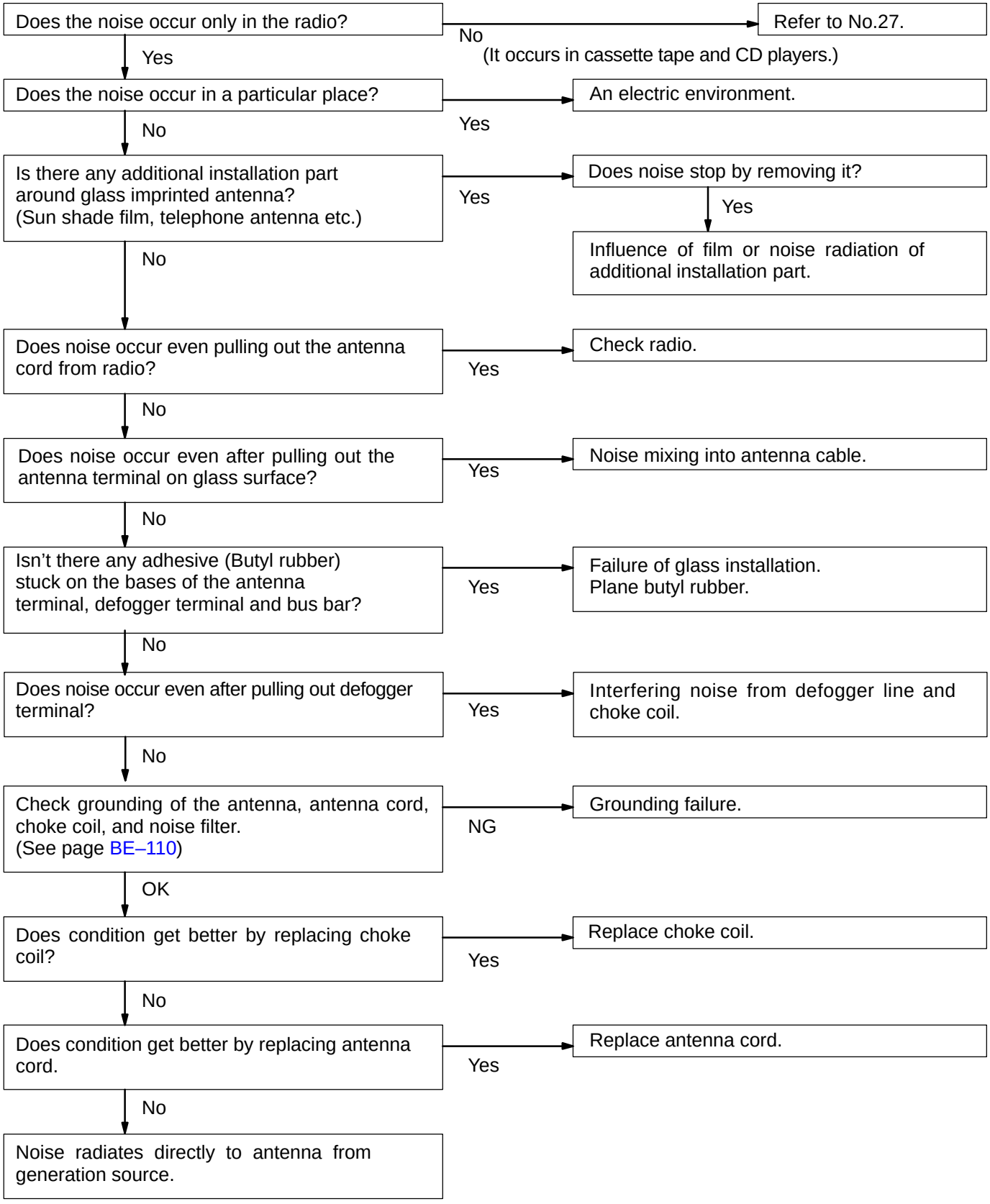

27	Noise	NOISE IS PRODUCED BY VIBRATION OR SHOCK WHILE DRIVING

Is speaker properly installed?
- No → Install speaker properly.
- Yes ↓

With vehicles stationary lightly tap each system. Is noise produced?
- Yes → Each system faulty.
- No ↓

Noise is produced from static electricity accumulating in the vehicle body.

28	Noise	NOISE IS PRODUCED WHEN ENGINE STARTS

Whistling noise which becomes high–pitched when accelerator strongly depressed, disappears shortly after engine stops.
- Yes → Generator noise.
- No ↓

Whining noise occurs when A/C is operating.
- Yes → A/C noise.
- No ↓

Scratching noise occurs during sudden acceleration, driving on rough roads or when ignition switch is turned ON.
- Yes → Fuel gauge noise.
- No ↓

Clicking sound is heard when horn button is pressed, then released. Whirring/grating sound is heard when horn button is pushed continuously.
- Yes → Horn noise.
- No ↓

Murmuring sound stops when engine stops.
- Yes → Ignition noise.
- No ↓

Tick–tack noise occurs in co–ordination with blinking of flasher.
- Yes → Turn signal noise.
- No ↓

Noise occurs during window washer operation.
- Yes → Washer noise.
- No ↓

Scratching noise occurs while engine is running, and continues for a while even after engine stops.
- Yes → Engine coolant temperature gauge noise.
- No ↓

Scraping noise occurs in line with wiper beat.
- Yes → Wiper noise.
- No ↓

Other type of noise

BE0GD–22

LOCATION

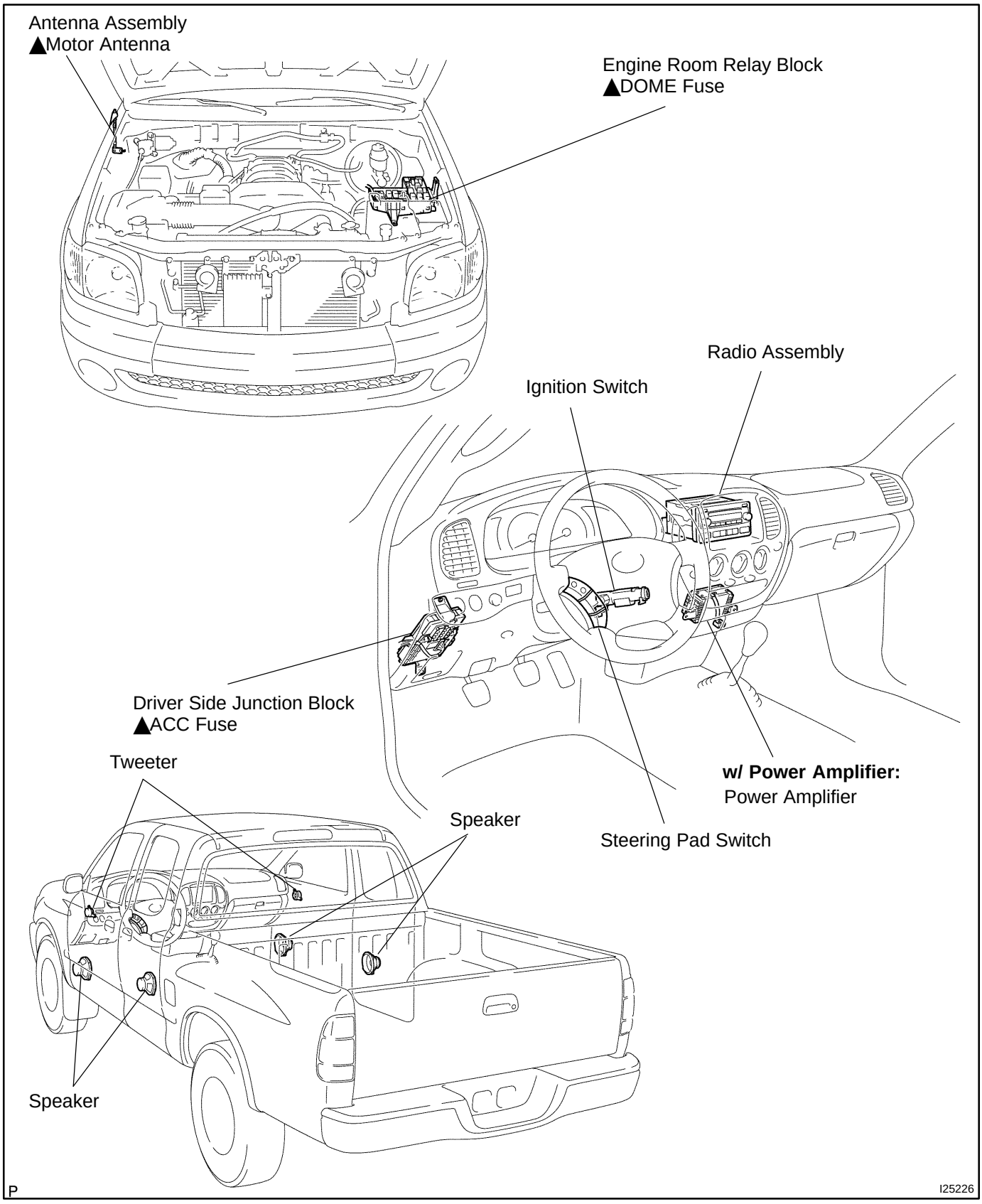

BE17H–02

INSPECTION

1. w/o Power amplifier:

CHECK RADIO RECEIVER ASSEMBLY CIRCUIT

Disconnect the connectors from the radio receiver assembly, and check the connector on the wire harness side.

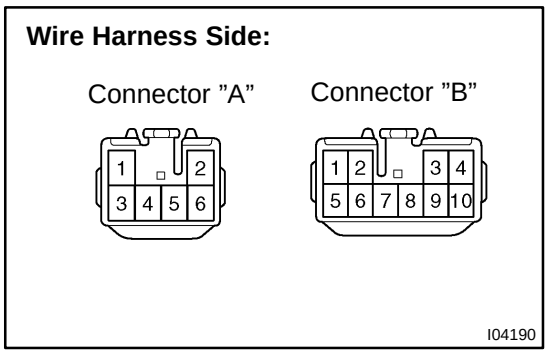

Tester connection	Condition	Specified condition
B3 – Ground	Ignition switch LOCK	No voltage
B3 – Ground	Ignition switch ACC or ON	Battery voltage
B4 – Ground	Constant	Battery voltage
B7 – Ground	Constant	Continuity

If the result is not as specified, inspect the circuits connected to other parts.

2. w/ Power amplifier:

CHECK RADIO RECEIVER ASSEMBLY CIRCUIT

Disconnect the connector from the radio receiver assembly, and check the connector on the wire harness side.

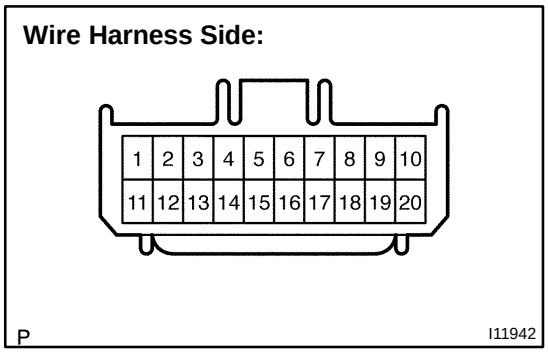

Tester connection	Condition	Specified condition
16 – Ground	Constant	Continuity
1 – Ground	Constant	Battery voltage
11 – Ground	Ignition switch LOCK	No voltage
11 – Ground	Ignition switch ACC or ON	Battery voltage

If the result is not as specified, inspect the circuits connected to other parts.

HINT:

Check the wire harness between the radio receiver assembly and CD auto changer, between the radio receiver assembly and power amplifier.

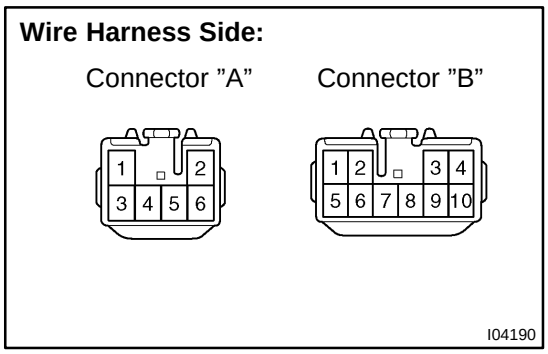

3. CHECK POWER AMPLIFIER CIRCUIT

Disconnect the connectors from the power amplifier and check the connector on the wire harness side.

Tester connection	Condition	Specified condition
B3 – Ground	Ignition switch LOCK	No voltage
B3 – Ground	Ignition switch ACC or ON	Battery voltage
B4 – Ground	Constant	Battery voltage
B7 – Ground	Constant	Continuity

If the result is not as specified, inspect the circuits connected to other parts.

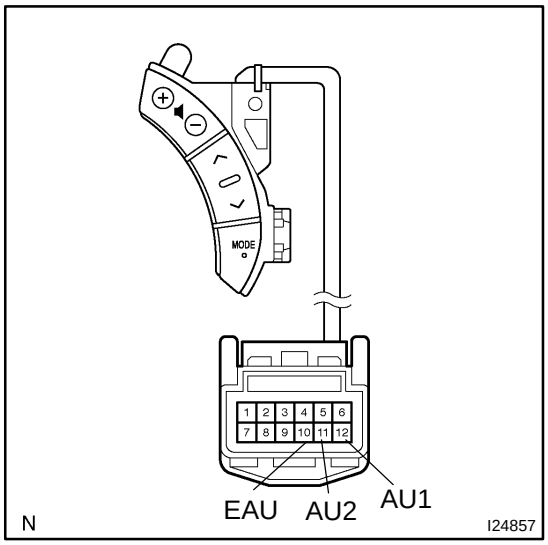

4. INSPECT STEERING PAD SWITCH

Check the resistance of the steering pad switch.

Tester connection	Condition	Resistance
AU1 ↔ EAU	Do not switch position	Approx. 100 KΩ
AU1 ↔ EAU	SEEK + switch: push	0 Ω
AU1 ↔ EAU	SEEK – switch: push	Approx. 0.3 Ω
AU1 ↔ EAU	VOL + switch: push	Approx. 1 KΩ
AU1 ↔ EAU	VOL – switch: push	Approx. 3.2 KΩ
AU2 ↔ EAU	Do not switch position	Approx. 100 KΩ
AU2 ↔ EAU	MODE switch: push	0 Ω

If the resistance is not as specified, replace the switch.

CLOCK

BE03N–10

TROUBLESHOOTING

HINT:

Troubleshoot the clock according to the table below.

Problem	No.
Clock will not operate	1
Clock loses or gains time	2

± 1.5 seconds / day

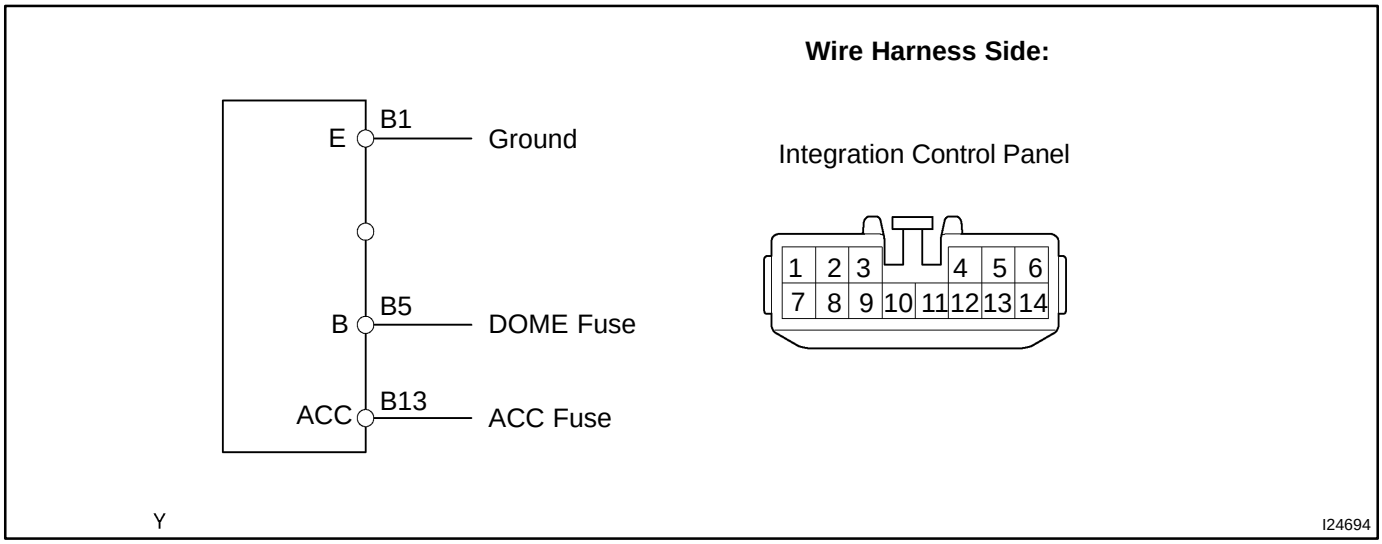

1. PROBLEM NO.1

1	**CLOCK WILL NOT OPERATE**

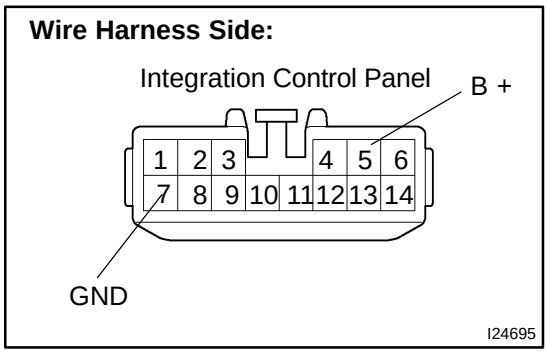

(a) Check that the battery positive voltage is 10 – 16 V.

If voltage is not as specified, replace the battery.

(b) Check that the DOME fuse is not blown.

If the fuse is blown, replace the fuse and check for short.

(c) Troubleshoot the clock as follows.

HINT:

Inspect the connector on the wire harness side.

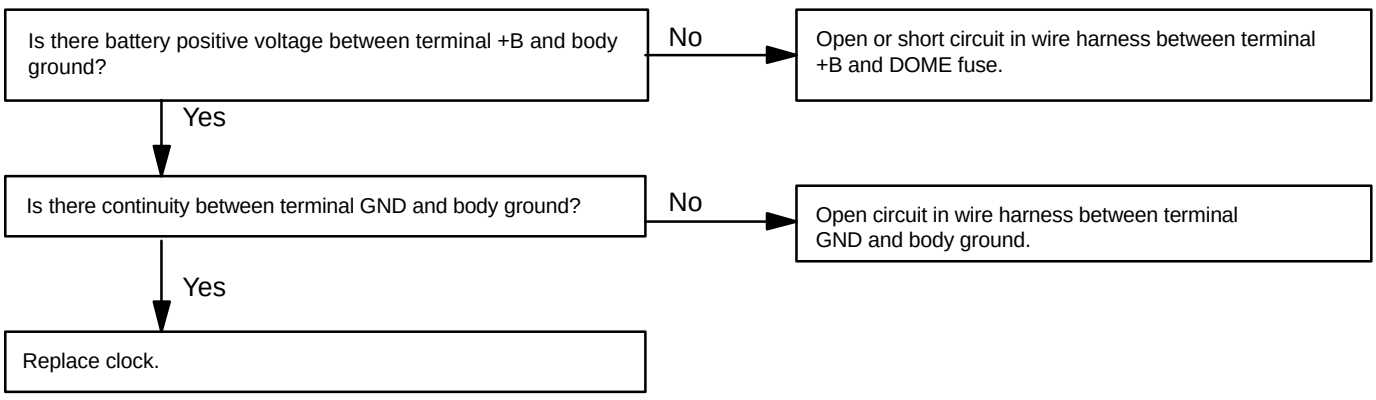

2. PROBLEM NO.2

2	CLOCK LOSES OR GAINS TIME

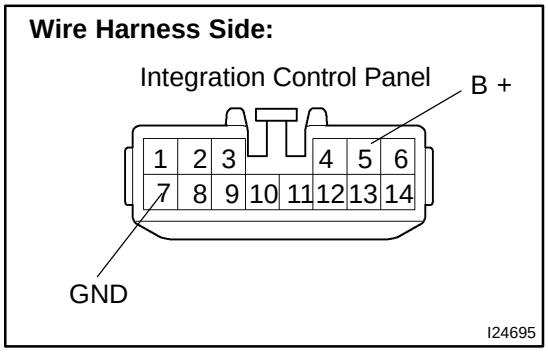

(a) Check that the battery positive voltage is 10 – 16 V.

If voltage is not as specified, replace the battery.

(b) Inspect the error of the clock.

Allowable error (per day): ± 1.5 seconds

If the error exceeds the allowable error, replace the clock.

(c) Check that the clock adjusting button is sticking in position and has failed to return.

If the error exceeds the allowable error, replace the clock.

(d) Troubleshoot the clock as follows.

HINT:

Inspect the connector on the wire harness side.

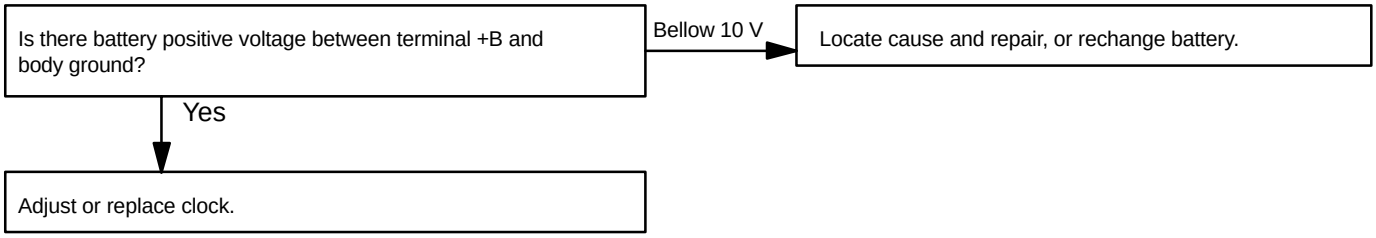

TRAILER TOWING

LOCATION

BE2CW–01

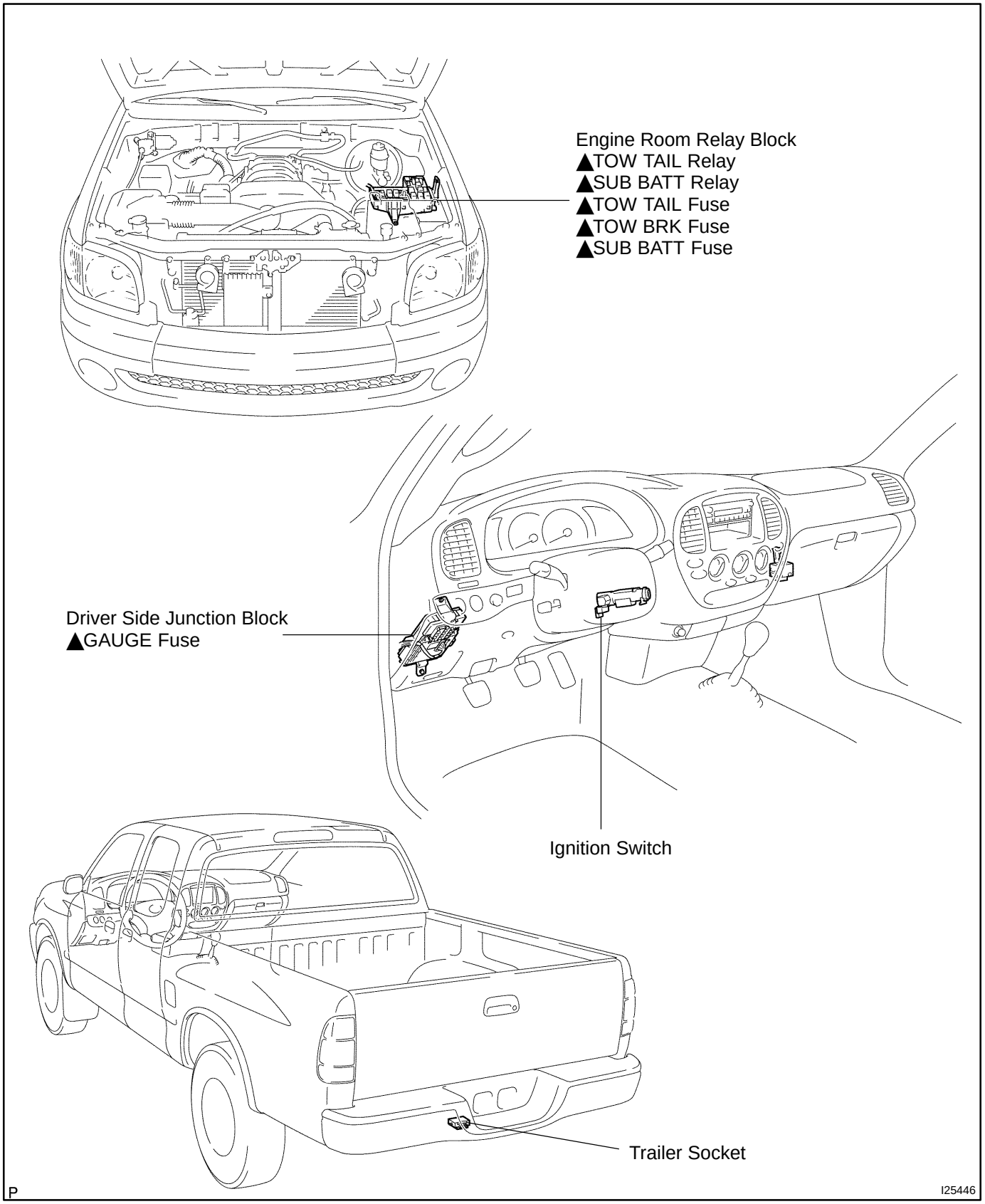

BE2CV–01

INSPECTION

1. INSPECT TOWING CONVERTER CIRCUIT

Remove the towing converter with the connector still connected and inspect the wire harness side connector from the back side, as shown in the table.

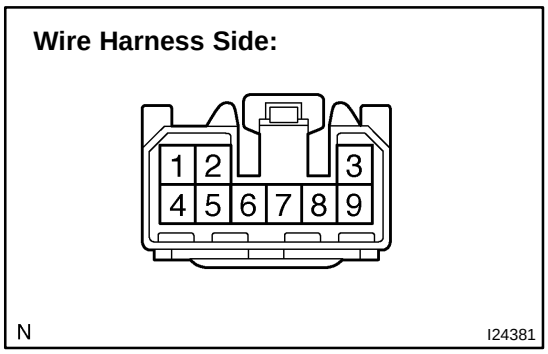

Tester connection	Condition	Specified condition
1 – 6	Constant	10 – 14 V
2 – 6	Turn signal switch RIGHT or hazard warning switch ON	10 – 14 V ↔ 0 V
	Turn signal switch RIGHT and stop light switch ON (Brake pedal depressed)	10 – 14 V ↔ 0 V
	Turn signal switch OFF, and hazard warning switch OFF and stop light switch OFF (Brake pedal released)	0 V
	Stop light switch ON (Brake pedal depressed)	10 – 14 V ↔ 0 V
3 – 6	Turn signal switch RIGHT or hazard warning switch ON	10 – 14 V ↔ 0 V
	Turn signal switch OFF or LEFT and hazard warning switch OFF	0 V
4 – 6	Turn signal switch LEFT or hazard warning switch ON	10 – 14 V ↔ 0 V
	Turn signal switch LEFT and stop light switch ON (Brake pedal depressed)	10 – 14 V ↔ 0 V
	Turn signal switch OFF, hazard warning switch OFF and stop light switch OFF (Brake pedal released)	0 V
	Stop light switch ON (Brake pedal depressed)	10 – 14 V
6 – 8	Stop light switch ON (Brake pedal depressed)	10 – 14 V
	Stop light switch OFF (Brake pedal released)	0 V
6 – 9	Turn signal switch LEFT or hazard warning switch ON	10 – 14 V ↔ 0 V
	Turn signal switch OFF or RIGHT and hazard warning switch OFF	0 V
6 – Body ground	Constant	Continuity

If the result is not as specified, inspect the circuit connected to other parts.

2. INSPECT TOWING TAIL RELAY (Marking: TOW TAIL) CONTINUITY

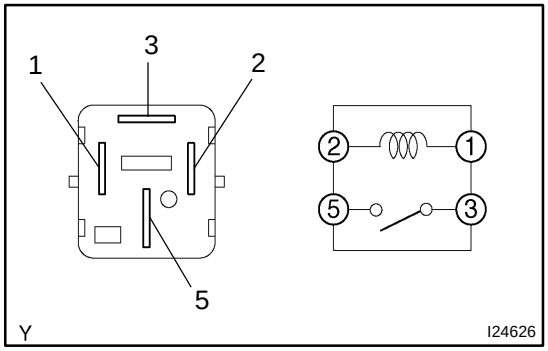

Condition	Tester connection	Specified condition
Constant	1 – 2	Continuity
Apply B+ between terminals 1 and 2	3 – 5	Continuity

If the continuity is not as specified, replace the relay.

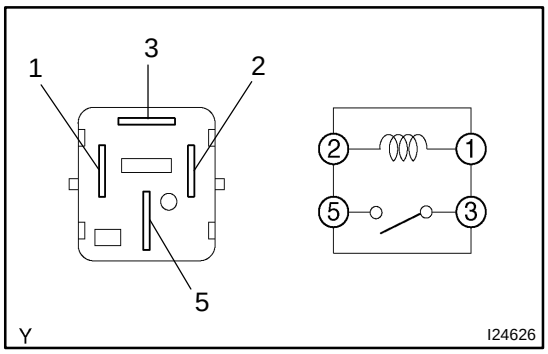

3. INSPECT SUB BATTERY RELAY (Marking: SUB BATT) CONTINUITY

Condition	Tester connection	Specified condition
Constant	1 – 2	Continuity
Apply B+ between terminals 1 and 2	3 – 5	Continuity

If the continuity is not as specified, replace the relay.

BRAKE SYSTEM

BR0A9–03

PRECAUTION

- **Care must be taken to replace each part properly as it could affect the performance of the brake system and result in a driving hazard. Replace the parts with parts having the same part number or equivalent.**
- **It is very important to keep parts and the area clean when repairing the brake system.**
- **If the vehicle is equipped with a mobile communication system, refer to the precautions in the IN section.**

TROUBLESHOOTING

BR08P–05

PROBLEM SYMPTOMS TABLE

Use the table below to help you find the cause of the problem. The numbers indicate the priority of the likely cause of the problem. Check each part in order. If necessary, replace these parts.

Symptom	Suspect Area	See page
Low pedal or spongy pedal	4. Fluid leaks for brake system	DI–487
	5. Air in brake system	DI–487
	6. Piston seals (Worn or damaged)	BR–26
	7. Rear brake shoe clearance (Out of adjustment)	BR–37
	8. Master cylinder (Faulty)	BR–14
	9. Booster push rod (Out of adjustment)	BR–23
Brake drag	1. Brake pedal freeplay (Minimum)	BR–6
	2. Parking brake lever travel (Out of adjustment)	BR–13
	3. Parking brake pedal travel (Out of adjustment)	BR–9
	4. Parking brake wire (Sticking)	
	5. Rear brake shoe clearance (Out of adjustment)	BR–37
	6. Pad or lining (Cracked or distorted)	BR–24 BR–32
	7. Piston (Stuck)	BR–26
	8. Piston (Frozen)	BR–26
	9. Anchor or return spring (Faulty)	BR–32
	10. Booster push rod (Out of adjustment)	BR–23
	11. Vacuum leaks for booster system	BR–20
	12. Master cylinder (Faulty)	BR–14
Brake pull	1. Piston (Stuck)	BR–26
	2. Pad or lining (Oily)	BR–24 BR–32
	3. Piston (Frozen)	BR–26
	4. Disc (Scored)	BR–26
	5. Pad or lining (Cracked or distorted)	BR–24 BR–32

Hard pedal but brake inefficient	1. Fluid leaks for brake system	DI–487
	2. Air in brake system	DI–487
	3. Pad or lining (Worn)	BR–24 BR–32
	4. Pad or lining (Cracked or distorted)	BR–24 BR–32
	5. Rear brake shoe clearance (Out of adjustment)	BR–37
	6. Pad or lining (Oily)	BR–24 BR–32
	7. Pad or lining (Glazed)	BR–24 BR–32
	8. Disc (Scored)	BR–26
	9. Booster push rod (Out of adjustment)	BR–23
	10. Vacuum leaks for booster system	BR–20
Noise from brakes	1. Pad or lining (Cracked or distorted)	BR–24 BR–32
	2. Installation bolt (Loose)	BR–26
	3. Disc (Scored)	BR–26
	4. Pad or lining (Dirty)	BR–24 BR–32
	5. Pad or lining (Glazed)	BR–24 BR–32
	6. Anchor or return spring (Faulty)	BR–32
	7. Anti–squeal shim (Damaged)	BR–24
	8. Shoe hold–down spring (Damaged)	BR–32

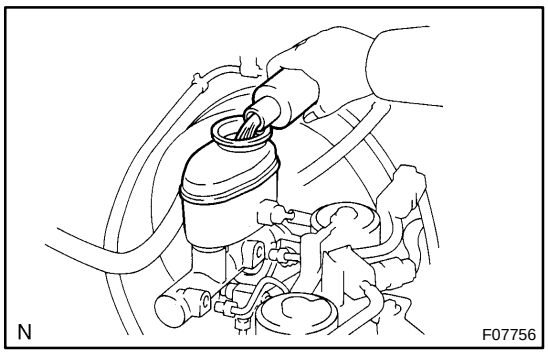

BRAKE FLUID

BR08Q–02

BLEEDING

HINT:

If any work is done on the brake system or if air is suspected in the brake lines, bleed the air from the system.

NOTICE:

Do not let brake fluid remain on a painted surface. Wash it off immediately.

1. FILL BRAKE RESERVOIR WITH BRAKE FLUID

Check the fluid level in the reservoir after bleeding each wheel. Add fluid, if necessary.

Fluid: SAE J1703 or FMVSS No. 116 DOT3

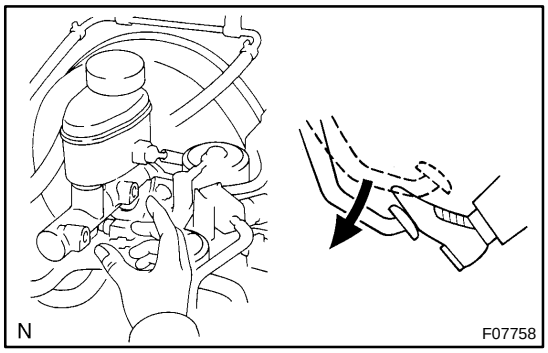

2. BLEED MASTER CYLINDER

HINT:

If the master cylinder was disassembled or if the reservoir becomes empty, bleed the air from the master cylinder.

(a) Disconnect the brake lines from the master cylinder.
SST 09023–00100

(b) Slowly depress the brake pedal and hold it.

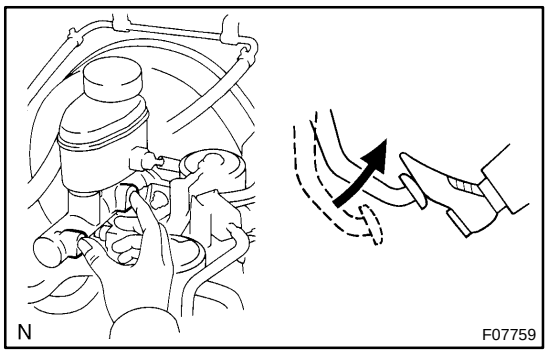

(c) Block off the outlet plug with your finger, and release the brake pedal.

(d) Repeat (b) and (c) 3 or 4 times.

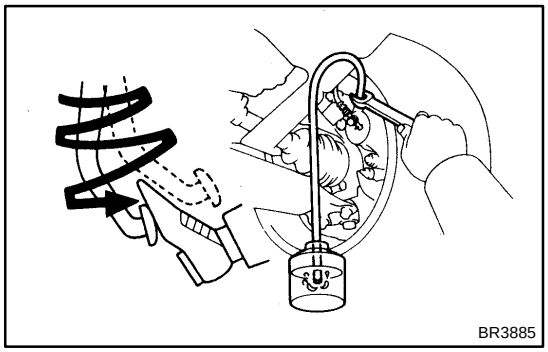

3. BLEED BRAKE LINE

(a) Connect the vinyl tube to the caliper.

(b) Depress the brake pedal several times, then loosen the bleeder plug with the pedal held down.
SST 09751–36011

(c) At the point when fluid stops coming out, tighten the bleeder plug, then release the brake pedal.

(d) Repeat (b) and (c) until all the air in the fluid has been bled out.

Torque: (Bleeder plug) 11 N·m (110 kgf·cm, 8 ft·lbf)

(e) Repeat the procedure on the previous page to bleed the air out of brake line for each wheel.

4. CHECK FLUID LEVEL IN RESERVOIR

Check the fluid level and add fluid if necessary.

Fluid: SAE J1703 or FMVSS No. 116 DOT3

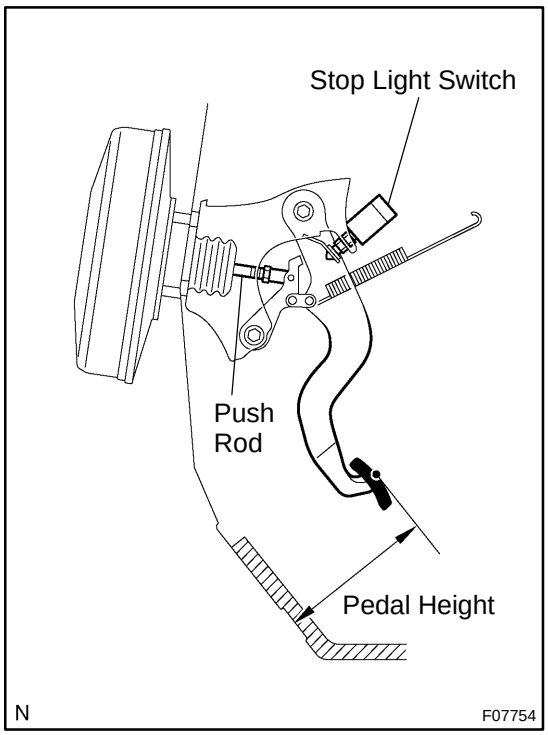

BRAKE PEDAL

BR107–01

ON–VEHICLE INSPECTION

1. CHECK PEDAL HEIGHT

Pedal height from dash panel:
164 – 174 mm (6.46 – 6.85 in.)

2. IF NECESSARY, ADJUST PEDAL HEIGHT

(a) Remove the scuff plate LH, cowl side trim LH, lower finish panel and No. 2 heater to register duct (See page BO–72).

(b) Disconnect the connector from the stop light switch.

(c) Loosen the stop light switch lock nut and remove the stop light switch.

(d) Loosen the push rod lock nut.

(e) Adjust the pedal height by turning the pedal push rod.

(f) Tighten the push rod lock nut.

Torque: 25 N·m (260 kgf·cm, 19 ft·lbf)

(g) Install the stop light switch and turn it until it lightly contacts the pedal stopper.

(h) Connect the connector to the stop light switch.

(i) Push in the brake pedal 5 – 15 mm (0.20 – 0.59 in), turn the stop light switch to lock the nut in the position where the stop light goes off.

(j) After installation, push in the brake pedal 5 – 15 mm (0.20 – 0.59 in.), check that stop light lights up.

(k) After adjusting the pedal height, check the pedal free play.

(l) Install the No. 2 heater to register duct, lower finish panel, cowl side trim LH and scuff plate LH.

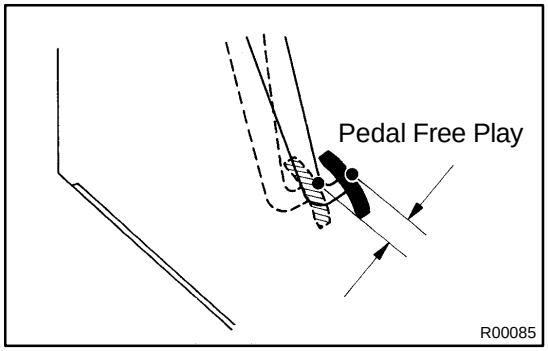

3. CHECK PEDAL FREE PLAY

(a) Stop the engine and depress the brake pedal several times until there is no more vacuum left in the booster.

(b) Push in the pedal by hand until the second point of resistance begins to be felt, then measure the distance as shown in the illustration.

Pedal free play: 1 – 6 mm (0.04 – 0.24 in.)

If incorrect , check the stop light switch clearance. If the clearance is OK, then troubleshoot the brake system.

Stop light switch clearance:
0.5 – 2.4 mm (0.020 – 0.094 in.)

HINT:

The free play to the first point of resistance is due to the play between the clevis and pin. It is 1 – 3 mm (0.04 – 0.12 in.) at the pedal.

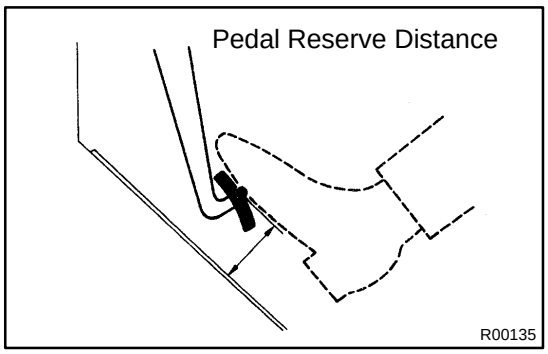

4. CHECK PEDAL RESERVE DISTANCE

Release the parking brake.

With the engine running, depress the pedal and measure the pedal reserve distance, as shown.

Pedal reserve distance from asphalt sheet at 490 N (50 kgf, 110.2 lbf): More than 95 mm (3.74 in.)

If the reserve distance is incorrect, troubleshoot the brake system.

BR108–01

COMPONENTS

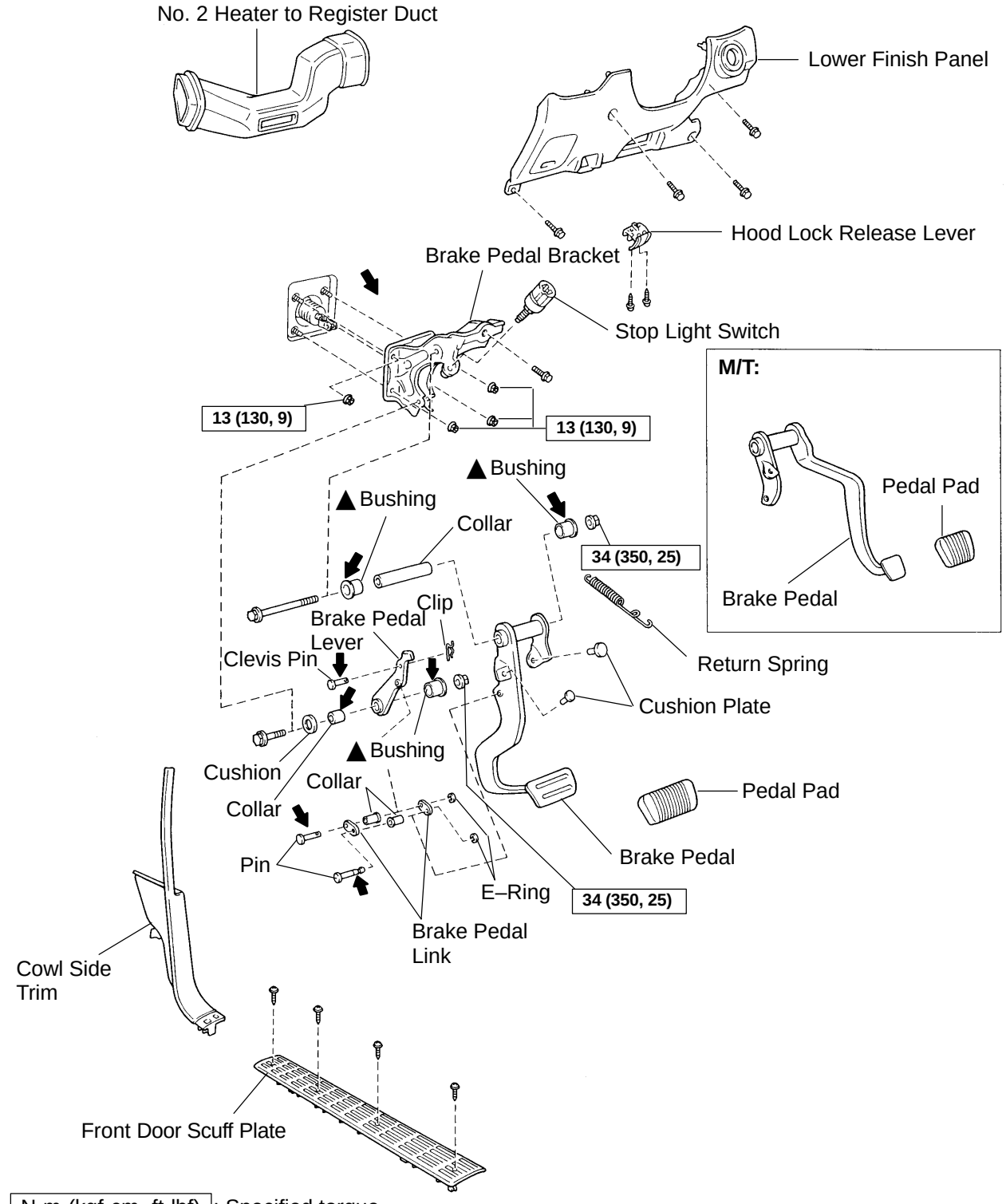

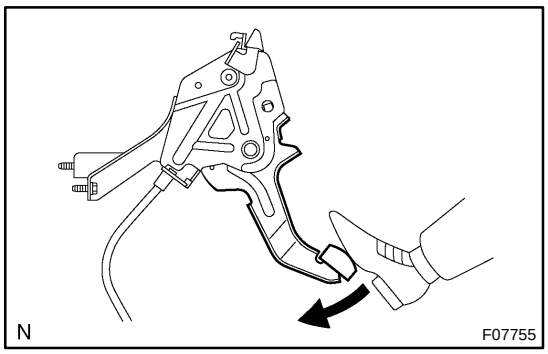

PARKING BRAKE PEDAL

BR109–01

ON–VEHICLE INSPECTION

1. CHECK PARKING BRAKE PEDAL TRAVEL

Depress the parking brake pedal all the way and count the number of clicks.

Parking brake pedal travel at 294 N (30 kgf, 66 lbf): 6 – 9 clicks

If incorrect, adjust the parking brake.

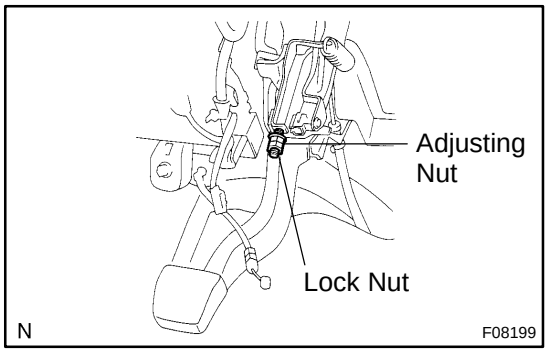

2. IF NECESSARY, ADJUST PARKING BRAKE PEDAL TRAVEL

HINT:

Before adjusting the parking brake, make sure that the rear brake shoe clearance has been adjusted. For shoe clearance adjustment, see step 3 on page BR–37.

(a) Remove the scuff plate LH.
(b) Remove the cowl side trim LH.
(c) Remove the lower finish panel.
(d) Remove the No. 2 heater to register duct.
(e) Loosen the lock nut and turn the adjusting nut until the pedal travel is correct.
(f) Tighten the lock nut.
Torque: 5.4 N·m (55 kgf·cm, 48 in.·lbf)
(g) Install the removed parts.

BR10A–01

COMPONENTS

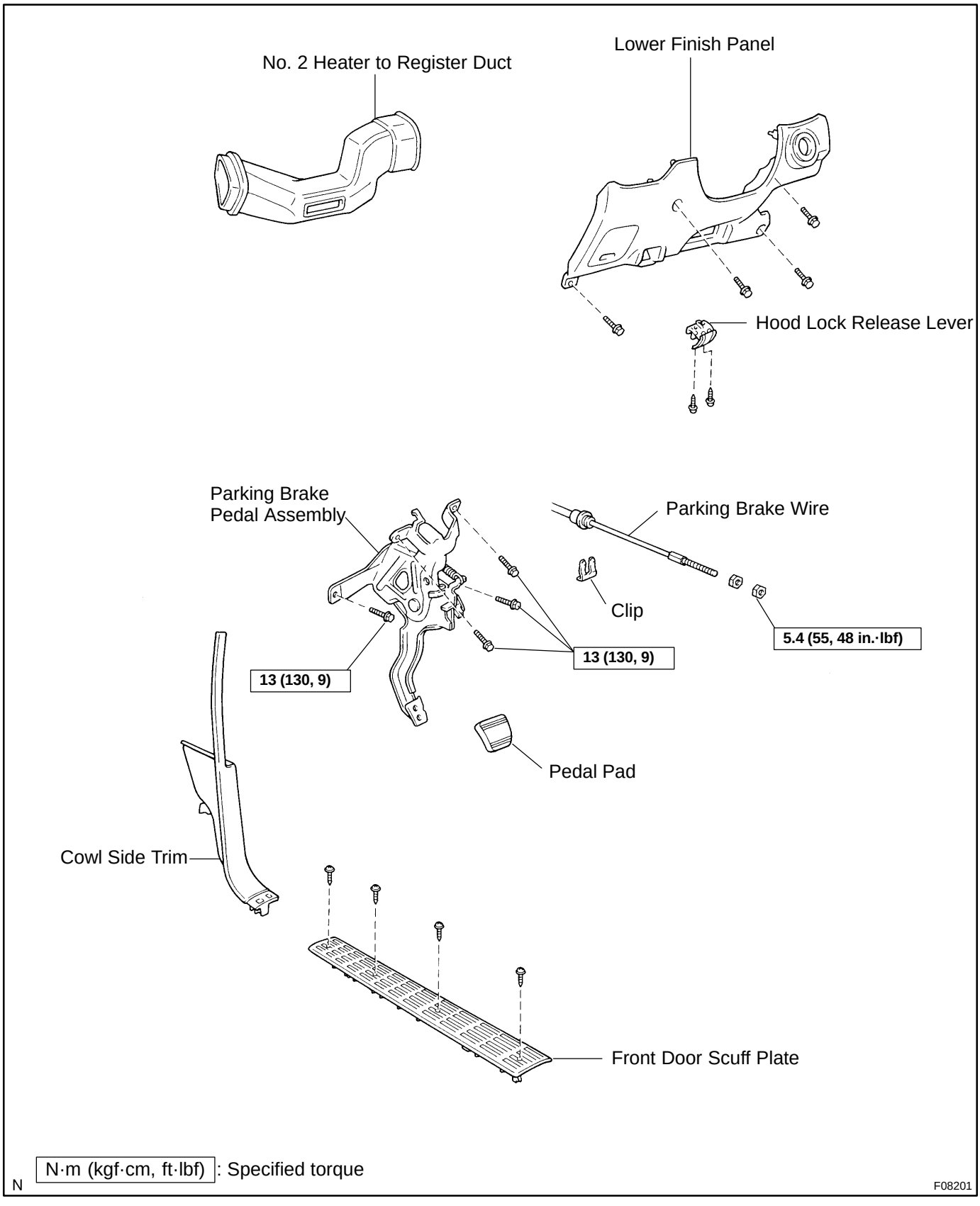

BR10B–01

REMOVAL

1. REMOVE SCUFF PLATE LH, COWL SIDE TRIM LH, LOWER FINISH PANEL AND NO. 2 HEATER TO REGISTER DUCT

2. REMOVE PARKING BRAKE PEDAL ASSEMBLY

(a) Disconnect the parking brake switch connector.

(b) Remove the lock nut and adjusting nut from the parking brake wire.

(c) Remove the clip and parking brake wire.

(d) Remove the 4 bolts and parking brake pedal assembly.
Torque: 13 N·m (130 kgf·cm, 9 ft·lbf)

BR10C–01

INSTALLATION

Installation is in the reverse order of removal (See page BR–11).

HINT:

After the installation, check and adjust parking brake pedal travel (See page BR–9).

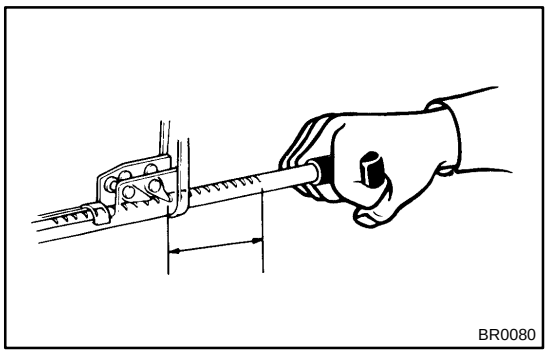

PARKING BRAKE LEVER

BR10D–01

ON–VEHICLE INSPECTION

1. CHECK PARKING BRAKE LEVER TRAVEL

Pull the parking brake lever all the way up, and count the number of clicks.

Parking brake lever travel at 196 N (20 kgf, 44 lbf):
6 – 14 clicks

If incorrect, adjust the parking brake.

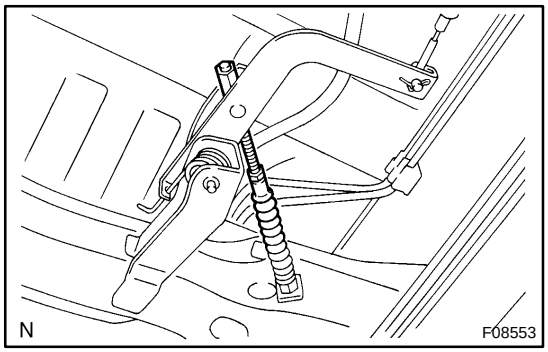

2. IF NECESSARY, ADJUST PARKING BRAKE

HINT:

Before adjusting the parking brake, make sure that the rear brake shoe clearance has been adjusted. For shoe clearance adjustment, see step 3 on page BR–37.

(a) Tighten one of the adjusting nuts of the intermediate lever while loosening the other one until the travel is correct. Tighten the 2 adjusting nuts.

(b) After adjusting the parking brake, confirm that the bell-crank stopper screw comes into contact with the backing plate (See page BR–37).

For shoe clearance adjustment, see step 3 on page

BRAKE MASTER CYLINDER

COMPONENTS

BR10E–01

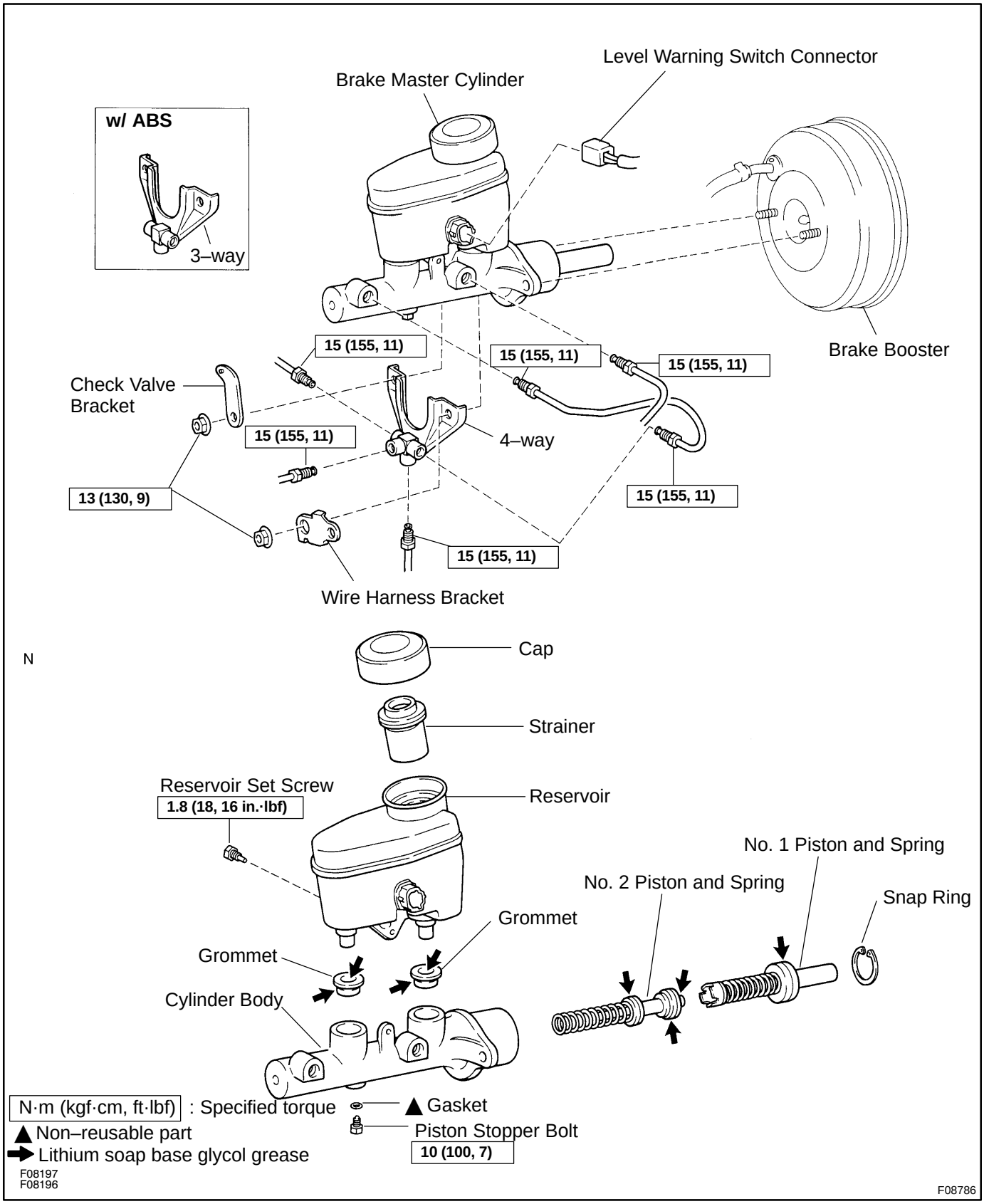

BR08U–02

REMOVAL

1. DISCONNECT LEVEL WARNING SWITCH CONNECTOR

2. TAKE OUT FLUID WITH SYRINGE

NOTICE:

Do not let brake fluid remain on a painted surface. Wash it off immediately.

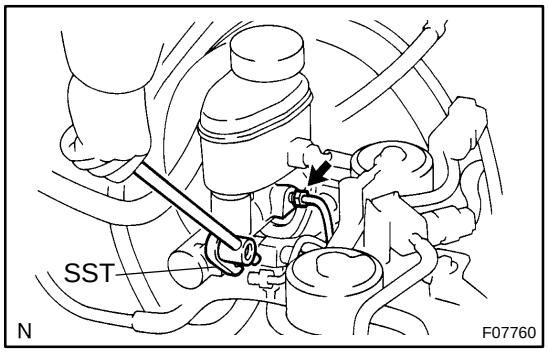

3. DISCONNECT BRAKE LINES

Using SST, disconnect the 5 or 6 brake lines from the master cylinder and 3–way or 4–way.

SST 09023–00100

Torque: 15 N·m (155 kgf·cm, 11 ft·lbf)

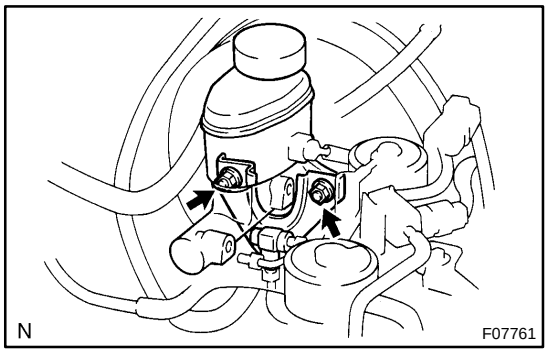

4. REMOVE MASTER CYLINDER

(a) w/ ABS:

Remove the 2 nuts, wire harness bracket 3–way and check valve bracket.

Torque: 13 N·m (130 kgf·cm, 9 ft·lbf)

(b) w/o ABS:

Remove the 2 nuts, wire harness bracket 4–way and check valve bracket.

Torque: 13 N·m (130 kgf·cm, 9 ft·lbf)

(c) Pull out the master cylinder from brake booster.

BR10F–01

DISASSEMBLY

1. REMOVE RESERVOIR

(a) Remove the set screw and pull out the reservoir.
Torque: 1.8 N·m (18 kgf·cm, 16 in.·lbf)

(b) Remove the cap and strainer from the reservoir.

2. REMOVE 2 GROMMETS

3. PLACE CYLINDER IN VISE

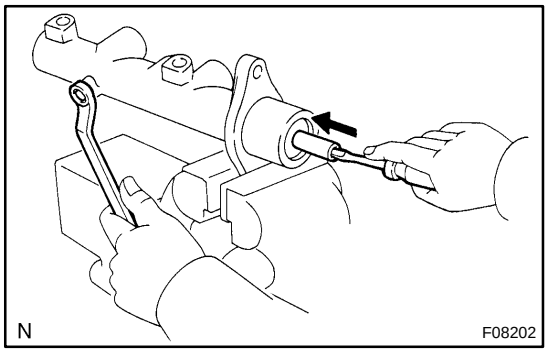

4. REMOVE PISTON STOPPER BOLT

Using a screwdriver, push the pistons in all the way and remove the piston stopper bolt and gasket.

HINT:

Tape the screwdriver tip before use.

Torque: 10 N·m (100 kgf·cm, 7 ft·lbf)

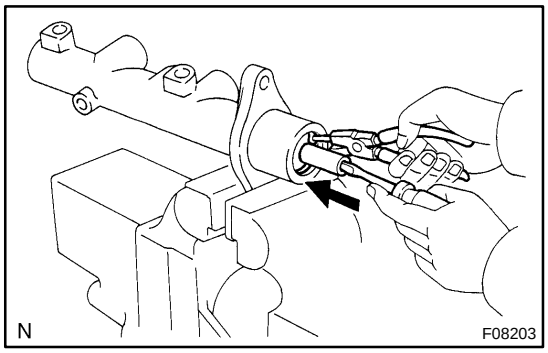

5. REMOVE 2 PISTONS AND SPRINGS

(a) Push in the piston with a screwdriver and remove the snap ring with snap ring pliers.

HINT:

Tape the screwdriver tip before use.

(b) Remove the No. 1 piston and spring by hand, pulling straight out, not at an angle.

NOTICE:

- **If pulled out and installed at an angle, there is a possibility that the cylinder bore could be damaged.**
- **At the time of reassembly, be careful not to damage the rubber lips on the pistons.**

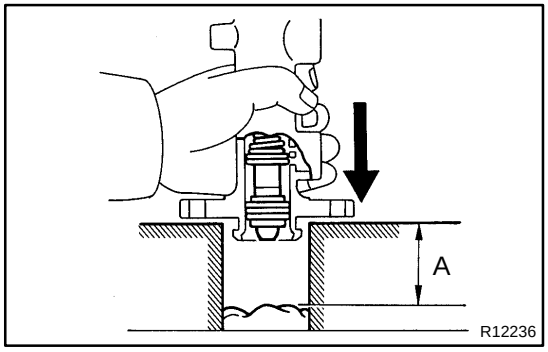

(c) Place a rag and 2 wooden blocks on the work table, and lightly tap the cylinder flange against the block edges until the No. 2 piston and spring drop out of the cylinder.

HINT:

Make sure the distance (A) from the rag to the top of the blocks is at least 100 mm (3.94 in.).

BR08W–02

INSPECTION

HINT:

Clean the disassembled parts with compressed air.

1. INSPECT CYLINDER BORE FOR RUST OR SCORING

If necessary, clean or replace the cylinder.

2. INSPECT CYLINDER FOR WEAR OR DAMAGE

If necessary, clean or replace the cylinder.

BR08X–02

REASSEMBLY

Reassembly is in the reverse order of disassembly (See page BR–16).

NOTICE:

Apply lithium soap base glycol grease to the rubber parts indicated by the arrows (See page BR–14).

BR08Y–02

INSTALLATION

Installation is in the reverse order of removal (See page BR–15).

HINT:

- ▲ Before installation, adjust length of brake booster push rod (See page BR–23).
- ▲ After installation, fill brake reservoir with brake fluid and bleed brake system (See page BR–4).
- ▲ Check for leaks, check and adjust brake pedal (See page BR–6).

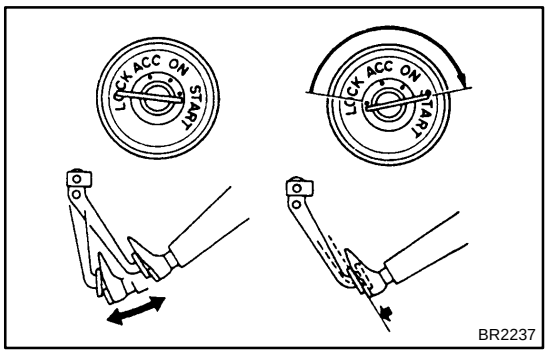

BRAKE BOOSTER ASSEMBLY

BR0AK–04

ON–VEHICLE INSPECTION

1. OPERATING CHECK

(a) Depress the brake pedal several times with the engine off and check that there is no change in the pedal reserve distance.

(b) Depress the brake pedal and start the engine. If the pedal goes down slightly, operation is normal.

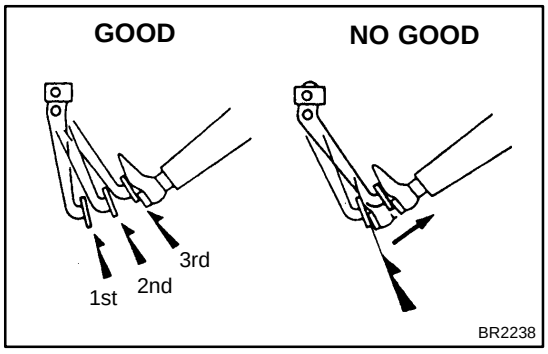

2. AIR TIGHTNESS CHECK

(a) Start the engine and stop it after 1 or 2 minutes. Depress the brake pedal several times slowly.

If the pedal goes down farthest the 1st time, but gradually rises after the 2nd or 3rd time, the booster is air tight.

(b) Depress the brake pedal while the engine is running, and stop the engine with the pedal depressed. If there is no change in the pedal reserve travel after holding the pedal for 30 seconds, the booster is air tight.

BR10G–01

COMPONENTS

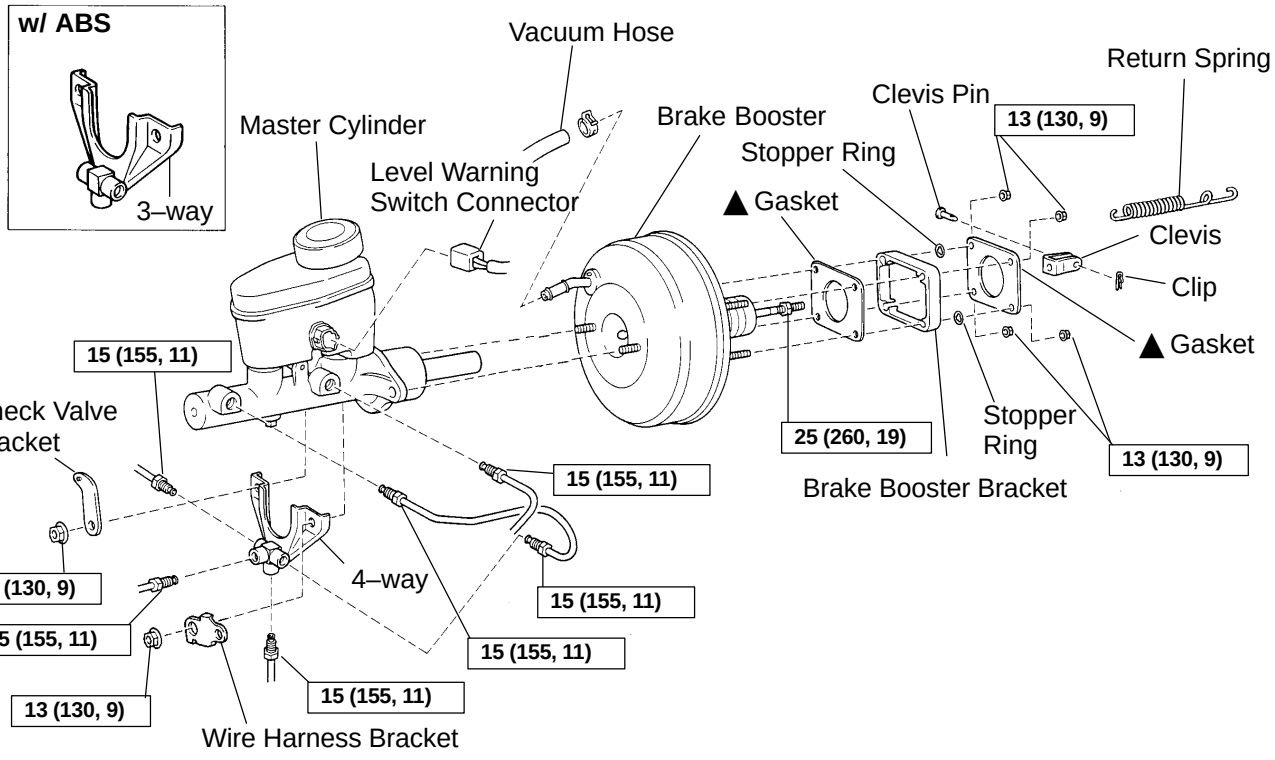

BR10H–01

REMOVAL

1. **REMOVE MASTER CYLINDER (See page BR–15)**
2. **DISCONNECT VACUUM HOSE FROM BRAKE BOOSTER**
3. **REMOVE SCUFF PLATE LH, COWL SIDE TRIM LH, LOWER FINISH PANEL AND NO. 2 HEATER TO REGISTER DUCT (See page BO–72)**
4. **REMOVE PEDAL RETURN SPRING**
5. **REMOVE CLIP AND CLEVIS PIN**

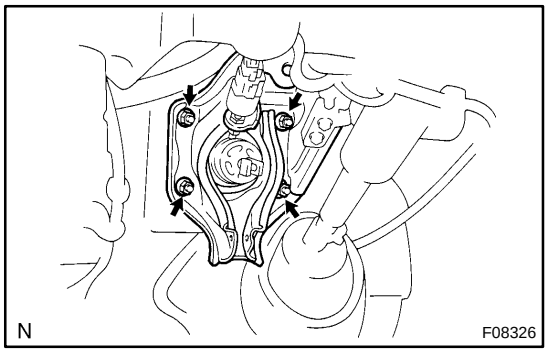

6. **REMOVE BRAKE BOOSTER**

(a) Remove the 4 nuts and clevis.

(b) Pull out the brake booster and gasket.

(c) Remove the 2 stopper rings, brake booster bracket and gasket from the brake booster.

BR10I–01

INSTALLATION

1. INSTALL BRAKE BOOSTER

(a) Install a new gasket to the brake booster.

(b) Install the brake booster bracket and 2 stopper rings to the brake booster.

(c) Install the booster and a new gasket.

(d) Install the clevis to the operating rod.

(e) Install and torque the booster installation nuts.
Torque: 13 N·m (130 kgf·cm, 9 ft·lbf)

(f) Install the clevis pin into the clevis and brake pedal, and install the clip to the clevis pin.

(g) Connect the vacuum hose to the brake booster.

2. INSTALL NO. 2 HEATER TO REGISTER DUCT, LOWER FINISH PANEL, COWL SIDE TRIM LH AND SCUFF PLATE (See page BO–79)

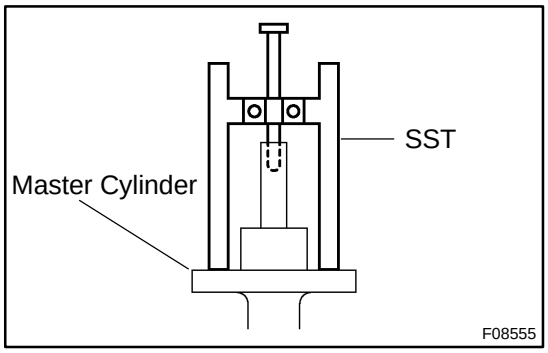

3. ADJUST LENGTH OF BOOSTER PUSH ROD

(a) Set the SST on the master cylinder, and lower the pin until its tip slightly touches the piston.
SST 09737–00011

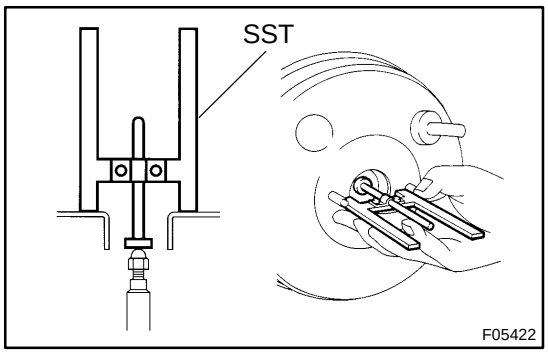

(b) Turn the SST upside down, and set it on the booster.
SST 09737–00011

(c) Measure the clearance between the booster push rod and pin head (SST).
Clearance: 0 mm (0 in.)

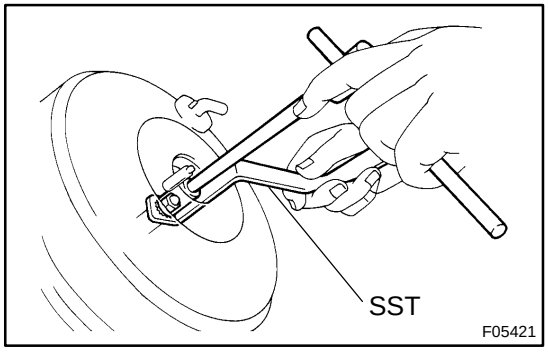

(d) Using SST, adjust the booster push rod length until the push rod lightly touches the pin head.
SST 09737–00020

4. INSTALL MASTER CYLINDER (See page BR–19)

5. FILL BRAKE RESERVOIR WITH BRAKE FLUID AND BLEED BRAKE SYSTEM (See page BR–4)

6. CHECK FOR FLUID LEAKAGE

7. CHECK AND ADJUST BRAKE PEDAL (See page BR–6)

8. DO OPERATIONAL CHECK (See page BR–20)

FRONT BRAKE PAD

COMPONENTS

BR10J–01

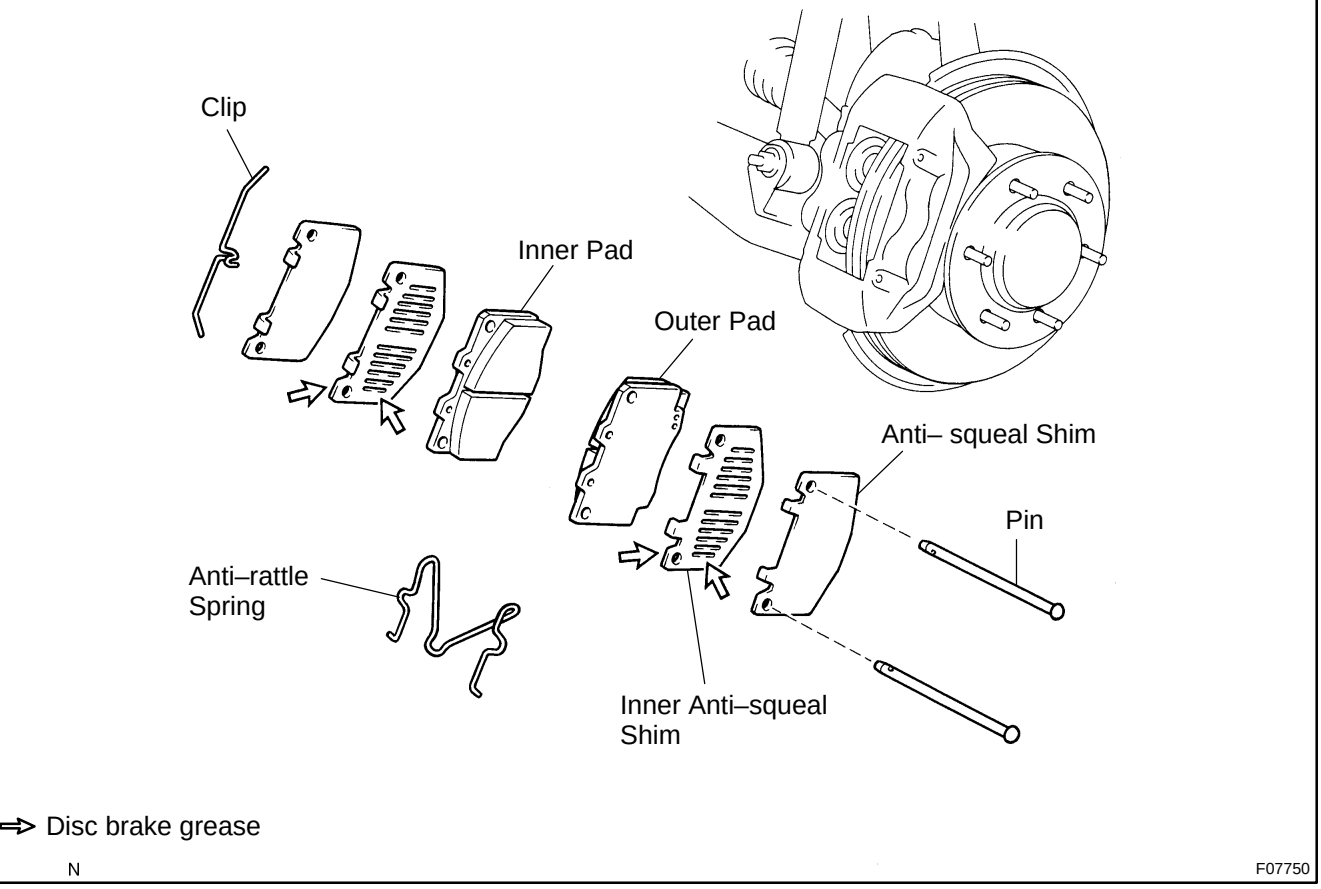

BR10K–01

REPLACEMENT

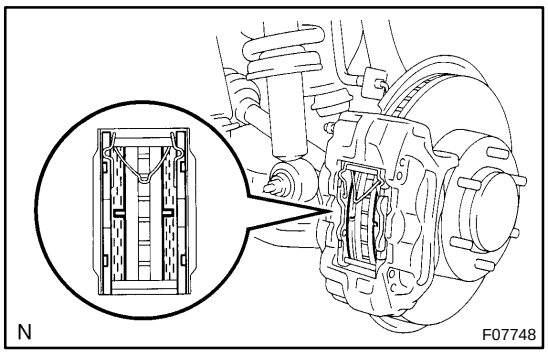

1. REMOVE FRONT WHEEL

2. INSPECT PAD LINING THICKNESS

Check the pad thickness and replace pads if not within specification.

Minimum thickness: 1.0 mm (0.039 in.)

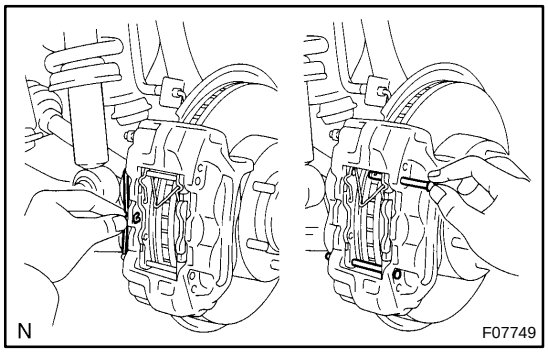

3. REMOVE CLIP, 2 PINS AND ANTI–RATTLE SPRING

4. REMOVE 2 PADS AND 4 ANTI–SQUEAL SHIMS

NOTICE:

The anti–rattle spring and clip can be used again provided that they have sufficient rebound, no deformation, cracks or wear, and have had all rust, dirt and foreign particles cleaned off.

5. CHECK DISC THICKNESS AND RUNOUT

(See page BR–29)

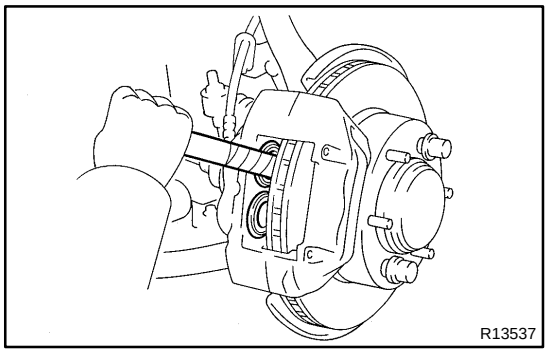

6. INSTALL NEW PADS

NOTICE:

When replacing worn pads, the anti–squeal shims must be replaced together with the pads.

(a) Draw out a small amount of brake fluid from the reservoir.

(b) Press in the pistons with a monkey wrench handle or equivalent.

HINT:

- Tape the monkey wrench handle before use.
- Always change the pad on one wheel at a time as there is a possibility of the opposite piston flying out.
- If the piston is difficult to push in, loosen the bleeder plug and push in the piston while letting some brake fluid escape.

(c) Install the anti–squeal shims to new pads.

HINT:

Apply disc brake grease to both sides of inner anti–squeal shims (See page BR–24).

(d) Install new pads.

NOTICE:

Do not allow oil or grease to get on the rubbing face.

7. INSTALL ANTI–RATTLE SPRING AND 2 PINS

8. INSTALL CLIP

9. INSTALL FRONT WHEEL

Torque: 113 N·m (1,150 kgf·cm, 83 ft·lbf)

10. DEPRESS BRAKE PEDAL SEVERAL TIMES

11. CHECK THAT FLUID LEVEL IS AT MAX LINE

FRONT BRAKE CALIPER

COMPONENTS

BR10L–01

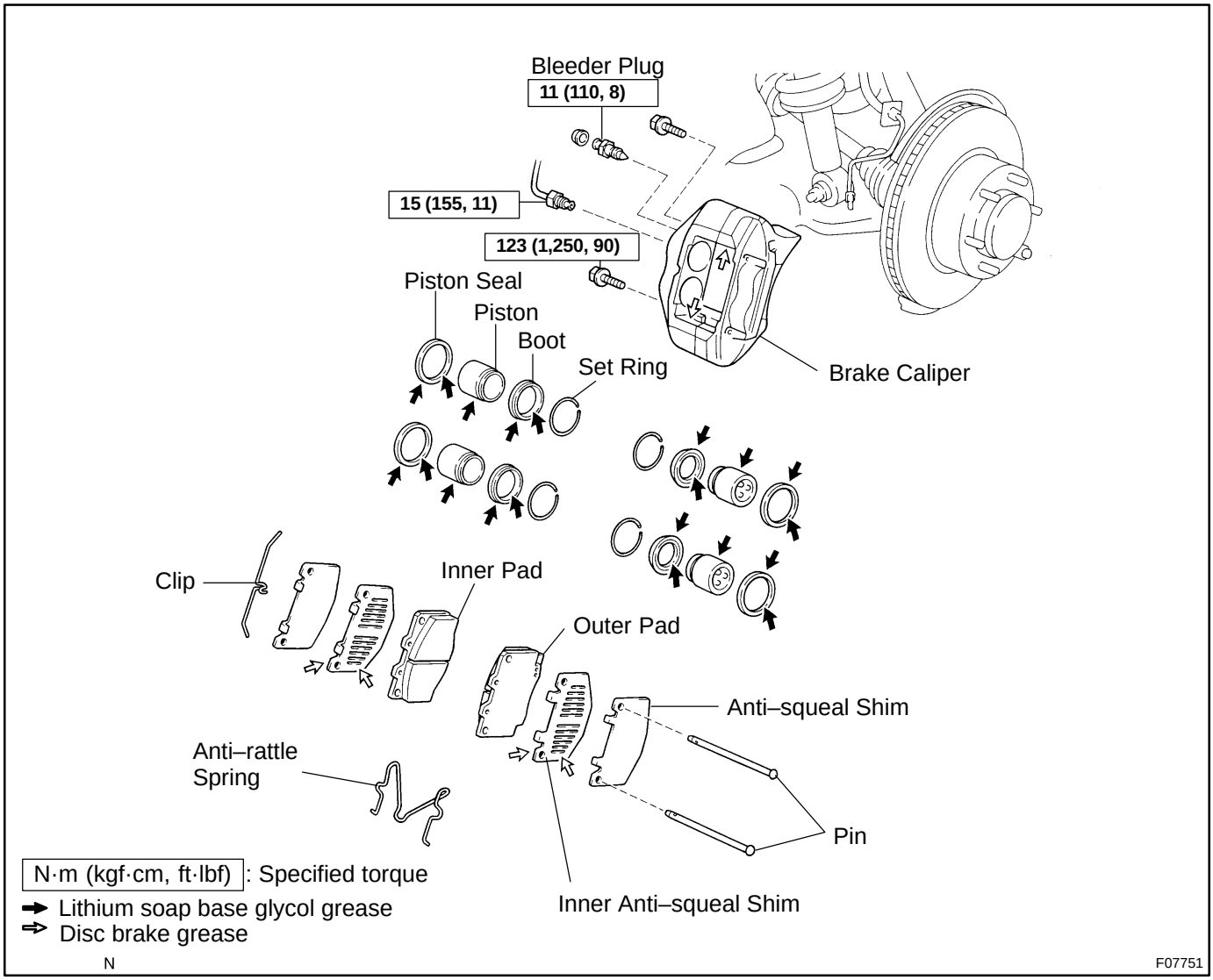

BR10M–01

REMOVAL

1. REMOVE FRONT WHEEL

Remove the wheel and temporarily fasten the disc with hub nuts.

Torque: 113 N·m (1,150 kgf·cm, 83 ft·lbf)

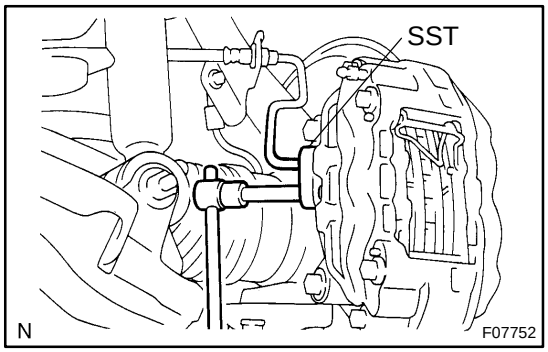

2. DISCONNECT BRAKE LINE

Using SST, disconnect the brake line. Use a container to catch the brake fluid.

SST 09023–00100

Torque: 15 N·m (155 kgf·cm, 11 ft·lbf)

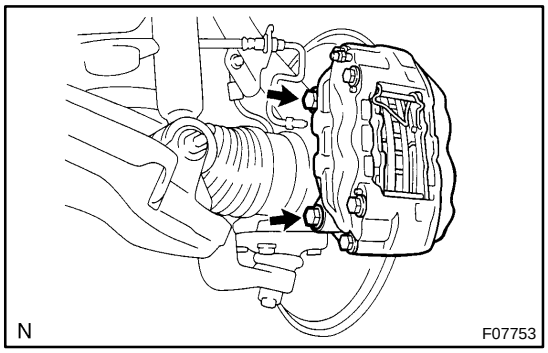

3. REMOVE CALIPER

Remove the 2 mounting bolts and caliper.

Torque: 123 N·m (1,250 kgf·cm, 90 ft·lbf)

4. REMOVE CLIP, 2 PINS AND ANTI–RATTLE SPRING

5. REMOVE 2 PADS AND 4 ANTI–SQUEAL SHIMS

NOTICE:

The anti–rattle spring and clip can be used again provided that they have sufficient rebound, no deformation, cracks or wear, and have had all rust, dirt and foreign particles cleaned off.

BR10N–01

DISASSEMBLY

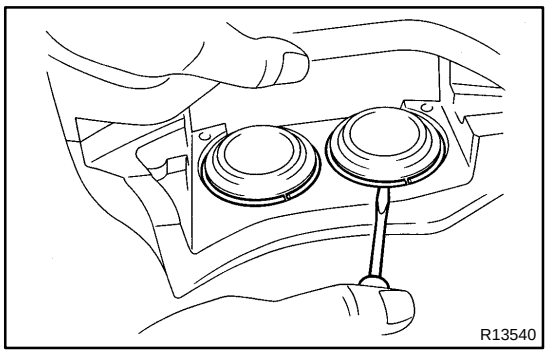

1. REMOVE CYLINDER BOOT SET RINGS AND BOOTS

Using a screwdriver, remove the 4 cylinder boot set rings and boots.

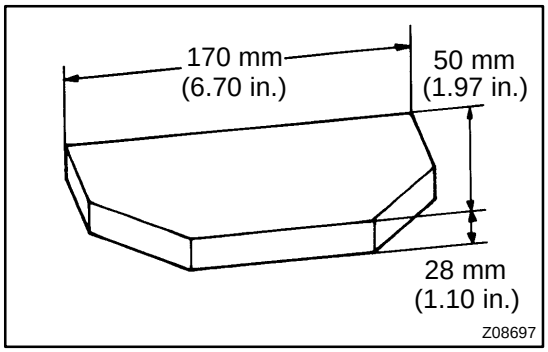

2. REMOVE PISTONS FROM CYLINDER

(a) Prepare the wooden plate to hold the pistons.

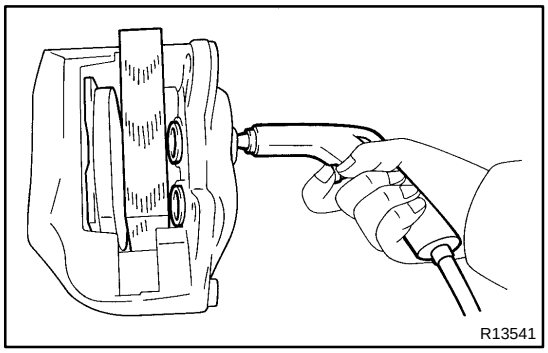

(b) Place the plate between the pistons and insert a pad at one side.

(c) Use compressed air to remove the pistons alternately from the cylinder.

CAUTION:

Do not place your fingers in front of the pistons when using compressed air.

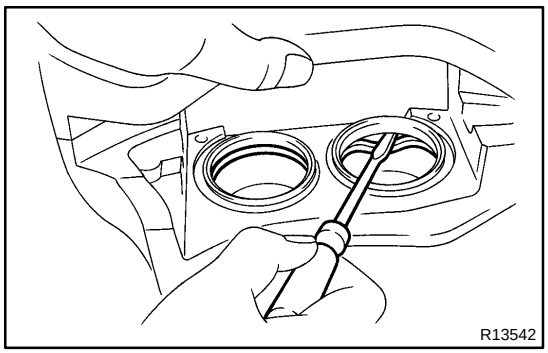

3. REMOVE PISTON SEALS

Using a screwdriver, remove the 4 piston seals from the cylinder.

BR10O–01

INSPECTION

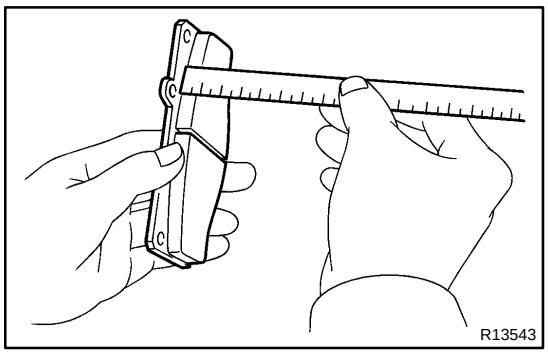

1. MEASURE PAD LINING THICKNESS

Using a ruler, measure the pad lining thickness.

Standard thickness: 11.5 mm (0.453 in.)

Minimum thickness: 1.0 mm (0.039 in.)

Replace the pad if the thickness is less than the minimum (the 1.0 mm slit is no longer visible), or if it shows signs of uneven wear.

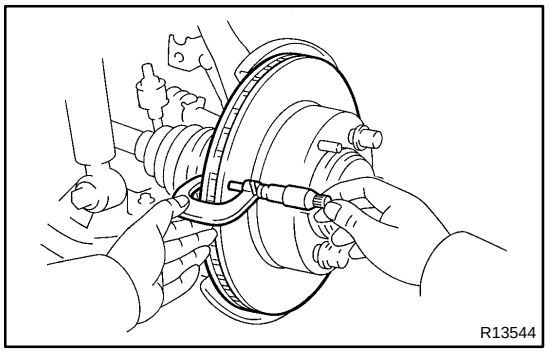

2. MEASURE DISC THICKNESS

Using a micrometer, measure the disc thickness.

Standard thickness: 28.0 mm (1.102 in.)

Minimum thickness: 26.0 mm (1.024 in.)

Replace the disc if the thickness of the disc is at the minimum or less. Replace the disc or grind it on a lathe if it is scored or worn unevenly.

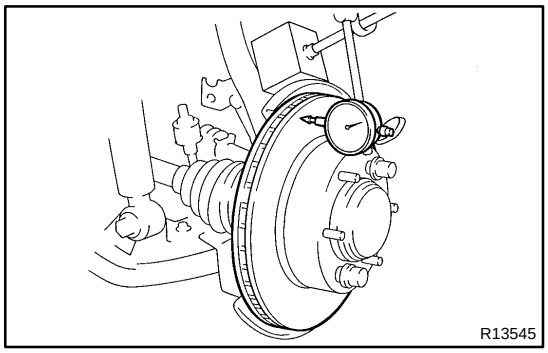

3. MEASURE DISC RUNOUT

Using a dial indicator, measure the disc runout at a position 10 mm (0.39 in.) from the outside edge.

Maximum disc runout: 0.07 mm (0.0028 in.)

If the runout is greater than the maximum, replace the disc or grind it on a ”On–Car” brake lathe.

HINT:

Before measuring the runout, confirm that the front hub bearing play is within the specification (See page SA–9).

4. IF NECESSARY, ADJUST DISC RUNOUT

(a) Remove the hub nuts and disc. Reinstall the disc 1/6 of a turn round from its original position on the hub. Install and torque the hub nuts.

Torque: 113 N·m (1,150 kgf·cm, 83 ft·lbf)

(b) Remeasure the disc runout. Make a note of the runout and the disc’s position on the hub.

(c) Repeat (a) and (b) until the disc has been installed on the 4 remaining hub positions.

If the minimum runout recorded in (a) to (c) is less than the maximum disc runout, install the disc in that position.

If the minimum runout recorded in (a) to (c) is greater than the maximum disc runout, replace the disc and repeat step 3.

BR10P–01

REASSEMBLY

Reassembly is in the reverse order of disassembly (See page BR–28).

NOTICE:

Apply lithium soap base glycol grease and disc brake grease to the parts indicated by the arrows (See page BR–26).

BR10Q–01

INSTALLATION

Installation is in the reverse order of removal (See page BR–27).

HINT:

- ▲ After installation, fill brake reservoir with brake fluid and bleed brake system (See page BR–4).
- ▲ Check for leaks.

REAR DRUM BRAKE

COMPONENTS

BR085–03

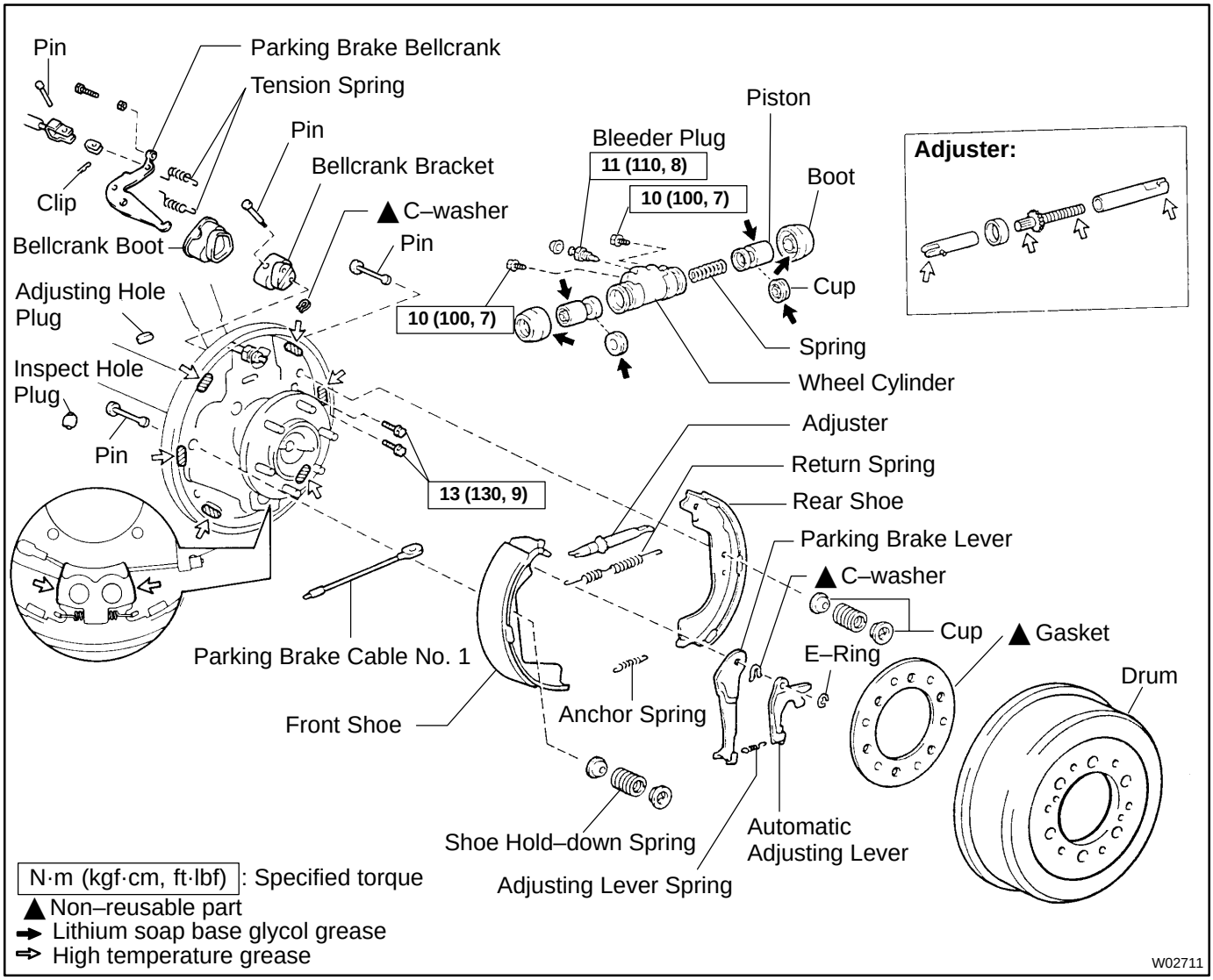

BR086–03

REMOVAL

1. INSPECT SHOE LINING THICKNESS

Remove the inspection hole plug, and check the shoe lining thickness through the hole.

If less than the minimum, replace the shoes.

Minimum thickness: 1.0 mm (0.039 in.)

2. REMOVE REAR WHEEL

Torque: 113 N·m (1,150 kgf·cm, 83 ft·lbf)

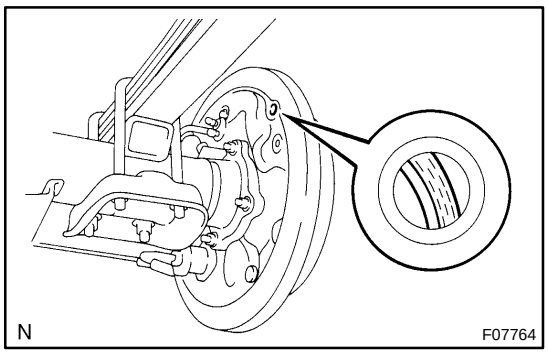

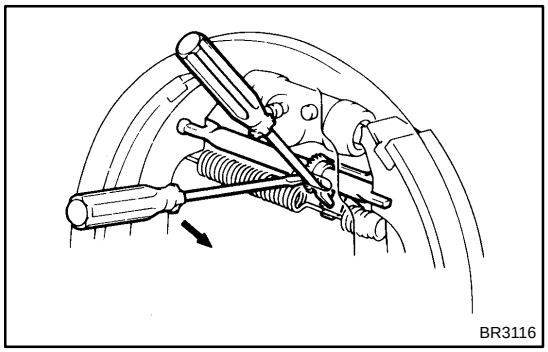

3. REMOVE BRAKE DRUM

(a) Release the parking brake lever or pedal and remove the brake drum.

HINT:

If the brake drum cannot be removed easily, do the following steps.

(b) Remove the adjusting hole plug from the backing plate.

(c) Insert a screwdriver through the hole in the backing plate, and hold the automatic adjusting lever away from the adjusting bolt.

(d) Using another screwdriver, reduce the brake shoe adjustment by turning the adjusting bolt.

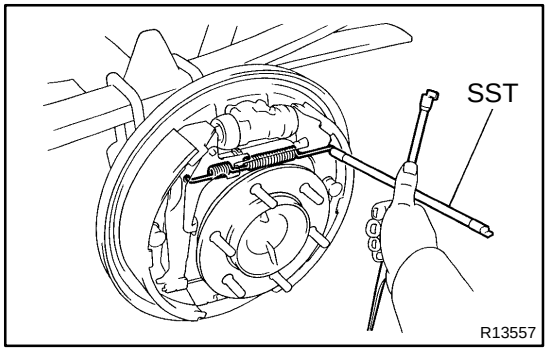

4. REMOVE REAR SHOE

(a) Using SST, disconnect the return spring from the rear shoe.

SST 09703–30010

(b) Remove the return spring from the front shoe.

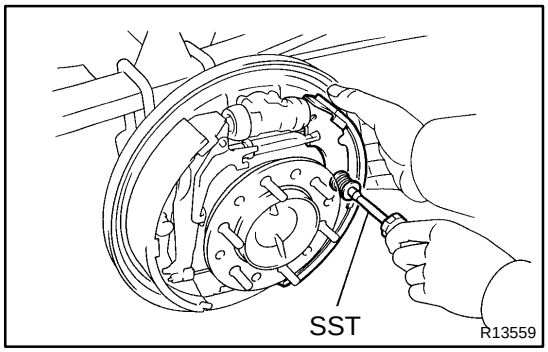

(c) Using SST, remove the shoe hold–down spring, 2 cups and pin.

SST 09718–00010

(d) Disconnect the anchor spring from the rear shoe and remove the rear shoe.

(e) Remove the anchor spring from the front shoe.

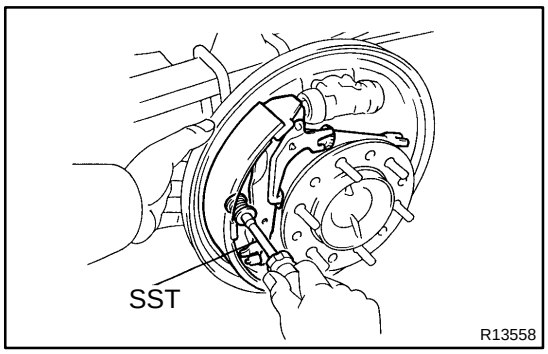

5. REMOVE FRONT SHOE

(a) Using SST, remove the shoe hold–down spring, 2 cups and pin.
SST 09718–00010

(b) Disconnect the parking brake cable No. 1 from the parking brake bellcrank.

(c) Remove the front shoe with adjuster.

(d) Disconnect the parking brake cable No. 1 from the front shoe.

6. REMOVE ADJUSTER FROM FRONT SHOE

(a) Remove the adjusting lever spring.

(b) Remove the adjuster.

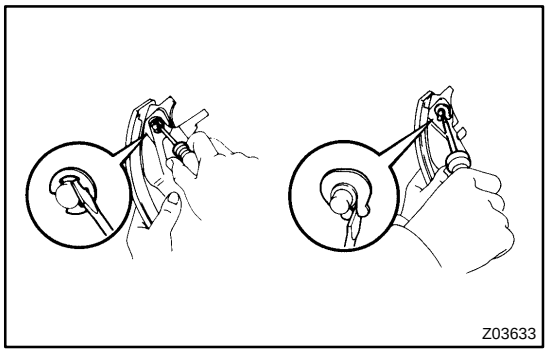

7. REMOVE AUTOMATIC ADJUSTING LEVER AND PARKING BRAKE LEVER

(a) Remove the E–ring.

(b) Remove the automatic adjusting lever.

(c) Remove the C–washer.

(d) Remove the parking brake lever.

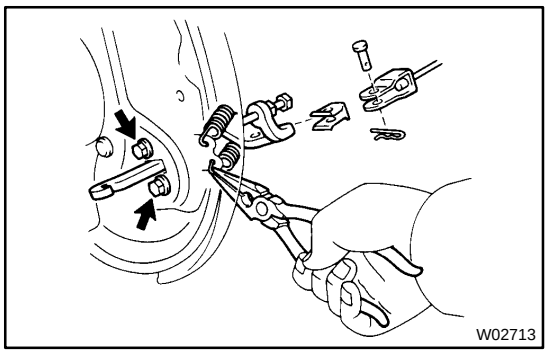

8. REMOVE AND DISASSEMBLE PARKING BRAKE BELLCRANK

(a) Remove the clip and pin and disconnect the parking brake cable.

(b) Remove the 2 tension springs.

(c) Remove the 2 bolts and bellcrank.
Torque: 13 N·m (130 kgf·cm, 9 ft·lbf)

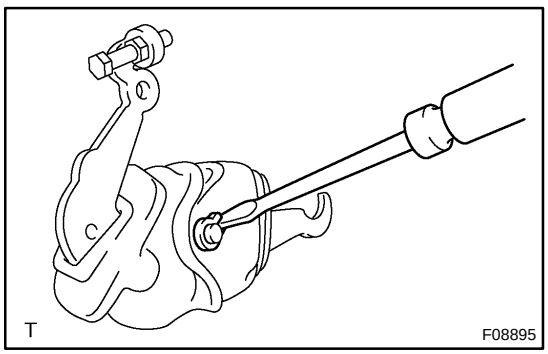

(d) Turn over the bellcrank boot and remove the C–washer and pin.

(e) Remove the bellcrank bracket and bellcrank boot from the parking brake bellcrank.

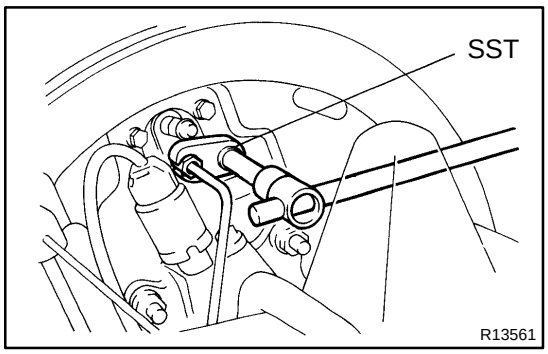

9. REMOVE WHEEL CYLINDER

(a) Using SST, disconnect the brake line. Use a container to catch the brake fluid.
SST 09023–00100
Torque: 15 N·m (155 kgf·cm, 11 ft·lbf)

(b) Remove the 2 bolts and the wheel cylinder.
Torque: 10 N·m (100 kgf·cm, 7 ft·lbf)

10. DISASSEMBLE WHEEL CYLINDER

(a) Remove the 2 boots, 2 pistons and spring.

(b) Remove the 2 piston cups from each piston.

BR087–03

INSPECTION

1. INSPECT DISASSEMBLED PARTS

Inspect the disassembled parts for wear, rust or damage.

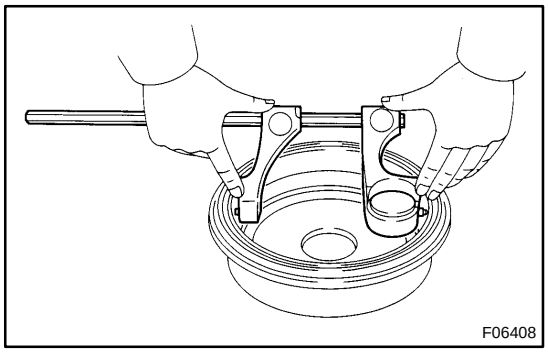

2. MEASURE BRAKE DRUM INSIDE DIAMETER

Using brake drum gauge or equivalent, measure the inside diameter of the drum.

Standard inside diameter: 295.0 mm (11.614 in.)

Maximum inside diameter: 297.0 mm (11.693 in.)

If the drum is scored or worn, the brake drum may be lathed to the maximum inside diameter.

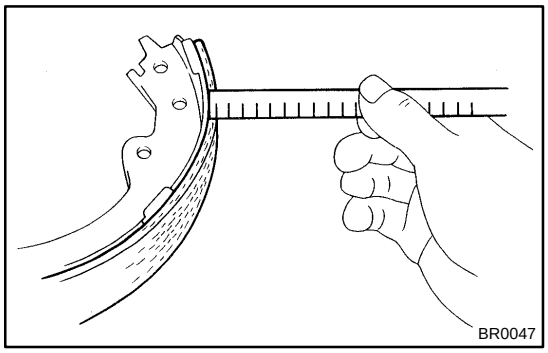

3. MEASURE BRAKE SHOE LINING THICKNESS

Using a ruler, measure the shoe lining thickness.

Standard thickness: 6.0 mm (0.236 in.)

Minimum thickness: 1.0 mm (0.039 in.)

If the shoe lining is less than the minimum, or shows signs of uneven wear, replace the brake shoes.

HINT:

If any of the brake shoes have to be replaced, replace all of the rear brake shoes in order to maintain even braking.

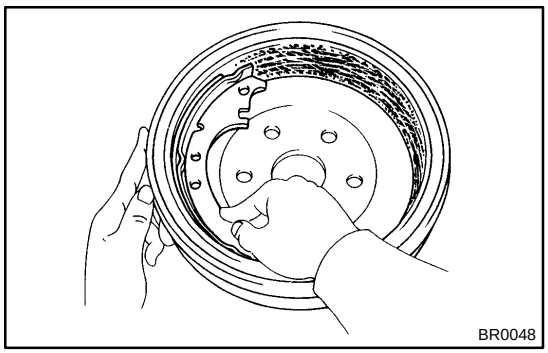

4. INSPECT BRAKE LINING AND DRUM FOR PROPER CONTACT

If the contact between the brake lining and drum is improper, repair the lining with a brake shoe grinder, or replace the brake shoe assembly.

BR10R–01

INSTALLATION

Installation is in the reverse order of removal (See page BR–33).

NOTICE:

Apply lithium soap base glycol grease and high temperature grease to the parts indicated by the arrows (See page BR–32).

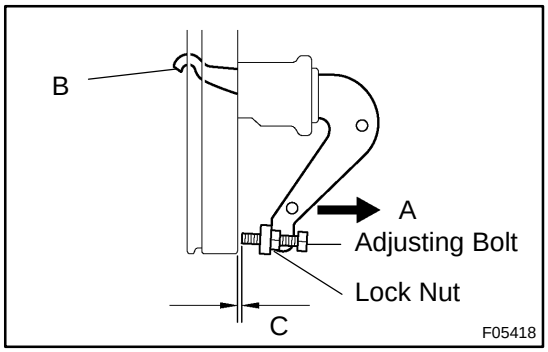

1. ADJUST BELLCRANK

(a) Lightly pull the bellcrank in direction A until there is no slack at part B.

(b) In this condition, turn the adjusting bolt so that dimension C will be 0.4 – 0.8 mm (0.016 – 0.031 in.).

(c) Lock the adjusting bolt with the lock nut.

(d) Connect the parking brake cable to the parking brake bellcrank and install the pin and clip.

(e) Install the 2 tension springs.

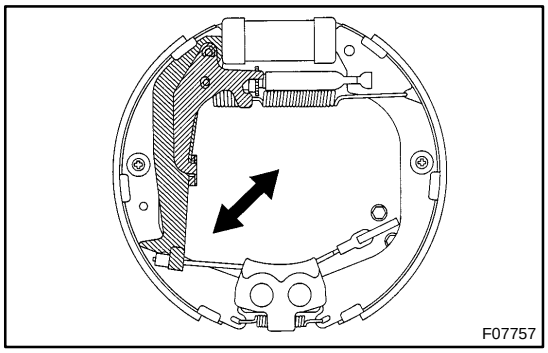

2. CHECK OPERATION OF AUTOMATIC ADJUSTING MECHANISM

(a) Move the parking brake lever of the front shoe back and forth. Check that the adjuster turns.

If the adjuster does not turn, check for incorrect installation of the rear brakes.

(b) Adjust the adjuster length as short as possible.

(c) Install the brake drum.

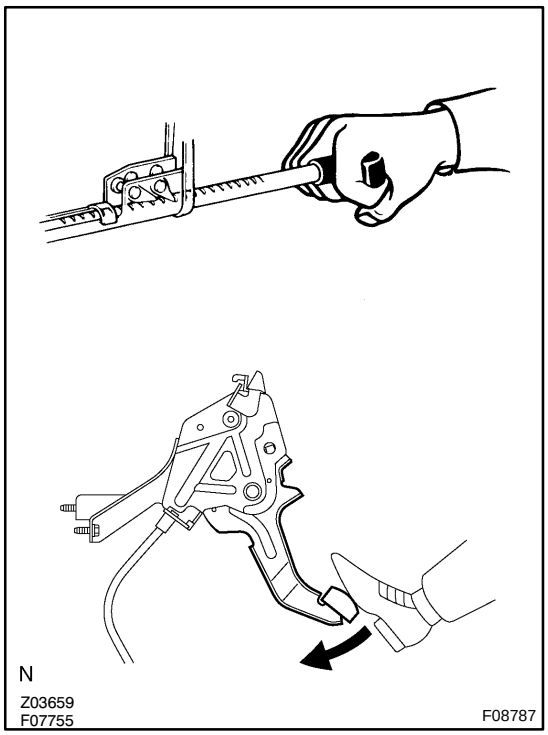

(d) Pull the parking brake lever all the way up or depress the parking brake pedal all the way until a clicking sound can no longer be heard.

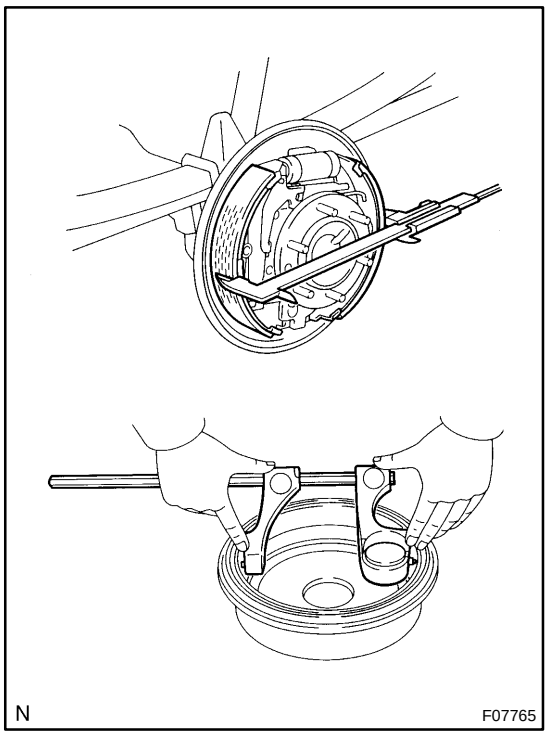

3. CHECK CLEARANCE BETWEEN BRAKE SHOES AND DRUM

(a) Remove the drum.

(b) Measure the brake drum inside diameter and diameter of the brake shoes. Check that the difference between the diameters is the correct shoe clearance.

Shoe clearance: 0.5 mm (0.020 in.)

If it is incorrect, check the parking brake system.

4. FILL BRAKE RESERVOIR WITH BRAKE FLUID

5. BLEED BRAKE SYSTEM (See page BR–4)

6. CHECK FOR LEAKS

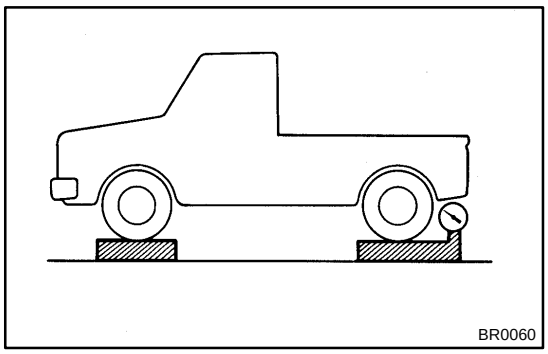

LOAD SENSING PROPORTIONING AND BY–PASS VALVE (LSP & BV)

BR09R–05

ON–VEHICLE INSPECTION

1. SET REAR AXLE LOAD

Rear axle load (includes vehicle weight):
Standard cab: 950 kg (2,094 lb)
Access cab:
5VZ–FE engine: 1,000 kg (2,205 lb)
2UZ–FE engine: 1,050 kg (2,315 lb)

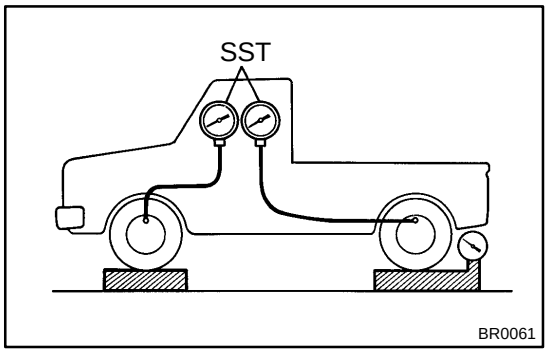

2. INSTALL LSPV GAUGE (SST) AND BLEED AIR

SST 09709–29018

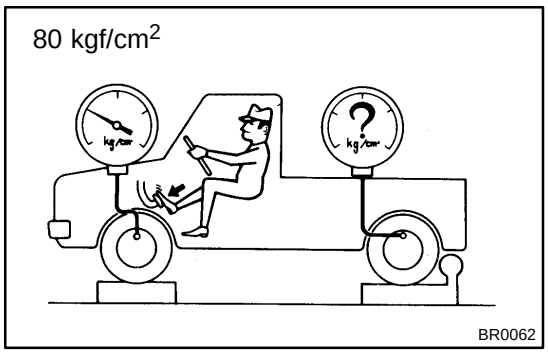

3. RAISE FRONT BRAKE PRESSURE TO 7,845 kPa (80 kgf/cm^2, 1,138 psi) AND CHECK REAR BRAKE PRESSURE

Rear brake pressure:
5,110 ± 490 kPa (52.1 ± 5 kgf/cm^2, 741 ± 71 psi)

HINT:

The brake pedal should not be depressed twice and/or returned while setting to the specified pressure. Read the value of rear brake pressure after holding the specified fluid pressure for 2 seconds. If the brake pressure is incorrect, adjust the fluid pressure.

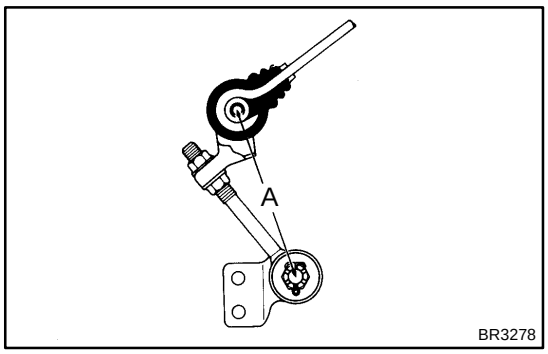

4. IF NECESSARY, ADJUST FLUID PRESSURE

(a) Loosen the lock nut.

(b) Adjust the length of the shackle No. 2.

Low pressure: Lengthen A

High pressure: Shorten A

Initial set: 120 mm (4.72 in.)

Adjustment range: 112 – 128 mm (4.41 – 5.04 in.)

HINT:

One turn of the nut changes the fluid pressure as shown in the following specification.

7.4 kPa (0.76 kgf/cm, 11 psi)

(c) Torque the lock nut.

Torque: 13 N·m (130 kgf·cm, 9 ft·lbf)

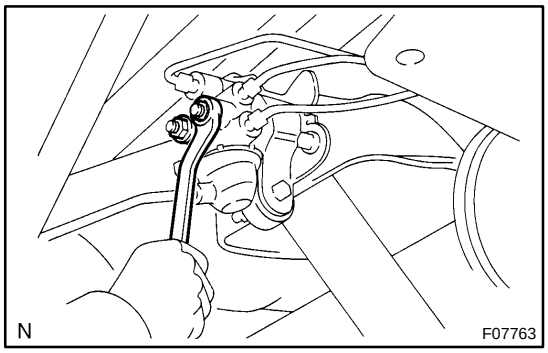

(d) If the pressure cannot be adjusted by the shackle No. 2, raise or lower the valve body.

Low pressure–Lower body

High pressure–Raise body

(e) Torque the nuts.

Torque: 13 N·m (130 kgf·cm, 9 ft·lbf)

(f) Adjust the length of the shackle No. 2 again.

If it cannot be adjusted, inspect the valve body.

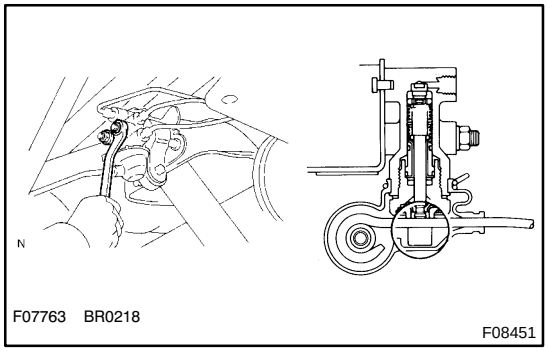

5. IF NECESSARY, CHECK VALVE BODY

(a) Assemble the valve body in the uppermost position.

HINT:

When the brakes are applied, the piston will move down about 0.8 mm (0.03 in.). Even at this time, the piston should not make contact with the load sensing spring or move it.

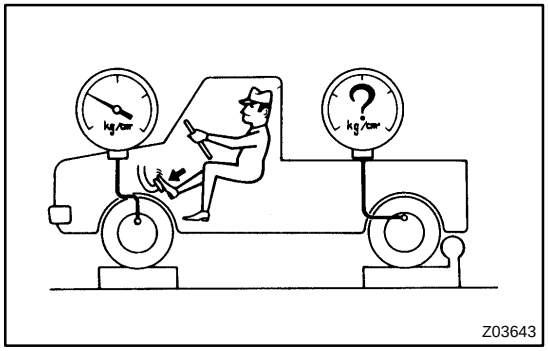

(b) In this position, check the rear brake pressure.

Front brake pressure kPa (kgf/cm^2, psi)	Rear brake pressure kPa (kgf/cm^2, psi)
1,470 (15, 213)	1,470 (15, 213)
3,922 (40, 569)	2,210 ± 390 (22.5 ± 4, 320 ± 57)
13,720 (140, 1,990)	5,150 ± 590 (52.5 ± 6, 767 ± 85)

If the measured value is not within the standard, replace the valve body.

BR09S–05

COMPONENTS

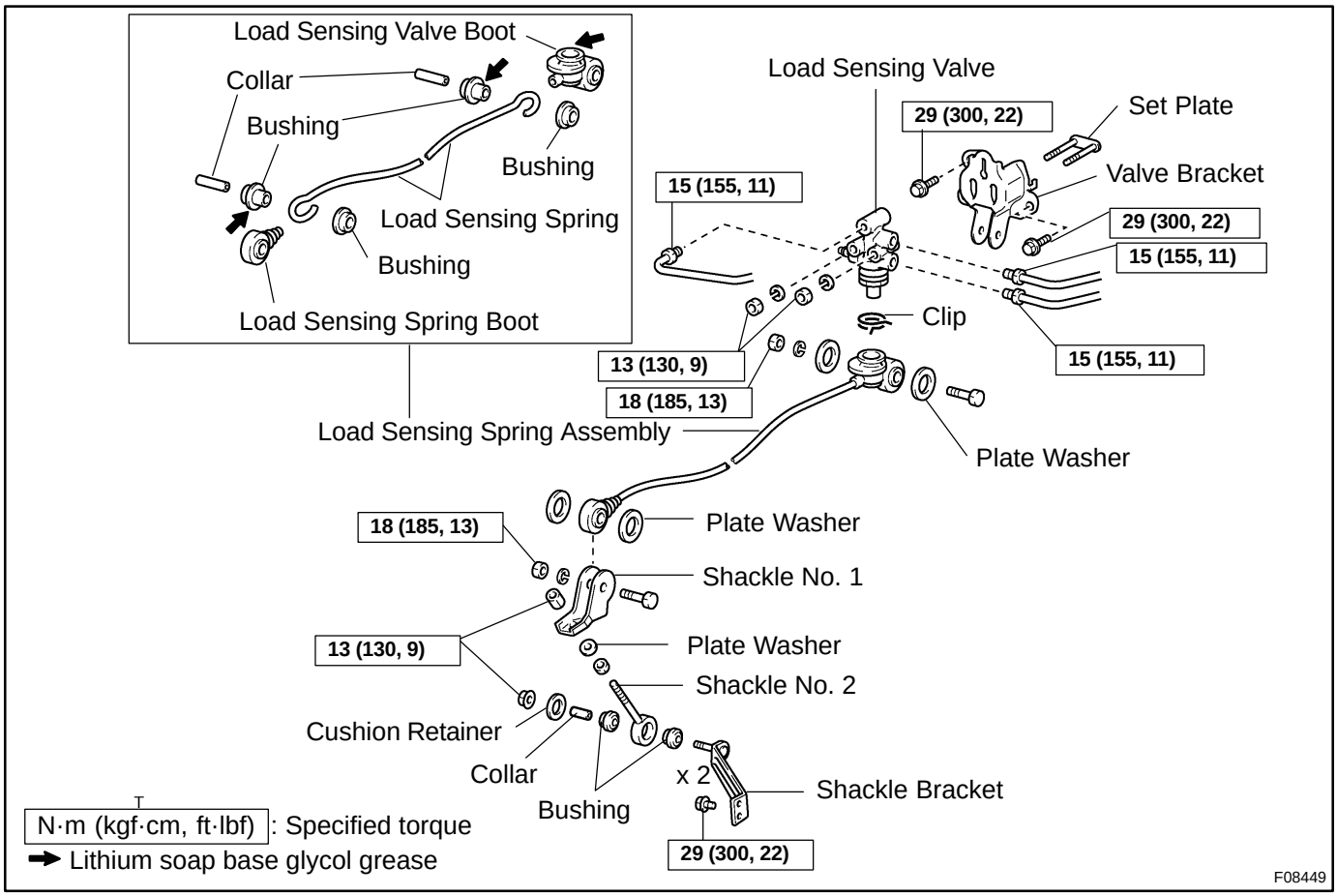

BR09T–02

REMOVAL

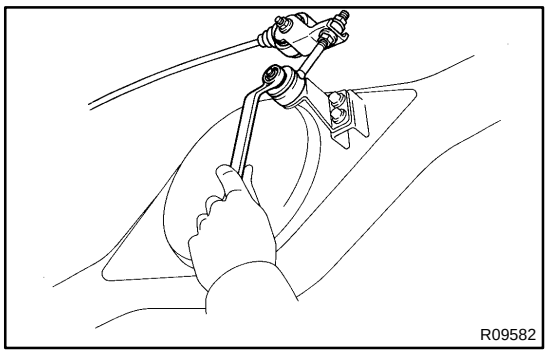

1. DISCONNECT SHACKLE NO. 2 FROM BRACKET

(a) Remove the nut and cushion retainer, and disconnect the shackle No. 2.

(b) Remove the 2 bushings and collar.

(c) Remove the 2 bolts and shackle bracket.

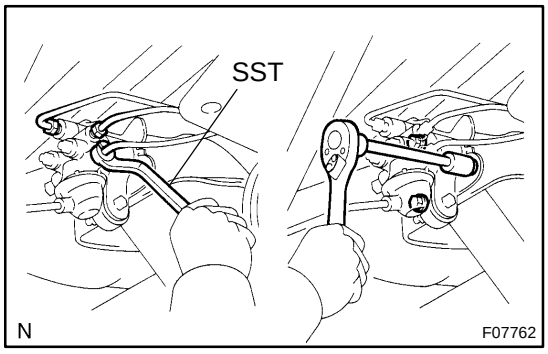

2. REMOVE LSP & BV ASSEMBLY

(a) Using SST, disconnect the 3 brake lines from the valve body.

SST 09751–36011

(b) Remove the 2 valve bracket mounting bolts and the LSP & BV assembly.

BR10S–01

DISASSEMBLY

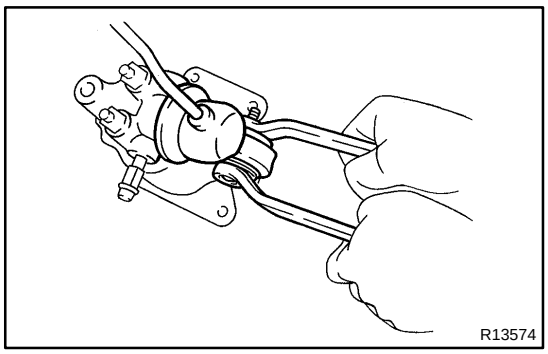

1. REMOVE VALVE BRACKET

(a) Remove the nut, washer, bolt and 2 plate washers.

(b) Remove the 2 nuts, 2 washers, set plate and valve bracket from the valve body.

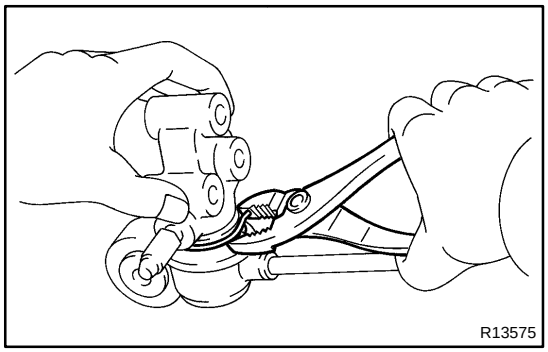

2. DISCONNECT SPRING FROM VALVE

Using pliers, remove the clip, and remove the spring from the valve.

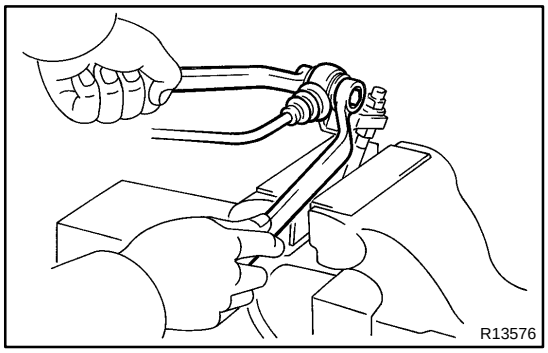

3. REMOVE SHACKLES NO. 1 AND NO. 2

(a) Remove the nut washer and bolt, and remove the load sensing spring and 2 plate washers.

(b) Loosen the 2 nuts and plate washer plate, and remove the shackle No. 1 from the shackle No. 2.

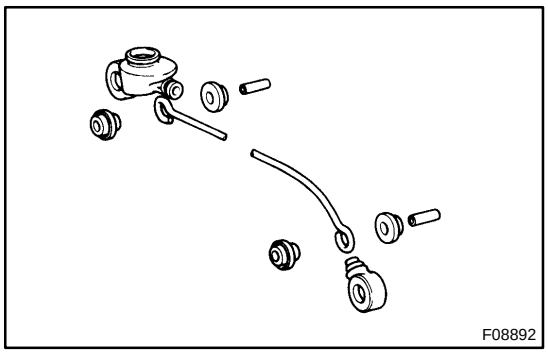

4. DISASSEMBLE LOAD SENSING SPRING

(a) Remove the 4 bushings and 2 collars.

(b) Remove the load sensing valve boot and load sensing spring boot.

BR09V–05

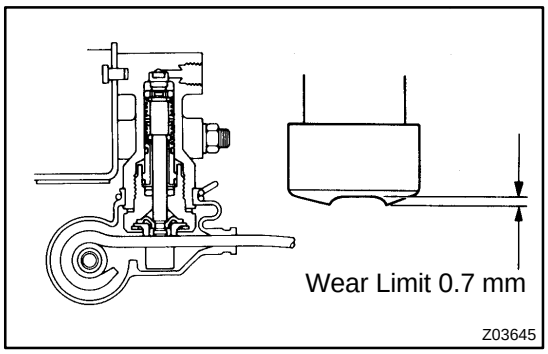

INSPECTION

INSPECT VALVE PISTON PIN AND LOAD SENSING CONTACT SURFACE FOR WEAR

Wear limit: 0.7 mm (0.028 in.)

BR10T–01

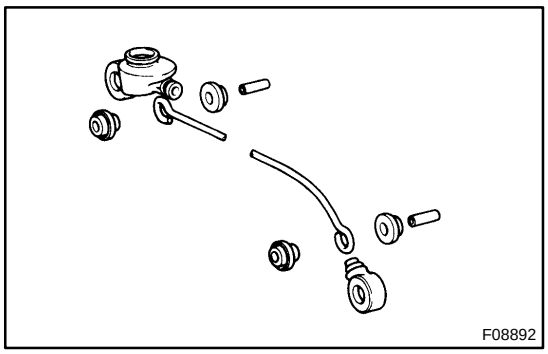
F08892

REASSEMBLY

1. ASSEMBLE LOAD SENSING SPRING

(a) Install the load sensing valve boot and load sensing spring boot.

(b) Install the 2 collars and 4 bushings.

HINT:

▲ Apply lithium soap–base glycol grease to all rubbing areas.

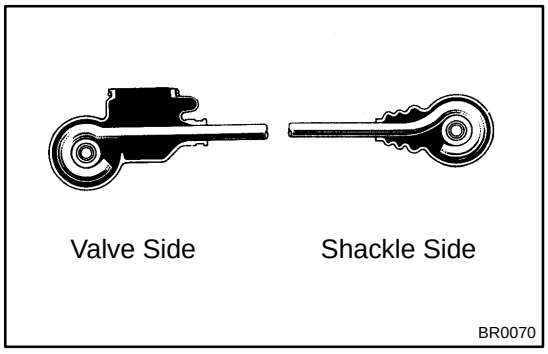

▲ Do not mistake the valve side for the shackle side of the load sensing spring.

2. INSTALL SHACKLE NO. 1 AND NO. 2

Install the lock nut, plate washer and shackle No. 1 to the shackle No. 2 then install the upper nut.

Torque: 13 N·m (130 kgf·cm, 9 ft·lbf)

3. INSTALL LOAD SENSING SPRING TO SHACKLE NO. 1

(a) Install the load sensing spring and 2 plate washers to the shackle No. 1.

(b) Install the bolt, washer and nut.

Torque: 18 N·m (185 kgf·cm, 13 ft·lbf)

4. INSTALL LOAD SENSING SPRING TO VALVE BODY

Install the load sensing spring to the load sensing valve with the clip.

5. INSTALL VALVE BRACKET

(a) Install the set plate to the load sensing valve through the valve bracket and temporarily tighten the 2 washers and 2 nuts.

(b) Install the load sensing spring assembly, 2 plate washers, bolt, washer and nut.

Torque: 18 N·m (185 kgf·cm, 13 ft·lbf)

BR09X–02

INSTALLATION

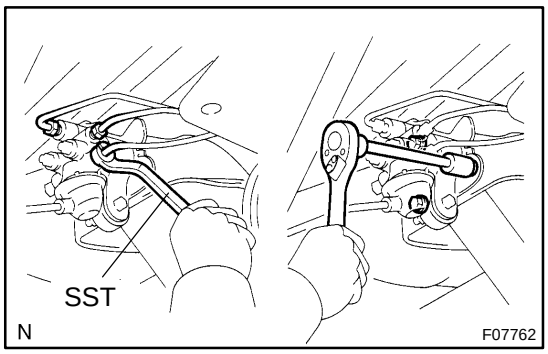

1. INSTALL LSP & BV ASSEMBLY TO FRAME

Install the LSP & BV assembly and 2 valve bracket mounting bolts.

Torque: 29 N·m (300 kgf·cm, 22 ft·lbf)

2. CONNECT BRAKE LINE

Using SST, connect the 3 brake lines.

Torque: 15 N·m (155 kgf·cm, 11 ft·lbf)

SST 09751–36011

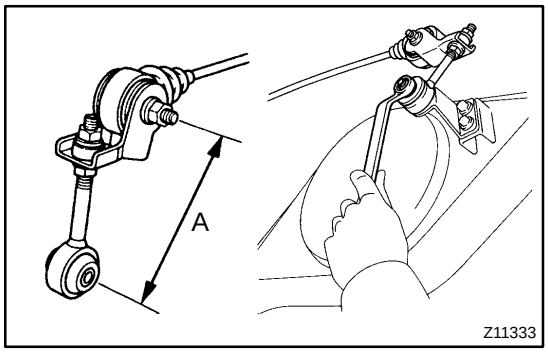

3. CONNECT SHACKLE NO. 2 BRACKET

(a) Set dimension A and torque the lock nut.

Initial set: 120 mm (4.72 in.)

Torque: 13 N·m (130 kgf·cm, 9 ft·lbf)

(b) Install the shackle bracket and 2 bolts.

Torque: 29 N·m (300 kgf·cm, 22 ft·lbf)

(c) Connect the 2 bushings, collar and shackle No. 2 to the shackle bracket.

Torque: 13 N·m (130 kgf·cm, 9 ft·lbf)

(d) Install the cushion retainer and nut.

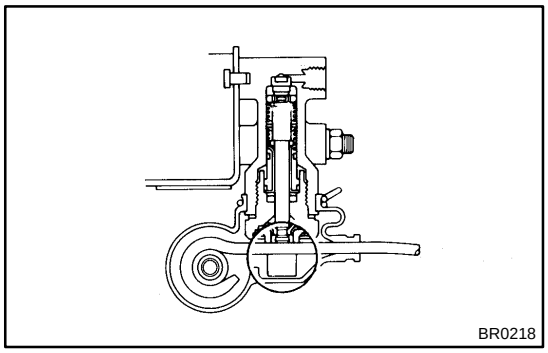

4. SET REAR AXLE LOAD (See page BR–39)

5. SET VALVE BODY

(a) When pulling down the load sensing spring, check that the valve piston moves down smoothly.

(b) Position the valve body so that the valve piston lightly contacts with the load sensing spring.

(c) Tighten the 2 valve body mounting nuts.

Torque: 13 N·m (130 kgf·cm, 9 ft·lbf)

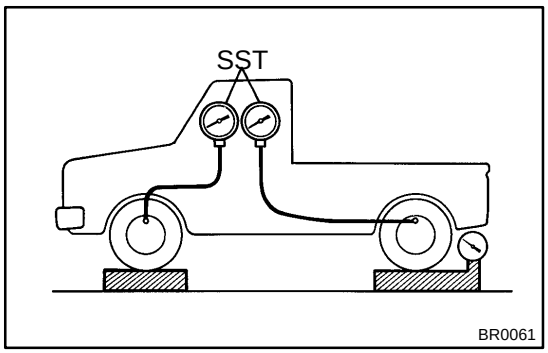

6. BLEED BRAKE LINE (See page BR–4)

7. CHECK AND ADJUST LSP & BV FLUID PRESSURE (See page BR–39)

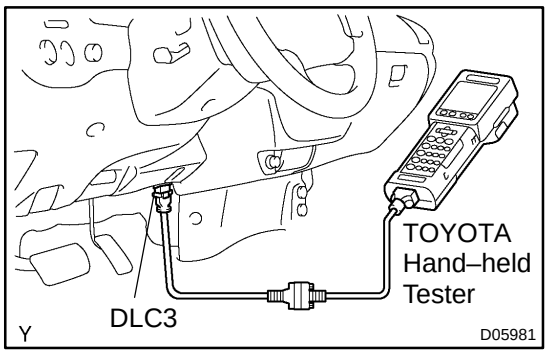

ABS ACTUATOR

BR10Z–01

ON–VEHICLE INSPECTION

1. CONNECT TOYOTA HAND–HELD TESTER

(a) Connect the TOYOTA hand–held tester to the DLC3.

(b) Start the engine and run it at idle.

(c) Select the ACTIVE TEST mode on the TOYOTA hand–held tester.

HINT:

Please refer to the TOYOTA hand–held tester operator's manual for further details.

2. INSPECT ABS ACTUATOR MOTOR OPERATION

(a) Check that the operation sound of the ABS actuator motor can be heard when the motor relay is turned ON by the TOYOTA hand–held tester.

NOTICE:

Do not keep motor relay ON for more than 5 seconds continuously. When operating it continuously, set the interval of more than 20 seconds.

If the operation sound can be heard, replace the ABS actuator because the motor operation is in failure.

(b) Turn the motor relay OFF.

3. INSPECT RIGHT FRONT WHEEL SOLENOID

(a) Depress the brake pedal and hold it for about 15 seconds, and check that the brake pedal does not go down further.

If the brake pedal goes down, replace the ABS actuator because the sealing condition of the reduction solenoid valve is abnormal.

(b) Check that the brake pedal does not pulsate when the motor relay is turned ON by the TOYOTA hand–held tester.

NOTICE:

Do not keep motor relay ON for more than 5 seconds continuously. When operating it continuously, set the interval of more than 20 seconds.

If there is a pulsation in the brake pedal, replace the ABS actuator because the sealing condition of the reduction solenoid valve is abnormal.

(c) Turn the motor relay OFF.

(d) Depress the brake pedal and hold it until the step (g) is completed.

(e) Check that the brake pedal does not go down further when the SFRH and SFRR solenoids are turned ON by the TOYOTA hand–held tester.

NOTICE:

Do not keep solenoid ON for more than 2 seconds continuously. When operating it continuously, set the interval of more than 20 seconds.

If the brake pedal goes down, replace the ABS actuator because the holding solenoid valve operation is abnormal.

HINT:
To prevent the solenoids, TOYOTA hand–held tester turns OFF automatically 2 secs. after has been turned ON simultaneously.

(f) Check that the brake pedal goes down further when the solenoids are turned OFF.

If the brake pedal does not go down, replace the ABS actuator because the reduction solenoid valve operation is abnormal.

(g) Check that the brake pedal returns when the motor relay is turned ON by the TOYOTA hand–held tester.

NOTICE:

Do not keep motor relay ON for more than 5 seconds continuously. When operating it continuously, set the interval of more than 20 seconds.

If the brake pedal does not return, replace the ABS actuator because the motor operation is in failure.

(h) Turn the motor relay OFF and release the brake pedal.

4. INSPECT OTHER WHEEL SOLENOIDS OPERATION

Check the solenoids of the other wheels with the same inspection procedure as the right front wheel solenoids.

HINT:
Left front wheel: SFLH and SFLR
Right rear wheel: SRRH and SRRR
Left rear wheel: SRLH and SRLR

NOTICE:

Never depress the brake pedal under the condition that the reduction solenoid alone is turned ON as ABS ECU is reset.

5. CLEAR DTC (See page DI–448)

BR10U–01

COMPONENTS

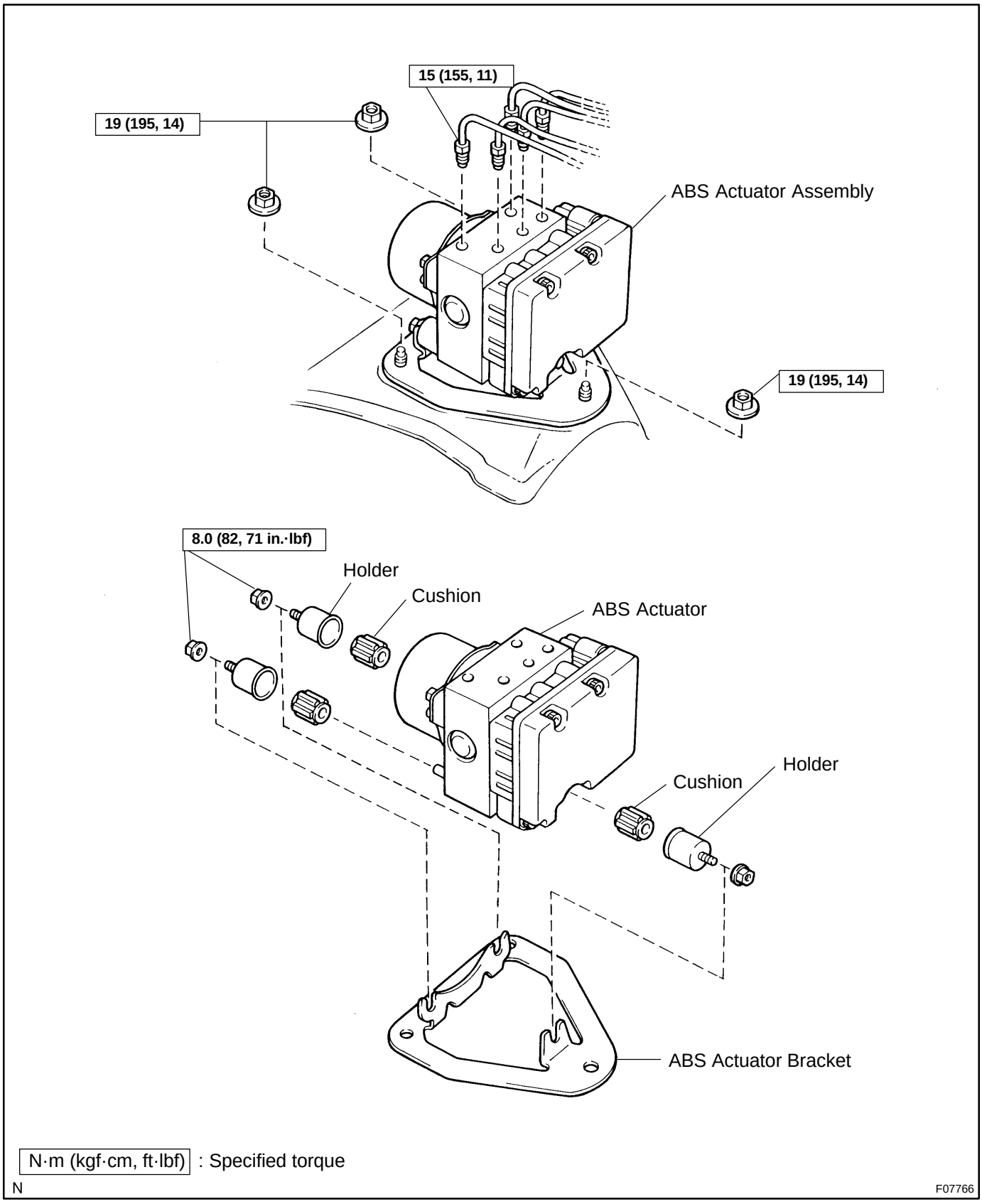

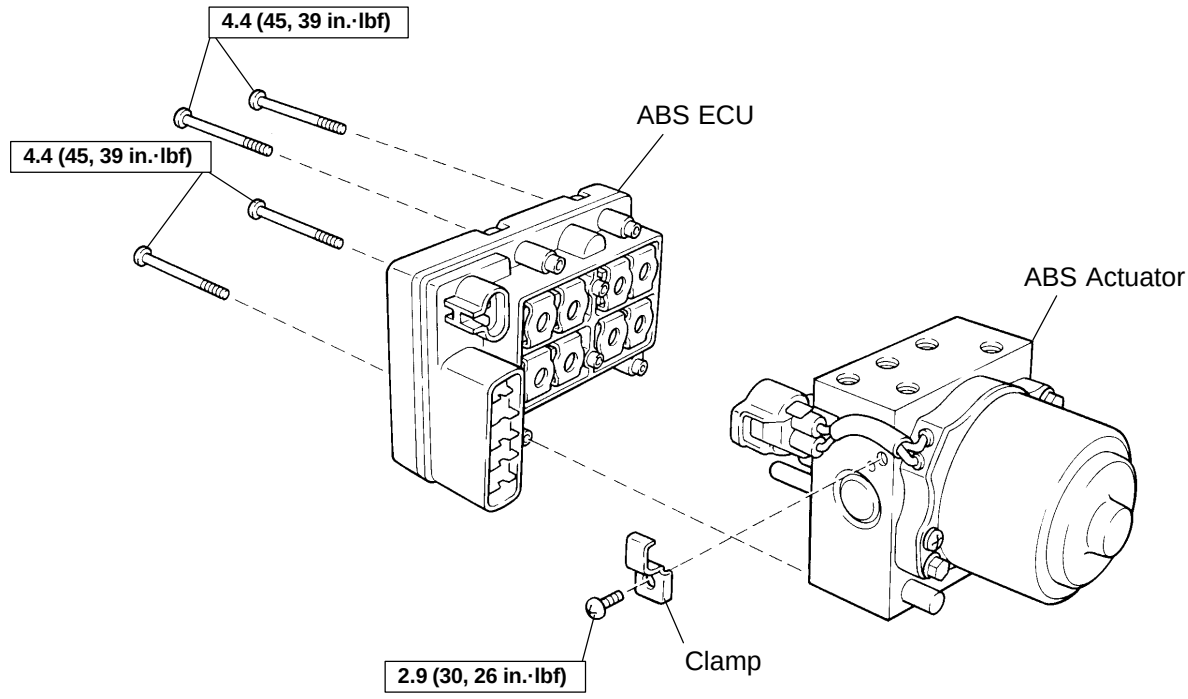

N·m (kgf·cm, ft·lbf) : Specified torque

F08427

BR10V–01

REMOVAL

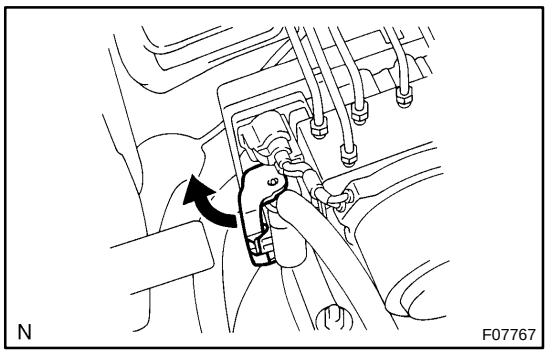

1. REMOVE BRAKE LINE COVER

2. DISCONNECT CONNECTOR

Pull out the release bar, and disconnect the connector.

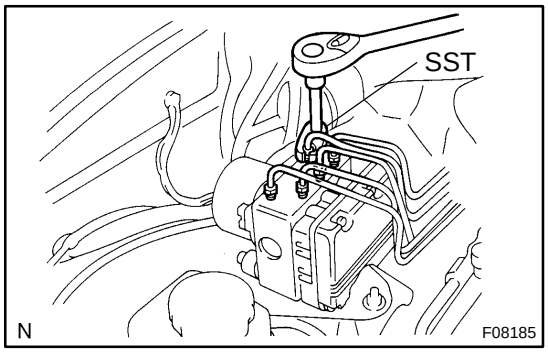

3. DISCONNECT BRAKE LINES

Using SST, disconnect the 5 brake lines from the ABS actuator.

SST 09023–00100

Torque: 15 N·m (155 kgf·cm, 11 ft·lbf)

4. REMOVE ABS ACTUATOR ASSEMBLY

Remove the 3 nuts and ABS actuator assembly.

Torque: 19 N·m (195 kgf·cm, 14 ft·lbf)

5. REMOVE ABS ACTUATOR

(a) Remove the 3 nuts and ABS actuator from the actuator bracket.

Torque: 8.0 N·m (82 kgf·cm, 71 in.·lbf)

(b) Remove the 3 holders and 3 cushions from the ABS actuator.

BR10W–01

DISASSEMBLY

1. DISCONNECT CONNECTOR

(a) Remove the screw and clamp from the ABS actuator.

Torque: 2.9 N·m (30 kgf·cm, 26 in.·lbf)

(b) Disconnect the connector.

2. REMOVE ABS ECU

Using a hexagon wrench (4 mm), remove the 4 bolts and ABS ECU.

Torque: 4.4 N·m (45 kgf·cm, 39 in.·lbf)

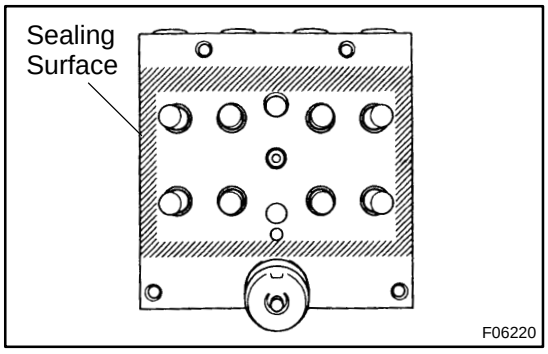

NOTICE:

Protect the actuator in order to prevent sealing surface from getting dirty and causing damage on the valve body. If the dirt and the like is stuck to the sealing surface, use plastic tools or soft objects to remove the dirt. Do not use chemical solvents.

BR10X–01

REASSEMBLY

Reassembly is in the reverse order of disassembly (See page BR–52).

BR10Y–01

INSTALLATION

Installation is in the reverse order of removal (See page BR–51).

HINT:

- ▲ After installation, fill brake reservoir with brake fluid and bleed brake system (See page BR–4).
- ▲ Check for leaks.

FRONT SPEED SENSOR

COMPONENTS

BR0A2–02

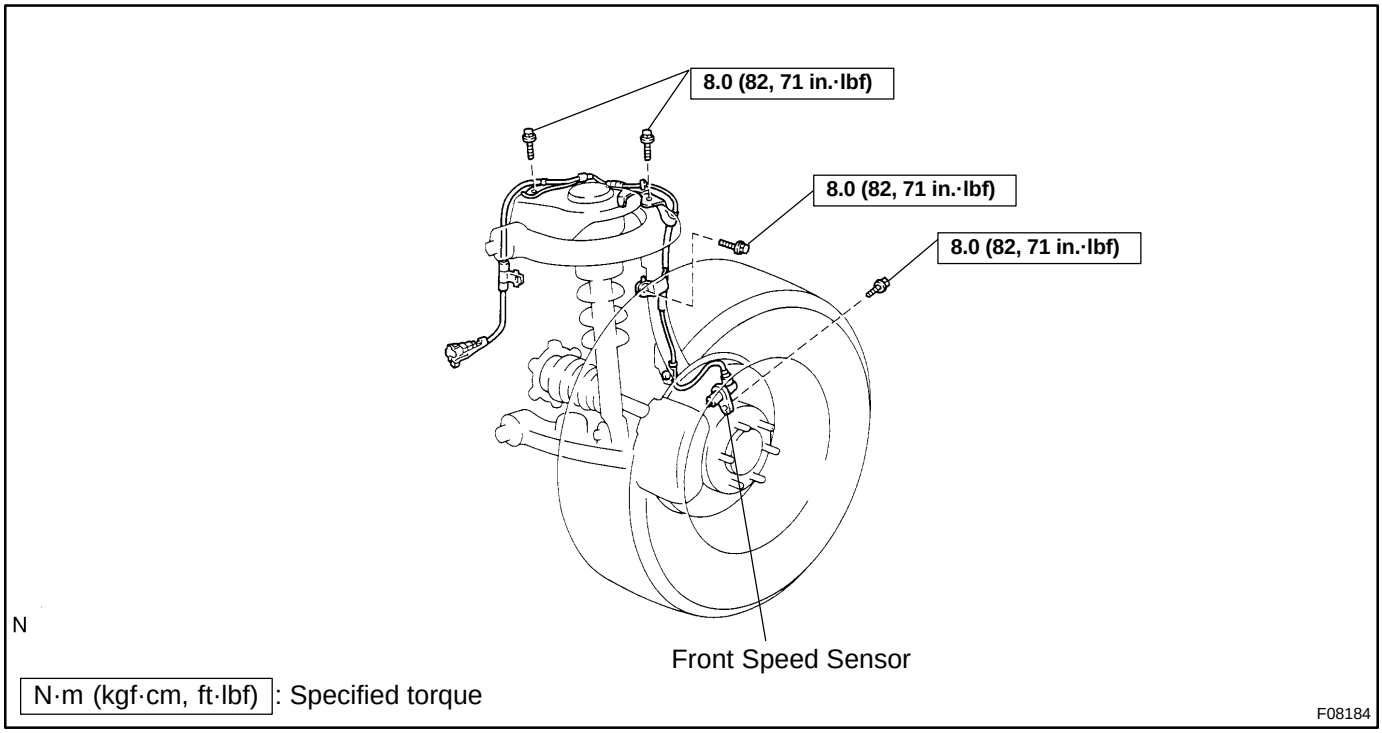

BR0A3–02

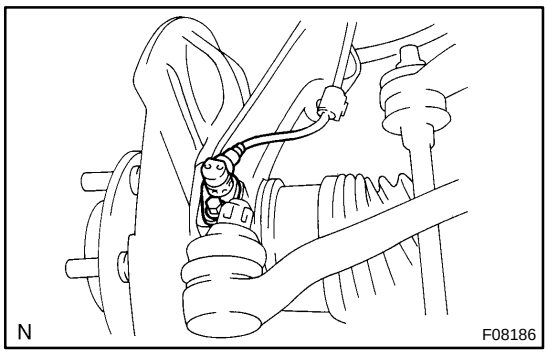

REMOVAL

1. REMOVE FRONT WHEEL

Torque: 113 N·m (1,150 kgf·cm, 83 ft·lbf)

2. DISCONNECT SPEED SENSOR CONNECTOR

3. REMOVE SPEED SENSOR

(a) Remove the clips and 3 clamp bolts holding the sensor harness from the frame, upper arm and steering knuckle.

Torque: 8.0 N·m (82 kgf·cm, 71 in.·lbf)

(b) Remove the bolt and speed sensor from the steering knuckle.

Torque: 8.0 N·m (82 kgf·cm, 71 in.·lbf)

BR0A4–02

INSTALLATION

Installation is in the reverse order of removal (See page BR–56).

HINT:

After installation, check speed sensor signal (See page DI–448).

REAR SPEED SENSOR

COMPONENTS

BR0A5–02

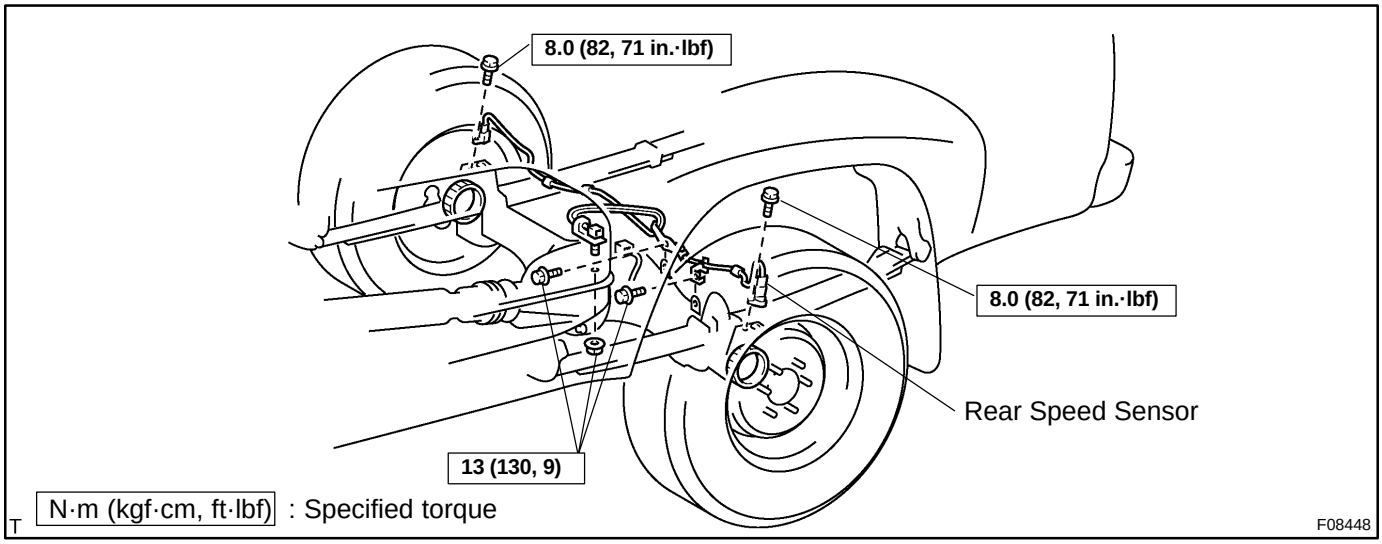

BR0A6–02

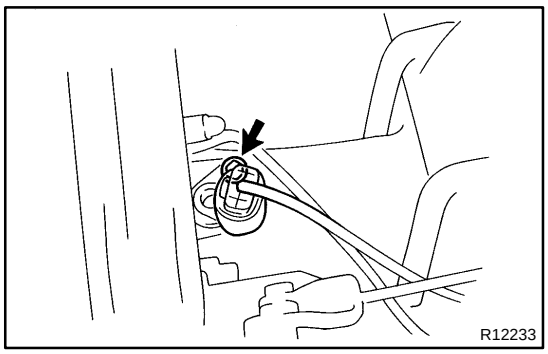

REMOVAL

1. DISCONNECT SPEED SENSOR CONNECTOR

2. REMOVE SPEED SENSOR

(a) Remove the 2 clamp bolts, clamp nut and 5 resin clips holding the sensor wire harness from the axle and the fuel tank.

Torque: 13 N·m (130 kgf·cm, 9 ft·lbf)

HINT:

▲ When installing the rear sensor wire harness, never use the removed resin clips, which are service parts.

▲ When replacing clips, set up new resin clips at the same angle of the removed resin clips.

(b) Remove the bolt and speed sensor from the axle carrier.

Torque: 8.0 N·m (82 kgf·cm, 71 in.·lbf)

BR0A7–02

INSTALLATION

Installation is in the reverse order of removal (See page BR–59).

HINT:

After installation, check speed sensor signal (See page DI–448).

CH0J6–02

ON–VEHICLE INSPECTION

CAUTION:

- **Check that the battery cables are connected to the correct terminals.**
- **Disconnect the battery cables when the battery is given a quick charge.**
- **Do not perform tests with a high voltage insulation resistance tester.**
- **Never disconnect the battery while the engine is running.**

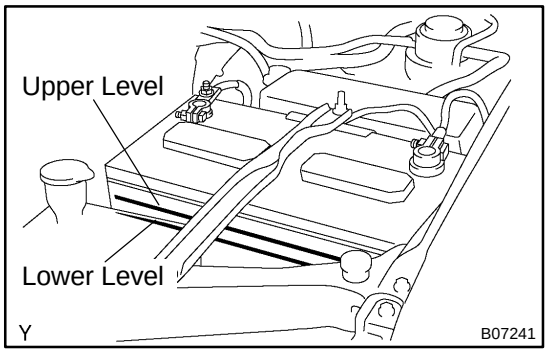

1. CHECK BATTERY ELECTROLYTE LEVEL

Check the electrolyte quantity of each cell.

Maintenance–Free Battery:

If under the lower level, replace the battery (or add distilled water if possible) and check the charging system.

Except Maintenance–Free Battery:

If under the lower level, add distilled water.

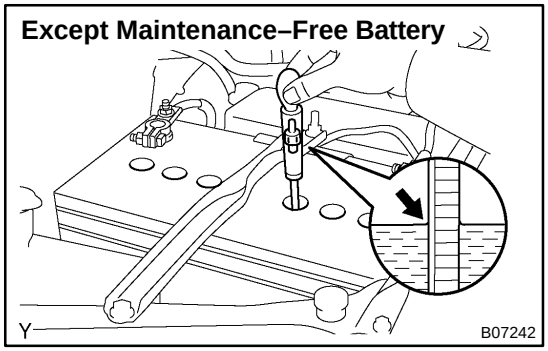

2. Except Maintenance–Free Battery: CHECK BATTERY SPECIFIC GRAVITY

Check the specific gravity of each cell.

Standard specific gravity: 1.25 – 1.29 at 20˚C (68˚F)

If the specific gravity is less than specification, charge the battery.

3. Maintenance–Free Battery: CHECK BATTERY VOLTAGE

(a) After having driven the vehicle and in the case that 20 minutes have not passed after having stopped the engine, turn the ignition switch ON and turn on the electrical system (headlight, blower motor, rear defogger etc.) for 60 seconds to remove the surface charge.

(b) Turn the ignition switch OFF and turn off the electrical systems.

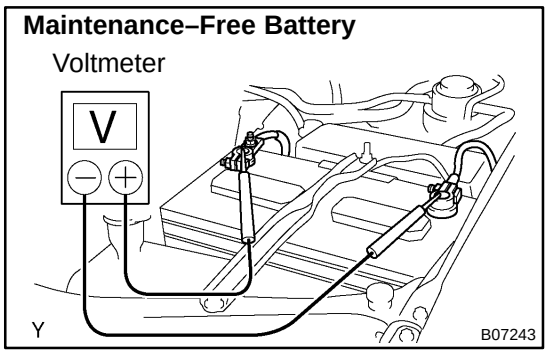

(c) Measure the battery voltage between the negative (–) and positive (+) terminals of the battery.
Standard voltage: 12.5 – 12.9 V at 20˚C (68˚F)

If the voltage is less than specification, charge the battery.

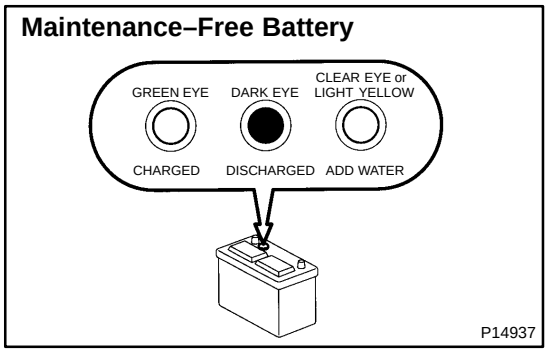

HINT:
Check the indicator as shown in the illustration.

4. CHECK BATTERY TERMINALS, FUSIBLE LINK AND FUSES

(a) Check that the battery terminals are not loose or corroded.

(b) Check the fusible link and fuses for continuity.

5. INSPECT DRIVE BELT

HINT:
A belt tensioner is used, so checking the belt tension is not necessary.

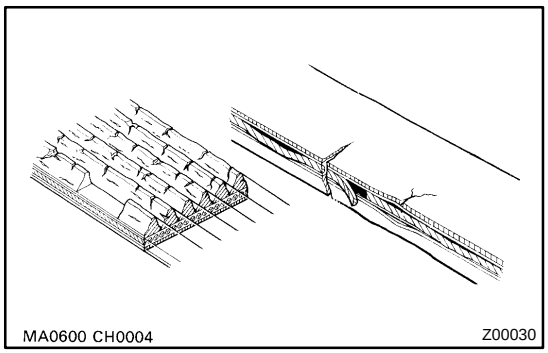

(a) Visually check the drive belt for excessive wear, frayed cords etc.

If necessary, replace the drive belt.

HINT:

- ▲ Cracks on the rib side of a drive belt are considered acceptable. If the drive belt has chunks missing from the ribs, it should be replaced.
- ▲ The drive belt tension can be released by turning the belt tensioner counterclockwise. The pulley bolt for the belt tensioner has a left–hand thread.

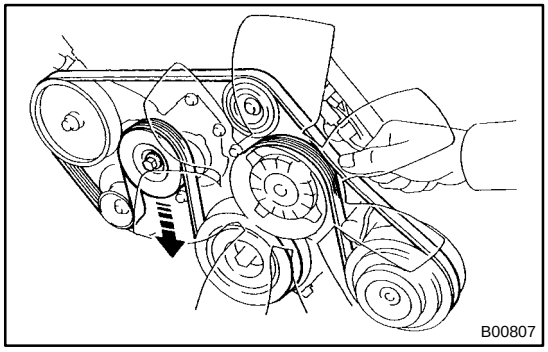

(b) Check the belt tensioner operation.

- ▲ Check that the belt tensioner moves downward when the drive belt is pressed down at the points indicated in the illustration with approx. 98 N (10 kgf, 22.0 lbf) of force.
- ▲ Check the alignment of the belt tensioner pulley to make sure the drive belt has not slipped off the pulley.

If necessary, replace the belt tensioner.

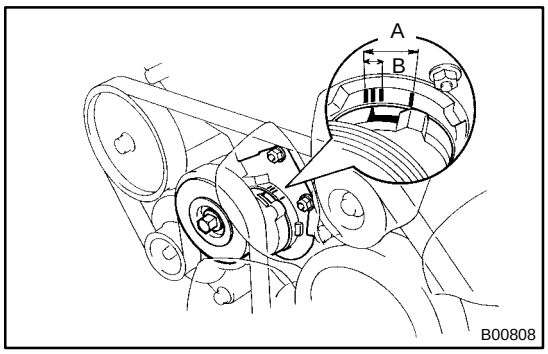

▲ Check that the arrow mark on the belt tensioner falls within area A of the scale.

If it is outside area A, replace the drive belt.

HINT:

▲ When a new belt is installed, it should lie within area B. If not, the drive belt is not correct.

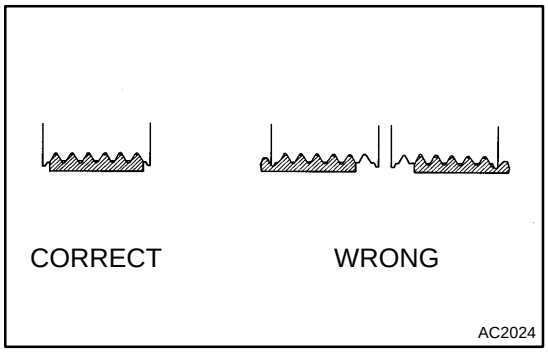

▲ After installing a belt, check that it fits properly in the ribbed grooves.

▲ Check by hand to confirm that the belt has not slipped out of the groove on the bottom of the pulley.

6. REMOVE ENGINE UNDER COVER

7. VISUALLY CHECK GENERATOR WIRING AND LISTEN FOR ABNORMAL NOISES

(a) Check that the wiring is in good condition.

(b) Check that there is no abnormal noise from the generator while the engine is running.

8. CHECK CHARGE WARNING LIGHT CIRCUIT

(a) Warm up the engine and then turn it off.

(b) Switch off all accessories.

(c) Turn the ignition switch ON, and check that the charge warning light is lit.

(d) Start the engine, and check that the light goes off.

If the light does not go off as specified, troubleshoot the charge light circuit.

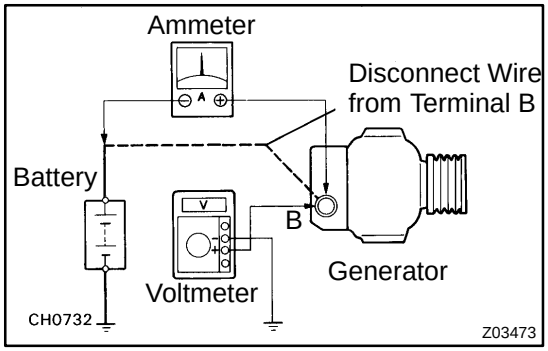

9. INSPECT CHARGING CIRCUIT WITHOUT LOAD

HINT:

If a battery/generator tester is available, connect the tester to the charging circuit as per manufacturer's instructions.

(a) If a tester is not available, connect a voltmeter and ammeter to the charging circuit as follows:

▲ Disconnect the wire from terminal B of the generator, and connect it to the negative (–) tester probe of the ammeter.

▲ Connect the positive (+) tester probe of the ammeter to terminal B of the generator.

▲ Connect the positive (+) tester probe of the voltmeter to terminal B of the generator.

▲ Ground the negative (–) tester probe of the voltmeter.

(b) Check the charging circuit as follows:

With the engine running from idling to 2,000 rpm, check the reading on the ammeter and voltmeter.

Standard amperage: 10 A or less

Standard voltage: 13.2 – 14.8 V

If the voltmeter reading is more than standard voltage, replace the voltage regulator.

If the voltmeter reading is less than standard voltage, check the voltage regulator and generator.

10. INSPECT CHARGING CIRCUIT WITH LOAD

(a) With the engine running at 2,000 rpm, turn on the high beam headlights and place the heater blower switch at HI.

(b) Check the reading on the ammeter.

Standard amperage: 30 A or more

If the ammeter reading is less than the standard amperage, repair the generator.

HINT:

If the battery is fully charged, the indication will sometimes be less than standard amperage.

11. REINSTALL ENGINE UNDER COVER

GENERATOR (Standard Spec.)

COMPONENTS

CH0LL–01

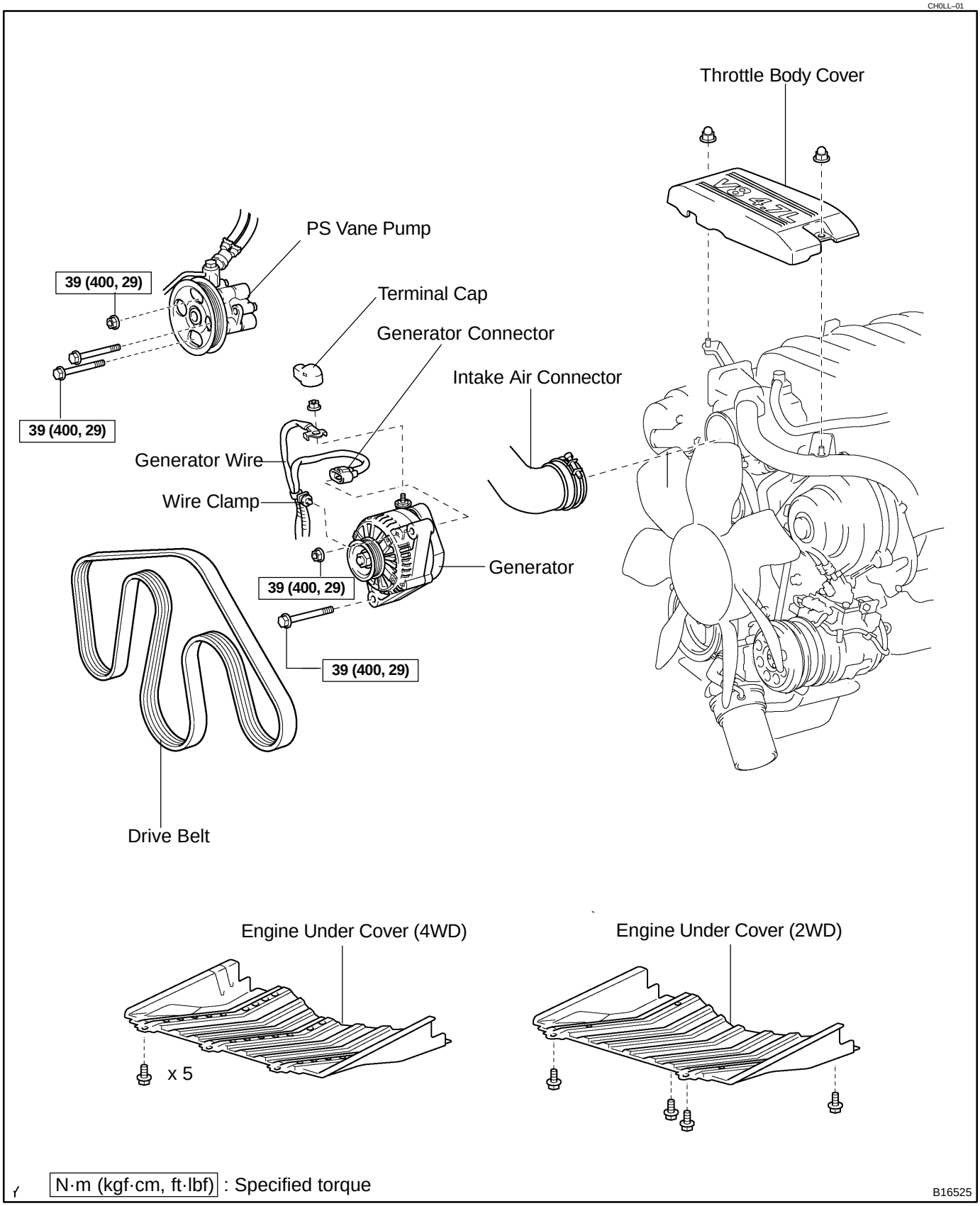

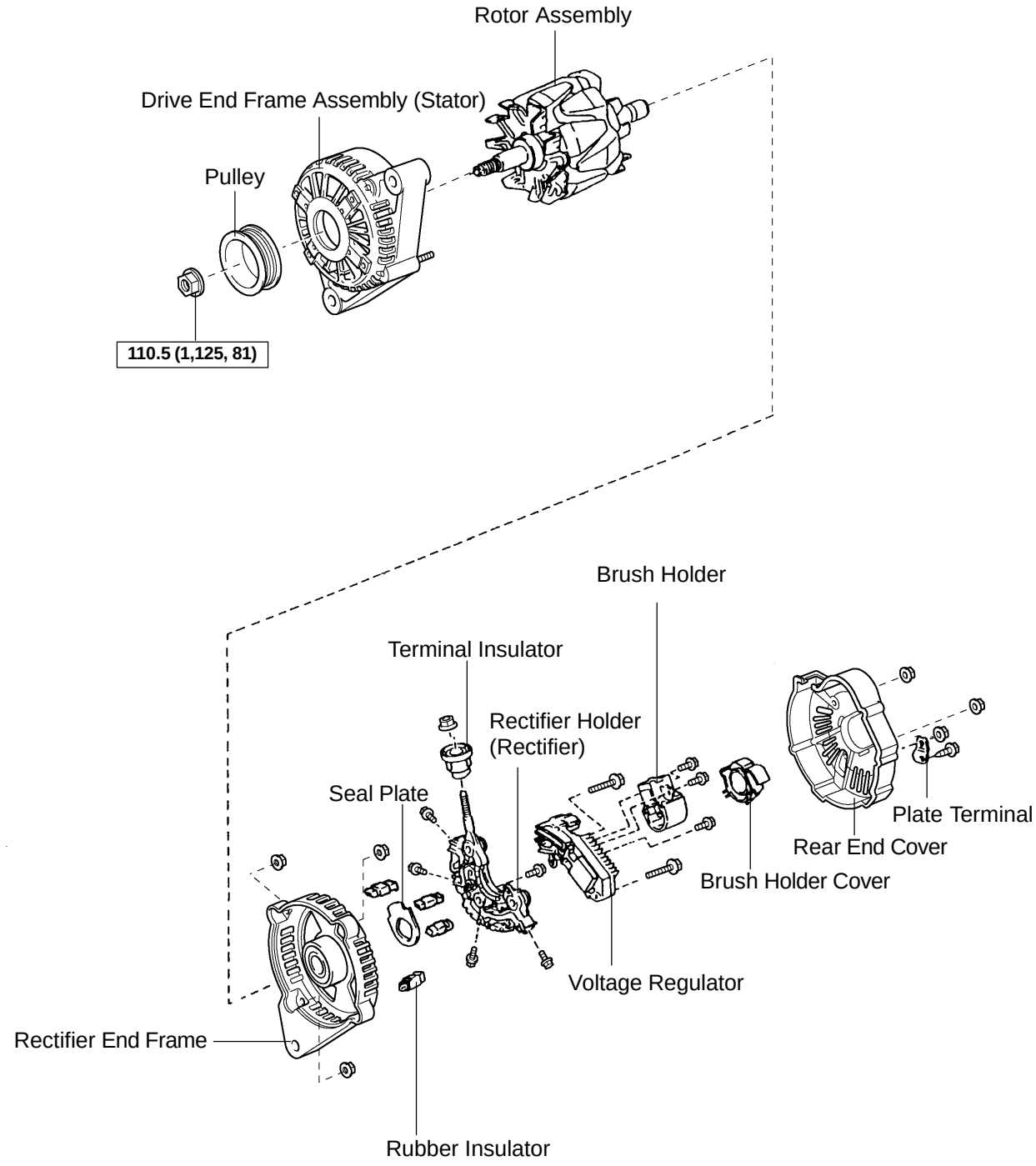
Rotor Assembly
Drive End Frame Assembly (Stator)
Pulley
110.5 (1,125, 81)
Brush Holder
Terminal Insulator
Rectifier Holder
(Rectifier)
Seal Plate
Plate Terminal
Rear End Cover
Brush Holder Cover
Voltage Regulator
Rectifier End Frame
Rubber Insulator
N·m (kgf·cm, ft·lbf): Specified torque
▲ Non–reusable part
Y
B16590

CH0LM–01

REMOVAL

1. REMOVE ENGINE UNDER COVER
2. REMOVE THROTTLE BODY COVER
3. DISCONNECT INTAKE AIR CONNECTOR FROM THROTTLE BODY

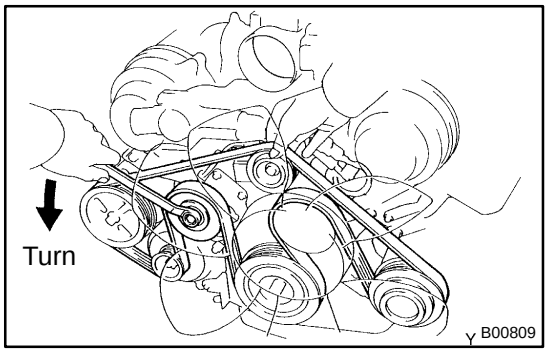

4. REMOVE GENERATOR DRIVE BELT

Loosen the belt tension by turning the belt tensioner counterclockwise, and remove the drive belt.

HINT:

The pulley bolt for the belt tensioner has a left hand thread.

5. REMOVE PS VANE PUMP FROM ENGINE (See page SR–43)
6. REMOVE GENERATOR

(a) Disconnect the generator connector.
(b) Remove the terminal cap and nut, and disconnect the generator wire.
(c) Disconnect the wire clamp from the cord clip on the generator.
(d) Remove the bolt, nut and generator.

CH0LN–01

DISASSEMBLY

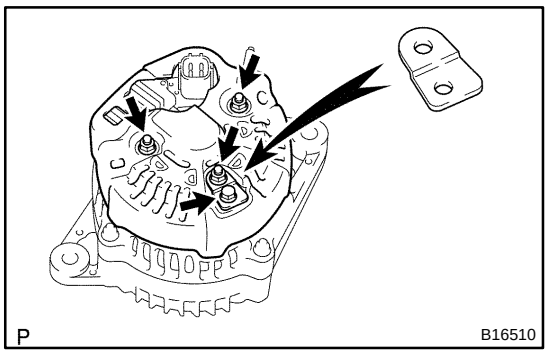

1. REMOVE REAR END COVER

(a) Remove the nut and terminal insulator.
(b) Remove the bolt 3 nuts, plate terminal and end cover.
(c) Remove the brush holder cover from the brush holder.

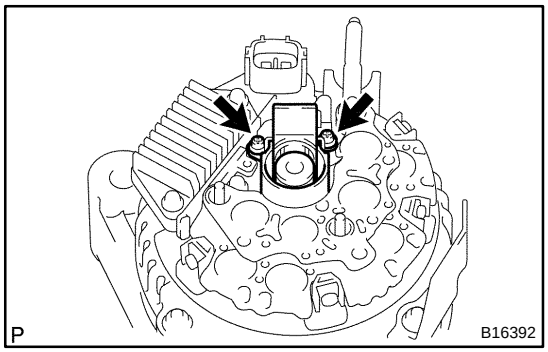

2. REMOVE BRUSH HOLDER

(a) Remove the 2 screws and brush holder.
(b) Remove the seal plate from the rectifier end frame.

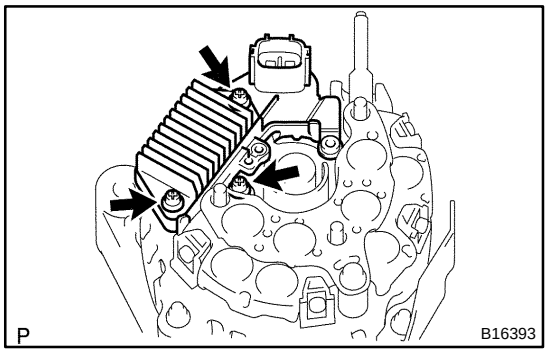

3. REMOVE VOLTAGE REGULATOR AND RECTIFIER HOLDER

(a) Remove the 3 screws and voltage regulator.

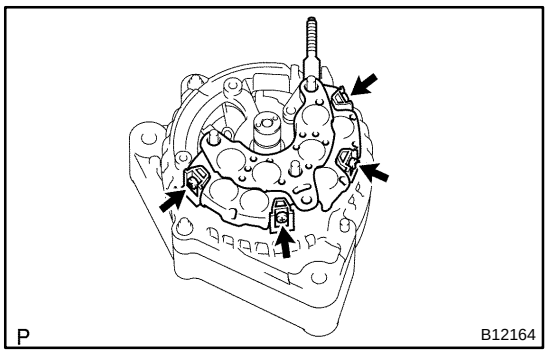

(b) Remove the 4 screws and rectifier holder.
(c) Remove the 4 rubber insulators.

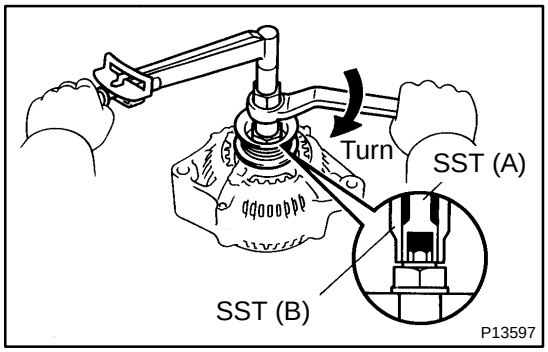

4. REMOVE PULLEY

(a) Hold SST (A) with a torque wrench, and tighten SST (B) clockwise to the specified torque.
SST 09820–63011
Torque: 39 N·m (400 kgf·cm, 29 ft·lbf)
(b) Check that SST (A) is secured to the rotor shaft.

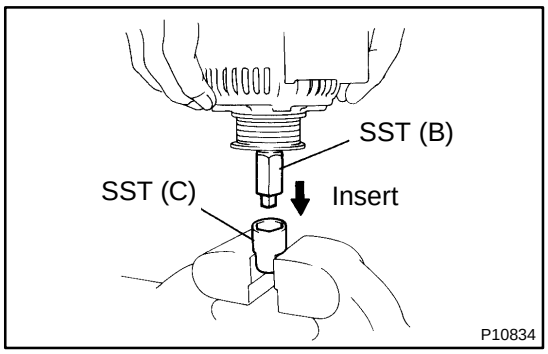

(c) Mount SST (C) in a vise.
(d) Insert SST (B) into SST (C), and attach the pulley nut to SST (C).

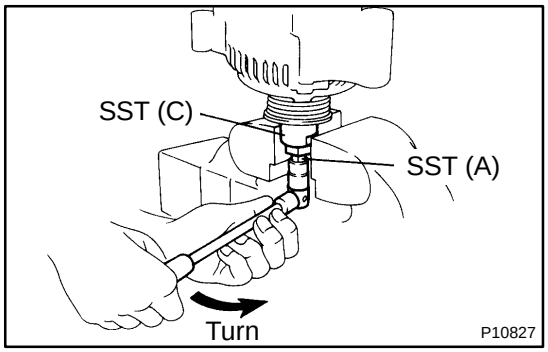

(e) To loosen the pulley nut, turn SST (A) in the direction shown in the illustration.

NOTICE:
To prevent damage to the rotor shaft, do not loosen the pulley nut more than one–half of a turn.

(f) Remove the generator from SST (C).

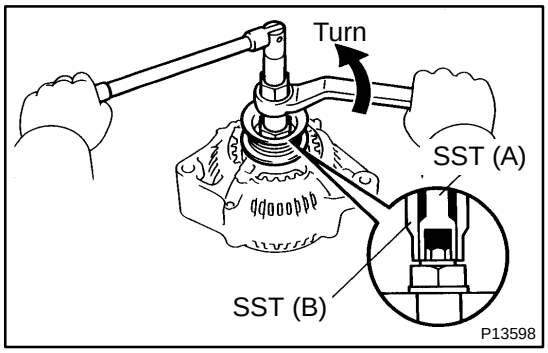

(g) Turn SST (B), and remove SST (A and B).
(h) Remove the pulley nut and pulley.

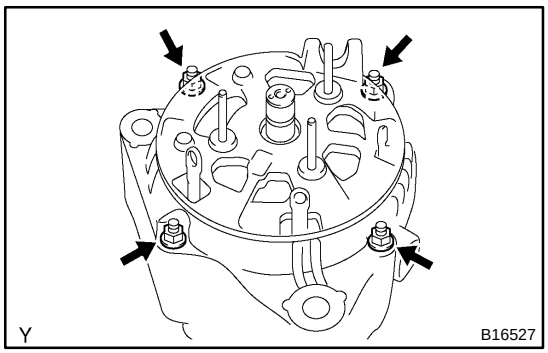

5. REMOVE RECTIFIER END FRAME

(a) Remove the 4 nuts.

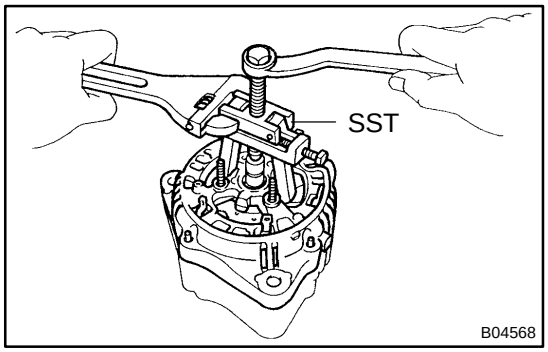

(b) Using SST, remove the rectifier end frame.
SST 09286–46011

(c) Remove the generator washer from the rectifier end frame.

6. REMOVE ROTOR FROM DRIVE END FRAME

CH0LO–01

INSPECTION

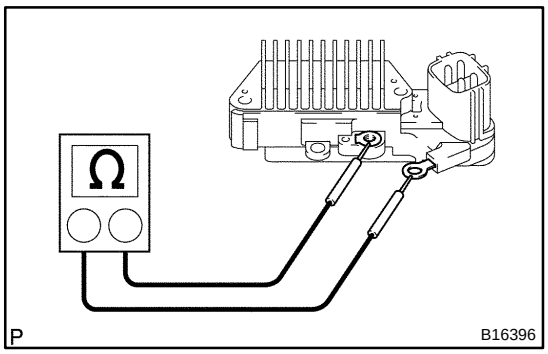

1. INSPECT VOLTAGE REGULATOR

(a) Using an ohmmeter, check the continuity between terminals F and B.

Standard:

When the positive and negative poles between terminals F and B are exchanged, there is continuity in one way but no continuity in another way.

If the continuity is not as specified, replace the regulator.

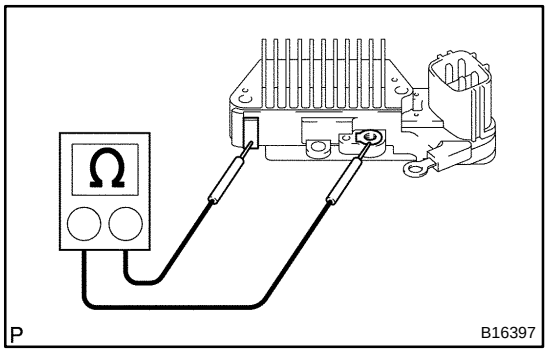

(b) Using an ohmmeter, check the continuity between terminals F and E.

Standard:

When the positive and negative poles between terminals F and E are exchanged, there is continuity in one way but no continuity in another way.

If the continuity is not as specified, replace the regulator.

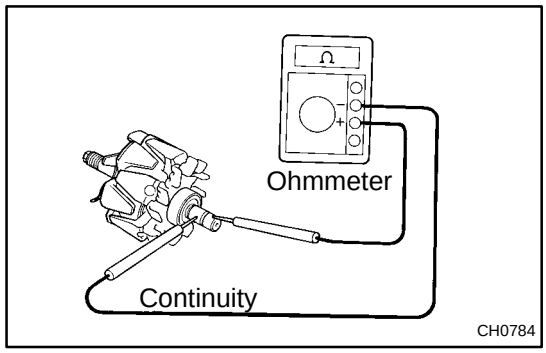

2. INSPECT ROTOR FOR OPEN CIRCUIT

(a) Check the rotor for open circuit.

Using an ohmmeter, check that there is continuity between the slip rings.

Standard resistance: 2.1 – 2.5 Ω at 20˚C (68˚F)

If there is no continuity, replace the rotor.

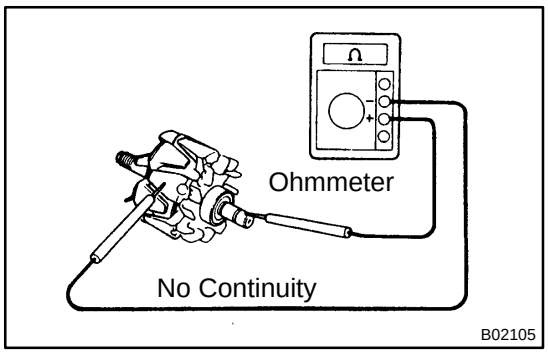

(b) Check the rotor for ground.

Using an ohmmeter, check that there is no continuity between the slip ring and rotor.

If there is continuity, replace the rotor.

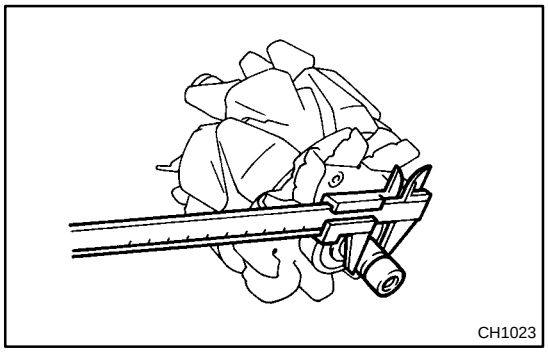

(c) Check that the slip rings are not rough or scored.

If rough or scored, replace the rotor.

(d) Using vernier calipers, measure the slip ring diameters.

Standard diameter: 14.2 – 14.4 mm (0.559 – 0.567 in.)

Minimum diameter: 12.8 mm (0.504 in.)

If the diameter is less than minimum, replace the rotor.

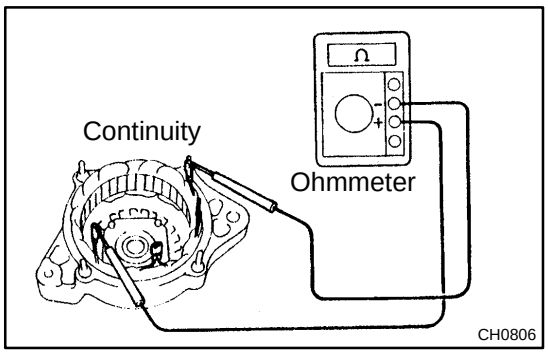

3. INSPECT STATOR FOR OPEN CIRCUIT

(a) Check the stator for open circuit.
Using an ohmmeter, check that there is continuity between the coil leads.

If there is no continuity, replace the drive end frame assembly.

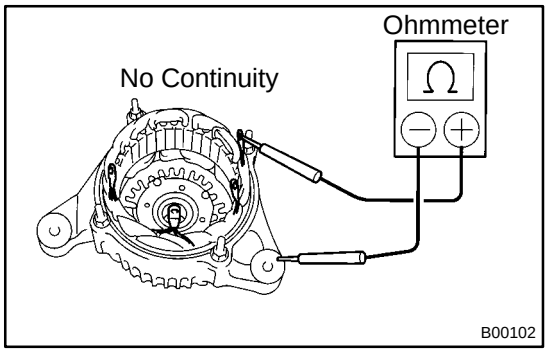

(b) Check the stator for ground.
Using an ohmmeter, check that there is no continuity between the coil lead and drive end frame.

If there is continuity, replace the drive end frame assembly.

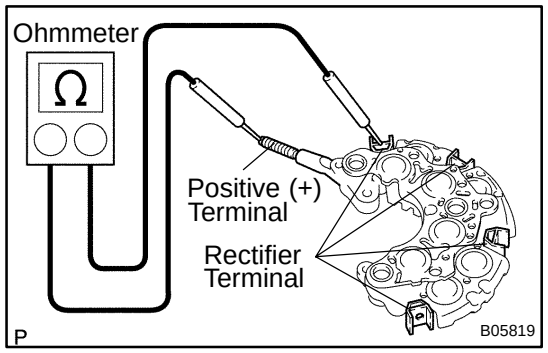

4. INSPECT POSITIVE RECTIFIER

(a) Check the positive (+) rectifire.
(1) Using an ohmmeter, connect one tester probe to the positive (+) terminal and the other to each rectifier terminal.
(2) Reverse the polarity of the tester probes and repeat step (a).
(3) Check that one shows continuity and the other shows no continuity.

If continuity is not as specified, replace the rectifier holder.

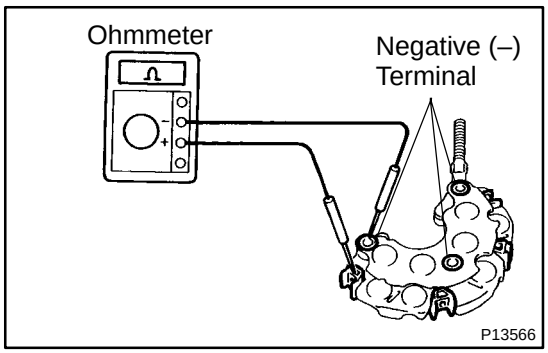

(b) Check the negative (–) rectifire.
(1) Using an ohmmeter, connect one tester probe to each negative (–) terminal and the other to each rectifier terminal.
(2) Reverse the polarity of the tester probes and repeat step (a).
(3) Check that one shows continuity and the other shows no continuity.

If continuity is not as specified, replace the rectifier holder.

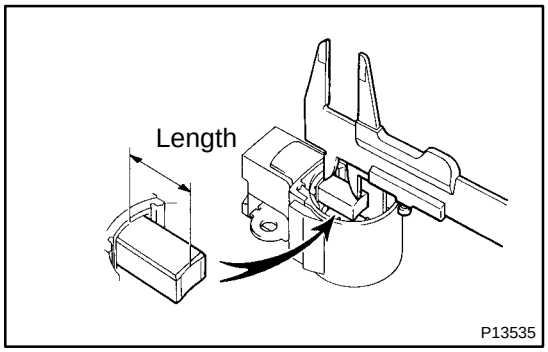

5. INSPECT EXPOSED BRUSH LENGTH

Using vernier calipers, measure the exposed brush length.

Standard exposed length:
9.5 – 11.5 mm (0.374 – 0.453 in.)
Minimum exposed length: 1.5 mm (0.059 in.)

If the exposed length is less than minimum, replace the brush holder assembly.

6. INSPECT BEARING

Check that the bearing is not rough or worn.

If necessary, replace the drive end frame assembly (front bearing) or rotor assembly (rear bearing).

CH0LP–01

REASSEMBLY

1. PLACE RECTIFIER END FRAME ON PULLEY

2. INSTALL ROTOR TO DRIVE END FRAME

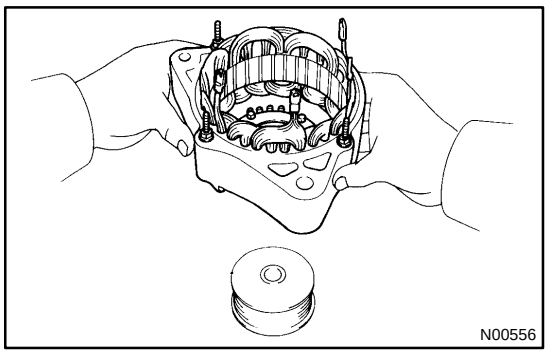

3. INSTALL RECTIFIER END FRAME

(a) Place the generator washer on the rotor.

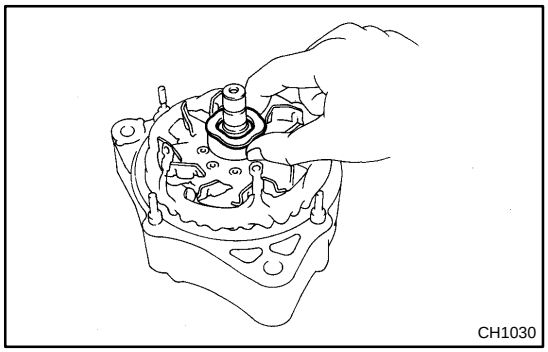

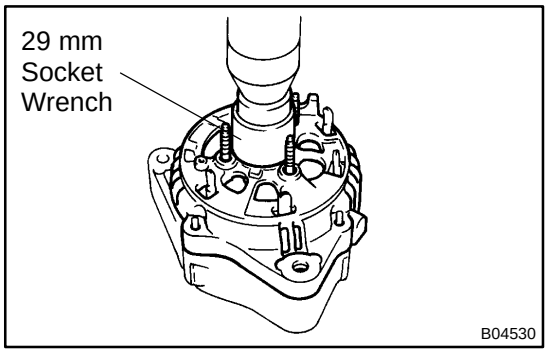

(b) Using a 29 mm socket wrench and press, slowly press in the rectifier end frame.

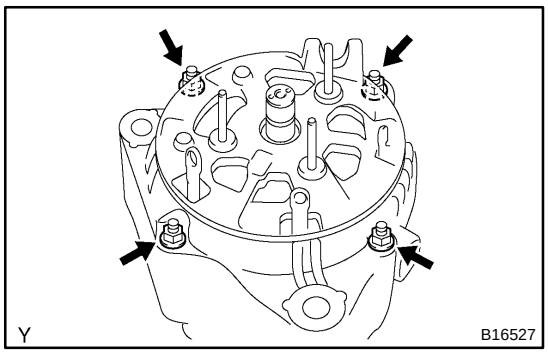

(c) Install the 4 nuts.
Torque: 4.5 N·m (46 kgf·cm, 39 in.·lbf)

4. INSTALL PULLEY

(a) Install the pulley to the rotor shaft by tightening the pulley nut by hand.

(b) Hold SST (A) with a torque wrench, and tighten SST (B) clockwise to the specified torque.
SST 09820–63011
Torque: 39 N·m (400 kgf·cm, 29 ft·lbf)

(c) Check that SST (A) is secured to the pulley shaft.

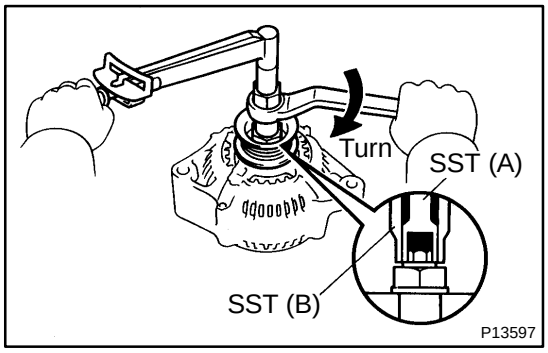

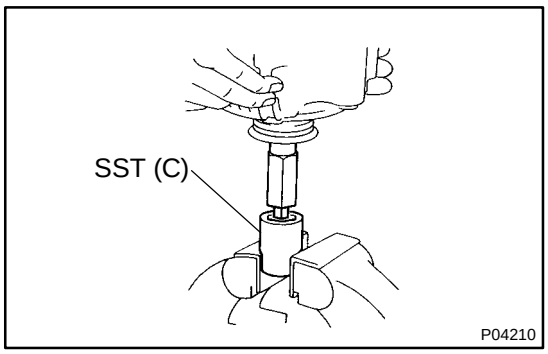

(d) Mount SST (C) in a vise.
(e) Insert SST (B) into SST (C), and attach the pulley nut to SST (C).

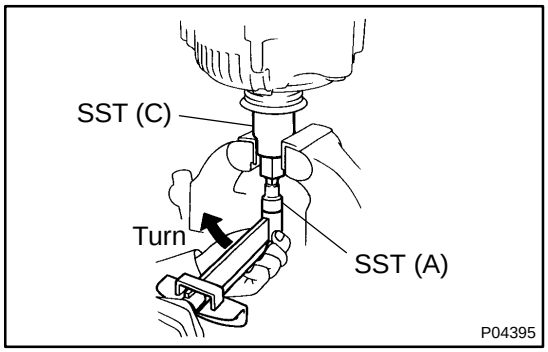

(f) To torque the pulley nut, turn SST (A) in the direction shown in the illustration.
Torque: 110.5 N·m (1,125 kgf·cm, 81 ft·lbf)
(g) Remove the generator from SST (C).

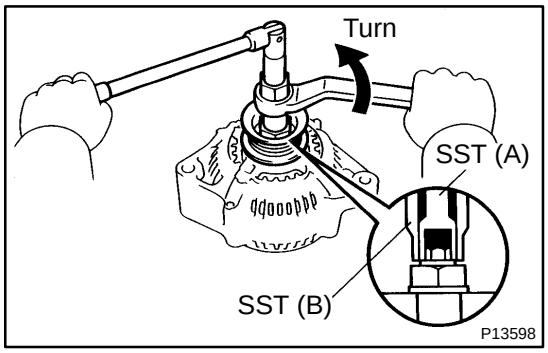

(h) Turn SST (B), and remove SST (A and B).

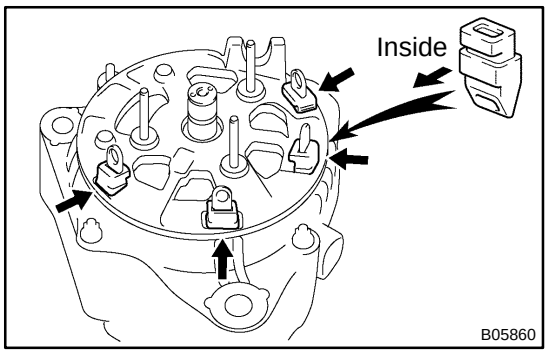

5. INSTALL RECTIFIER HOLDER
(a) Install the 4 rubber insulators on the lead wires.
NOTICE:
Be careful of the rubber insulators installation direction.

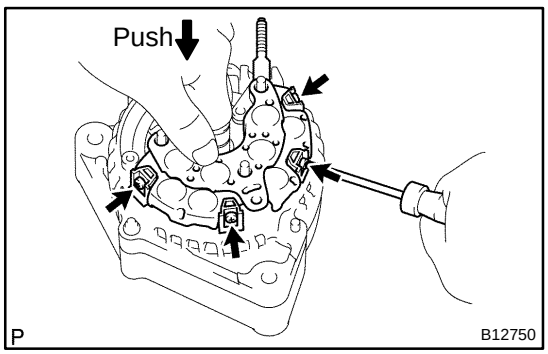

(b) Install the rectifier while pushing it with the 4 screws.
Torque: 1.96 N·m (20 kgf·cm, 17 in.·lbf)

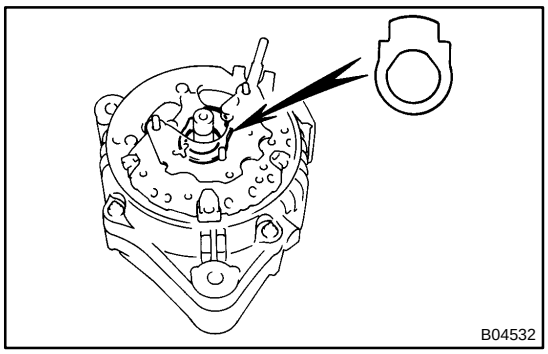

6. INSTALL BRUSH HOLDER AND VOLTAGE REGULATOR

(a) Place the seal plate on the rectifier end frame.

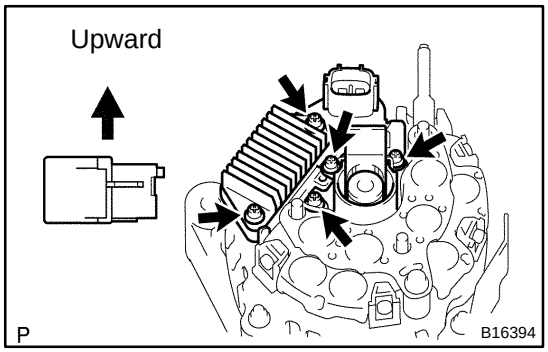

(b) Place the voltage regulator and brush holder on the rectifier end frame.

NOTICE:

Be careful of the brush holder installation direction.

(c) Install the 5 screws.

Torque: 1.96 N·m (20 kgf·cm, 17 in.·lbf)

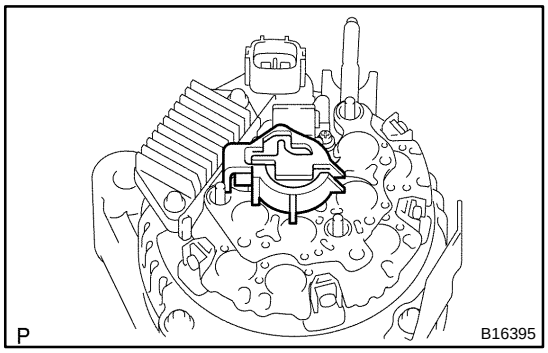

7. INSTALL REAR END COVER

(a) Place the brush holder cover on the brush holder.

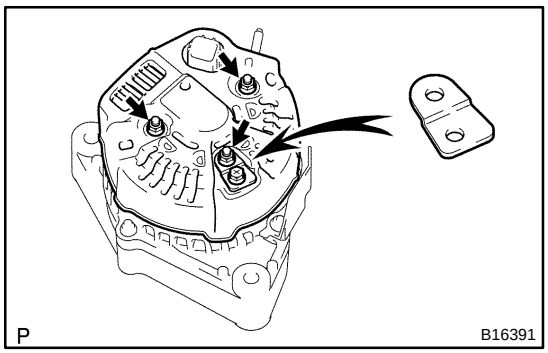

(b) Install the end cover and plate terminal with the bolt and 3 nuts.

Torque:

Bolt: 3.85 N·m (39 kgf·cm, 34 in.·lbf)

Nut: 4.4 N·m (46 kgf·cm, 39 in.·lbf)

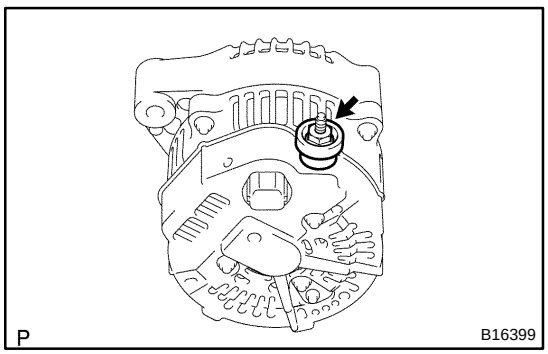

(c) Install the terminal insulator with the nut.

Torque: 4.1 N·m (41.5 kgf·cm, 36 in.·lbf)

8. CHECK THAT ROTOR ROTATES SMOOTHLY

CH0LQ–01

INSTALLATION

1. INSTALL GENERATOR

(a) Install the generator with the bolt and nut.
Torque: 39 N·m (400 kgf·cm, 29 ft·lbf)

(b) Connect the generator connector.

(c) Connect the generator wire with the nut and rubber.

(d) Install the terminal cap.

(e) Install the wire clamp to the cord clip on the generator.

2. INSTALL PS VANE PUMP (See page SR–51)

3. INSTALL DRIVE BELT

Install the belt by turning the belt tensioner counterclockwise.

HINT:

The pulley bolt for the belt tensioner has a left–hand thread.

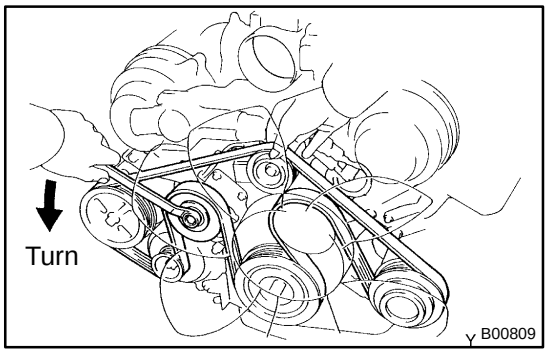

4. CONNECT INTAKE AIR CONNECTOR TO THROTTLE BODY

5. PERFORM ON–VEHICLE INSPECTION (See page CH–1)

6. INSTALL THROTTLE BODY COVER

7. INSTALL ENGINE UNDER COVER

GENERATOR (Towing Package Spec.)

COMPONENTS

CH0LR–01

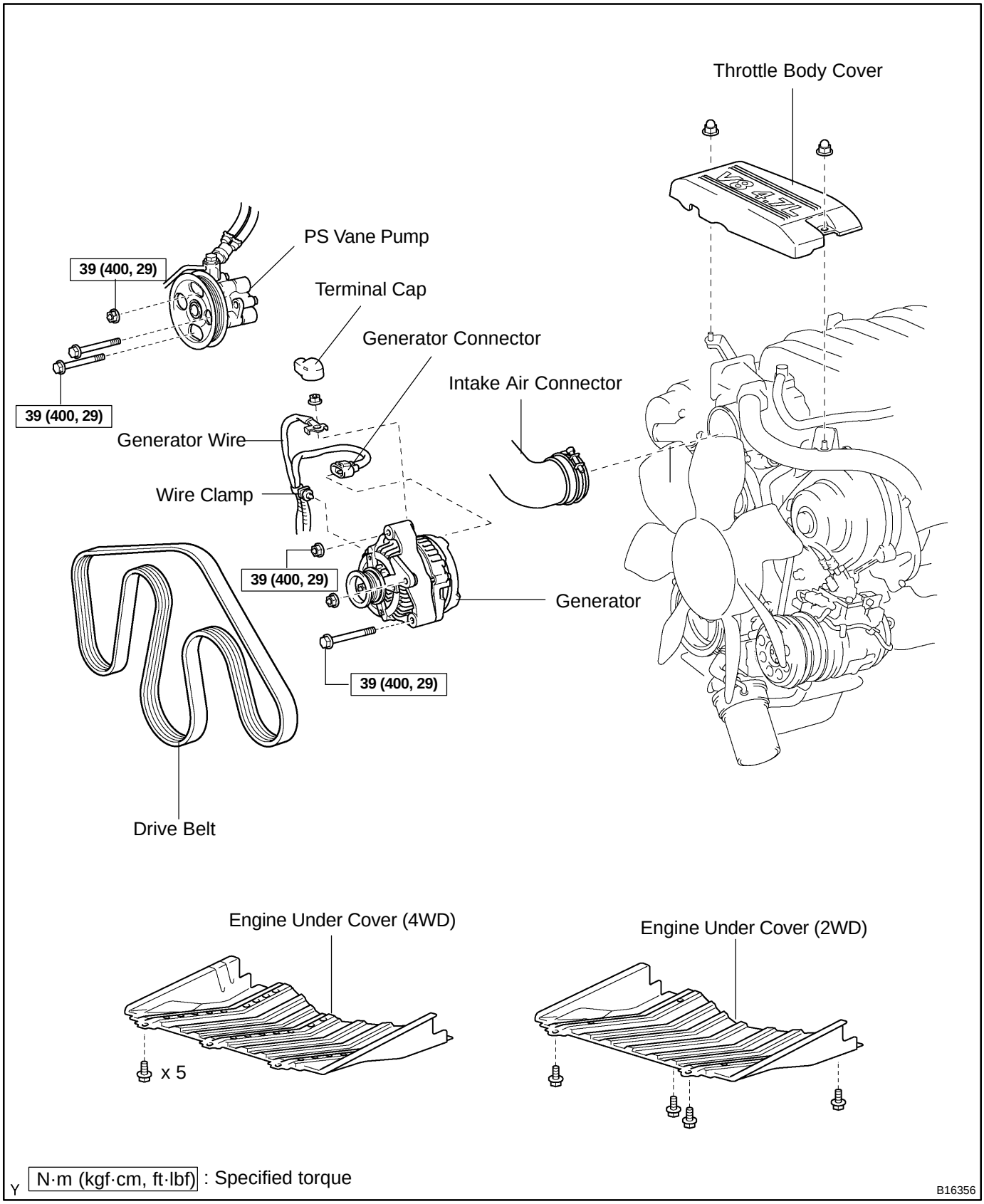

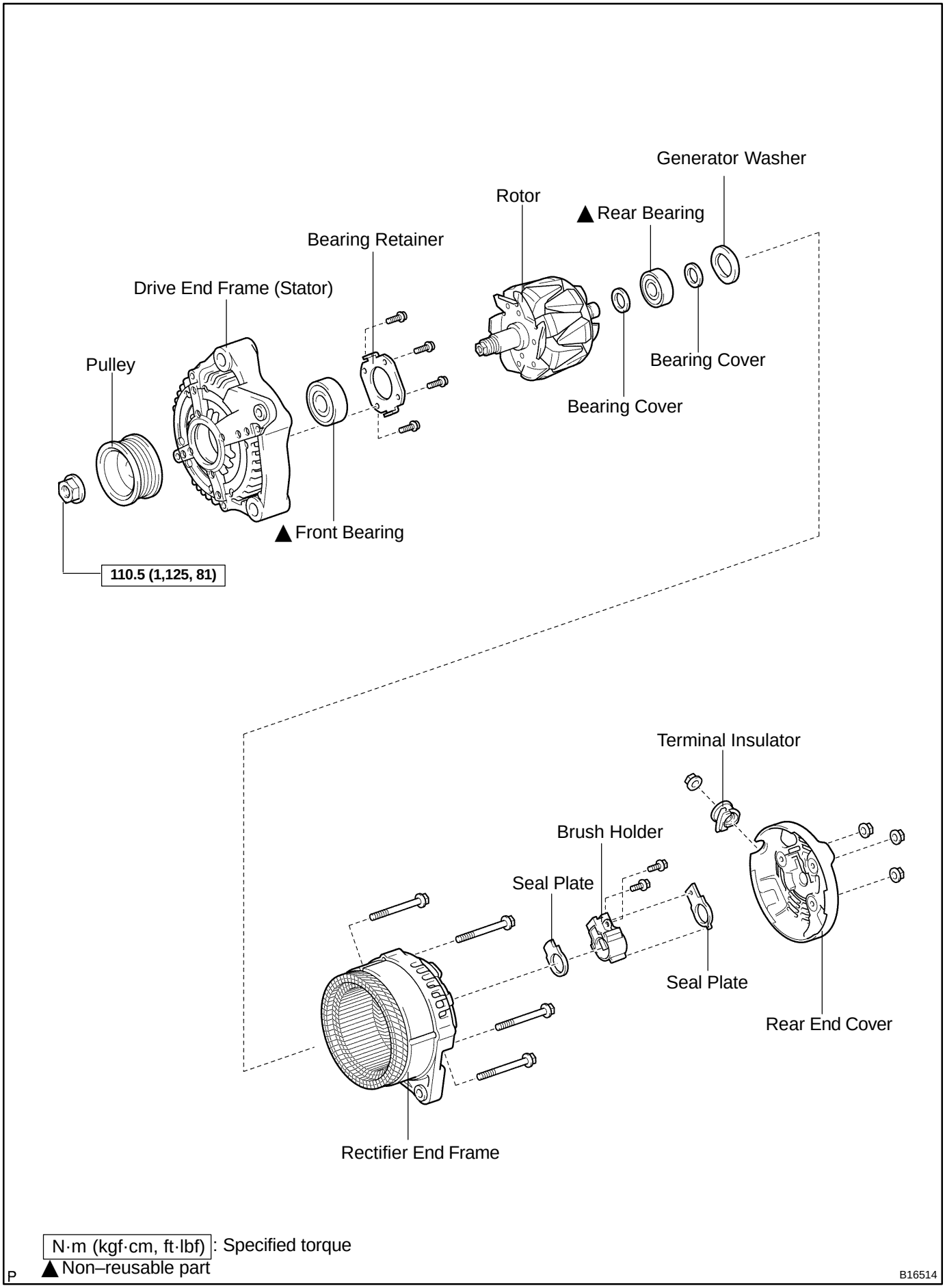
Generator Washer
Rotor
▲Rear Bearing
Bearing Retainer
Drive End Frame (Stator)
Pulley
Bearing Cover
Bearing Cover
▲Front Bearing
110.5 (1,125, 81)
Terminal Insulator
Brush Holder
Seal Plate
Seal Plate
Rear End Cover
Rectifier End Frame
N·m (kgf·cm, ft·lbf): Specified torque
▲Non–reusable part
P
B16514

CH0LS–01

REMOVAL

1. REMOVE ENGINE UNDER COVER
2. REMOVE THROTTLE BODY COVER
3. DISCONNECT INTAKE AIR CONNECTOR FROM THROTTLE BODY

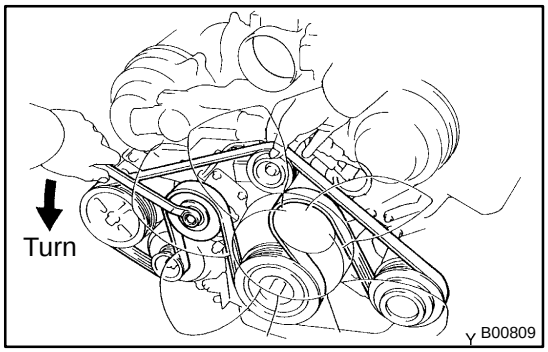

4. REMOVE GENERATOR DRIVE BELT

Loosen the belt tension by turning the belt tensioner counter-clockwise, and remove the drive belt.

HINT:

The pulley bolt for the belt tensioner has a left–hand thread.

5. REMOVE PS VANE PUMP FROM ENGINE (See page SR–43)
6. REMOVE GENERATOR

(a) Disconnect the generator connector.
(b) Remove the terminal cap and nut, and disconnect the generator wire.
(c) Disconnect the wire clamp from the cord clip on the generator.
(d) Remove the bolt, 2 nuts and generator.

CH0LT–01

DISASSEMBLY

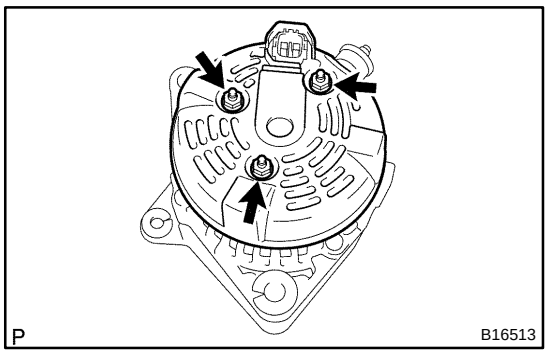

1. REMOVE REAR END COVER

(a) Remove the 3 nuts and end cover.

(b) Remove the terminal insulator.

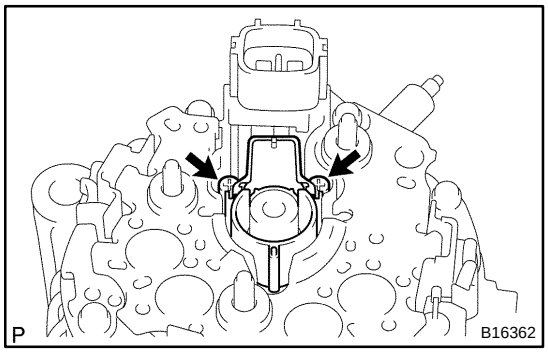

2. REMOVE BRUSH HOLDER

(a) Remove the rear seal plate from the brush holder.

(b) Remove the 2 screws and brush holder.

(c) Remove the front seal plate from the coil assembly.

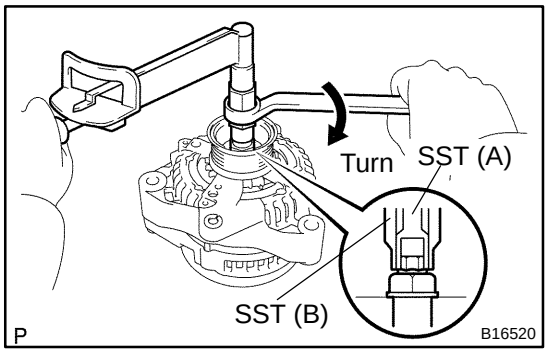

3. REMOVE PULLEY

(a) Hold SST (A) with a torque wrench, and tighten SST (B) clockwise to the specified torque.

SST 09820–63011

Torque: 39 N·m (400 kgf·cm, 29 ft·lbf)

(b) Check that SST (A) is secured to the rotor shaft.

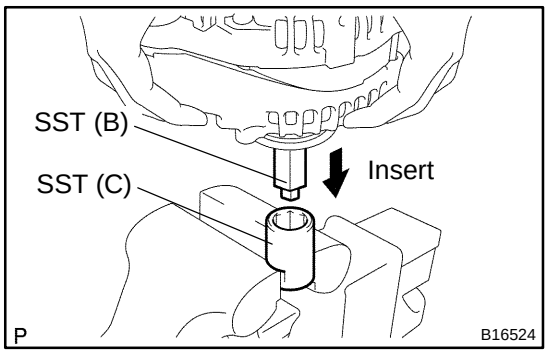

(c) Mount SST (C) in a vise.

(d) Insert SST (B) into SST (C), and attach the pulley nut to SST (C).

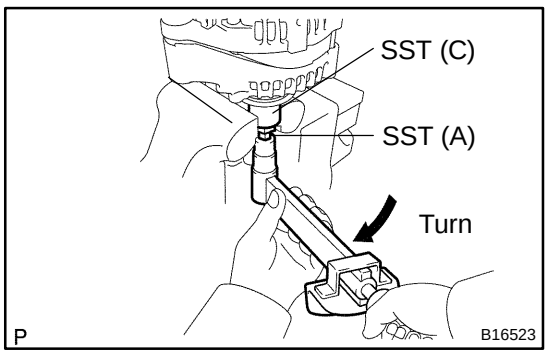

(e) To loosen the pulley nut, turn SST (A) in the direction shown in the illustration.

NOTICE:

To prevent damage to the rotor shaft, do not loosen the pulley nut more than one–half of a turn.

(f) Remove the generator from SST (C).

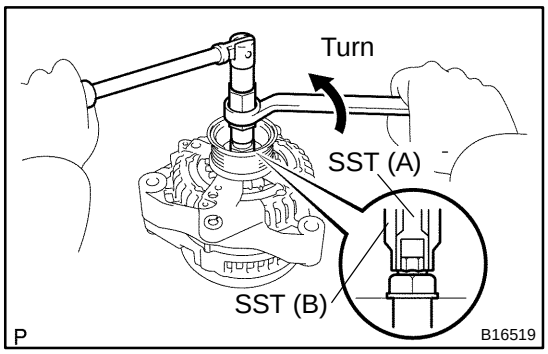

(g) Turn SST (B), and remove SST (A and B).
(h) Remove the pulley nut and pulley.

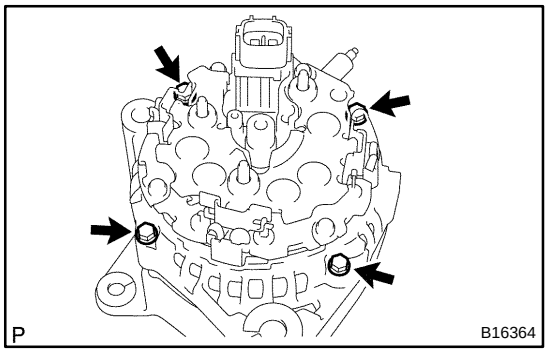

4. REMOVE COIL ASSEMBLY

(a) Remove the 4 bolts.

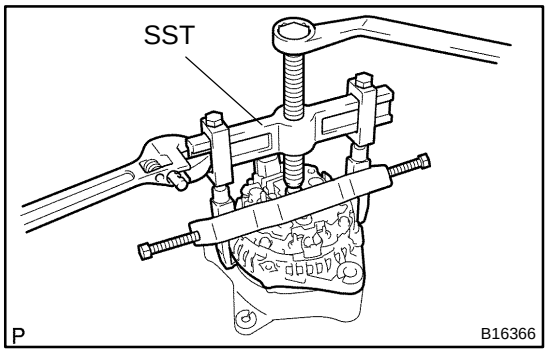

(b) Using SST, remove the coil assembly.
SST 09950–40011 (09951–04020, 09952–04010 09953–04020, 09954–04010, 09955–04071, 09957–04010, 09958–04011)
(c) Remove the generator washer.

5. REMOVE ROTOR FROM DRIVE END FRAME

CH0LU–01

INSPECTION

1. INSPECT ROTOR

(a) Check the rotor for open circuit.
Using an ohmmeter, check that there is continuity between the slip rings.
Standard resistance: 2.3 – 2.7 Ω at 20˚C (68˚F)

If there is no continuity, replace the rotor.

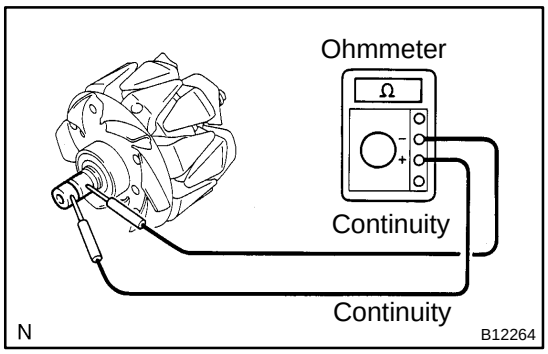

(b) Check the rotor for ground.
Using an ohmmeter, check that there is no continuity between the slip ring and rotor.

If there is continuity, replace the rotor.

(c) Check that the slip rings are not rough or scored.

If rough or scored, replace the rotor.

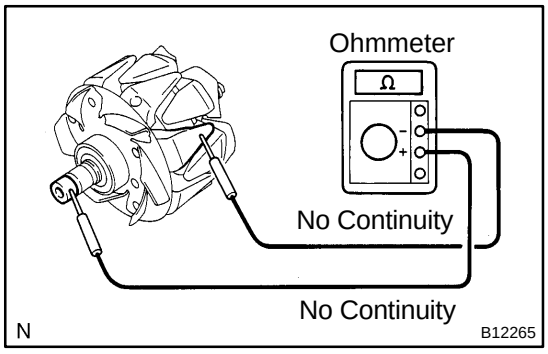

(d) Using vernier calipers, measure the slip ring diameter.
Standard diameter: 14.2 – 14.4 mm (0.559 – 0.567 in.)
Minimum diameter: 14.0 mm (0.551 in.)

If the diameter is less than minimum, replace the rotor.

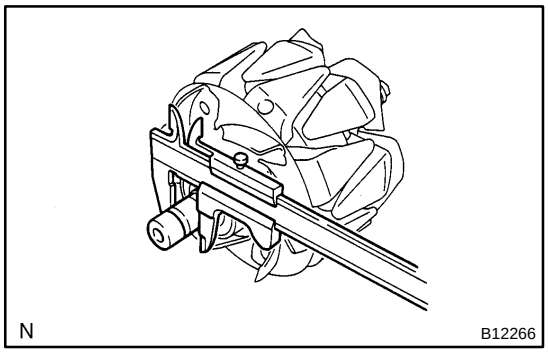

2. INSPECT BRUSHES

Using vernier caliper, measure the exposed brush length.
Standard exposed length: 10.5 mm (0.413 in.)
Minimum exposed length: 4.5 mm (0.177 in.)

If the exposed length is less than minimum, replace the brushes and brush holder assembly.

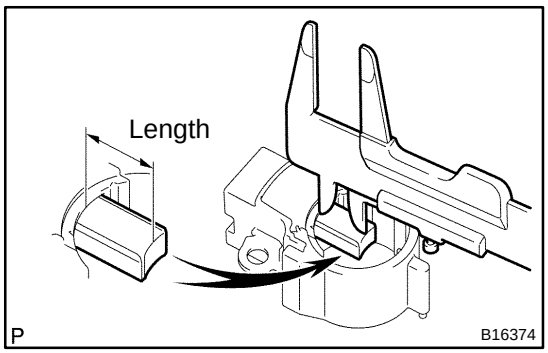

3. INSPECT BEARING

Check the bearing is not rough or worn.

If necessary, replace the bearing (See page CH–23).

CH0LV–01

REPLACEMENT

1. REPLACE FRONT BEARING

(a) Remove the 4 screws, bearing retainer and bearing.

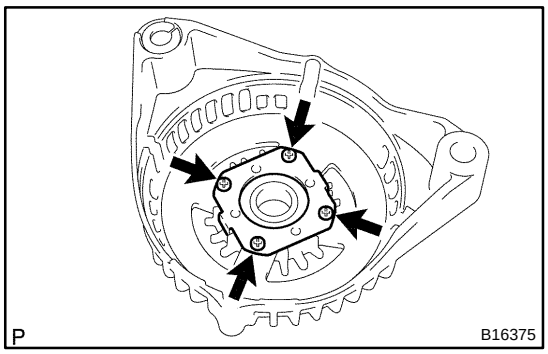

(b) Using SST and a hammer, tap out the bearing.
SST 09950–60010 (09951–00250), 09950–70010 (09951–07100)

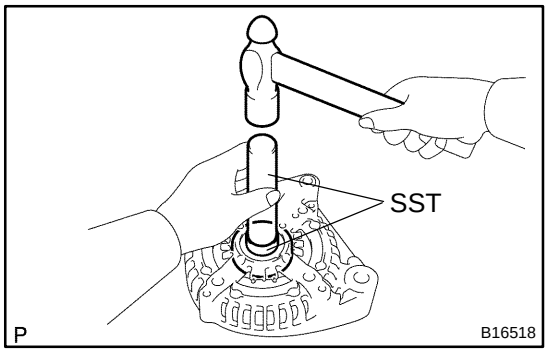

(c) Using SST and a press, press in a new bearing.
SST 09950–60010 (09951–00470), 09950–70010 (09951–07100)

(d) Install the bearing retainer with the 4 screws.
Torque: 2.6 N·m (27 kgf·cm, 23 in.·lbf)

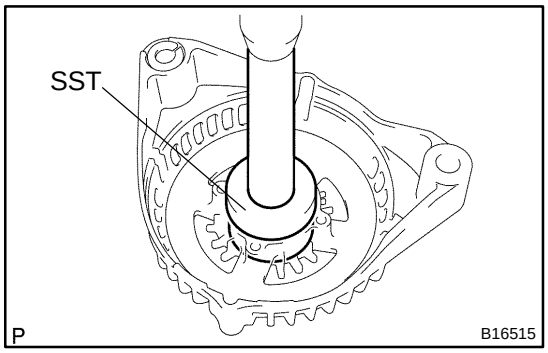

2. REPLACE REAR BEARING

(a) Using SST, remove the bearing cover (outside) and bearing.
SST 09820–00021

NOTICE:
Be careful not to damage the fan.

(b) Remove the bearing cover (inside).

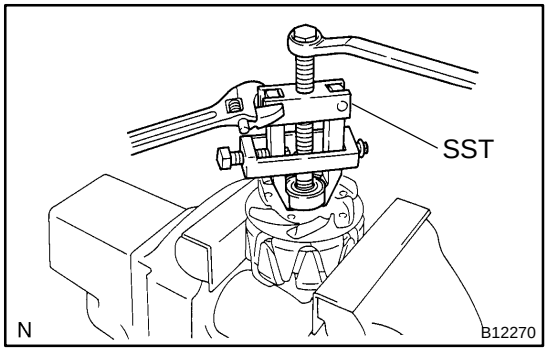

(c) Place the bearing cover (inside) on the rotor.

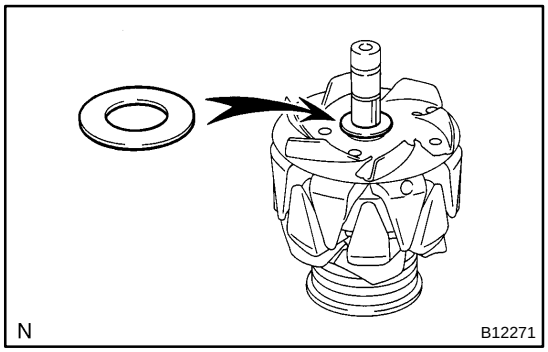

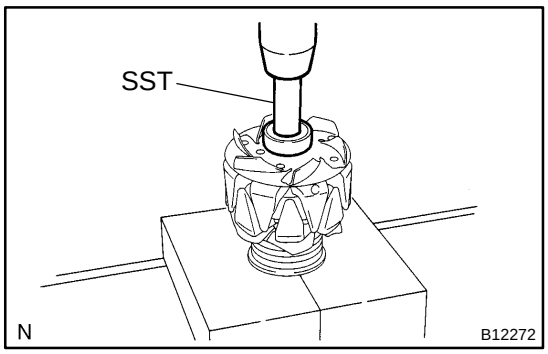

(d) Using SST and a press, press in a new bearing.
SST 09820–00031

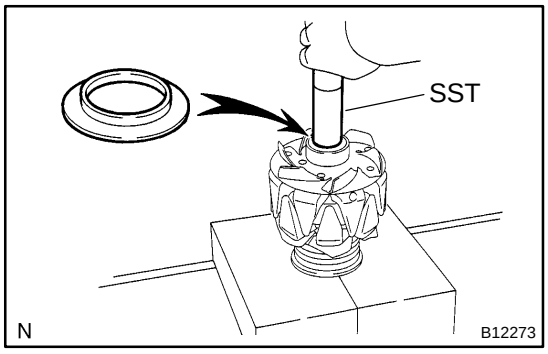

(e) Using SST, push in the bearing cover (outside).
SST 09285–76010

CH0LW–01

REASSEMBLY

1. INSTALL ROTOR TO DRIVE END FRAME

(a) Place the drive end frame on the pulley.

(b) Install the rotor to the drive end frame.

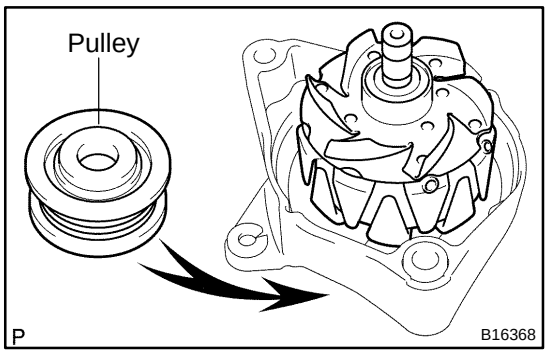

2. INSTALL COIL ASSEMBLY

(a) Place the generator washer on the rotor.

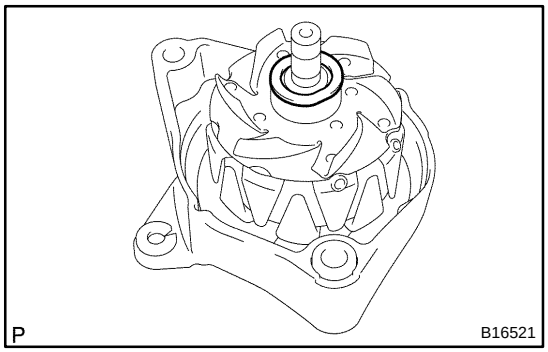

(b) Using SST and a press, slowly press in the coil assembly.
SST 09285–76010

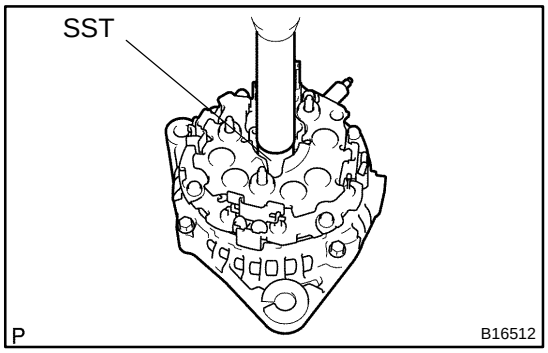

(c) Install the coil assembly with the 4 bolts.
Torque: 5.8 N·m (59 kgf·cm, 51 in.·lbf)

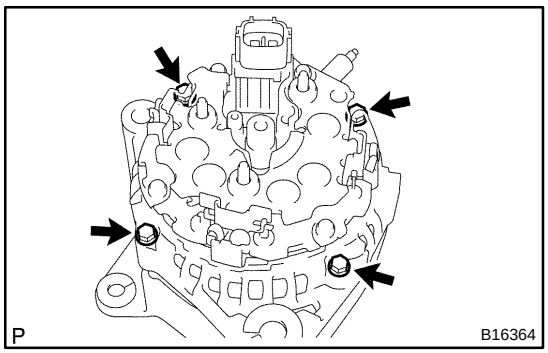

3. INSTALL PULLEY

(a) Install the pulley to the rotor shaft by tightening the pulley nut by hand.

(b) Hold SST (A) with a torque wrench, and tighten SST (B) clockwise to the specified torque.
SST 09820–63011
Torque: 39 N·m (400 kgf·cm, 29 ft·lbf)

(c) Check that SST (A) is secured to the pulley shaft.

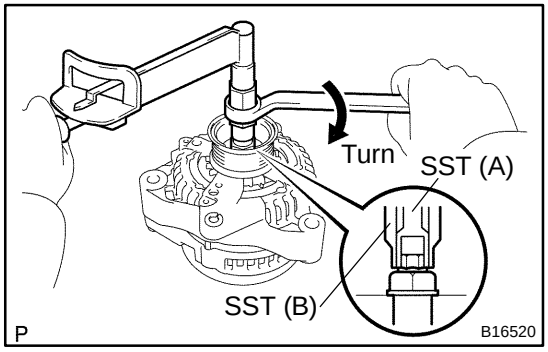

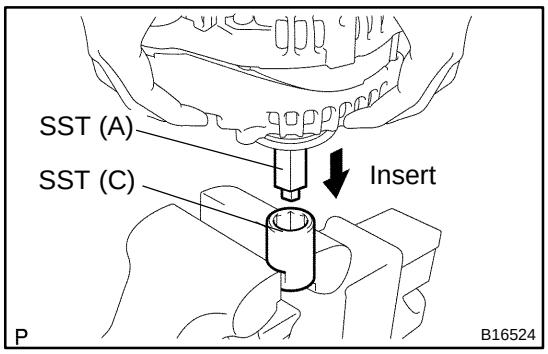

(d) Mount SST (C) in a vise.
(e) Insert SST (B) into SST (C), and attach the pulley nut to SST (C).

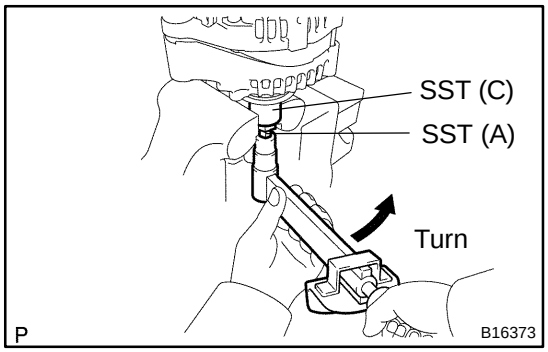

(f) To torque the pulley nut, turn SST (A) in the direction shown in the illustration.
Torque: 110.5 N·m (1,125 kgf·cm, 81 ft·lbf)
(g) Remove the generator from SST (C).

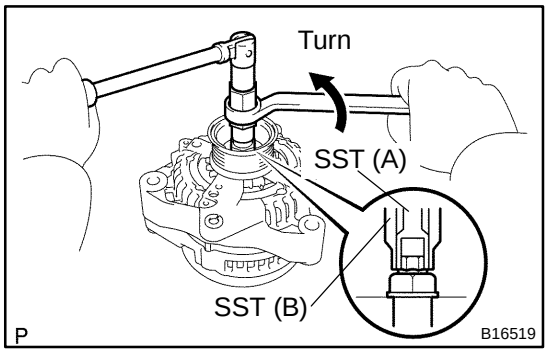

(h) Turn SST (B), and remove SST (A and B).

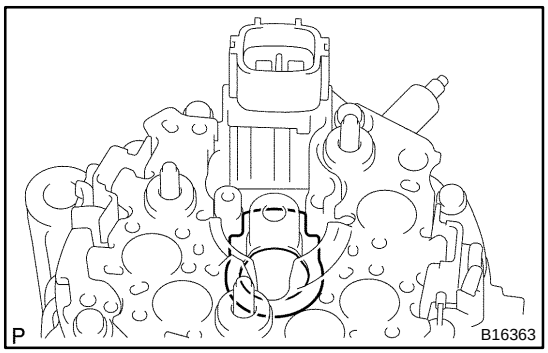

4. INSTALL BRUSH HOLDER
(a) Place the front seal plate on the coil assembly.

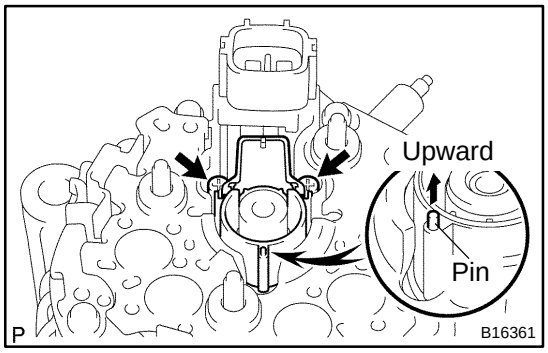

(b) Place the brush holder on the coil assembly with the pin facing upward.

NOTICE:
Be careful of the holder installation direction.

(c) Install the 2 screws.
Torque: 1.8 N·m (18 kgf·cm, 16 in.·lbf)

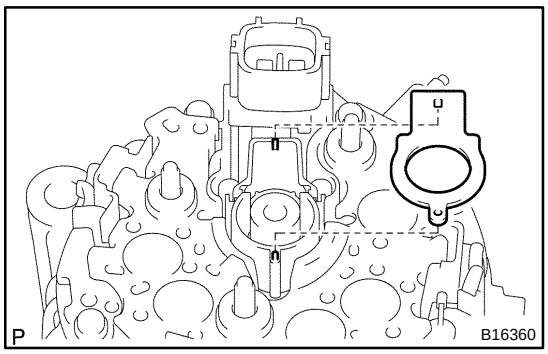

(d) Align the pins of the brush holder with the holes of the rear seal plate, and install the rear seal plate.

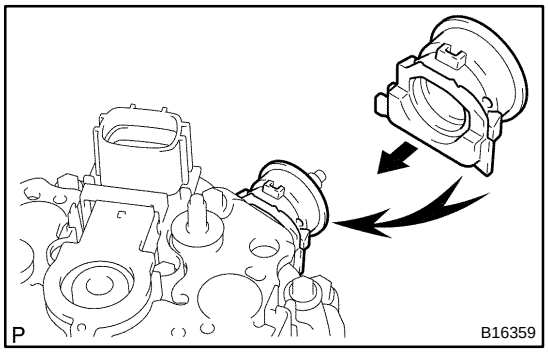

5. INSTALL REAR END COVER

(a) Install the terminal insulator.

NOTICE:

Be careful of the terminal insulator installation direction.

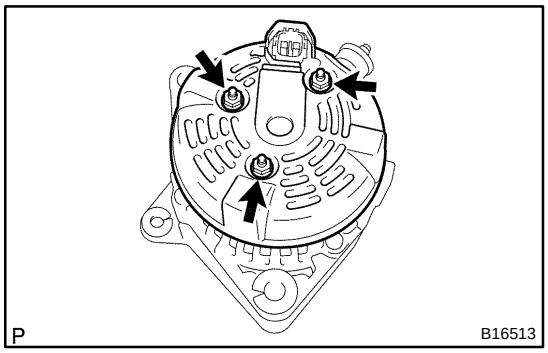

(b) Install the end cover with the 3 nuts.

Torque: 4.6 N·m (47 kgf·cm, 41 in.·lbf)

6. CHECK THAT ROTOR ROTATES SMOOTHLY

CH0LX–01

INSTALLATION

1. INSTALL GENERATOR

(a) Install the generator with the bolt and 2 nuts.
Torque: 39 N·m (400 kgf·cm, 29 ft·lbf)

(b) Connect the generator connector.

(c) Connect the generator wire with the nut.

(d) Install the terminal cap.

(e) Install the wire clamp to the cord clip on the generator.

2. INSTALL PS VANE PUMP (See page SR–51)

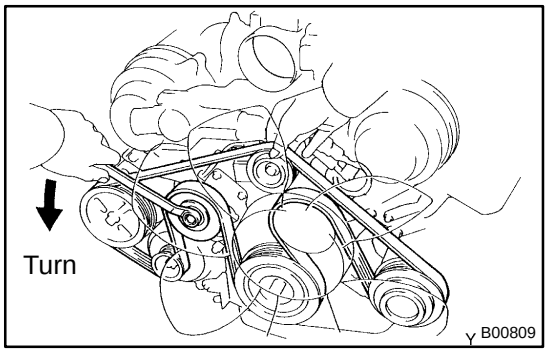

3. INSTALL DRIVE BELT

Install the belt by turning the belt tensioner counterclockwise.

HINT:

The pulley bolt for the belt tensioner has a left–hand thread.

4. CONNECT INTAKE AIR CONNECTOR TO THROTTLE BODY

5. PERFORM ON–VEHICLE INSPECTION (See page CH–1)

6. INSTALL THROTTLE BODY COVER

7. INSTALL ENGINE UNDER COVER

CHARGING SYSTEM

CH0J3–02

ON–VEHICLE INSPECTION

CAUTION:

- **Check that the battery cables are connected to the correct terminals.**
- **Disconnect the battery cables when the battery is given a quick charge.**
- **Do not perform tests with a high voltage insulation resistance tester.**
- **Never disconnect the battery while the engine is running.**
- **Check that the charging cable is tightened on terminal B of the alternator generates or not with connecting terminal F to the other terminal.**

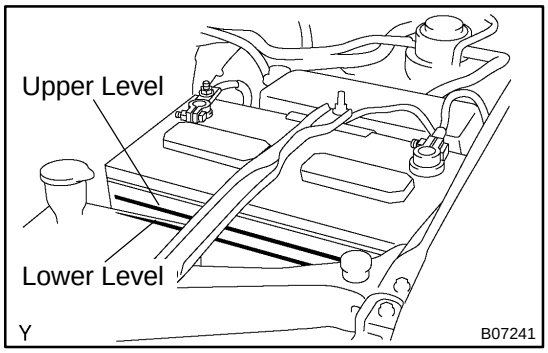

1. CHECK BATTERY ELECTROLYTE LEVEL

Check the electrolyte quantity of each cell.

Maintenance–free Battery:

If under the lower level, replace the battery (or add distilled water if possible) and check the charging system.

Except Maintenance–free Battery:

If under the lower level, add distilled water.

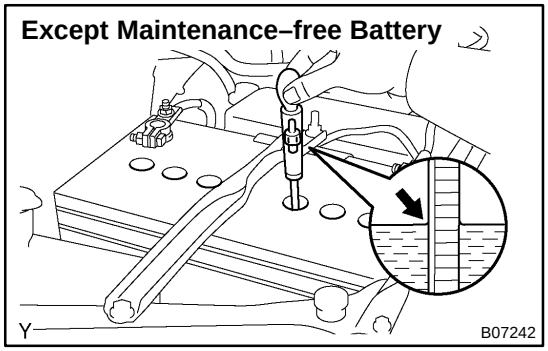

2. Except Maintenance–free Battery: CHECK BATTERY SPECIFIC GRAVITY

Check the specific gravity of each cell.

Standard specific gravity: 1.25 – 1.29 at 20˚C (68˚F)

If the specific gravity is less than specification, charge the battery.

3. Maintenance–free Battery: CHECK BATTERY VOLTAGE

(a) After having driven the vehicle and in the case that 20 minutes have not passed after having stopped the engine, turn the ignition switch ON and turn on the electrical system (headlight, blower motor, rear defogger etc.) for 60 seconds to remove the surface charge.

(b) Turn the ignition switch OFF and turn off the electrical systems.

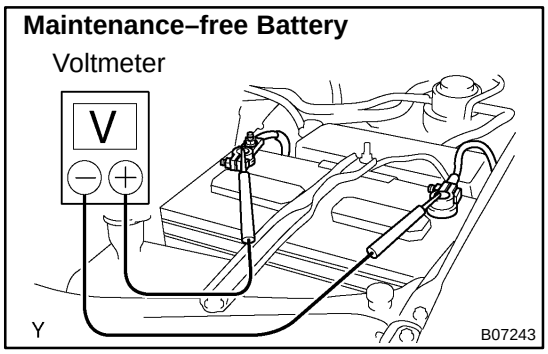

(c) Measure the battery voltage between the negative (–) and positive (+) terminals of the battery.
Standard voltage: 12.5 – 12.9 V at 20˚C (68˚F)

If the voltage is less than specification, charge the battery.

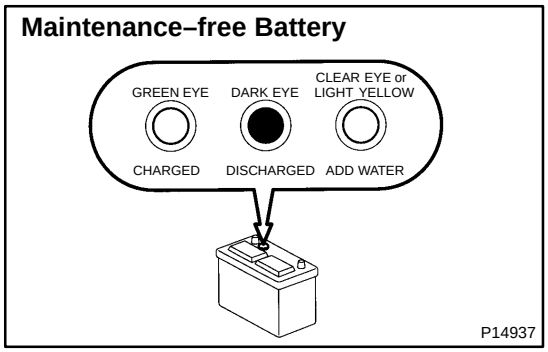

HINT:
Check the indicator as shown in the illustration.

4. CHECK BATTERY TERMINALS, FUSIBLE LINK AND FUSES

(a) Check that the battery terminals are not loose or corroded.

(b) Check the fusible link and fuses for continuity.

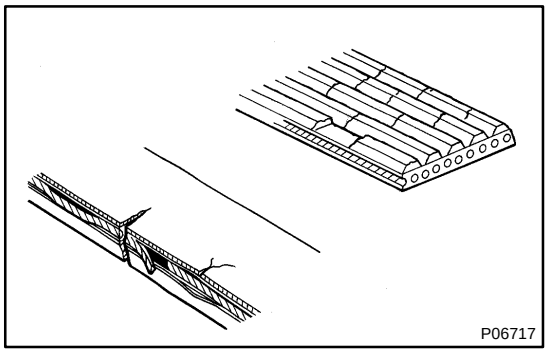

5. INSPECT DRIVE BELT

(a) Visually check the belt for excessive wear, frayed cords etc.

HINT:
Cracks on the ribbed side of the belt are considered acceptable. If the belt has chunks missing from the ribs, it should be replaced.

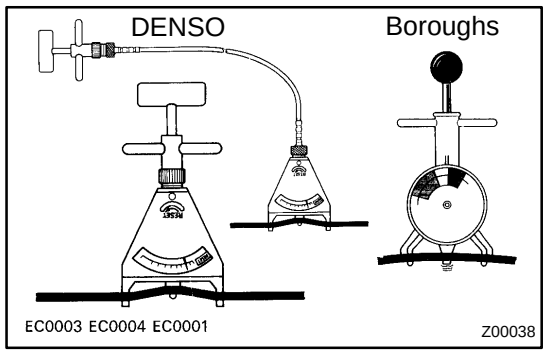

(b) Using a belt tension gauge, check the drive belt tension.
Belt tension gauge:
DENSO BTG 20 (95506–00020) or
Boroughs No. BT–33–73F
Drive belt tension:

New belt	160 ± 25 lbf
Used belt	100 ± 20 lbf

If necessary, adjust the drive belt tension.

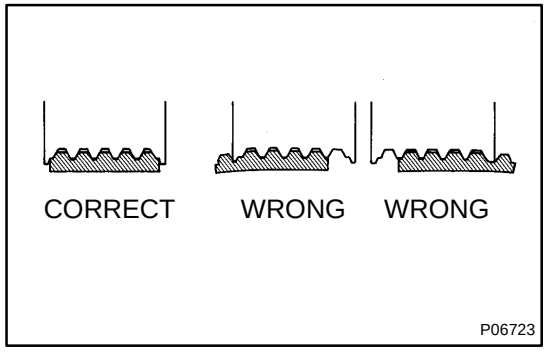

HINT:

- ”New belt” refers to a belt which has been used less than 5 minutes on a running engine.
- ”Used belt” refers to a belt which has been used on a running engine for 5 minutes or more.
- After installing the drive belt, check that it fits properly in the ribbed grooves. Check with your hand to confirm that the belt has not slipped out of the groove on the bottom of the crank pulley.

▲ After installing a new belt, run the engine for approx. 5 minutes and then recheck the tension.

6. VISUALLY CHECK GENERATOR WIRING AND LISTEN FOR ABNORMAL NOISES

(a) Check that the wiring is in good condition.

(b) Check that there is no abnormal noise from the generator while the engine is running.

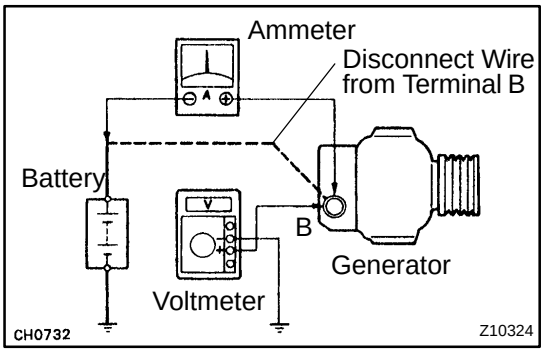

7. CHECK CHARGING CIRCUIT WITHOUT LOAD

HINT:

If a battery/generator tester is available, connect the tester to the charging circuit as per manufacturer's instructions.

(a) If a tester is not available, connect a voltmeter and ammeter to the charging circuit as follows:

▲ Disconnect the wire from terminal B of the generator and connect the wire to the negative (–) terminal of the ammeter.

▲ Connect the test lead from the positive (+) terminal of the ammeter to terminal B of the generator.

▲ Connect the positive (+) lead of the voltmeter to terminal B of the generator.

▲ Ground the negative (–) lead of the voltmeter.

(b) Check the charging circuit as follows:

With the engine running from idling to 2,000 rpm, check the reading on the ammeter and voltmeter.

Standard amperage: 10 A or less

Standard voltage: 13.2 – 14.8 V

If the voltage reading is greater than the standard voltage, replace the voltage regulator.

8. INSPECT CHARGING CIRCUIT WITH LOAD

(a) With the engine running at 2,000 rpm, turn on the high beam headlights and place the heater blower switch at HI.

(b) Check the reading on the ammeter.

Standard amperage: 30 A or more

If the ammeter reading is less than standard amperage, repair the generator.

HINT:

If the battery is fully charged, the indication will sometimes be less than standard amperage.

GENERATOR

COMPONENTS

CH02J–06

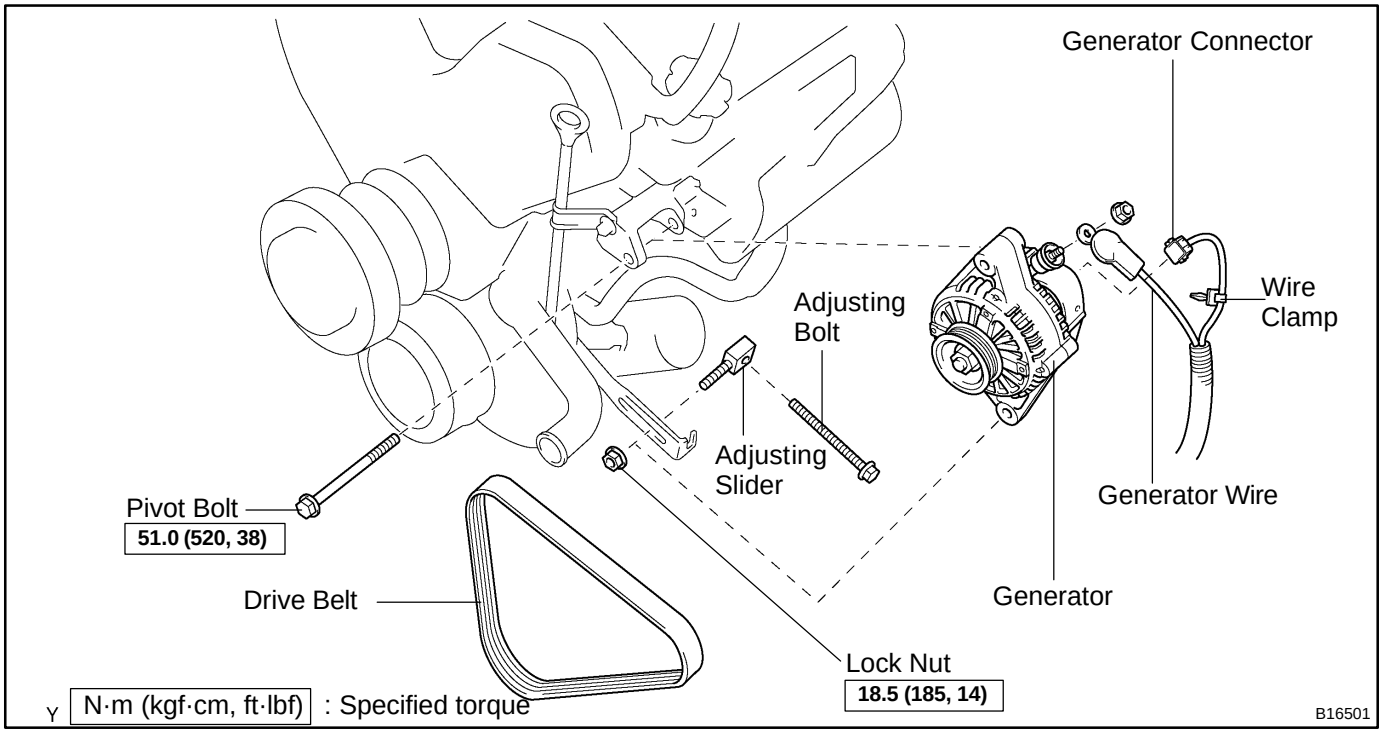

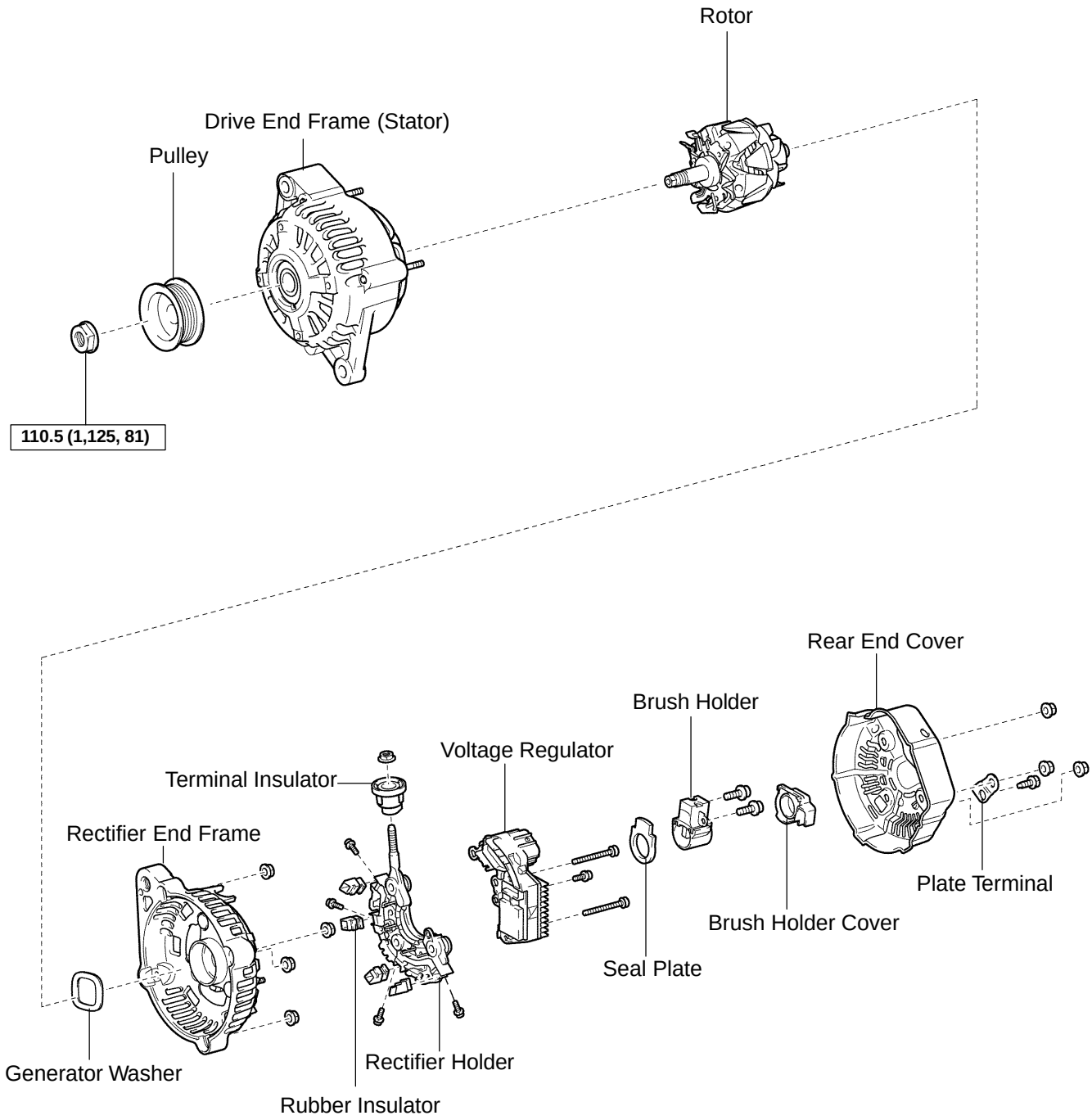
Rotor
Drive End Frame (Stator)
Pulley
110.5 (1,125, 81)
Rear End Cover
Brush Holder
Voltage Regulator
Terminal Insulator
Rectifier End Frame
Plate Terminal
Brush Holder Cover
Seal Plate
Generator Washer
Rectifier Holder
Rubber Insulator
N·m (kgf·cm, ft·lbf) : Specified torque
P ▲ Non–reusable part
B16589

CH02K–04

REMOVAL

1. DISCONNECT WIRING FROM GENERATOR

(a) Disconnect the connector from the generator.

(b) Remove the nut and disconnect the wire from the generator.

(c) Disconnect the wire clamp from the generator.

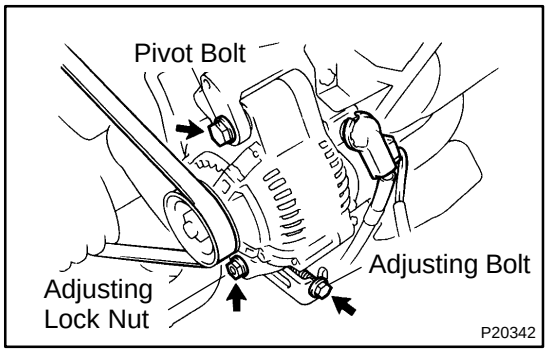

2. REMOVE GENERATOR DRIVE BELT

(a) Loosen the adjust lock nut, bolt and pivot bolt.

(b) Loosen the adjusting belt, and remove the drive belt.

3. REMOVE GENERATOR

Remove the pivot bolt, adjusting lock nut, adjusting bolt, adjusting slider and generator.

CH0LJ–01

DISASSEMBLY

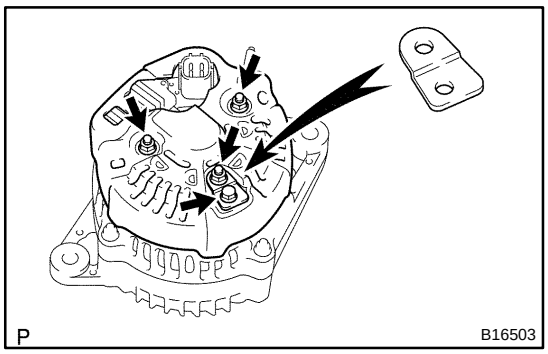

1. REMOVE REAR END COVER

(a) Remove the nut and terminal insulator.
(b) Remove the bolt 3 nuts, plate terminal and end cover.
(c) Remove the brush holder cover from the brush holder.

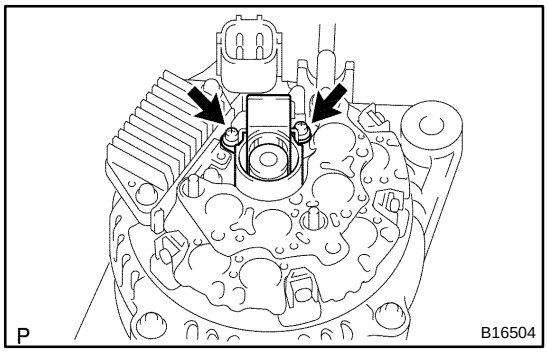

2. REMOVE BRUSH HOLDER

(a) Remove the 2 screws and brush holder.
(b) Remove the seal plate from the rectifier end frame.

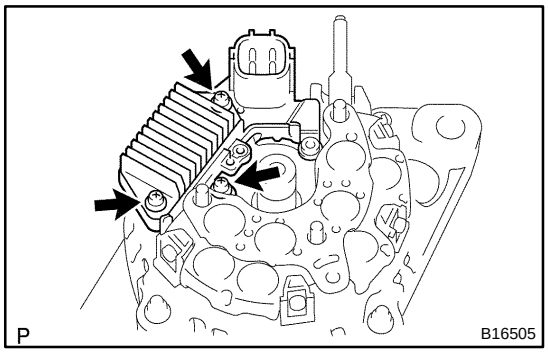

3. REMOVE VOLTAGE REGULATOR

Remove the 3 screws and voltage regulator.

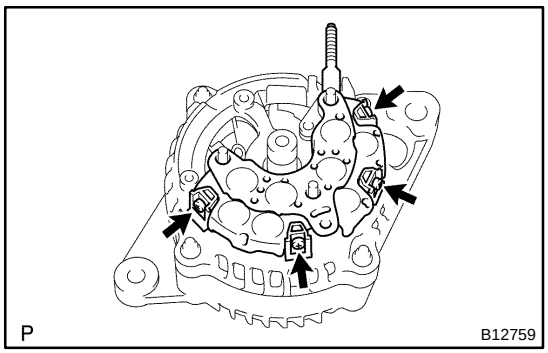

4. REMOVE RECTIFIER HOLDER

(a) Remove the 4 screws and rectifier holder.
(b) Remove the 4 rubber insulators.

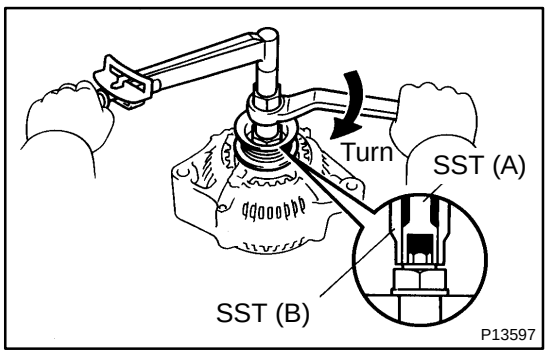

5. REMOVE PULLEY

(a) Hold SST (A) with a torque wrench, and tighten SST (B) clockwise to the specified torque.
SST 09820–63011
Torque: 39 N·m (400 kgf·cm, 29 ft·lbf)
(b) Check that SST (A) is secured to the rotor shaft.

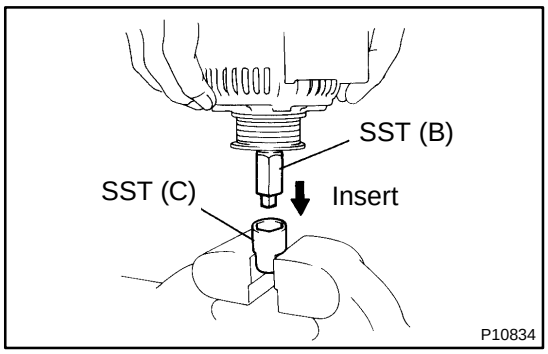

(c) Mount SST (C) in a vise.
(d) Insert SST (B) into SST (C), and attach the pulley nut to SST (C).

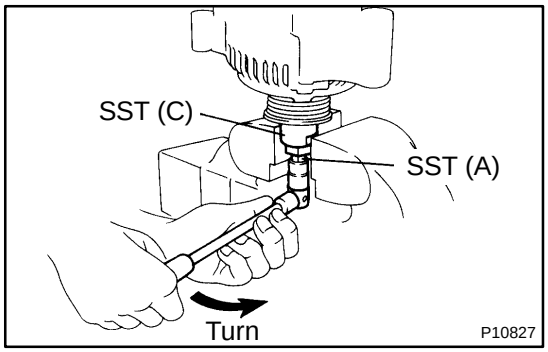

(e) To loosen the pulley nut, turn SST (A) in the direction shown in the illustration.

NOTICE:
To prevent damage to the rotor shaft, do not loosen the pulley nut more than one–half of a turn.

(f) Remove the generator from SST (C).

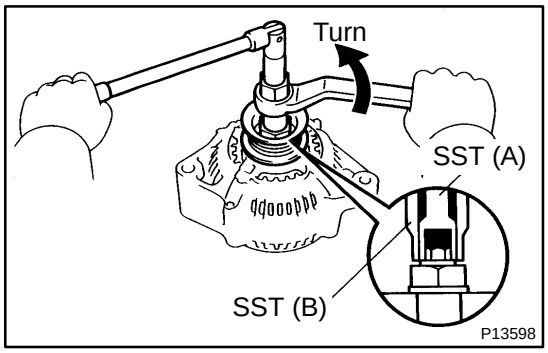

(g) Turn SST (B), and remove SST (A and B).
(h) Remove the pulley nut and pulley.

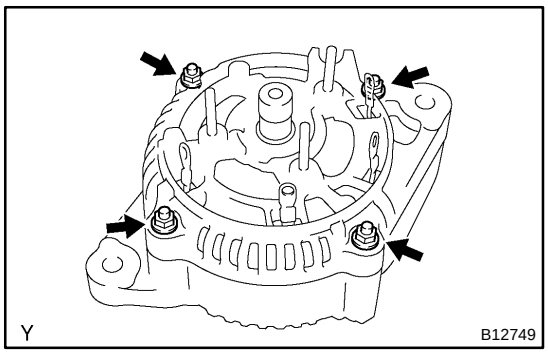

6. REMOVE RECTIFIER END FRAME

(a) Remove the 4 nuts.

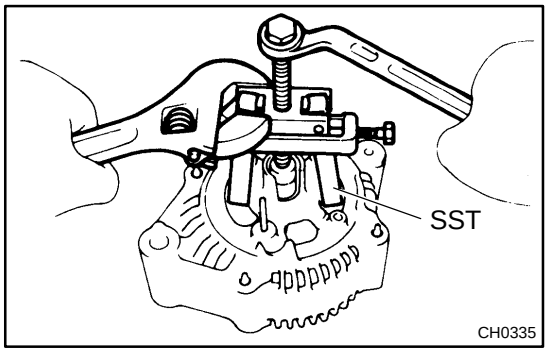

(b) Using SST, remove the rectifier end frame.
SST 09286–46011
(c) Remove the generator washer.

7. REMOVE ROTOR FROM DRIVE END FRAME

CH0J4–02

INSPECTION

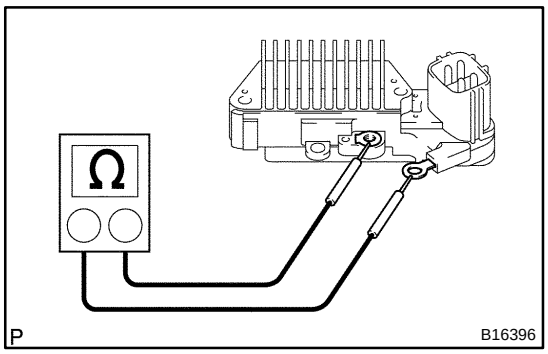

1. INSPECT VOLTAGE REGULATOR

(a) Using an ohmmeter, check the continuity between terminals F and B.

Standard:

When the positive and negative poles between terminals F and B are exchanged, there is continuity in one way but no continuity in another way.

If the continuity is not as specified, replace the regulator.

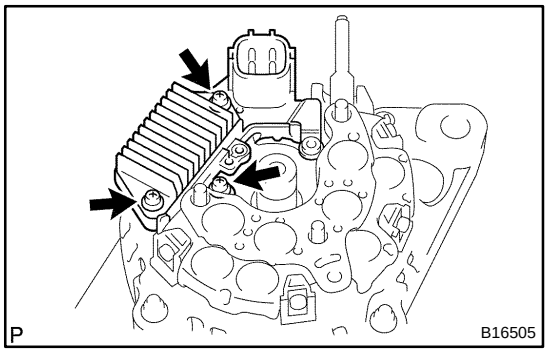

(b) Using an ohmmeter, check the continuity between terminals F and E.

Standard:

When the positive and negative poles between terminals F and E are exchanged, there is continuity in one way but no continuity in another way.

If the continuity is not as specified, replace the regulator.

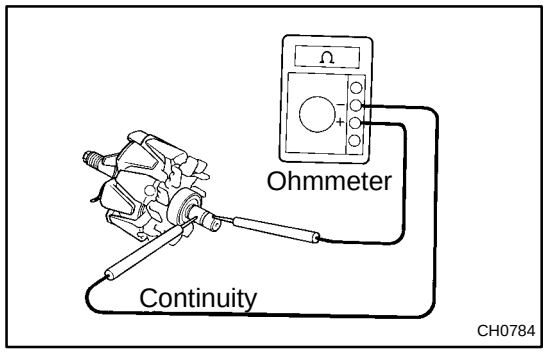

2. INSPECT ROTOR FOR OPEN CIRCUIT

(a) Check the rotor for open circuit.

Using an ohmmeter, check that there is continuity between the slip rings.

Standard resistance: 2.1 – 2.5 Ω at 20˚C (68˚F)

If there is no continuity, replace the rotor.

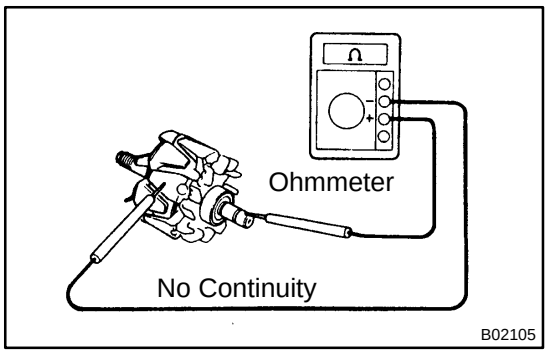

(b) Check the rotor for ground.

Using an ohmmeter, check that there is no continuity between the slip ring and rotor.

If there is continuity, replace the rotor.

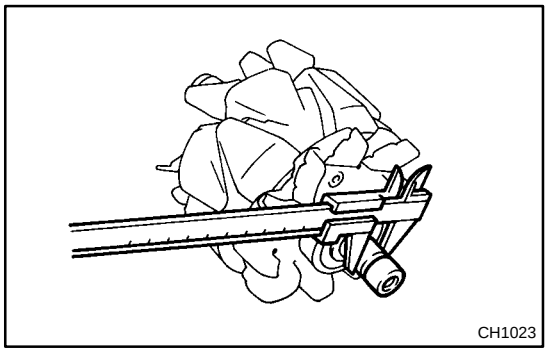

(c) Check that the slip rings are not rough or scored.

If rough or scored, replace the rotor.

(d) Using vernier calipers, measure the slip ring diameters.

Standard diameter: 14.2 – 14.4 mm (0.559 – 0.567 in.)

Minimum diameter: 12.8 mm (0.504 in.)

If the diameter is less than minimum, replace the rotor.

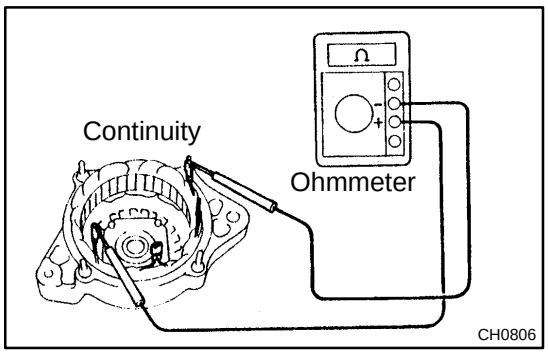

3. INSPECT STATOR FOR OPEN CIRCUIT

(a) Check the stator for open circuit.
Using an ohmmeter, check that there is continuity between the coil leads.

If there is no continuity, replace the drive end frame assembly.

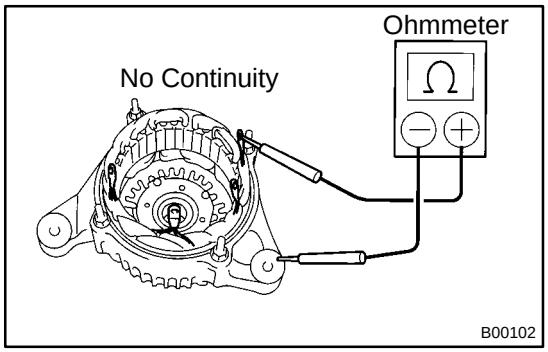

(b) Check the stator for ground.
Using an ohmmeter, check that there is no continuity between the coil lead and drive end frame.

If there is continuity, replace the drive end frame assembly.

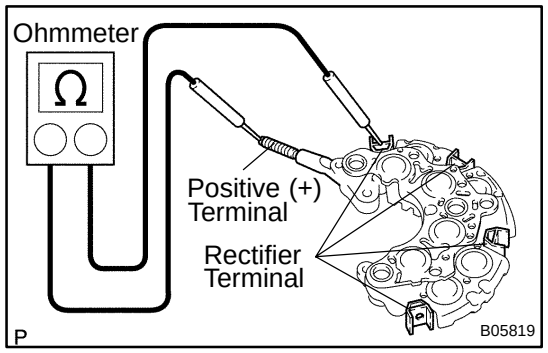

4. INSPECT POSITIVE RECTIFIER

(a) Check the positive (+) rectifire.
(1) Using an ohmmeter, connect one tester probe to the positive (+) terminal and the other to each rectifier terminal.
(2) Reverse the polarity of the tester probes and repeat step (a).
(3) Check that one shows continuity and the other shows no continuity.

If continuity is not as specified, replace the rectifier holder.

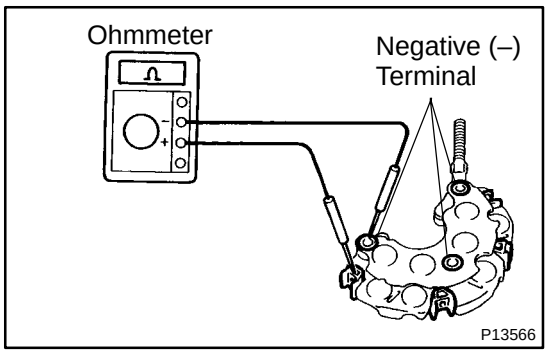

(b) Check the negative (–) rectifire.
(1) Using an ohmmeter, connect one tester probe to each negative (–) terminal and the other to each rectifier terminal.
(2) Reverse the polarity of the tester probes and repeat step (a).
(3) Check that one shows continuity and the other shows no continuity.

If continuity is not as specified, replace the rectifier holder.

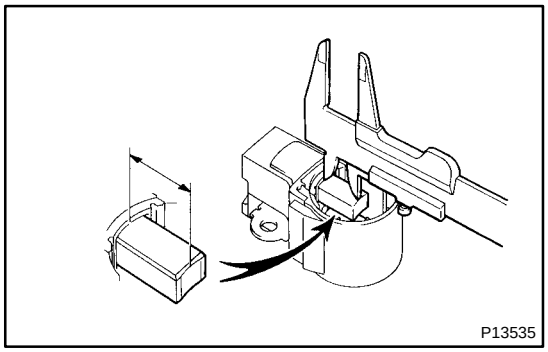

5. INSPECT EXPOSED BRUSH LENGTH

Using vernier calipers, measure the exposed brush length.

Standard exposed length:
9.5 – 11.5 mm (0.374 – 0.453 in.)
Minimum exposed length: 1.5 mm (0.059 in.)

If the exposed length is less than minimum, replace the brush holder assembly.

6. INSPECT BEARINGS

Check that the bearing is not rough or worn.

If necessary, replace the drive end frame assembly (front bearing) or rotor assembly (rear bearing).

CH0LK–01

REASSEMBLY

1. PLACE RECTIFIER END FRAME ON PULLEY

2. INSTALL ROTOR TO DRIVE END FRAME

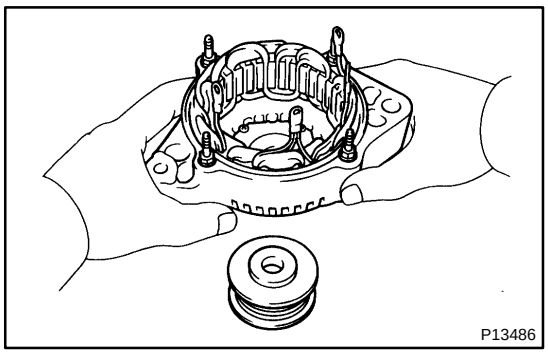

3. INSTALL RECTIFIER END FRAME

(a) Place the generator washer on the rotor.

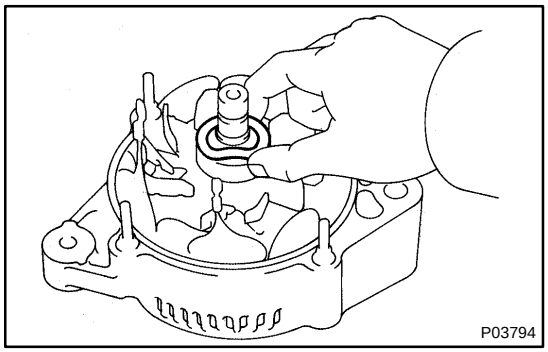

(b) Using a 29 mm socket wrench and press, slowly press in the rectifier end frame.

(c) Install the 4 nuts.
Torque: 4.5 N·m (46 kgf·cm, 39 in.·lbf)

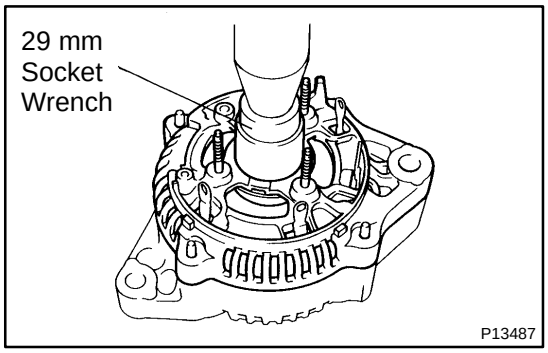

4. INSTALL PULLEY

(a) Install the pulley to the rotor shaft by tightening the pulley nut by hand.

(b) Hold SST (A) with a torque wrench, and tighten SST (B) clockwise to the specified torque.
SST 09820–63011
Torque: 39 N·m (400 kgf·cm, 29 ft·lbf)

(c) Check that SST (A) is secured to the pulley shaft.

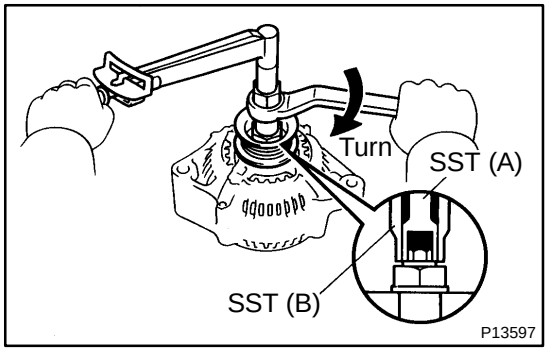

(d) Mount SST (C) in a vise.

(e) Insert SST (B) into SST (C), and attach the pulley nut to SST (C).

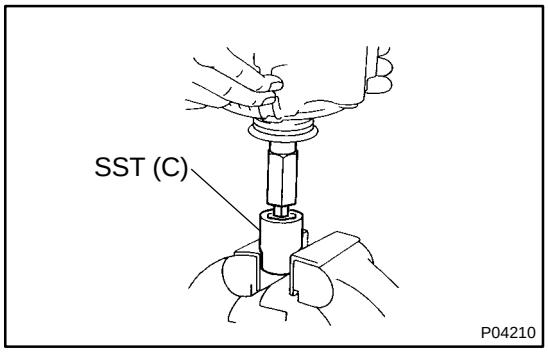

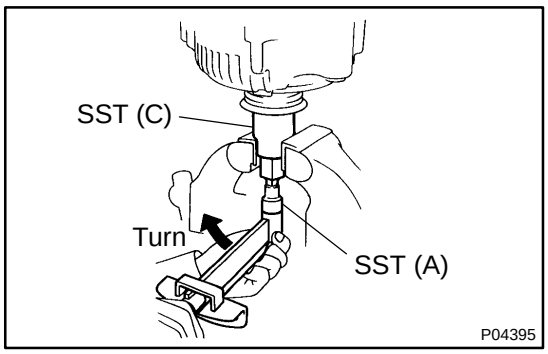

(f) To torque the pulley nut, turn SST (A) in the direction shown in the illustration.
Torque: 110.5 N·m (1,125 kgf·cm, 81 ft·lbf)

(g) Remove the generator from SST (C).

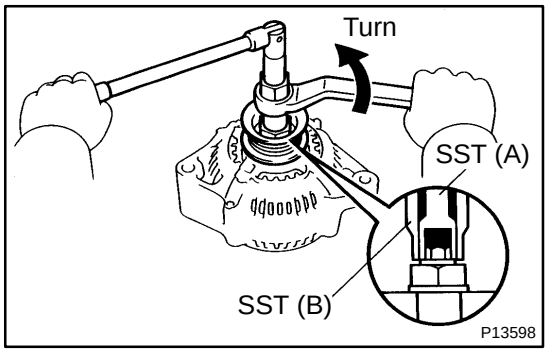

(h) Turn SST (B), and remove SST (A and B).

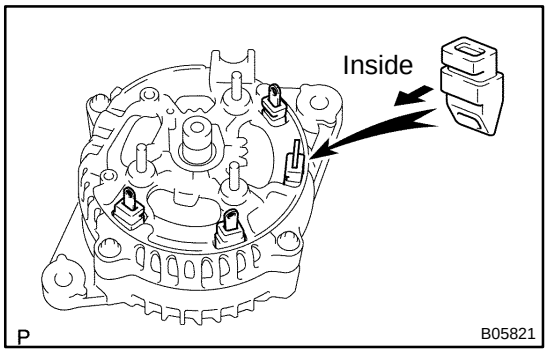

5. INSTALL RECTIFIER HOLDER

(a) Install the 4 rubber insulators on the lead wires.

NOTICE:

Be careful of the rubber insulators installation direction.

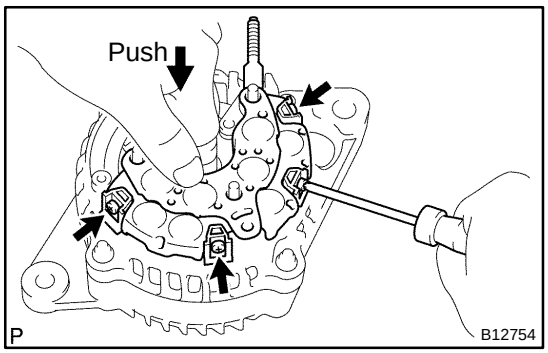

(b) Install the rectifier while pushing it with the 4 screws.
Torque: 2.94 N·m (30 kgf·cm, 26 in.·lbf)

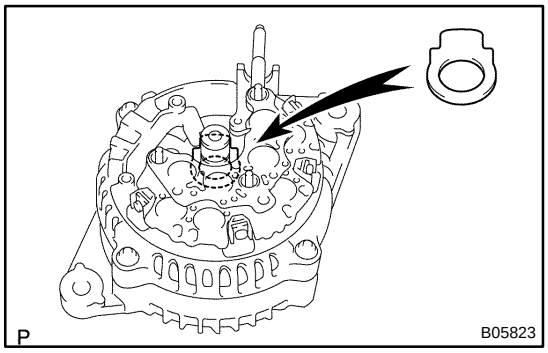

6. INSTALL BRUSH HOLDER AND VOLTAGE REGULATOR

(a) Place the seal plate on the rectifier end frame.

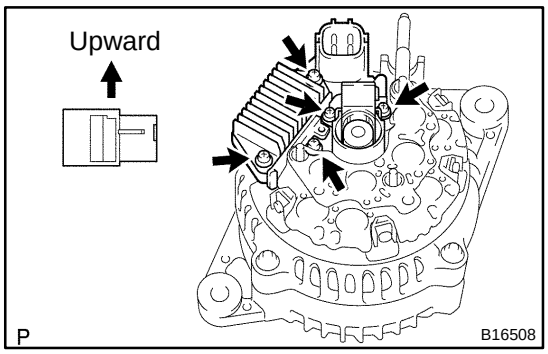

(b) Place the voltage regulator and brush holder on the rectifier end frame.

NOTICE:

Be careful of the brush holder installation direction.

(c) Install the 5 screws.
Torque: 1.96 N·m (20 kgf·cm, 17in.·lbf)

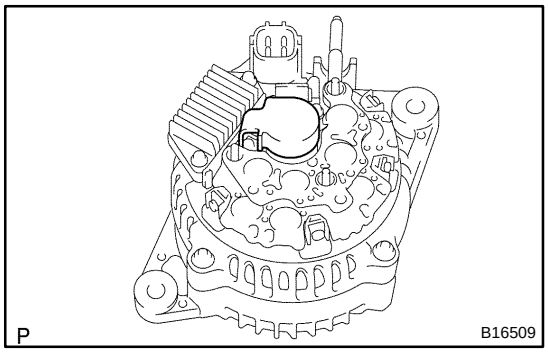

7. INSTALL REAR END COVER

(a) Place the brush holder cover on the brush holder.

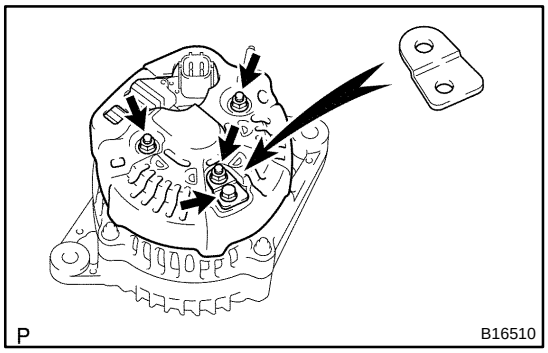

(b) Install the end cover and plate terminal with the bolt and 3 nuts.
Torque:
Bolt: 3.85 N·m (39 kgf·cm, 34 in.·lbf)
Nut: 4.4 N·m (46 kgf·cm, 39 in.·lbf)

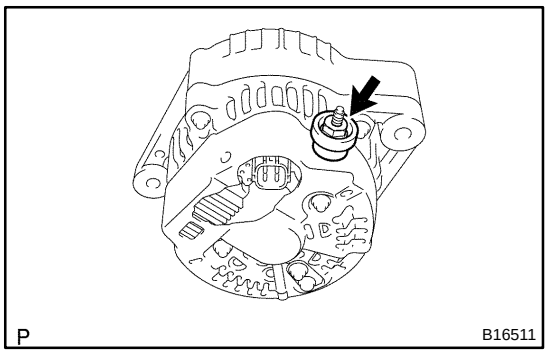

(c) Install the terminal insulator with the nut.
Torque: 4.1 N·m (41.5 kgf·cm, 36 in.·lbf)

8. CHECK THAT ROTOR ROTATES SMOOTHLY

CH0BI–02

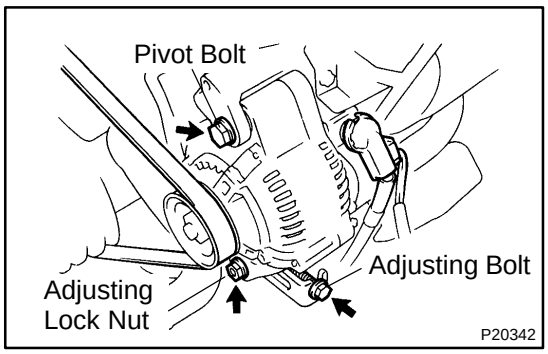

INSTALLATION

1. INSTALL GENERATOR

Temporarily install the generator with the pivot bolt,adjusting slider,adjusting bolt and adjusting lock nut.

2. INSTALL AND ADJUST GENERATOR DRIVE BELT

(a) Install the generator drive belt.

(b) Adjust the drive belt tension with the adjusting bolt (See page CH–1).

(c) Tighten the pivot bolt and adjusting lock nut.

Torque:
Pivot bolt: 51 N·m (520 kgf·cm, 38 ft·lbf)
Lock nut: 18.5 N·m (185 kgf·cm, 14 ft·lbf)

3. CONNECT WIRING TO GENERATOR

(a) Connect the wire clamp to the generator.

(b) Connect the wire to the generator with the nut.

(c) Connect the connector to the generator.

TROUBLESHOOTING

CL026–02

PROBLEM SYMPTOMS TABLE

Use the table below to help you find the cause of the problem. The numbers indicate the priority of the likely cause of the problem. Check each part in order. If necessary, replace these parts.

Symptom	Suspect Area	See page
Clutch grabs/chatters	11. Engine mounting (Loose)	–
	12. Clutch disc (Runout is excessive)	CL–18
	13. Clutch disc (Oily)	CL–16
	14. Clutch disc (Worn out)	CL–16
	15. Clutch disc (Damaged torsion rubber)	CL–18
	16. Clutch disc (Glazed)	CL–16
	17. Diaphragm spring (Out of tip alignment)	CL–20
Clutch pedal spongy	1. Clutch line (Air in line)	–
	2. Master cylinder piston cup (Damaged)	CL–6
	3. Release cylinder piston cup (Damaged)	CL–11
Clutch noisy	1. Release bearing (Worn, dirty or damaged)	CL–16
	2. Input shaft bearing (Worn, dirty or damaged)	–
	3. Clutch disc (Damaged torsion rubber)	CL–18
Clutch slips	1. Clutch pedal (Freeplay out of adjustment)	CL–2
	2. Clutch disc (Oily)	CL–20
	3. Clutch disc (Worn out)	CL–16
	4. Diaphragm spring (Damaged)	CL–16
	5. Pressure plate (Distortion)	CL–16
	6. Flywheel (Distortion)	–
Clutch does not disengage	1. Clutch pedal (Freeplay out of adjustment)	CL–2
	2. Clutch line (Air in line)	–
	3. Master cylinder piston cup (Damaged)	CL–6
	4. Release cylinder piston cup (Damaged)	CL–11
	5. Input shaft bearing (Worn, dirty or damaged)	–
	6. Clutch disc (Out of true)	CL–16
	7. Clutch disc (Runout is excessive)	CL–18
	8. Clutch disc (Lining broken)	CL–16
	9. Clutch disc (Dirty or burred)	CL–16
	10. Clutch disc (Oily)	CL–16
	11. Clutch disc (Lack of spline grease)	CL–20
	12. Diaphragm spring (Damaged)	CL–16
	13. Diaphragm spring (Out of tip alignment)	CL–20
	14. Pressure plate (Distortion)	CL–16

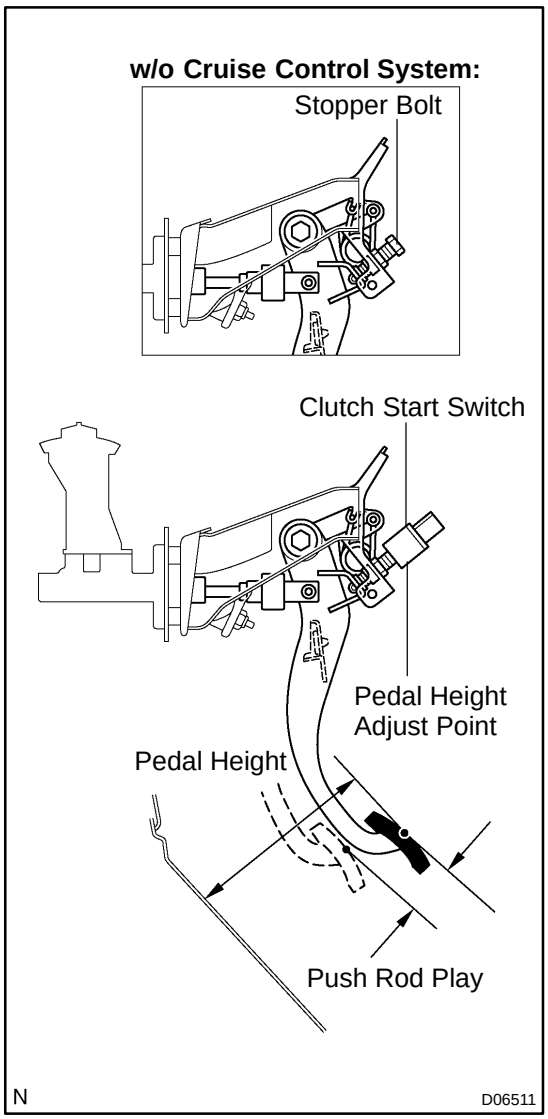

CLUTCH PEDAL

CL027–02

INSPECTION

1. CHECK THAT PEDAL HEIGHT IS CORRECT

Pedal height from dash panel:
160.1 – 170.1 mm (6.303 – 6.697 in.)
Pedal height from dash insulator:
155.1 – 165.1 mm (6.106 – 6.500 in.)

2. IF NECESSARY, ADJUST PEDAL HEIGHT

(a) Loosen the lock nut and turn the stopper bolt or clutch start switch until the height is correct.

(b) Tighten the lock nut.

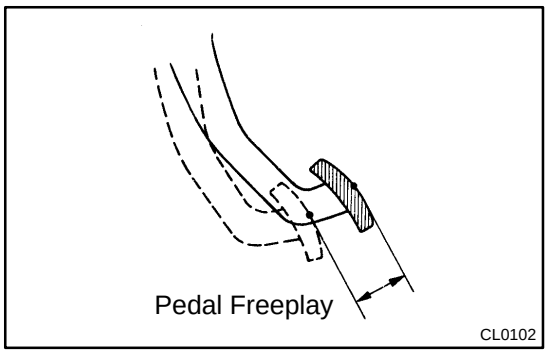

3. CHECK THAT PEDAL FREEPLAY AND PUSH ROD PLAY ARE CORRECT

(a) Push in on the pedal until the beginning of clutch resistance is felt.

Pedal freeplay: 5.0 – 15.0 mm (0.197 – 0.591 in.)

(b) Gently push on the pedal until the resistance begins to increase a little.

Push rod play at pedal top:
1.0 – 5.0 mm (0.039 – 0.197 in.)

4. IF NECESSARY, ADJUST PEDAL FREEPLAY AND PUSH ROD PLAY

(a) Remove the lower finish panel and disconnect the air duct.

(b) Loosen the lock nut and turn the push rod until the freeplay and push rod play are correct.

(c) Tighten the lock nut.

(d) After adjusting the pedal freeplay, check the pedal height.

(e) Connect the air duct and install the lower finish panel.

5. CHECK CLUTCH RELEASE POINT

(a) Pull the parking brake lever and install wheel stopper.

(b) Start the engine and idle the engine.

(c) Without depressing the clutch pedal, slowly shift the shift lever into reverse position until the gears contact.

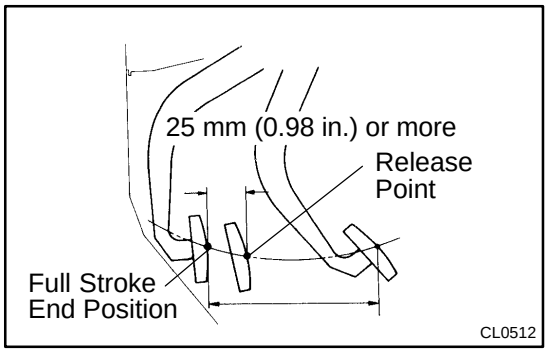

(d) Gradually depress the clutch pedal and measure the stroke from where the gear noise stops (release point) up to the full stroke end position.

Standard distance:
25 mm (0.98 in.) or more
(From pedal stroke end position to release point)

If the distance is not as specified, perform the following operation.

- ▲ Check pedal height.
- ▲ Check push rod play and pedal freeplay.
- ▲ Bleed clutch line.
- ▲ Check clutch cover and disc.

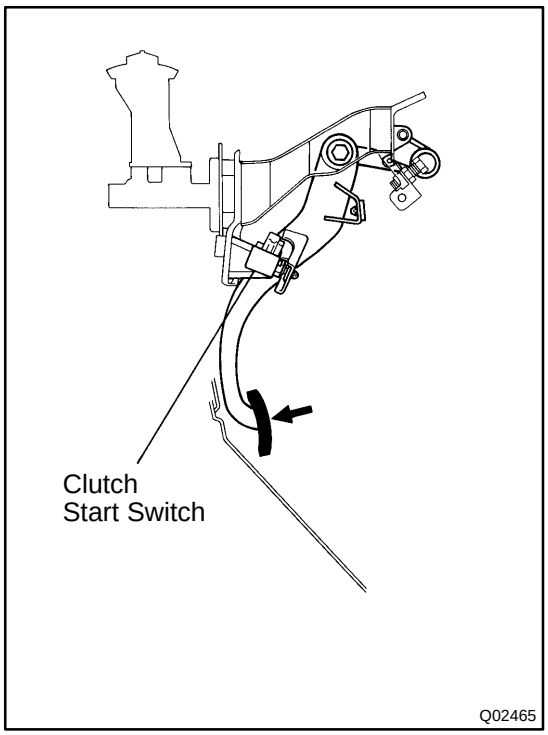

6. CHECK CLUTCH START SYSTEM

(a) Check that the engine does not start when the clutch pedal is released.

(b) Check that the engine starts when the clutch pedal is fully depressed.

If necessary, replace the clutch start switch.

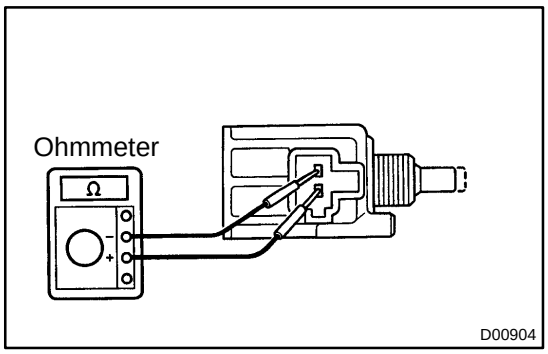

7. CHECK CONTINUITY OF CLUTCH START SWITCH

(a) Disconnect the connector.

(b) Remove the nut and clutch start switch from the clutch pedal bracket.

(c) Check the continuity between terminals when the switch is ON and OFF.

Switch position	Condition
ON (pushed)	Continuity
OFF (free)	No Continuity

If the continuity is not as specified, replace the switch.

(d) Install the clutch start switch to the clutch pedal bracket with the nut.

(e) Connect the connector.

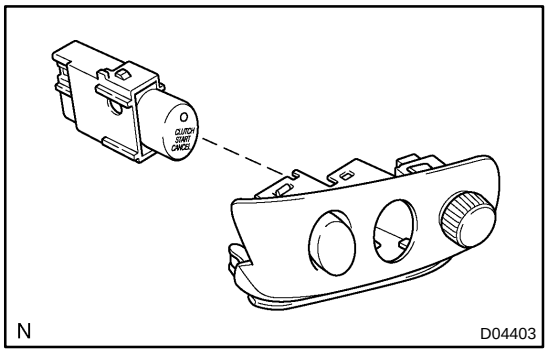

8. CHECK CONTINUITY OF CLUTCH START CANCEL SWITCH

(a) Remove the switch base (See page BO–72).

(b) Remove the clutch start cancel switch from the switch base.

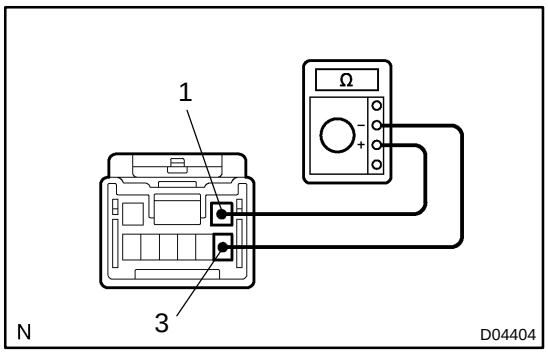

(c) Check that no continuity exists between terminals 1 and 3.

If the continuity is not as specified, replace the clutch start cancel switch.

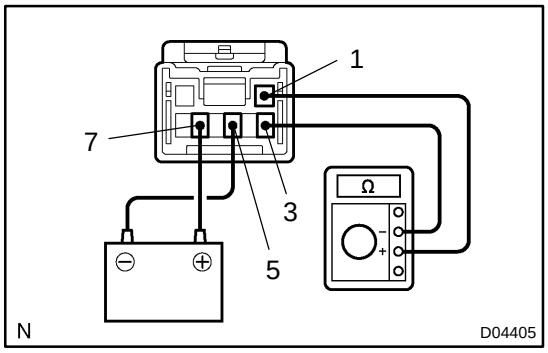

9. CHECK OPERATION OF CLUTCH START CANCEL SWITCH

(a) Connect the positive (+) lead from the battery to terminal 7 and connect negative (–) lead to terminal 5.

(b) Check that no continuity exists between terminals 1 and 3.

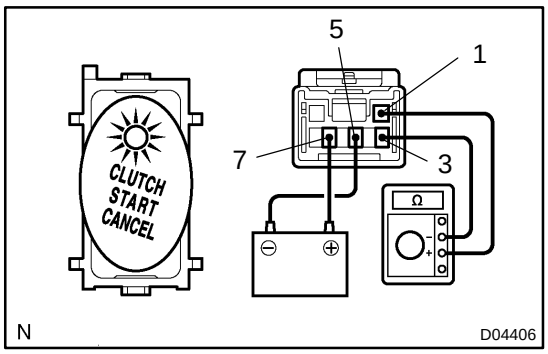

(c) When pushing the switch, check that the indicator light connector and continuity exists between terminal 1 and 3.

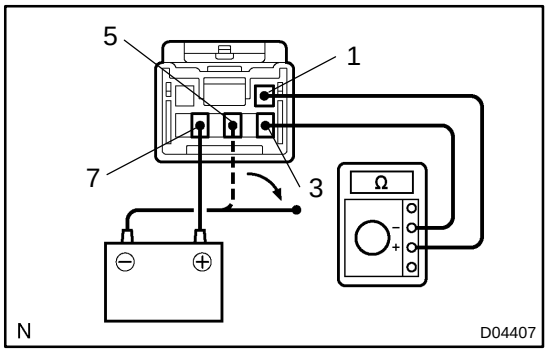

(d) Check that no continuity exists between terminals 1 and 3 when the battery lead is disconnected.

If the continuity is not as specified, replace the clutch start cancel switch.

CLUTCH MASTER CYLINDER

COMPONENTS

CL028–02

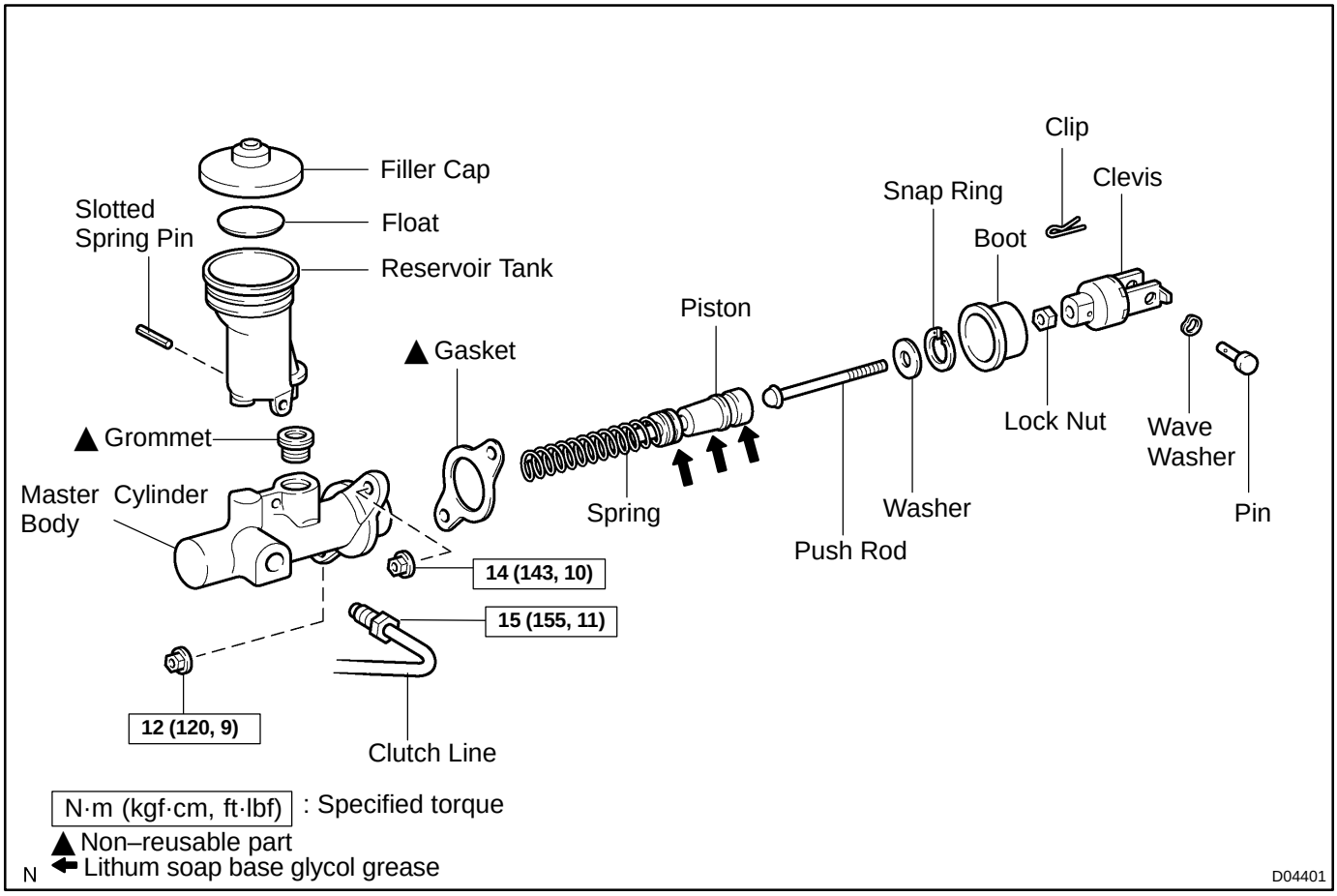

CL082–01

REMOVAL

1. REMOVE FILLER CAP AND FIOAT FROM RESERVOIR

2. DRAW OUT BRAKE FLUID WITH SYRINGE

NOTICE:

Do not let brake fluid remain on a painted surface. Wash it off immediately.

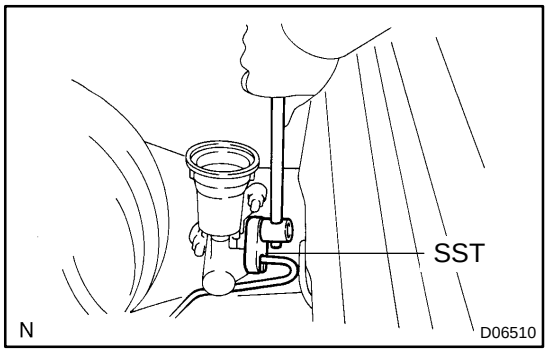

3. DISCONNECT CLUTCH LINE FROM MASTER CYLINDER

Using SST, disconnect the line. Use a container to catch the fluid.

SST 09023–00100

4. REMOVE CLIP AND CLEVIS PIN

(a) Using needle–nose pliers, remove the clip.

(b) Remove the clevis pin and wave washer.

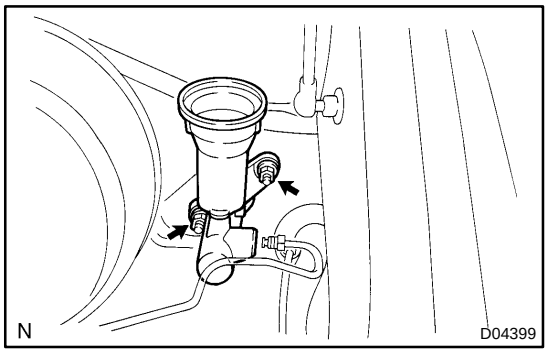

5. REMOVE 2 MOUNTING NUTS AND PULL OUT MASTER CYLINDER

6. REMOVE GASKET

CL02A–02

DISASSEMBLY

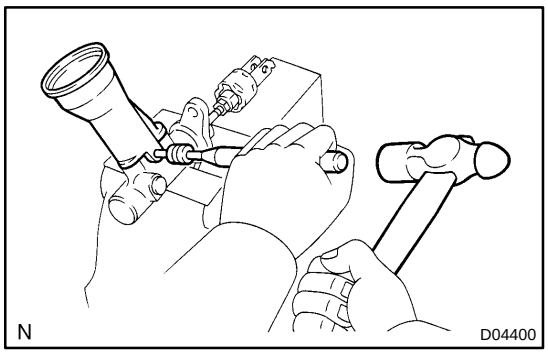

1. REMOVE RESERVOIR TANK

(a) Using a pin punch and hammer, drive out the slotted spring pin.

(b) Remove the reservoir and grommet.

2. REMOVE CLEVIS AND BOOT

(a) Loosen the lock nut to remove the clevis and remove the lock nut.

(b) Remove the boot.

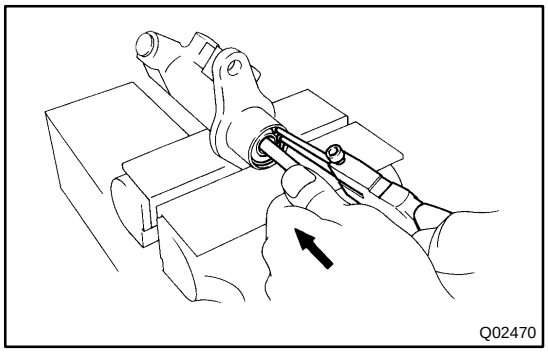

3. REMOVE PUSH ROD

(a) While pushing the push rod, using snap ring pliers, remove the snap ring.

(b) Remove the push rod and washer.

4. REMOVE PISTON WITH SPRING

CL083–01

REASSEMBLY

1. COAT PARTS WITH LITHIUM SOAP BASE GLYCOL GREASE, AS SHOWN

2. INSERT PISTON WITH SPRING INTO CYLINDER

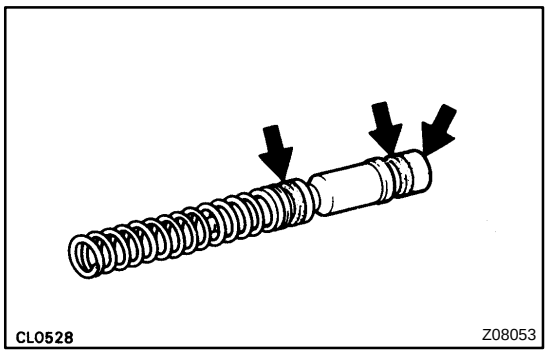

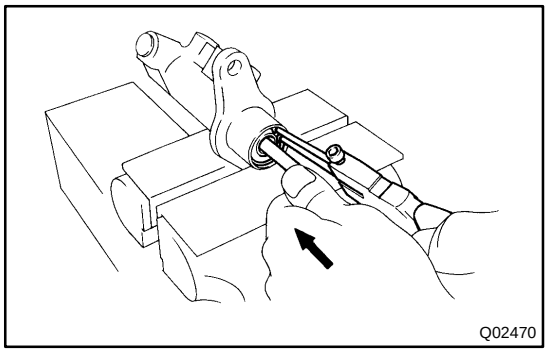

3. INSTALL PUSH ROD AND BOOT

(a) Install the washer to the push rod.

(b) Push the push rod into the piston, using snap ring pliers, install the snap ring.

(c) Install the boot.

4. TEMPORARILY INSTALL LOCK NUT AND CLEVIS

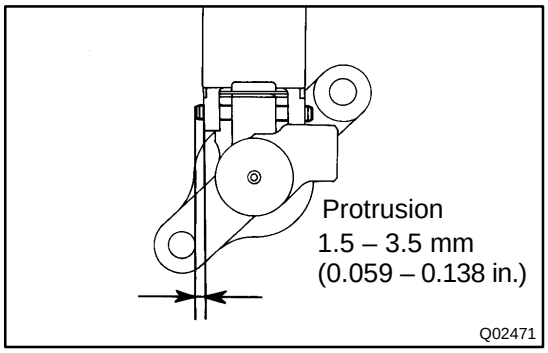

5. INSTALL RESERVOIR

(a) Install the reservoir and a new grommet.

(b) Using a pin punch and hammer, drive in the slotted spring pin.

CL084–01

INSTALLATION

1. INSTALL NEW GASKET

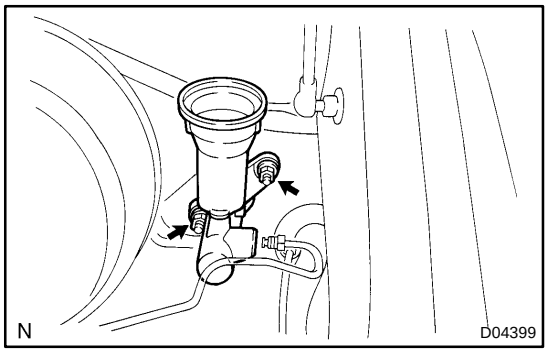

2. INSTALL MASTER CYLINDER WITH 2 MOUNTING NUTS

Torque: 14 N·m (143 kgf·cm, 10 ft·lbf)

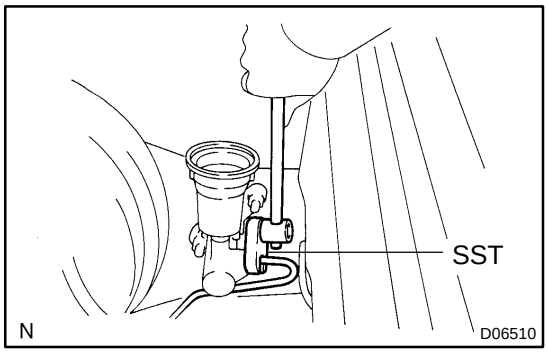

3. CONNECT CLUTCH LINE TO MASTER CYLINDER

Using SST, connect the clutch line.

SST 09023–00100

Torque: 15 N·m (155 kgf·cm, 11 ft·lbf)

4. INSTALL CLEVIS PIN, WAVE WASHER AND CLIP

5. FILL CLUTCH RESERVOIR WITH BRAKE FLUID AND BLEED CLUTCH SYSTEM

6. ADJUST CLUTCH PEDAL (See page CL–2)

7. CHECK FOR LEAKS

CLUTCH RELEASE CYLINDER

CL02D–02

COMPONENTS

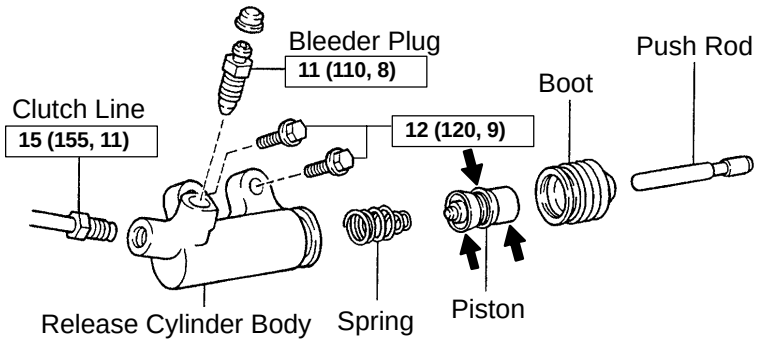

N·m (kgf·cm, ft·lbf) : Specified torque

Lithum soap base glycol grease

Q07554

D05008

CL02E–02

REMOVAL

1. REMOVE FILLER CAP AND FIOAT FROM RESERVOIR

2. DRAW OUT BRAKE FLUID WITH SYRINGE

NOTICE:

Do not let brake fluid remain on a painted surface. Wash it off immediately.

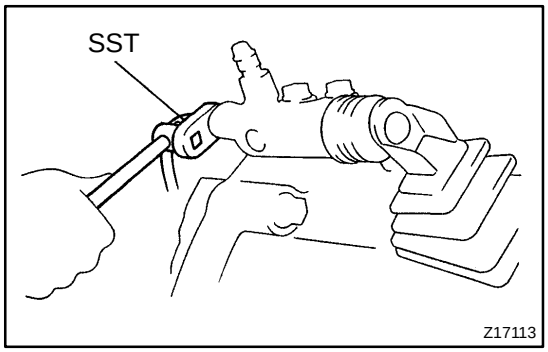

3. DISCONNECT CLUTCH LINE FROM RELEASE CYLINDER

Using SST, disconnect the line. Use a container to catch the fluid.

SST 09023–00100

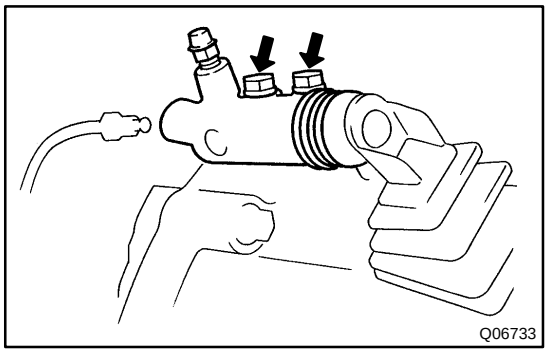

4. REMOVE 2 BOLTS AND PULL OUT RELEASE CYLINDER

CL02F–02

DISASSEMBLY

1. REMOVE BOOT AND PUSH ROD

(a) Pull out the boot with the push rod.

(b) Remove the boot from the push rod.

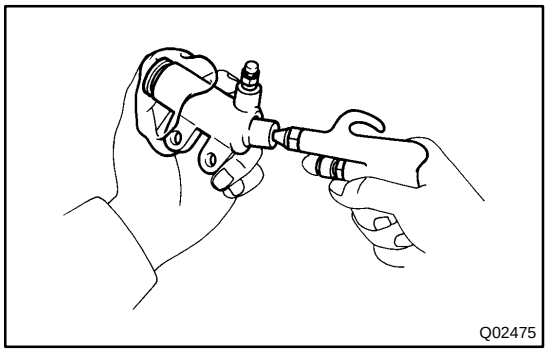

2. REMOVE PISTON AND SPRING

Using compressed air, remove the piston with the spring from the cylinder.

NOTICE:

- **Blowing off the air may cause the piston's jump–out. When removing the piston, hold it with your hand using a waste cloth.**
- **Take care not to splash brake fluid when air–blowing.**

3. REMOVE BLEEDER PLUG

CL02G–02

REASSEMBLY

1. INSTALL BLEEDER PLUG

Torque: 11 N·m (110 kgf·cm, 8 ft·lbf)

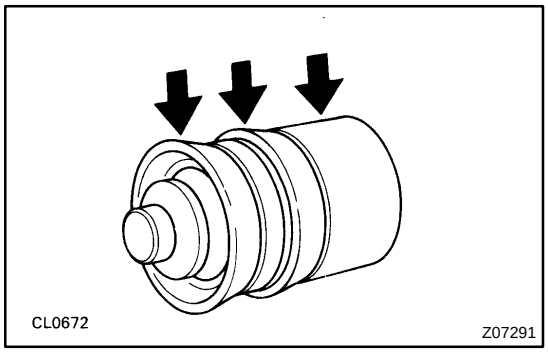

2. COAT PISTON WITH LITHIUM SOAP BASE GLYCOL GREASE, AS SHOWN

3. INSTALL PISTON AND SPRING INTO CYLINDER

4. INSTALL BOOT AND PUSH ROD

(a) Install the push rod to the boot.

(b) Install the boot with the push rod to the cylinder.

CL085–01

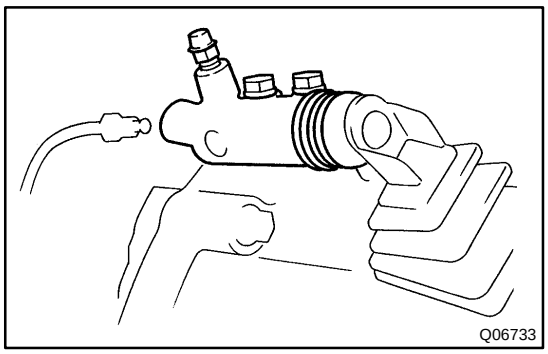

INSTALLATION

1. INSTALL RELEASE CYLINDER WITH 2 BOLTS
Torque: 12 N·m (120 kgf·cm, 9 ft·lbf)

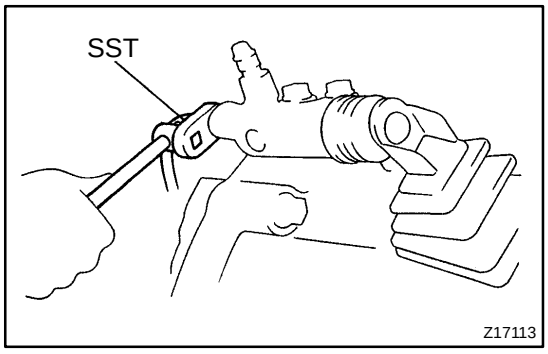

2. CONNECT CLUTCH LINE TO RELEASE CYLINDER
Using SST, connect the clutch line.
SST 09023–00100
Torque: 15 N·m (155 kgf·cm, 11 ft·lbf)

3. FILL CLUTCH RESERVOIR WITH BRAKE FLUID AND BLEED CLUTCH SYSTEM

4. CHECK FOR LEAKS

CLUTCH UNIT

COMPONENTS

CL02I–02

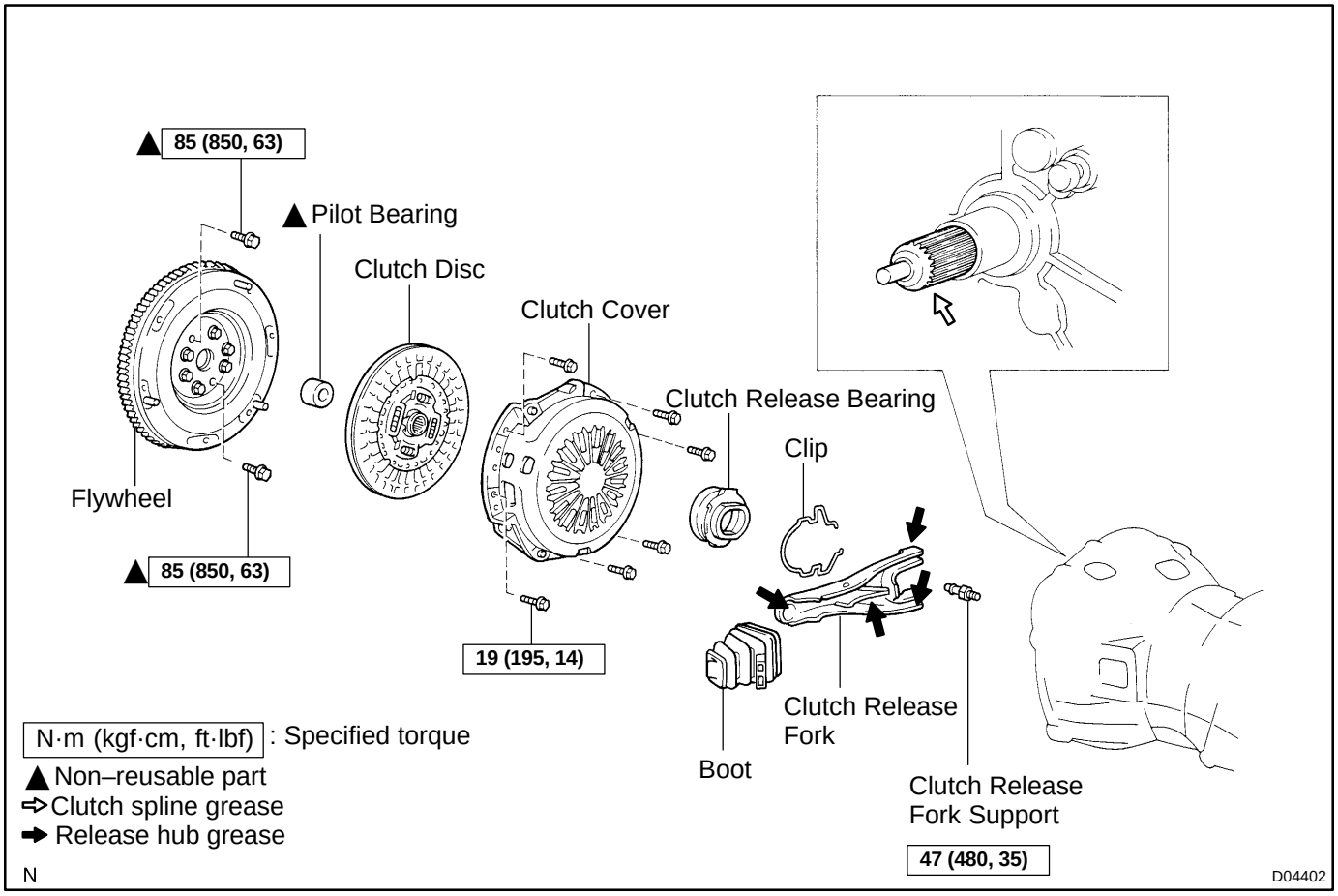

CL02J–02

REMOVAL

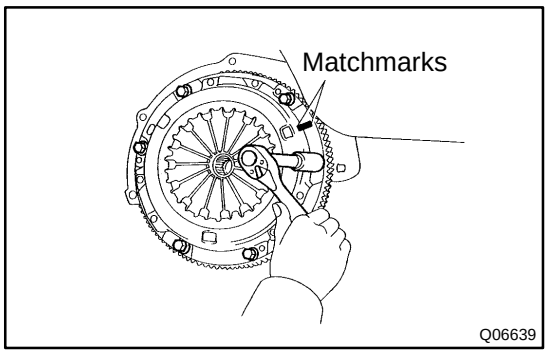

1. REMOVE TRANSMISSION FROM ENGINE

R150 (2WD): See page MT–3

R150F (4WD): See page MT–8

2. REMOVE CLUTCH COVER AND CLUTCH DISC

(a) Place matchmarks on the flywheel and clutch cover.

(b) Loosen each set bolt one turn at a time until spring tension is released.

(c) Remove the set bolts, and pull off the clutch cover with the clutch disc.

NOTICE:

Do not drop the clutch disc.

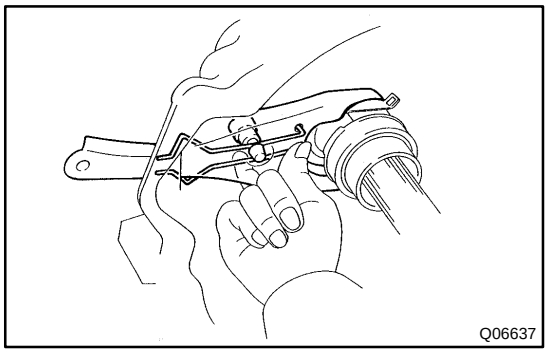

3. REMOVE BOOT, CLUTCH RELEASE BEARING AND CLUTCH RELEASE FORK FROM TRANSMISSION

(a) Remove the boot and release bearing together with the fork.

(b) Remove the clip from the release bearing.

CL02K–03

INSPECTION

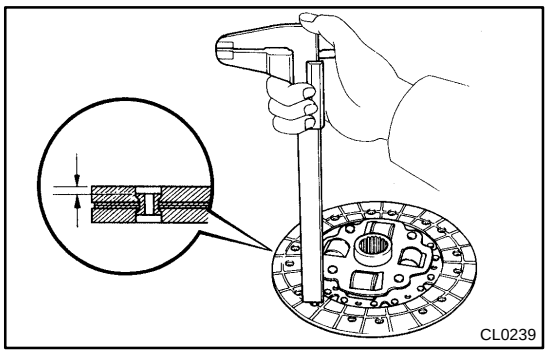

1. INSPECT CLUTCH DISC FOR WEAR OR DAMAGE

Using calipers, measure the rivet head depth.

Minimum rivet depth: 0.3 mm (0.012 in.)

If necessary, replace the clutch disc.

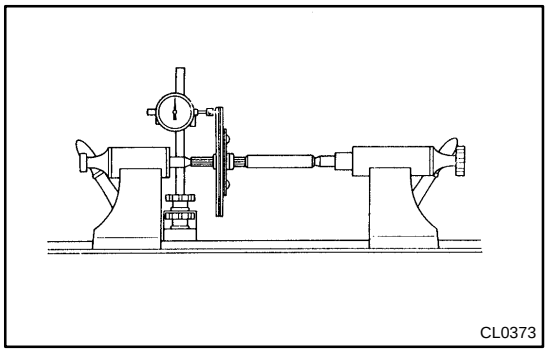

2. INSPECT CLUTCH DISC RUNOUT

Using a dial indicator, check the disc runout.

Maximum runout: 0.8 mm (0.031 in.)

If necessary, replace the clutch disc.

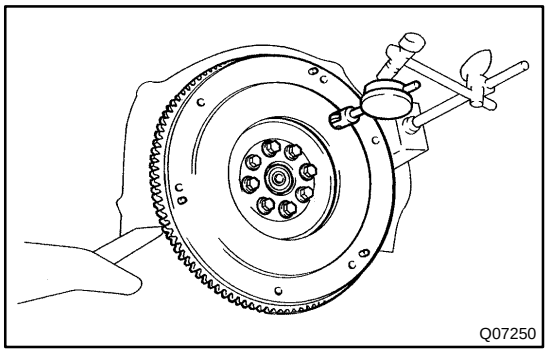

3. INSPECT FLYWHEEL RUNOUT

Using a dial indicator with roller instrument, check the flywheel runout.

Maximum runout: 0.1 mm (0.004 in.)

If necessary, replace the flywheel.

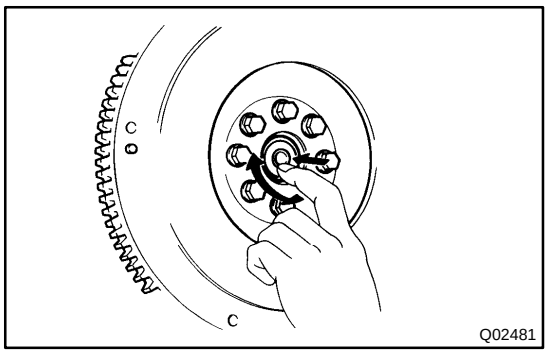

4. INSPECT PILOT BEARING

Turn the bearing by hand while applying force in the rotation direction.

If the bearing sticks or has much resistance, replace the pilot bearing.

HINT:

The bearing is permanently lubricated and requires no cleaning or lubrication.

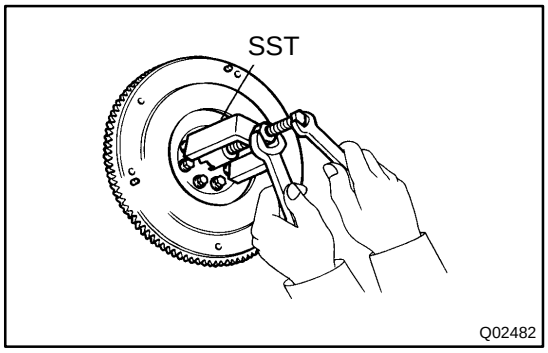

5. IF NECESSARY, REPLACE PILOT BEARING

(a) Remove the 2 bolts at diametrically opposite points.

(b) Using SST, remove the pilot bearing.

SST 09303–35011

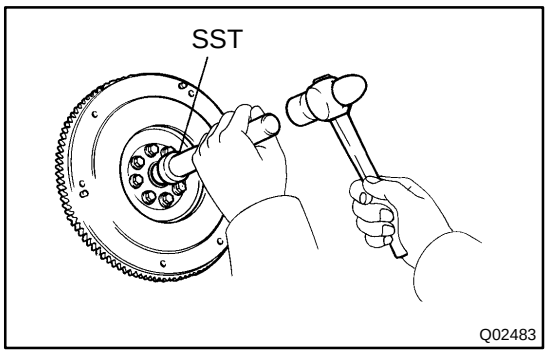

(c) Using SST and a hammer, install a new pilot bearing.
SST 09304–30012

HINT:
After assembling the pilot bearing to the hub, make sure that it rotates smoothly.

(d) Install and torque 2 new bolts.
Torque: 85 N·m (850 kgf·cm, 63 ft·lbf)

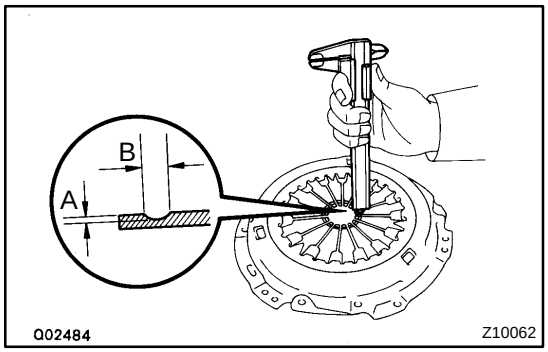

6. INSPECT DIAPHRAGM SPRING FOR WEAR

Using calipers, measure the diaphragm spring for depth and width of wear.

Maximum
Depth A: 0.6 mm (0.024 in.)
Width B: 5.0 mm (0.197 in.)

If necessary, replace the clutch cover.

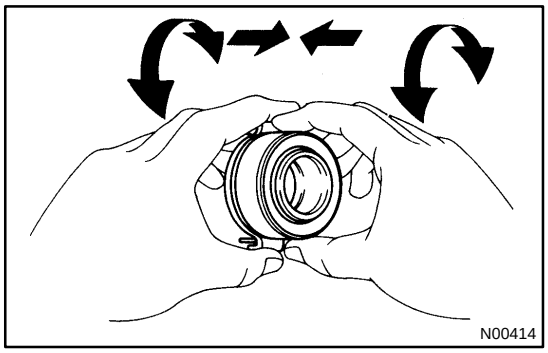

7. INSPECT CLUTCH RELEASE BEARING

Turn the bearing by hand while applying force in the axial direction.

HINT:
The bearing is permanently lubricated and requires no cleaning or lubrication.

If necessary, replace the release bearing.

CL02L–02

INSTALLATION

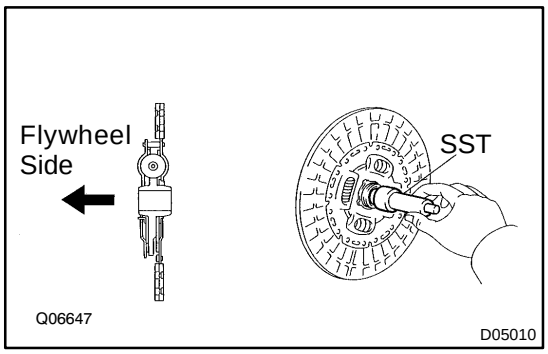

1. INSTALL CLUTCH DISC AND CLUTCH COVER ON FLYWHEEL

(a) Insert SST in the clutch disc, then insert them in the flywheel.

SST 09301–00110

HINT:

Take care not to insert the clutch disc in the wrong direction.

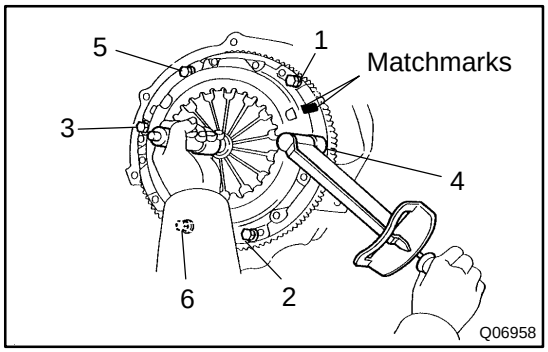

(b) Align the matchmarks on the clutch cover and flywheel.

(c) Following the procedures shown in the illustration, tighten the 6 bolts in the order starting from the bolt locating near the knock pin on the top.

Torque: 19 N·m (195 kgf·cm, 14 ft·lbf)

HINT:

▲ Following the order in the illustration, tighten the bolts at a time evenly.

▲ Shake SST up and down, right and left lightly, after checking that the disc is in the center, tighten the bolts.

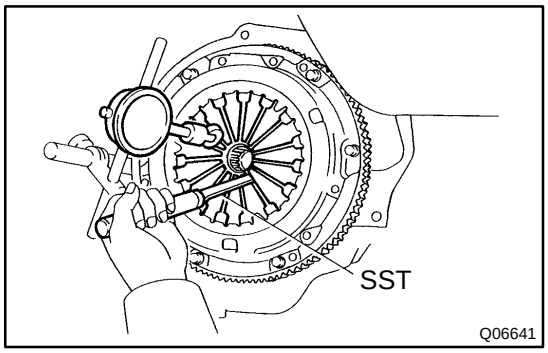

2. CHECK DIAPHRAGM SPRING TIP ALIGNMENT

Using a dial indicator with roller instrument, check the diaphragm spring tip alignment.

Maximum non–alignment: 0.5 mm (0.020 in.)

If alignment is not as specified value, using SST, adjust the diaphragm spring tip alignment.

SST 09333–00013

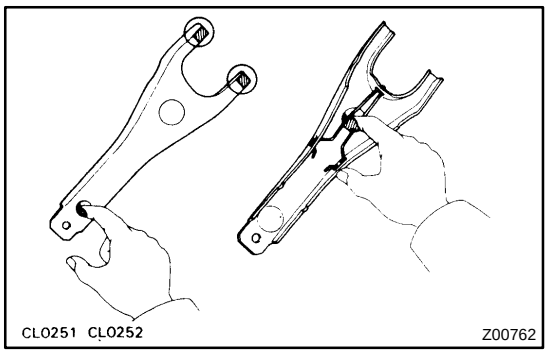

3. APPLY RELEASE HUB GREASE

Apply release hub grease to the release fork and hub contact, release fork and push rod contact and release fork pivot points.

Sealant:

Part No. 08887–01806, RELEASE HUB GREASE or equivalent

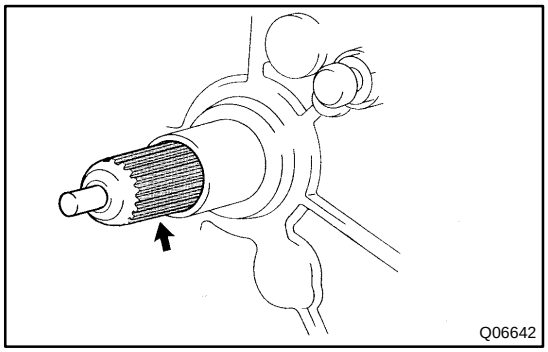

4. APPLY CLUTCH SPRING GREASE

Apply clutch spline grease to the input shaft spline.

Sealant:

Part No. 08887–01706, CLUTCH SPLINE GREASE or equivalent

5. INSTALL BOOT, CLUTCH RELEASE BEARING AND CLUTCH RELEASE FORK TO TRANSMISSION

(a) Install the clip to the release bearing.

(b) Install the boot and release bearing to the release fork, and then install them to the transmission.

6. INSTALL TRANSMISSION TO ENGINE
R150 (2WD): See page MT–6
R150F (4WD): See page MT–11

COOLANT

CO05O–02

INSPECTION

HINT:

Check the coolant level when the engine is cold.

1. CHECK ENGINE COOLANT LEVEL AT RADIATOR RESERVOIR

The engine coolant level should be between the ”LOW” and ”FULL” lines at normal temperature (20˚C(68˚F)).

If low, check for leaks and add ”TOYOTA Long Llife Coolant” or equivalent up to the ”FULL” line.

2. CHECK ENGINE COOLANT QUALITY

(a) Remove the radiator cap.

CAUTION:

To avoid the danger of being burned, do not remove the radiator cap while the engine and radiator are still hot, as fluid and steam can be blown out under pressure.

(b) There should not be any excessive deposits of rust or scale around the radiator cap or radiator filler hole, and the coolant should be free from oil.

If excessively dirty, clean the coolant passages and replace the coolant.

(c) Reinstall the radiator cap.

CO05P–05

REPLACEMENT

1. DRAIN ENGINE COOLANT

(a) Remove the radiator cap.

CAUTION:

To avoid the danger of being burned, do not remove the radiator cap while the engine and radiator are still hot, as fluid and steam can be blown out under pressure.

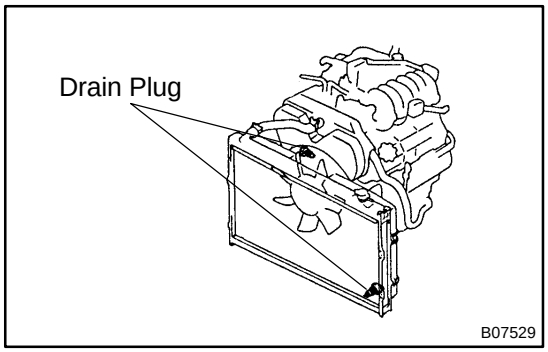

(b) Loosen the drain plugs, and drain the coolant.

(c) Close the drain plugs.

Torque:

30 N·m (300 kgf·cm, 22 ft·lbf) for engine drain plug

2. FILL WITH ENGINE COOLANT

(a) Slowly fill the system with engine coolant.

- ▲ Use of improper coolants may damage engine cooling system.
- ▲ Use ”TOYOTA Long Life Coolant” or equivalent and mix it with plain water according to the manufacturer’s directions.
- ▲ Use of the coolant which includes more than 50% [freezing protection down to –35˚C (–31˚F)] or 60% [freezing protection down to –50˚C (–58˚F)] of ethylene–glycol is recommended, but not more than 70%.

NOTICE:

- ▲ **Do not use an alcohol type coolant or plain water alone.**
- ▲ **The engine coolant should be mixed with plain water (preferably demineralized water or distilled water).**

Capacity:

A/T	9.9 liters (10.5 US qts, 8.7 Imp. qts)
M/T	10.0 liters (10.6 US qts, 8.8 Imp. qts)

(b) Reinstall the radiator cap.

(c) Start the engine, and bleed the cooling system.

(d) If necessary, refill engine coolant into the reservoir until it is ”FULL” line.

3. CHECK FOR ENGINE COOLANT LEAKS

4. CHECK ENGINE COOLANT SPECIFIC GRAVITY CORRECTLY

WATER PUMP

COMPONENTS

CO0UR–03

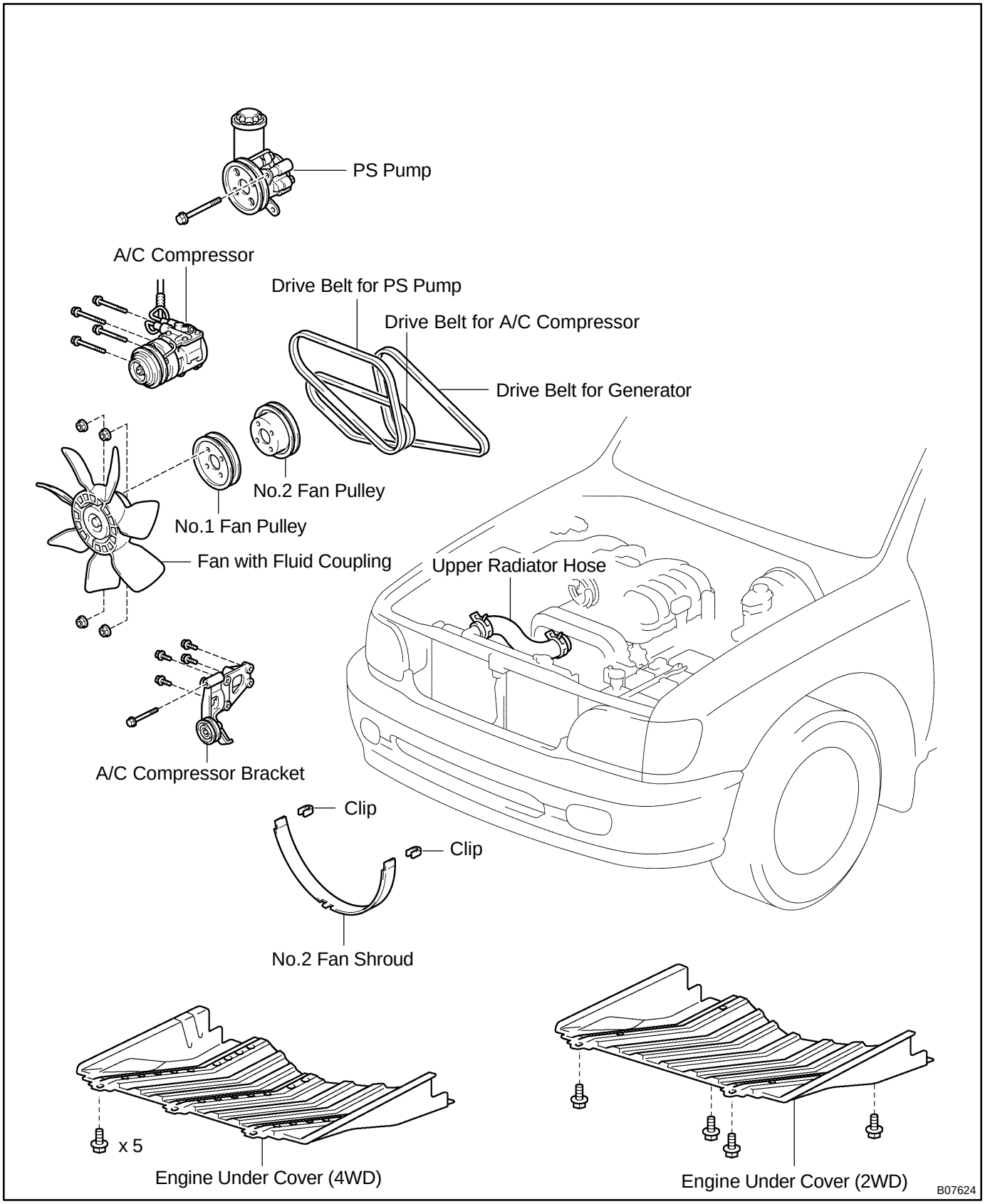

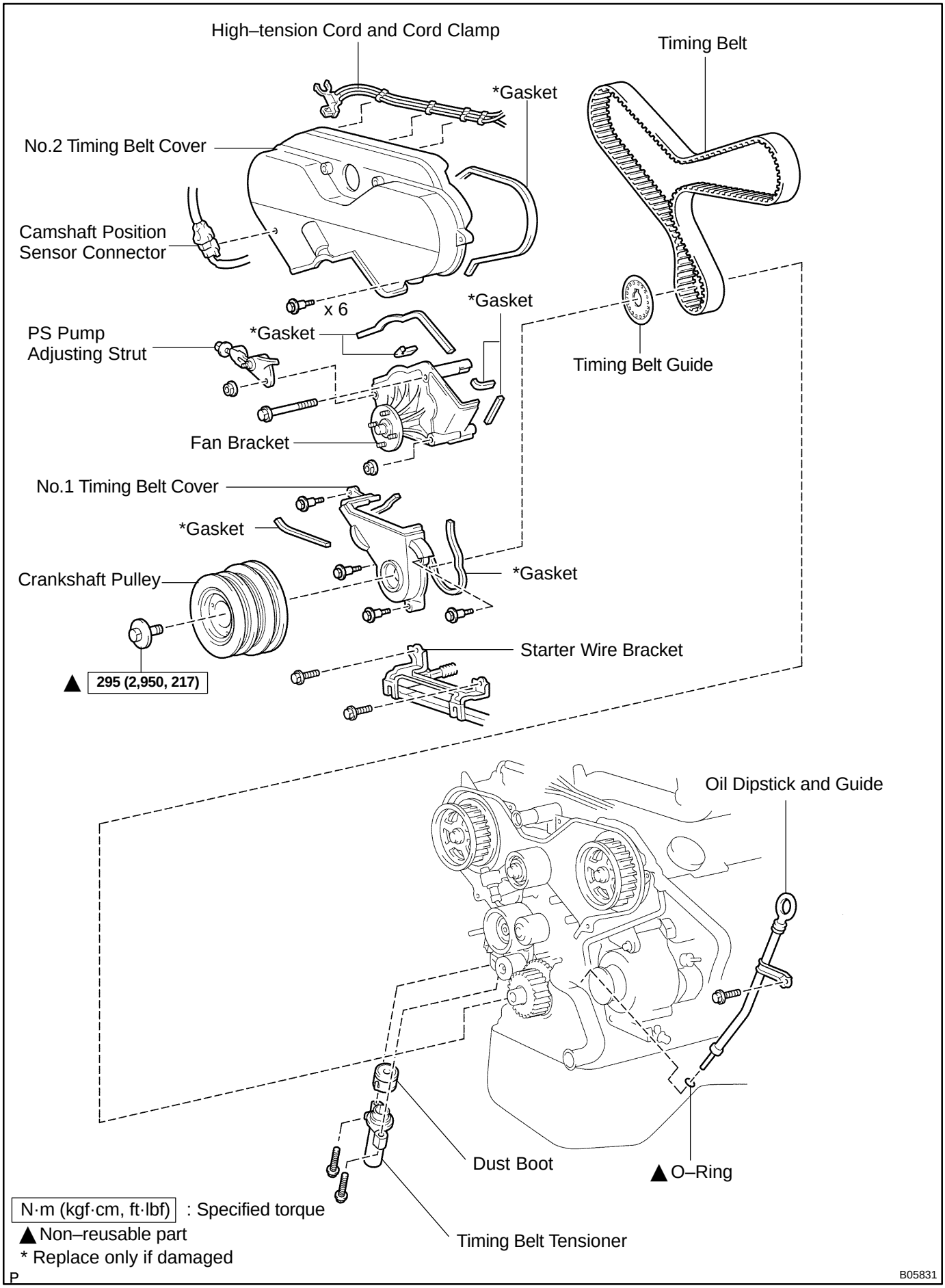
High–tension Cord and Cord Clamp
Timing Belt
*Gasket
No.2 Timing Belt Cover
Camshaft Position Sensor Connector
x 6
*Gasket
*Gasket
PS Pump Adjusting Strut
Timing Belt Guide
Fan Bracket
No.1 Timing Belt Cover
*Gasket
*Gasket
Crankshaft Pulley
Starter Wire Bracket
▲ 295 (2,950, 217)
Oil Dipstick and Guide
Dust Boot
▲O–Ring
Timing Belt Tensioner
N·m (kgf·cm, ft·lbf) : Specified torque
▲Non–reusable part
* Replace only if damaged
P
B05831

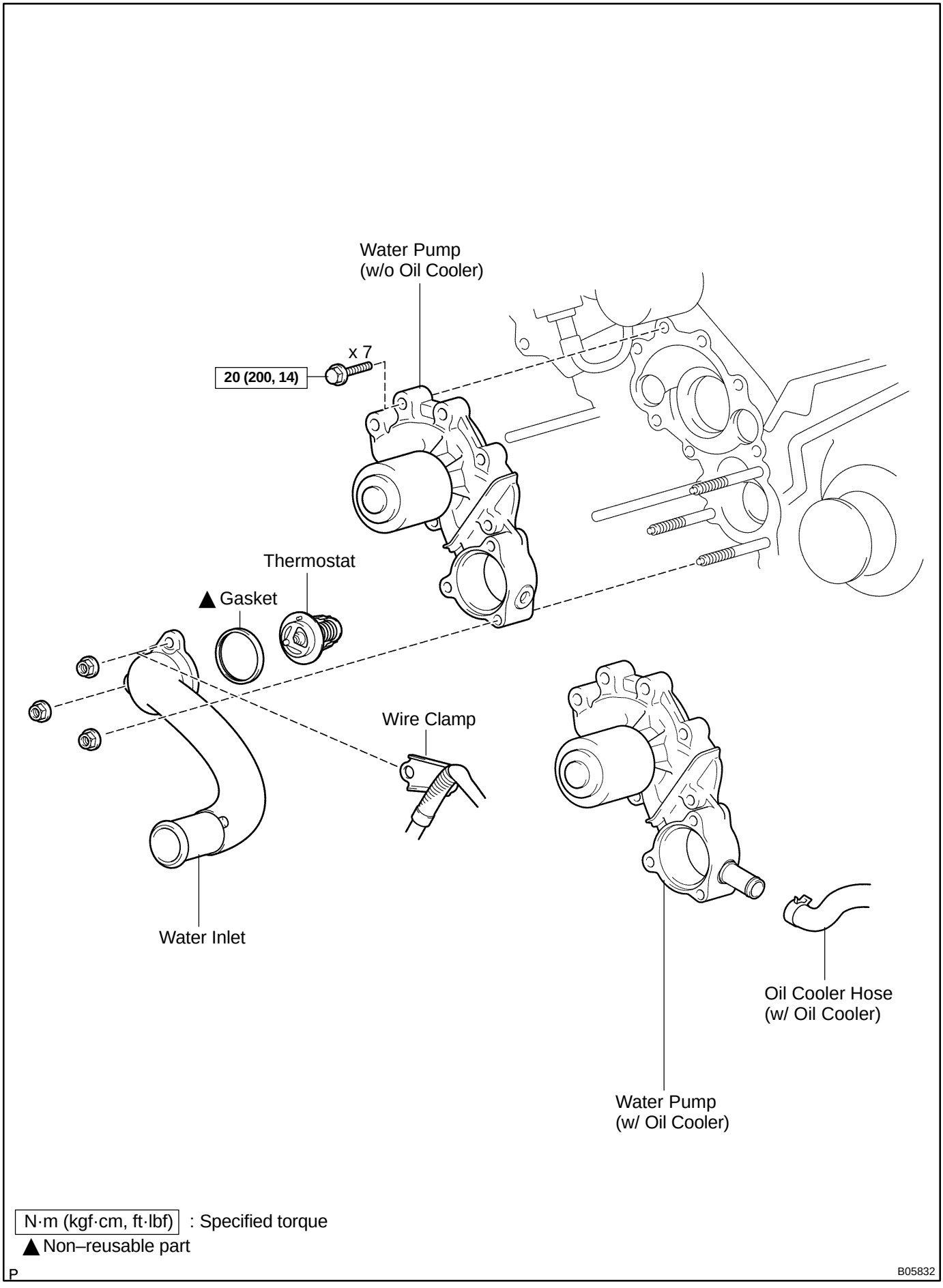
Water Pump
(w/o Oil Cooler)
x 7
20 (200, 14)
Thermostat
▲ Gasket
Wire Clamp
Water Inlet
Oil Cooler Hose
(w/ Oil Cooler)
Water Pump
(w/ Oil Cooler)
N·m (kgf·cm, ft·lbf) : Specified torque
▲ Non–reusable part
P
B05832

CO05R–04

REMOVAL

1. REMOVE OIL DIPSTICK AND GUIDE

(a) Remove the bolt, oil dipstick and guide.

(b) Remove the O–ring from the oil dipstick guide.

2. REMOVE TIMING BELT (See page EM–14)

3. REMOVE WATER INLET AND THERMOSTAT

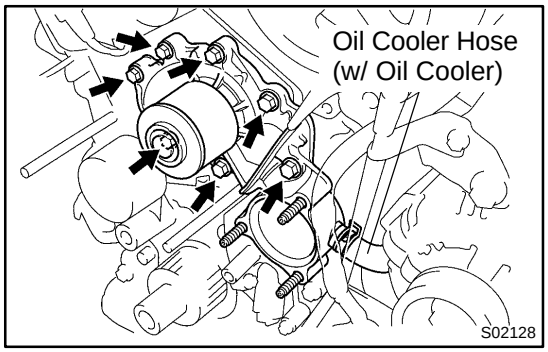

4. w/ Oil Cooler:
DISCONNECT OIL COOLER HOSE FROM WATER PUMP

5. REMOVE WATER PUMP

Remove the 7 bolts and water pump.

CO0US–02

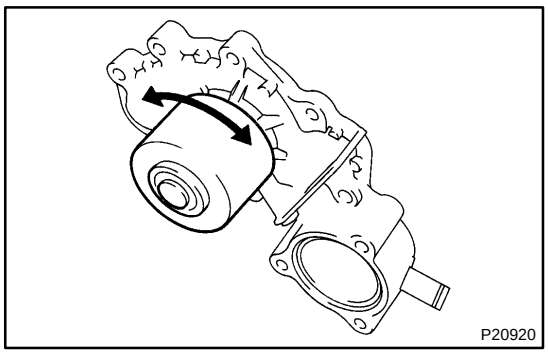

INSPECTION

1. INSPECT WATER PUMP

(a) Visually check the air hole and water hole for coolant leakage.

If leakage is found, replace the water pump.

If engine coolant has leaked onto the timing belt, replace the timing belt.

(b) Turn the pulley, and check that the water pump bearing moves smoothly and quietly.

If necessary, replace the water pump.

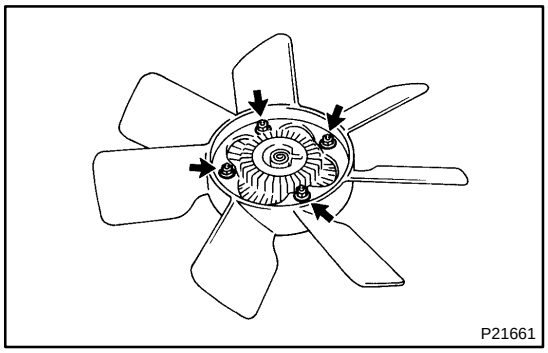

2. INSPECT FLUID COUPLING

(a) Remove the 4 nuts and fan from the fluid coupling.

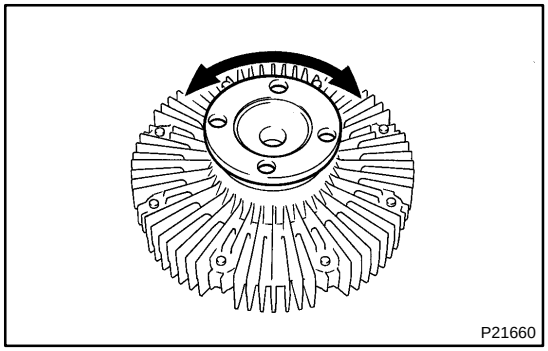

(b) Check that the fluid coupling is not damaged and that no silicon oil leaks.

If necessary, replace the fluid coupling.

(c) Reinstall the fan to the fluid coupling with the 4 nuts.

Torque: 5.4 N·m (55 kgf·cm, 47 in.·lbf)

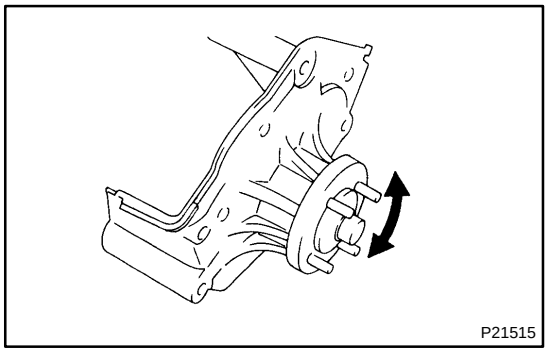

3. INSPECT FAN PULLEY BRACKET

Check the turning smoothness of the fan pulley.

If necessary, replace the pulley bracket.

4. INSPECT TIMING BELT COMPONENTS

(See page EM–18)

CO0UT–02

INSTALLATION

1. INSTALL WATER PUMP

(a) Remove any old packing (FIPG) material and be careful not to drop any oil on the contact surfaces of the water pump and cylinder block.

- ▲ Using a razor blade and gasket scraper, remove all the old packing (FIPG) material from the gasket surfaces and sealing groove.
- ▲ Thoroughly clean all components to remove all the loose material.
- ▲ Using a non–residue solvent, clean both sealing surfaces.

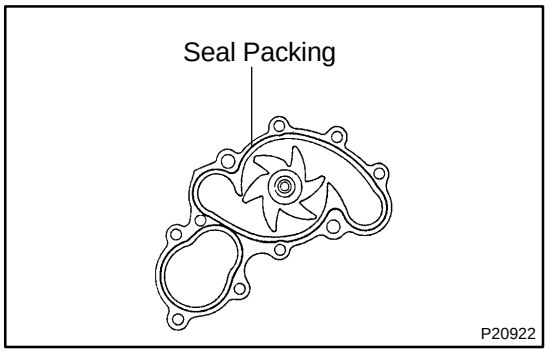

(b) Apply seal packing to the water pump grooves.

Seal packing:

Part No. 08826–00100 or equivalent

- ▲ Install a nozzle that has been cut to a 2 – 3 mm (0.08 – 0.12 in.) opening.

NOTICE:

Avoid applying an excessive amount to the surface.

- ▲ Parts must be assembled within 5 minutes of application. Otherwise the material must be removed and reapplied.
- ▲ Immediately remove nozzle from the tube and reinstall cap.

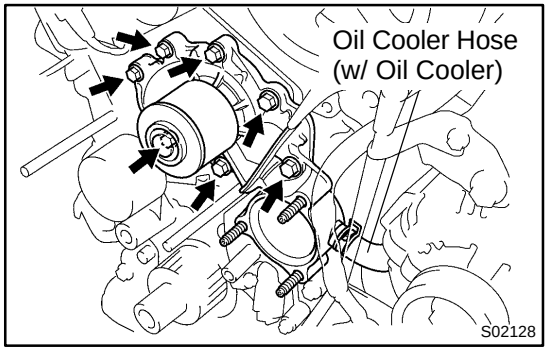

(c) Install the water pump with the 7 bolts.

Torque: 20 N·m (200 kgf·cm, 14 ft·lbf)

2. INSTALL THERMOSTAT AND WATER INLET (See page CO–13)

3. w/ Oil Cooler:
CONNECT OIL COOLER HOSE TO WATER PUMP

4. INSTALL TIMING BELT (See page EM–20)

5. INSTALL OIL DIPSTICK AND GUIDE

(a) Install a new O–ring to the oil dipstick guide.

(b) Apply soapy water to the O–ring.

(c) Push in the oil dipstick guide end into the guide hole of the oil pump.

(d) Install the oil dipstick guide to the generator bracket with the bolt.

Torque: 8 N·m (80 kgf·cm, 70 in.·lbf)

THERMOSTAT

COMPONENTS

CO05U–03

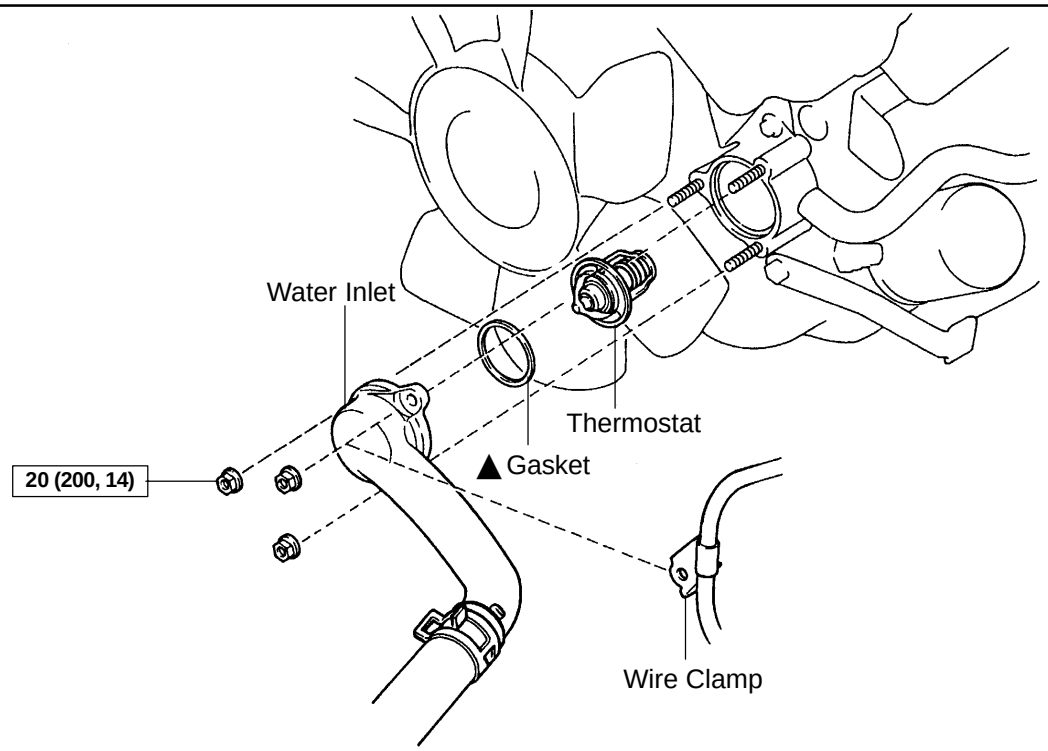

N·m(kgf·cm, ft·lbf) : Specified torque

▲ Non–Reusable part

B07457

CO05V–04

REMOVAL

HINT:

Removal of the thermostat would have an adverse effect, causing a lowering of cooling efficiency. Do not remove the thermostat, even if the engine tends to overheat.

1. DRAIN ENGINE COOLANT

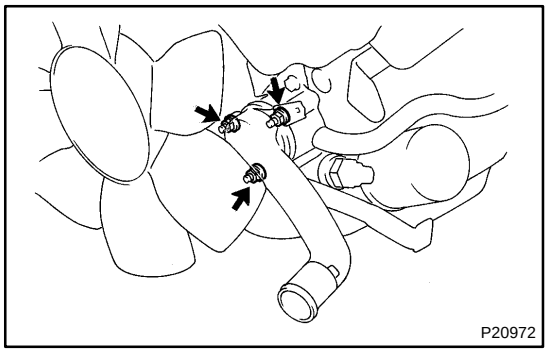

2. REMOVE THERMOSTAT

(a) Remove the 3 nuts, wire clamp, water inlet and thermostat from the water pump.

(b) Remove the gasket from the thermostat.

CO05W–04

INSPECTION

INSPECT THERMOSTAT

HINT:

The thermostat is numbered with the valve opening temperature.

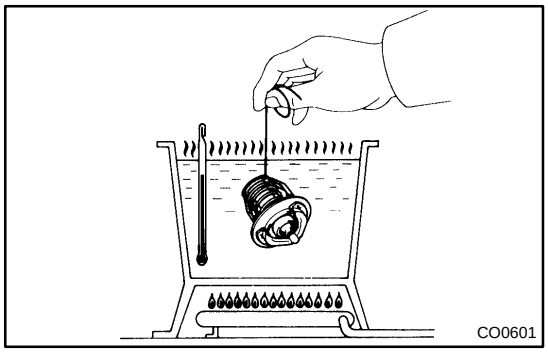

(a) Immerse the thermostat in water and gradually heat the water.

(b) Check the valve opening temperature.

Valve opening temperature: 80 – 84˚C (176 – 183˚F)

If the valve opening temperature is not as specified, replace the thermostat.

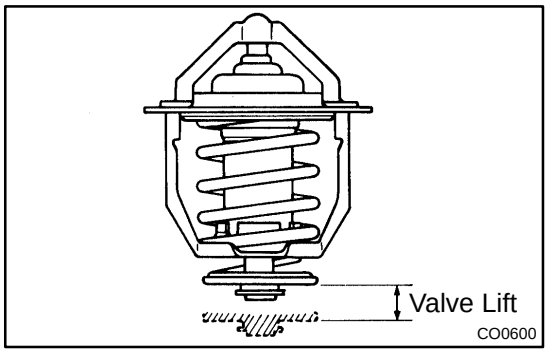

(c) Check the valve lift.

Valve lift: 8.5 mm (0.335 in.) or more at 95˚C (203˚F)

If the valve lift is not as specified, replace the thermostat.

(d) Check that the valve is fully closed when the thermostat is at low temperatures (below 40˚C (104˚F)).

If not closed, replace the thermostat.

CO05X–03

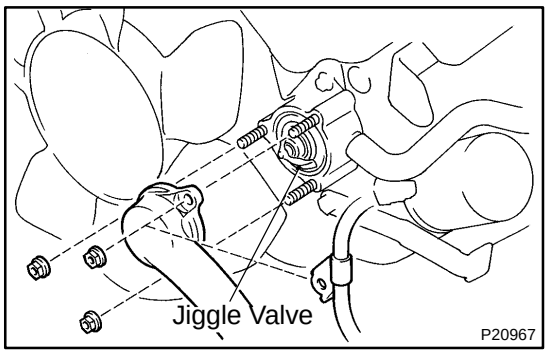

INSTALLATION

1. INSTALL THERMOSTAT

(a) Place a new gasket to the thermostat.

(b) Install the thermostat with the jiggle valve downward.

(c) Install the water inlet with the 3 bolts.

Torque: 20 N·m (200 kgf·cm, 14 ft·lbf)

2. CONNECT LOWER RADIATOR HOSE

3. FILL WITH ENGINE COOLANT

4. START ENGINE AND CHECK FOR COOLANT LEAKS

5. RECHECK ENGINE COOLANT LEVEL

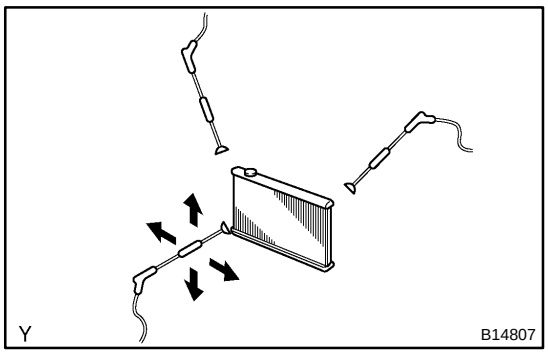

RADIATOR

CO1C5–01

ON–VEHICLE CLEANING

INSPECT FINS FOR BLOCKAGE

If fins are clogged, wash them with water or a steam cleaner and dry with compressed air.

NOTICE:

- **If the distance between the steam cleaner and the core is too close, there is a possibility of damaging the fin, so keep the following injection distance.**

Injection Pressure	Injection Distance
2,942 – 4,903 kPa (30 – 80 kgf·cm^2, 427 – 711 psi)	300 mm (11.811 in.)
4,903 – 7,845 kPa (50 – 80 kgf·cm^2, 711 – 1,138 psi)	500 mm (19.685 in.)

- **If the fins are bent, straighten them with a screwdriver or pliers.**
- **Never apply water directly onto the electronic components.**

CO05Z–04

ON–VEHICLE INSPECTION

1. REMOVE RADIATOR CAP

CAUTION:

To avoid the danger of being burned, do not remove the radiator cap while the engine and radiator are still hot, as fluid and steam can be blown out under pressure.

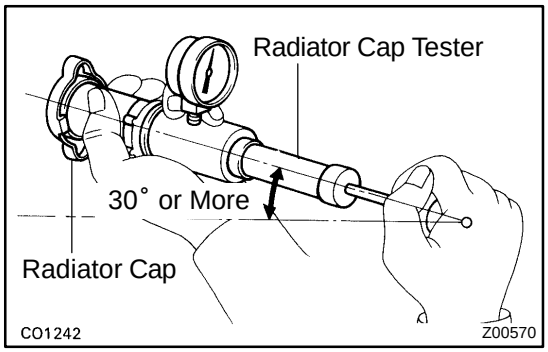

2. INSPECT RADIATOR CAP

NOTICE:

- **If the radiator cap has contaminations, always rinse it with water.**
- **Before using a radiator cap tester, wet the relief valve with engine coolant or water.**
- **When performing steps (a) and (b) below, keep the radiator cap tester at an angle of over 30° above the horizontal.**

(a) Using a radiator cap tester, slowly pump the tester and check that air is coming from the vacuum valve.

Pump speed: 1 push/(3 seconds or more)

NOTICE:

Push the pump at a constant speed.

If air is not coming from the vacuum valve, replace the radiator cap.

(b) Pump the tester and measure the relief valve opening pressure.

Pump speed: 1 push/within 1 second

NOTICE:

This pump speed is for the first pump only (in order to close the vacuum valve). After this, the pump speed can be reduced.

Opening pressure:

Standard	74 – 103 kPa (0.75 – 1.05 kgf/cm^2, 10.7 – 14.9 psi)
Minimum	59 kPa (0.6 kgf/cm^2, 8.6 psi)

HINT:

Use the tester's maximum reading as the opening pressure.

If the opening pressure is less than minimum, replace the radiator cap.

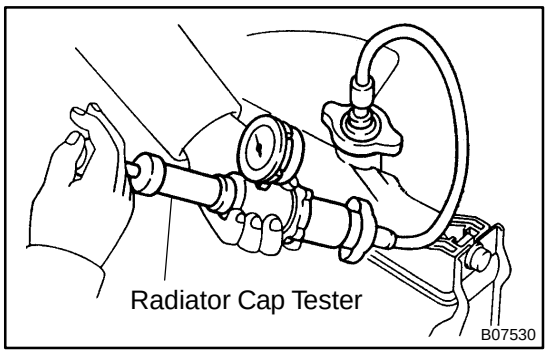

3. INSPECT COOLING SYSTEM FOR LEAKS

(a) Fill the radiator with coolant and attach a radiator cap tester.

(b) Warm up the engine.

(c) Pump it to 118 kPa (1.2 kgf/cm^2, 17.1 psi), and check that the pressure does not drop.

If the pressure drops, check the hoses, radiator or water pump for leaks.

If no external leaks are found, check the heater core, cylinder block and head.

4. REINSTALL RADIATOR CAP

CO060–03

COMPONENTS

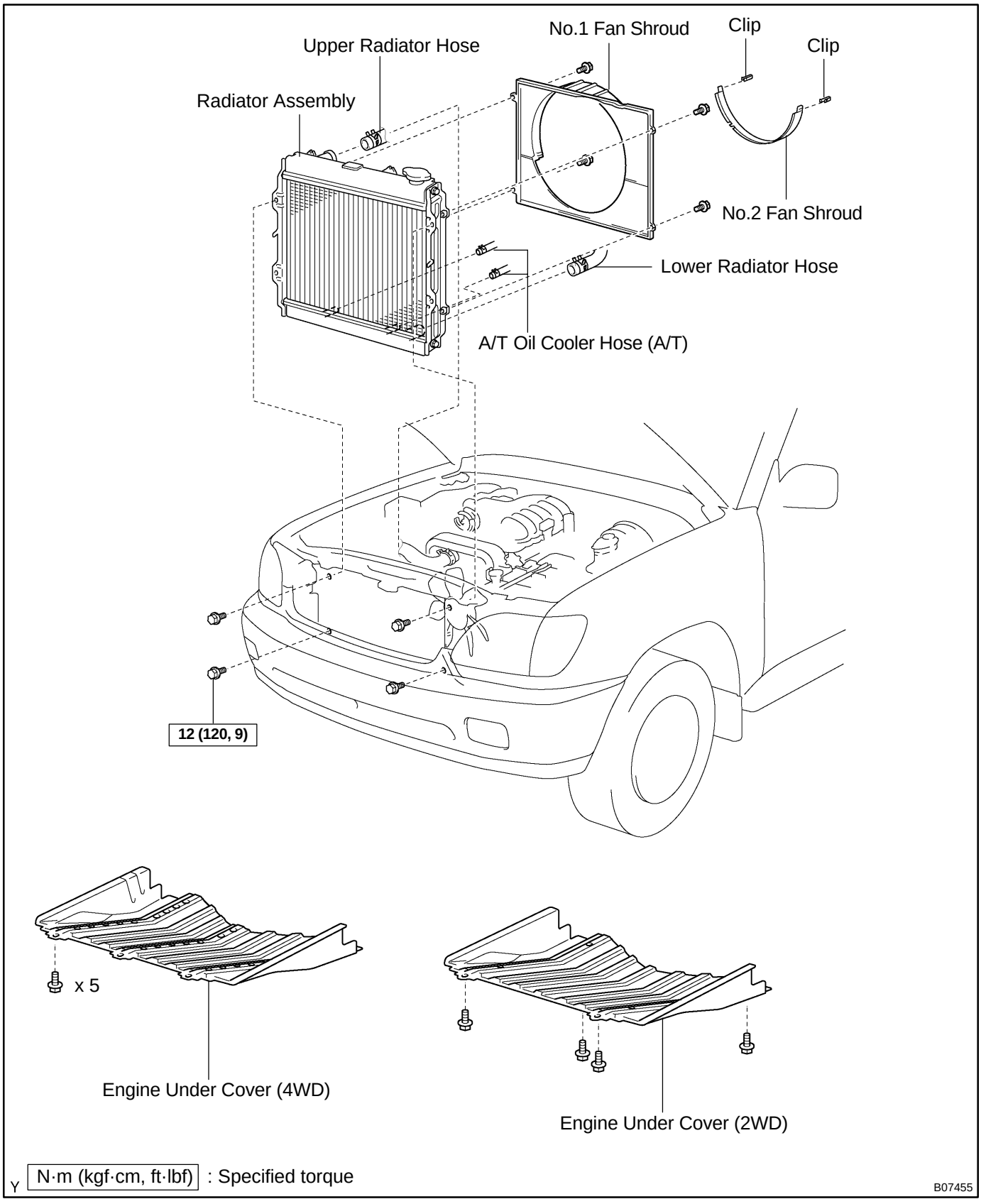

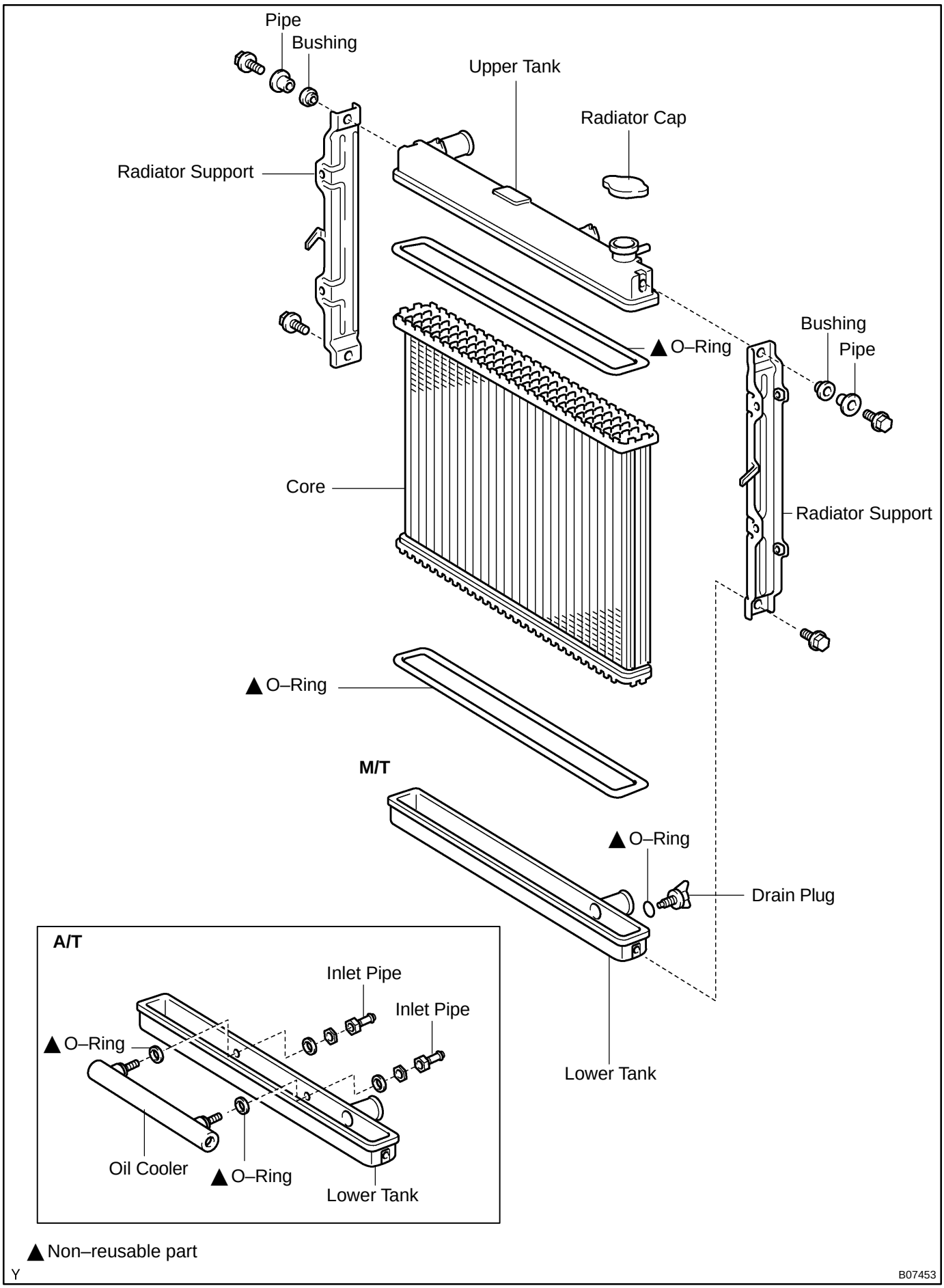
Pipe
Bushing
Upper Tank
Radiator Cap
Radiator Support
▲ O–Ring
Bushing
Pipe
Core
Radiator Support
▲ O–Ring
M/T
▲ O–Ring
Drain Plug
Lower Tank
A/T
Inlet Pipe
Inlet Pipe
▲ O–Ring
Oil Cooler
▲ O–Ring
Lower Tank
▲ Non–reusable part
Y
B07453

CO0UN–02

REMOVAL

1. **REMOVE ENGINE UNDER COVER**
2. **DRAIN ENGINE COOLANT**
3. **DISCONNECT RADIATOR RESERVOIR HOSE FROM RADIATOR**
4. **DISCONNECT UPPER RADIATOR HOSE FROM RADIATOR**
5. **DISCONNECT LOWER RADIATOR HOSE FROM RADIATOR**
6. **A/T:**
   DISCONNECT A/T OIL COOLER HOSES FROM RADIATOR
7. **REMOVE NO.2 FAN SHROUD**

Remove the 2 clips and No.2 fan shroud.

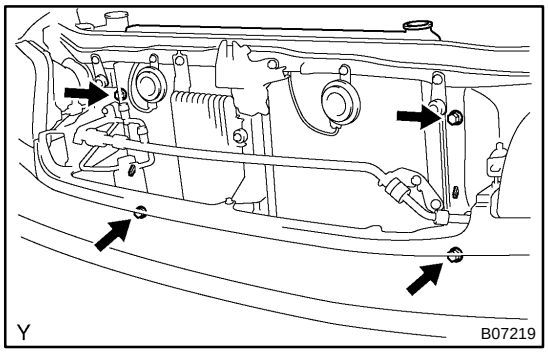

8. **REMOVE RADIATOR ASSEMBLY**

Remove the 4 bolts and radiator assembly.

9. **REMOVE NO.1 FAN SHROUD**

Remove the 4 bolts and No.1 fan shroud.

CO0UO–02

DISASSEMBLY

1. REMOVE RADIATOR SUPPORTS

Remove the 4 bolts, 2 pipes, 2 bushings and 2 radiator supports.

2. REMOVE RADIATOR CAP

3. REMOVE DRAIN PLUG

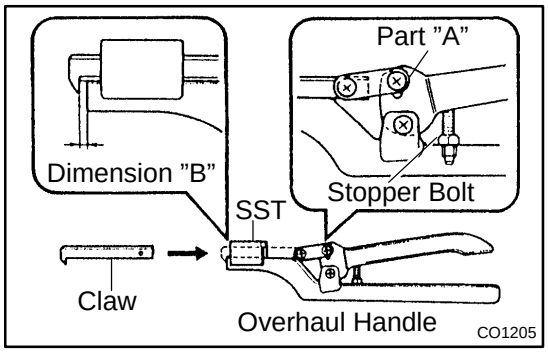

4. ASSEMBLE SST

SST 09230–01010

(a) Install the claw to the overhaul handle, inserting it in the hole in part ”A” as shown in the diagram.

(b) While gripping the handle, adjust the stopper bolt so that dimension ”B” shown in the diagram is 0.2 – 0.3 mm (0.008 – 0.012 in.).

NOTICE:

If this adjustment is not done, the claw may be damaged.

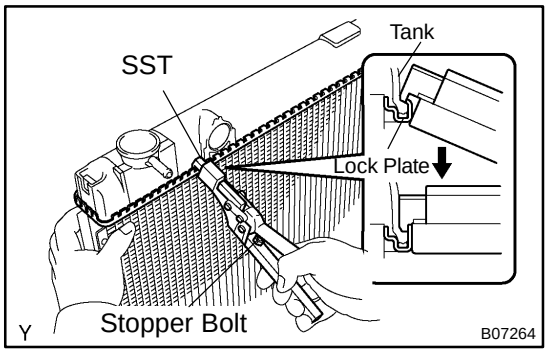

5. UNCAULK LOCK PLATES

Using SST to release the caulking, squeeze the handle until stopped by the stopper bolt.

SST 09230–01010

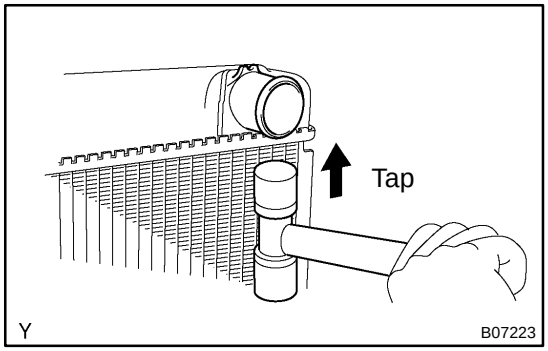

6. REMOVE TANKS AND O–RINGS

(a) Lightly tap the radiator port (inlet or outlet) with a soft–faced hammer, and remove the tank.

(b) Remove the O–ring.

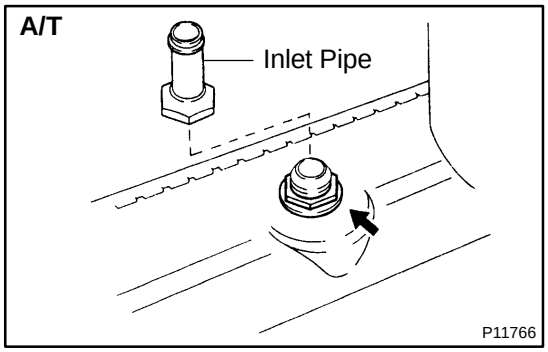

7. A/T:

REMOVE OIL COOLER FROM LOWER TANK

(a) Remove the 2 inlet pipes.

(b) Remove the 2 nuts, 2 plate washers and oil cooler.

(c) Remove the 2 O–rings from the oil cooler.

CO0UP–02

REASSEMBLY

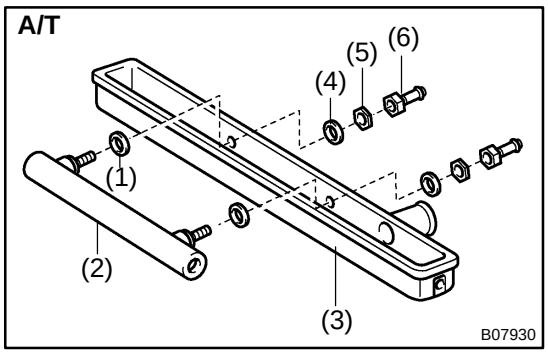

1. A/T:

INSTALL OIL COOLER TO LOWER TANK

(a) Clean the O–ring contact surface of the lower tank and oil cooler.

(b) Install 2 new O–rings (1) to the oil cooler (2).

(c) Install the oil cooler (2) to the lower tank (3).

(d) Install the 2 plate washers (4) with the 2 nuts (5).
Torque: 8.3 N·m (85 kgf·cm, 74 in.·lbf)

(e) Install the 2 inlet pipes (6).
Torque: 15 N·m (150 kgf·cm, 11 ft·lbf)

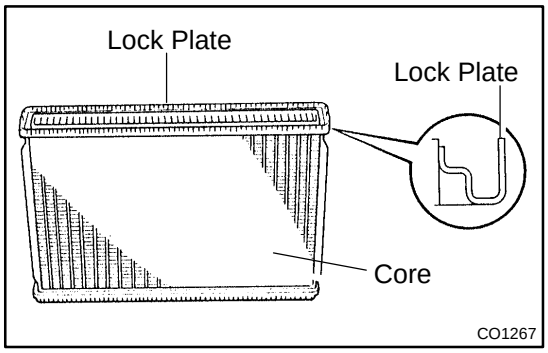

2. INSPECT LOCK PLATE

Inspect the lock plate for damage.

HINT:

▲ If the sides of the lock plate groove are deformed, reassembly of the tank will be impossible.

▲ Therefore, first correct any deformation with pliers or similar object. Water leakage will result if the bottom of the lock plate groove is damaged or dented. Therefore, repair or replace if necessary.

NOTICE:

The radiator can only be recaulked 2 times.
After the 2nd time, the radiator core must be replaced.

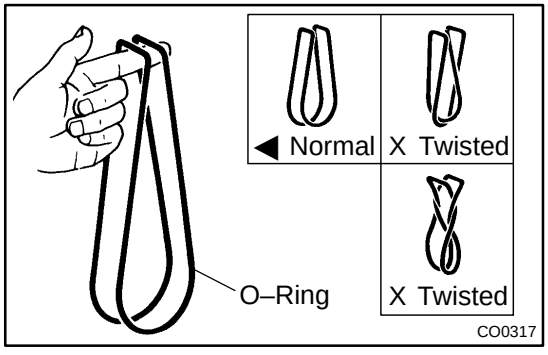

3. INSTALL NEW O–RINGS AND TANKS

(a) After checking that there are no foreign objects in the lock plate groove, install the new O–ring without twisting it.

HINT:

When cleaning the lock plate groove, lightly rub it with sand paper without scratching it.

(b) Install the tank without damaging the O–ring.

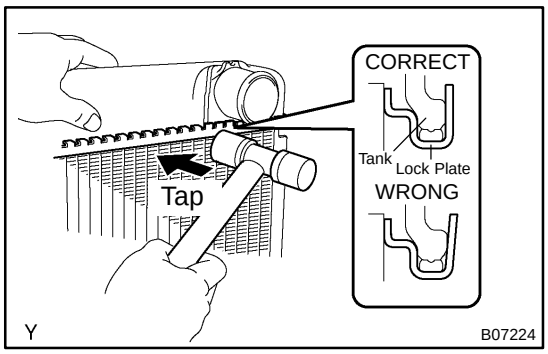

(c) Tap the lock plate with a soft–faced hammer so that there is no gap between it and the tank.

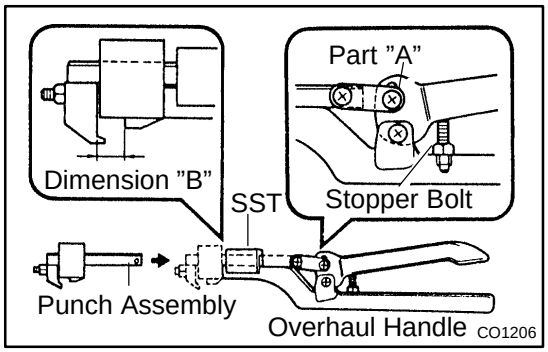

4. ASSEMBLE SST

SST 09230–01010, 09231–14010

(a) Install the punch assembly to the overhaul handle, inserting it in the hole in part ”A” as shown in the illustration.

(b) While gripping the handle, adjust the stopper bolt so that dimension ”B” shown in the diagram.

Dimension ”B”: 8.4 mm (0.34 in.)

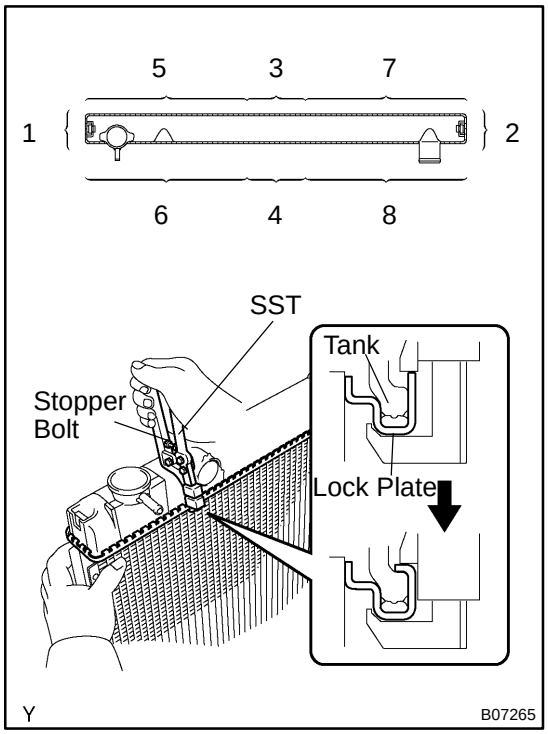

5. CAULK LOCK PLATE

(a) Lightly press SST against the lock plate in the order shown in the illustration. After repeating this a few times, fully caulk the lock plate by squeezing the handle until stopped by the stopper bolt.

SST 09230–01010

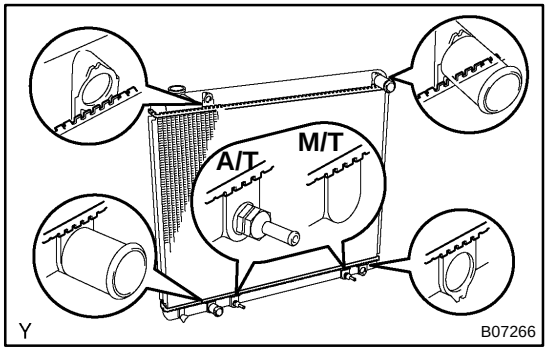

HINT:

▲ Do not stake the areas protruding around the ports and flanges.

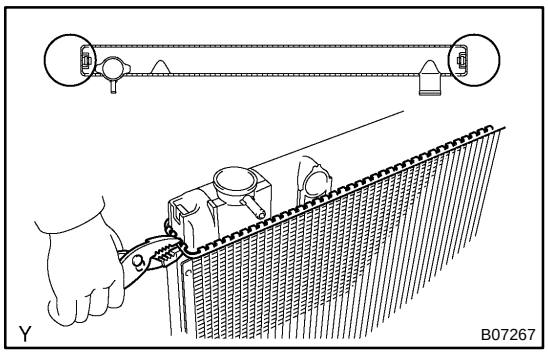

▲ The points shown in the rib sides near here cannot be staked with SST. Use pliers or similar object and be careful not to damage the core plates.

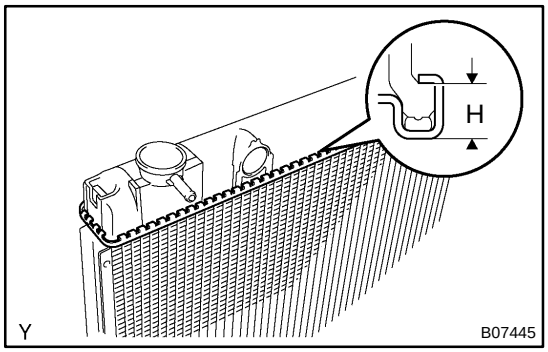

(b) Check the lock plate height (H) after completing the caulking.

Plate height (H): 7.4 – 7.8 mm (0.2959 – 0.3119 in.)

If not within the specified height, adjust the stopper bolt of the handle again and caulk again.

6. INSTALL DRAIN PLUG

(a) Install a new O–ring to the drain plug.
(b) Apply soapy water to the O–ring.
(c) Install the drain plug.

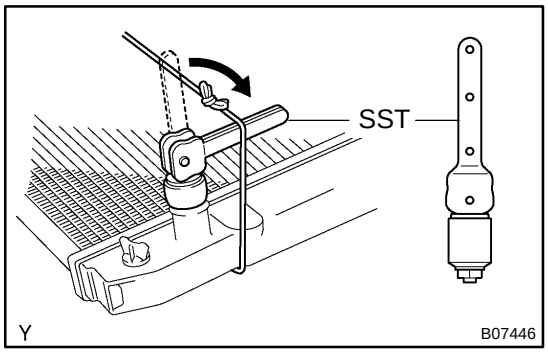

7. CHECK FOR WATER LEAKS

(a) Using SST, plug the inlet and outlet pipes of the radiator.
SST 09230–01010
(b) Using a radiator cap tester, apply pressure to the radiator.
Test pressure: 147 kPa (1.5 kgf/cm^2, 21 psi)

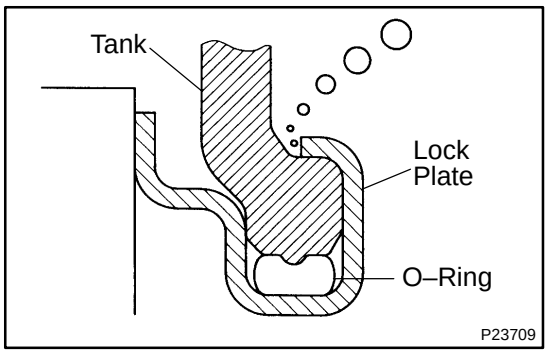

(c) Check for water leaks.

HINT:

On radiators with resin tanks, there is a clearance between the core plate and tank plate where a minute amount of air will remain, giving the appearance of an air leak when the radiator is submerged in water. Therefore, before performing the water leak test, first swirl the radiator around in the water until all air bubbles disappear.

8. INSTALL RADIATOR SUPPORTS

Install the 2 radiator supports, 2 bushings and 2 pipes with the 4 bolts.

Torque: 12.7 N·m (130 kgf·cm, 9 ft·lbf)

9. INSTALL RADIATOR CAP

CO0UQ–02

INSTALLATION

1. INSTALL NO.1 FAN SHROUD

Install the No.1 fan shroud with the 4 bolts.

Torque: 5 N·m (50 kgf·cm, 44 in.·lbf)

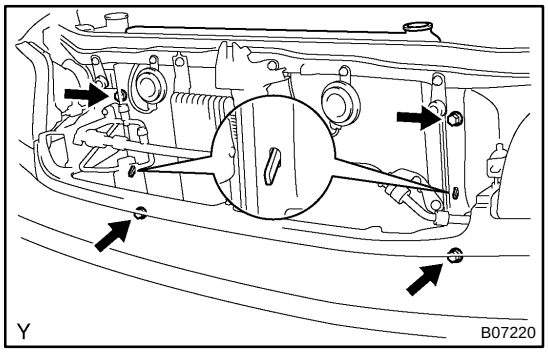

2. INSTALL RADIATOR ASSEMBLY

(a) Set the radiator bracket hooks to the radiator support holes.

(b) Install the 4 bolts.

Torque: 12 N·m (120 N·m, 9 ft·lbf)

3. INSTALL NO.2 FAN SHROUD

Install the No.2 fan shroud with the 2 clips.

4. A/T:
CONNECT A/T OIL COOLER HOSES TO RADIATOR

5. CONNECT UPPER RADIATOR HOSE TO RADIATOR

6. CONNECT LOWER RADIATOR HOSE TO RADIATOR

7. CONNECT RADIATOR RESERVOIR HOSE TO RADIATOR

8. FILL WITH ENGINE COOLANT

9. START ENGINE AND CHECK FOR ENGINE COOLANT LEAKS

10. RECHECK ENGINE COOLANT LEVEL

11. INSTALL ENGINE UNDER COVER

COOLANT

CO0IO–03

INSPECTION

HINT:

Check the coolant level when the engine is cold.

1. CHECK ENGINE COOLANT LEVEL AT RADIATOR RESERVOIR

The engine coolant level should be between the ”LOW” and ”FULL” lines at normal temperature (20˚C(68˚F)).

If low, check for leaks and add ”TOYOTA Long Llife Coolant” or equivalent up to the ”FULL” line.

2. CHECK ENGINE COOLANT QUALITY

(a) Remove the radiator cap.

CAUTION:

To avoid the danger of being burned, do not remove the radiator cap while the engine and radiator are still hot, as fluid and steam can be blown out under pressure.

(b) There should not be any excessive deposits of rust or scale around the radiator cap or radiator filler hole, and the coolant should be free from oil.

If excessively dirty, clean the coolant passages and replace the coolant.

(c) Reinstall the radiator cap.

CO0IP–09

REPLACEMENT

1. REMOVE ENGINE UNDER COVER

2. DRAIN ENGINE COOLANT

(a) Remove the radiator cap.

CAUTION:

To avoid the danger of being burned, do not remove the radiator cap while the engine and radiator are still hot, as fluid and steam can be blown out under pressure.

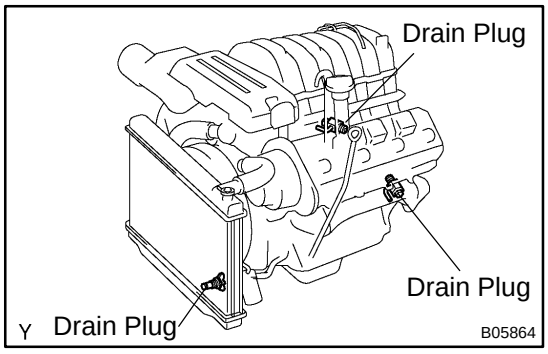

(b) Remove the 3 drain plugs on the engine and radiator, and drain the coolant.

(c) Close the 3 drain plugs.

Torque: 12.7 N·m (130 kgf·cm, 9 ft·lbf) for engine

3. REFILL WITH ENGINE COOLANT

(a) Slowly fill the system with coolant.

- ▲ Use of improper coolants may damage engine cooling system.
- ▲ Use "TOYOTA Long Life Coolant" or equivalent and mix it with plain water according to the manufacturer's directions.
- ▲ Use of the coolant which includes more than 50% [freezing protection down to –35˚C (–31˚F)] or 60% [freezing protection down to –50˚C (–58˚F)] of ethylene–glycol is recommended, but not more than 70%.

NOTICE:

- ▲ **Do not use an alcohol type coolant or plain water alone.**
- ▲ **The coolant should be mixed with plain water (preferably demineralized water or distilled water).**

Capacity: 11.6 liters (12.3 US qts, 10.2 Imp. qts)

(b) Install the radiator cap.

(c) Bleed the cooling system.

(1) Start the engine, and open the heater water valve.

(2) Maintain the engine speed at 2,000 – 2,500 rpm, and warm up the engine.

(d) Stop the engine, and wait until the engine coolant cools down.

(e) Refill coolant into the reservoir until it is "FULL".

4. CHECK FOR ENGINE COOLANT LEAKS

5. CHECK ENGINE COOLANT SPECIFIC GRAVITY CORRECTLY

6. REINSTALL ENGINE UNDER COVER

WATER PUMP

COMPONENTS

CO0IQ–09

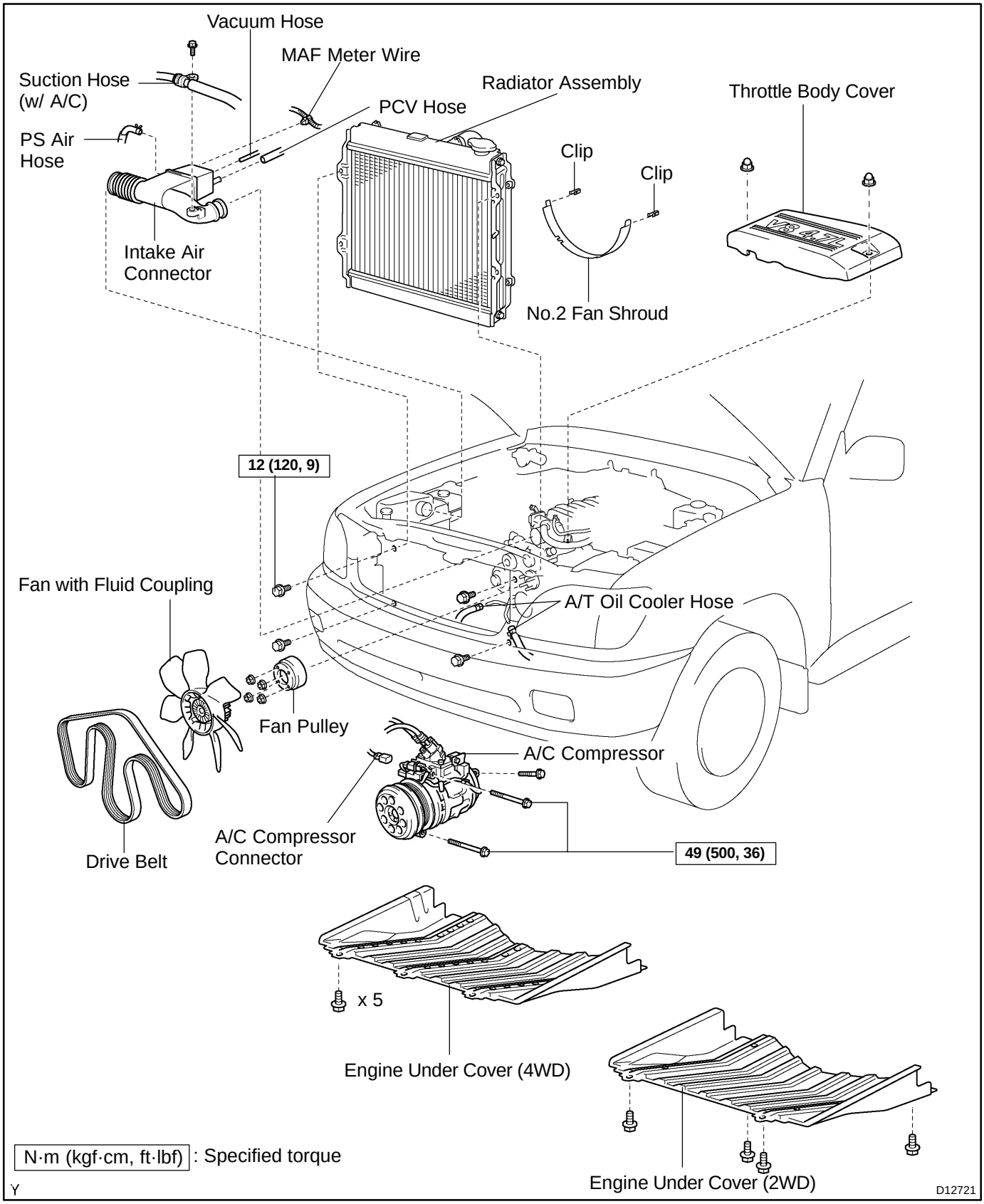

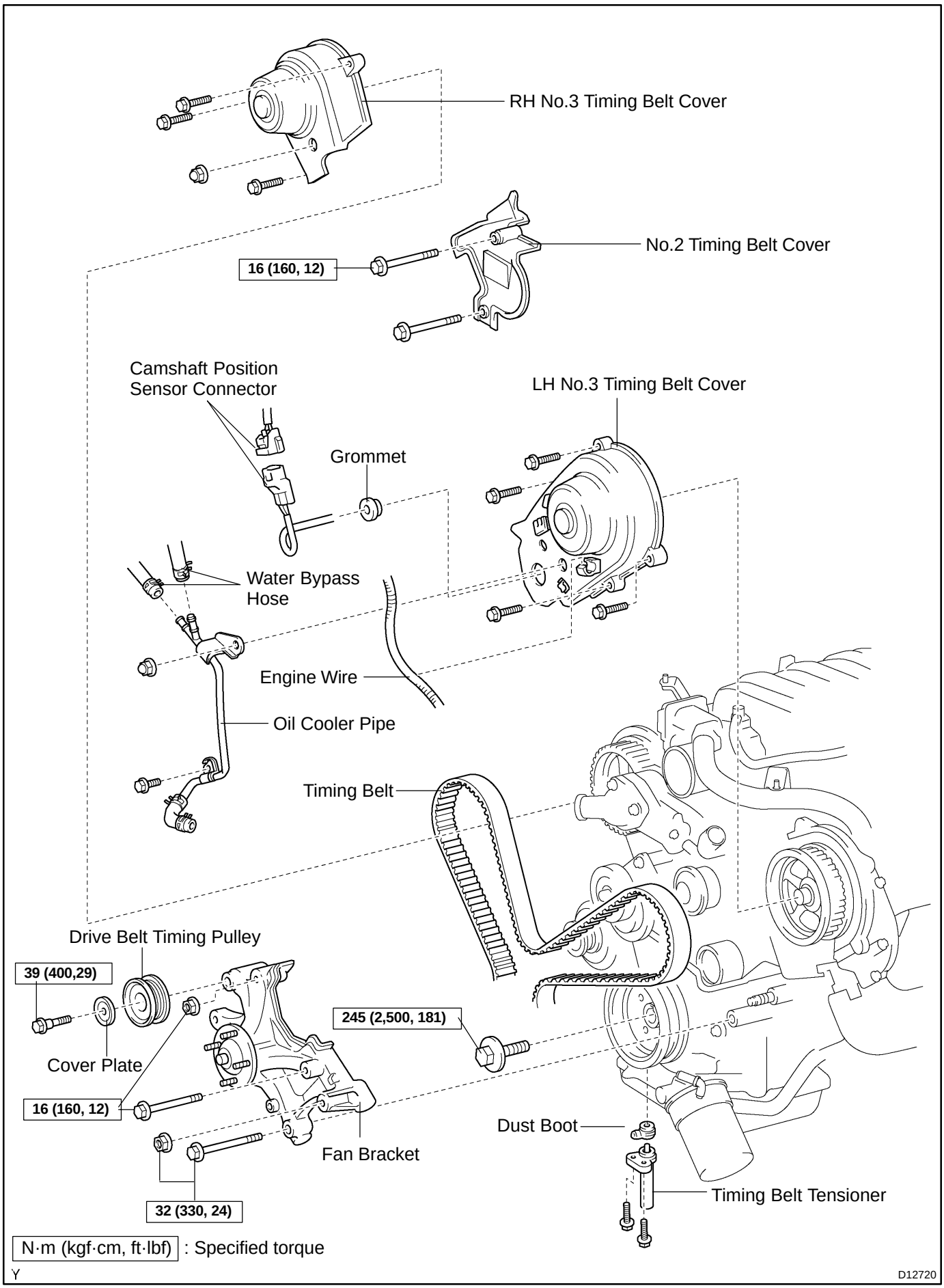
RH No.3 Timing Belt Cover
No.2 Timing Belt Cover
16 (160, 12)
Camshaft Position Sensor Connector
LH No.3 Timing Belt Cover
Grommet
Water Bypass Hose
Engine Wire
Oil Cooler Pipe
Timing Belt
Drive Belt Timing Pulley
39 (400,29)
245 (2,500, 181)
Cover Plate
16 (160, 12)
Dust Boot
Fan Bracket
Timing Belt Tensioner
32 (330, 24)
N·m (kgf·cm, ft·lbf) : Specified torque
Y
D12720

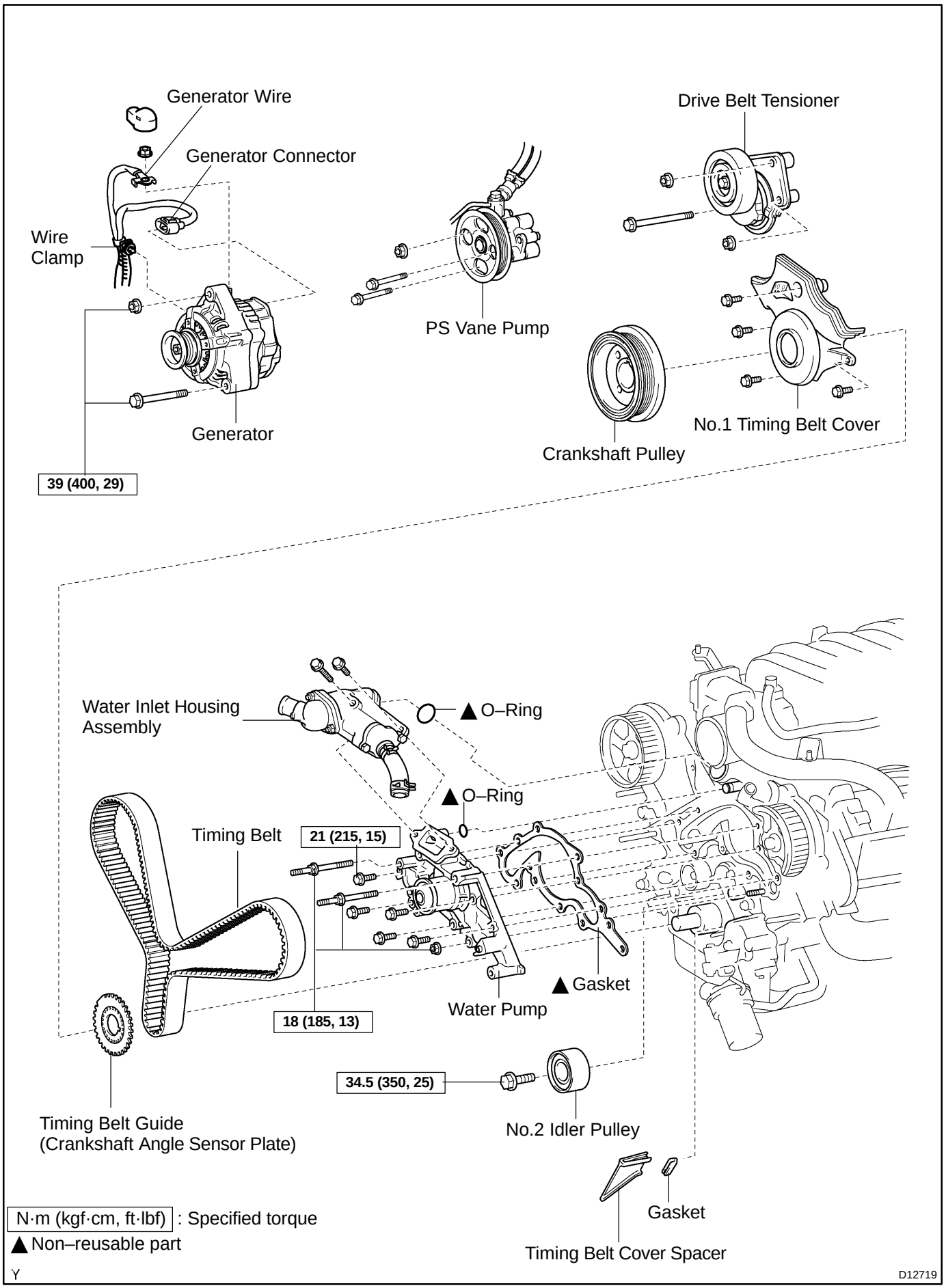
Generator Wire
Generator Connector
Wire Clamp
Generator
39 (400, 29)
PS Vane Pump
Drive Belt Tensioner
No.1 Timing Belt Cover
Crankshaft Pulley
Water Inlet Housing Assembly
▲O–Ring
▲O–Ring
Timing Belt
21 (215, 15)
▲Gasket
Water Pump
18 (185, 13)
34.5 (350, 25)
No.2 Idler Pulley
Timing Belt Guide (Crankshaft Angle Sensor Plate)
Gasket
Timing Belt Cover Spacer
N·m (kgf·cm, ft·lbf) : Specified torque
▲Non–reusable part
Y
D12719

CO0IR–05

REMOVAL

1. **DRAIN ENGINE COOLANT**
2. **REMOVE TIMING BELT (See page EM–14)**
3. **REMOVE NO.2 IDLER PULLEY (See page EM–14)**

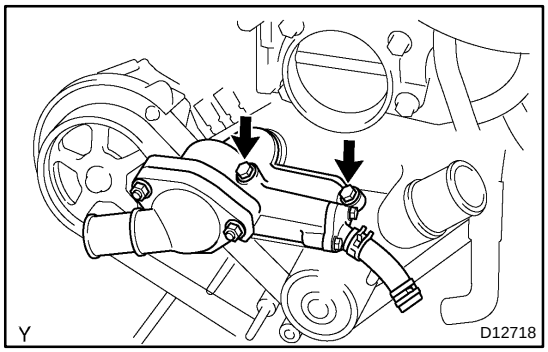

4. **REMOVE WATER INLET AND INLET HOUSING ASSEMBLY**

(a) Disconnect the water bypass hose from the water inlet housing.

(b) Remove the 2 bolts holding the water inlet housing to the water pump.

(c) Disconnect the water inlet housing from the front water bypass joint, and remove the water inlet and inlet housing assembly.

(d) Remove the O–ring from the water inlet housing.

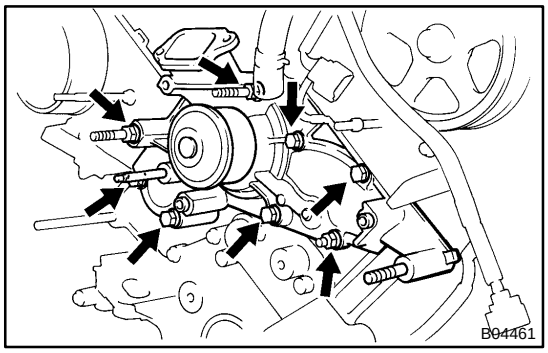

5. **REMOVE WATER PUMP**

(a) Remove the 5 bolts, 2 stud bolts, nut, water pump and gasket.

(b) Remove the O–ring from the water bypass pipe.

CO0UZ–04

INSPECTION

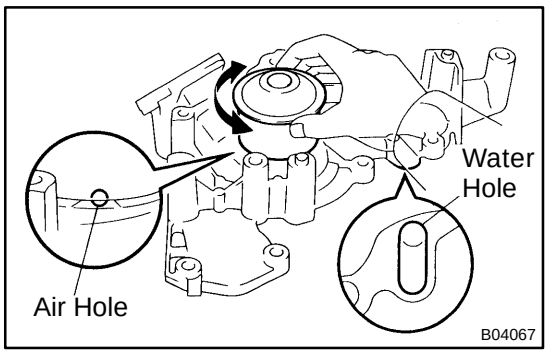

1. INSPECT WATER PUMP

(a) Visually check the air hole and water hole for coolant leakage.

If leakage is found, replace the water pump and timing belt.

(b) Turn the pulley, and check that the water pump bearing moves smoothly and quietly.

If necessary, replace the water pump.

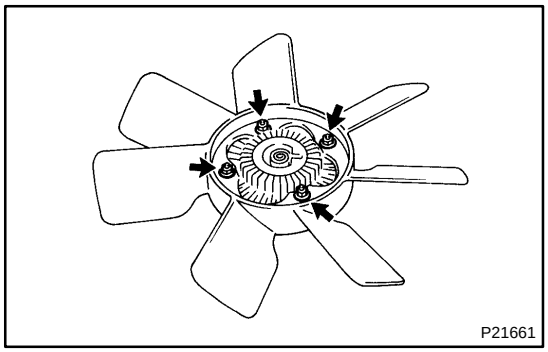

2. INSPECT FLUID COUPLING

(a) Remove the 4 nuts and fan from the fluid coupling.

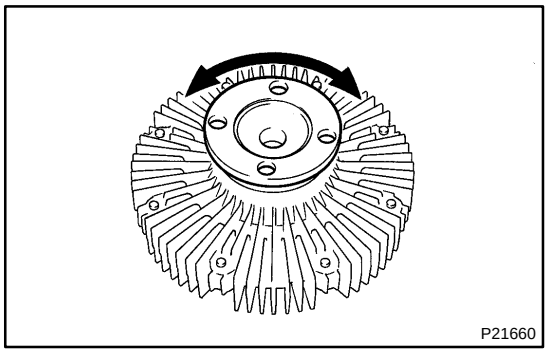

(b) Check that the fluid coupling is not damaged and that no silicon oil leaks.

If necessary, replace the fluid coupling.

(c) Reinstall the fan to the fluid coupling with the 4 nuts.

Torque: 5.4 N·m (55 kgf·cm, 47 in.·lbf)

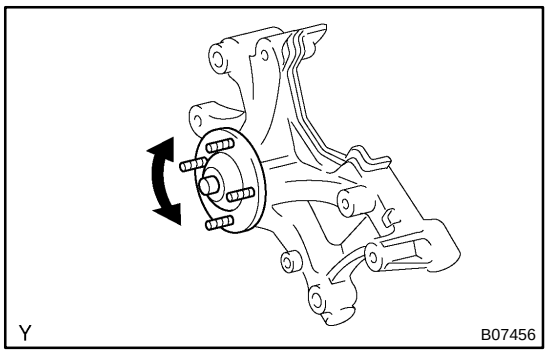

3. INSPECT FAN PULLEY BRACKET

Check the turning smoothness of the fan pulley.

If necessary, replace the pulley bracket.

4. INSPECT TIMING BELT COMPONENTS

(See page EM–19)

CO0IT–05

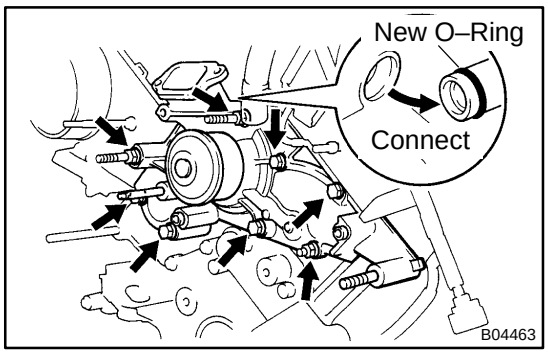

INSTALLATION

1. INSTALL WATER PUMP

(a) Install a new O–ring to the water bypass pipe end.

(b) Apply soapy water to the O–ring.

(c) Connect the water pump to the water bypass pipe end.

(d) Install the water pump and a new gasket with the 5 bolts, 2 stud bolts and nut. Uniformly tighten the bolts, stud bolts and nut in several passes.

Torque:

Bolt: 21 N·m (215 kgf·cm, 15 ft·lbf)

Stud bolt and nut: 18 N·m (185 kgf·cm, 13 ft·lbf)

2. INSTALL WATER INLET AND INLET HOUSING ASSEMBLY

(a) Remove any old packing (FIPG) material and be careful not to drop any oil on the contact surfaces of the water inlet housing and water pump.

- ▲ Using a razor blade and gasket scraper, remove all the old packing (FIPG) material from the gasket surfaces and sealing groove.
- ▲ Thoroughly clean all components to remove all the loose material.
- ▲ Using a non–residue solvent, clean both sealing surfaces.

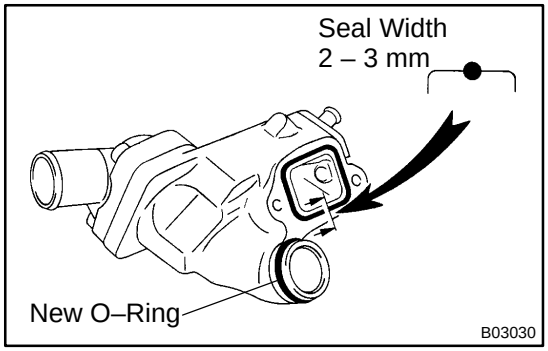

(b) Apply seal packing to the sealing groove of water inlet housing as shown in the illustration.

Seal packing: Part No. 08826–00100 or equivalent

- ▲ Install a nozzle that has been cut to a 2 – 3 mm (0.08 – 0.12 in.) opening.
- ▲ Parts must be assembled within 5 minutes of application. Otherwise the material must be removed and reapplied.
- ▲ Immediately remove nozzle from the tube and reinstall cap.

(c) Install a new O–ring to the water inlet housing.

(d) Apply soapy water on the O–ring.

(e) Attach the water inlet housing end to the front water bypass joint hole.

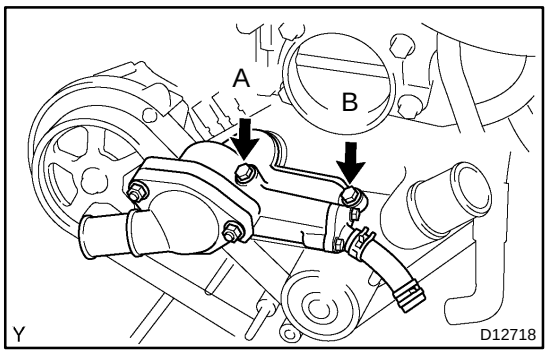

(f) Install the water inlet and housing assembly with the 2 bolts. Alternately tighten the bolts.
Torque: 18 N·m (185 kgf·cm, 13 ft·lbf)

HINT:
Each bolt length is indicated in the illustration.
Bolt length:
76 mm (3.00 in.) for A
22 mm (0.87 in.) for B

(g) Connect the water bypass hose to the water inlet housing.

3. INSTALL NO.2 IDLER PULLEY (See page EM–21)
4. INSTALL TIMING BELT (See page EM–21)
5. FILL WITH ENGINE COOLANT
6. START ENGINE AND CHECK FOR ENGINE COOLANT LEAKS
7. RECHECK ENGINE COOLANT LEVEL

THERMOSTAT

COMPONENTS

CO0IU–06

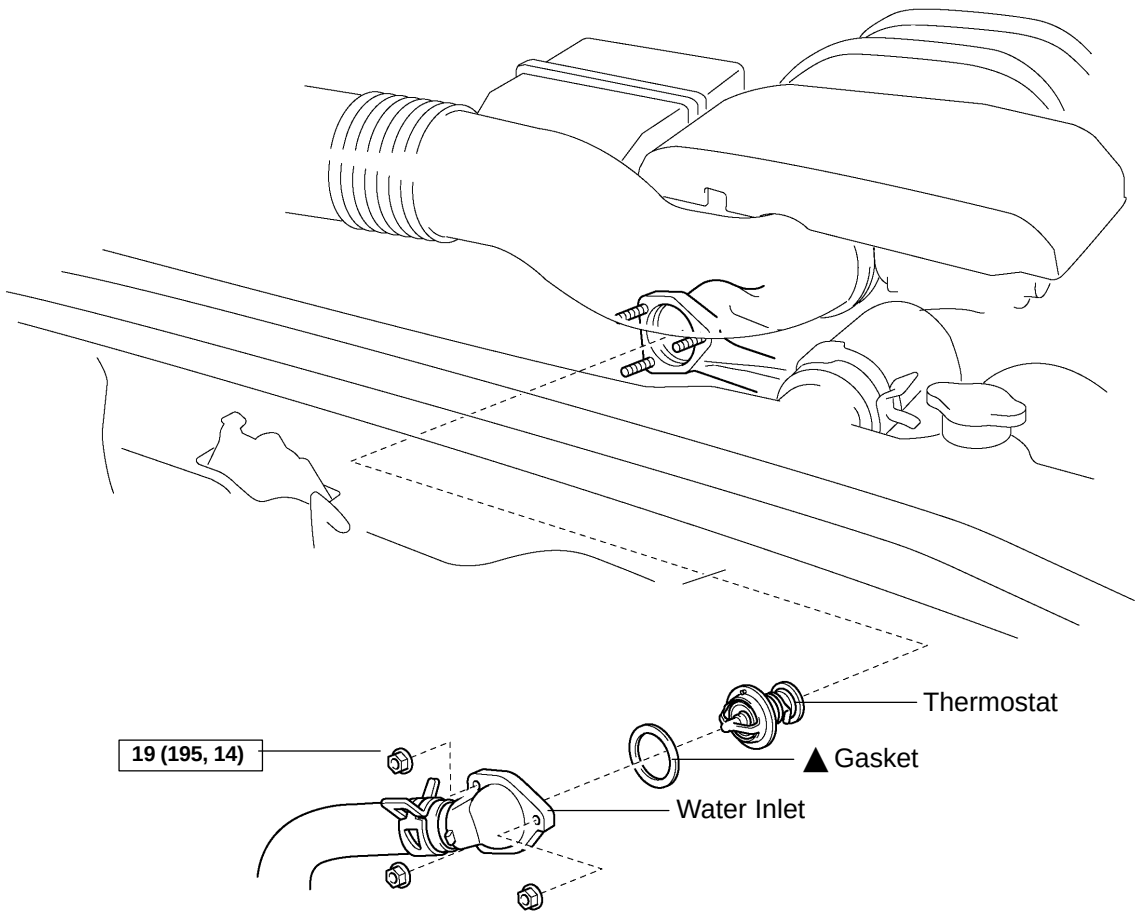

N·m (kgf·cm, ft·lbf) : Specified torque

▲ Non–reusable part

D12717

CO0IW–02

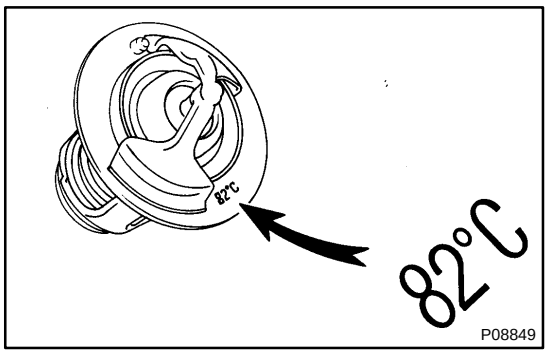

INSPECTION

INSPECT THERMOSTAT

HINT:

The thermostat is numbered with the valve opening temperature.

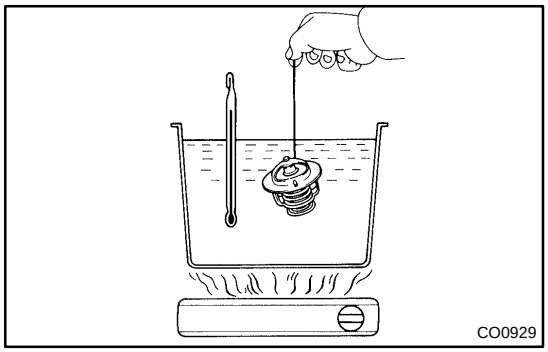

(a) Immerse the thermostat in water and gradually heat the water.

(b) Check the valve opening temperature.

Valve opening temperature: 80 – 84˚C (176 – 183˚F)

If the valve opening temperature is not as specified, replace the thermostat.

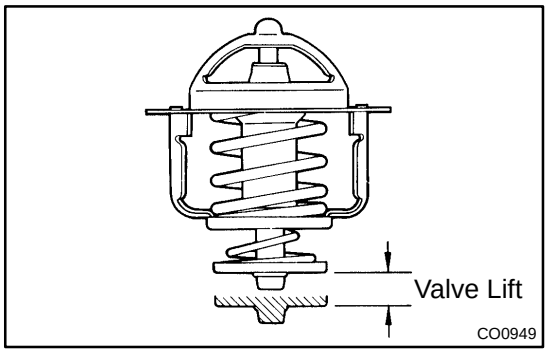

(c) Check the valve lift.

Valve lift: 10 mm (0.39 in.) or more at 95˚C (203˚F)

If the valve lift is not as specified, replace the thermostat.

(d) Check that the valve is fully closed when the thermostat is at low temperatures (below 40˚C (104˚F)).

If not closed, replace the thermostat.

CO0IV–02

REMOVAL

HINT:

Removal of the thermostat would have an adverse effect, causing a lowering of cooling efficiency. Do not remove the thermostat, even if the engine tends to overheat.

1. DRAIN ENGINE COOLANT

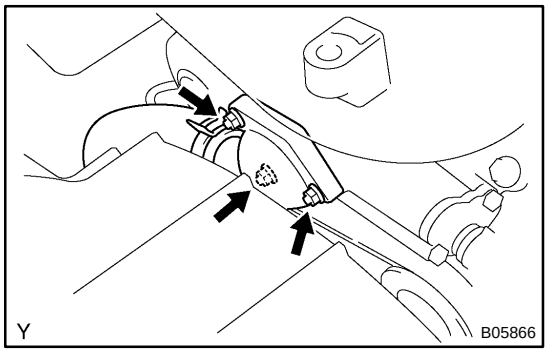

2. DISCONNECT WATER INLET FROM WATER INLET HOUSING

Remove the 3 nuts and disconnect the water inlet from the water inlet housing.

3. REMOVE THERMOSTAT

(a) Remove the thermostat.

(b) Remove the gasket from the thermostat.

CO0IX–03

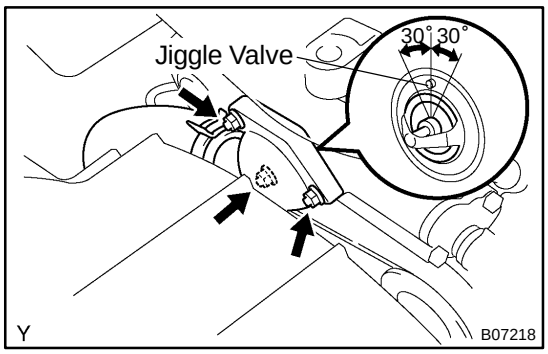

INSTALLATION

1. PLACE THERMOSTAT IN WATER INLET HOUSING

(a) Install a new gasket to the thermostat.

(b) Insert the thermostat into the water inlet housing with the jiggle valve facing straight upward.

HINT:

The jiggle valve may be set within 30° of either side of the prescribed position.

2. INSTALL WATER INLET

Install the water inlet with the 3 nuts.

Torque: 19 N·m (195 kgf·cm, 14 ft·lbf)

3. FILL WITH ENGINE COOLANT

4. START ENGINE AND CHECK FOR COOLANT LEAKS

5. RECHECK ENGINE COOLANT LEVEL

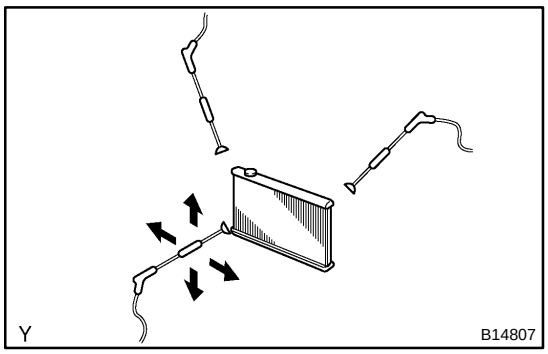

RADIATOR

CO1C6–01

ON–VEHICLE CLEANING

INSPECT FINS FOR BLOCKAGE

If fins are clogged, wash them with water or a steam cleaner and dry with compressed air.

NOTICE:

- **If the distance between the steam cleaner and the core is too close, there is a possibility of damaging the fin, so keep the following injection distance.**

Injection Pressure	Injection Distance
2,942 – 4,903 kPa (30 – 80 kgf·cm^2, 427 – 711 psi)	300 mm (11.81 in.)
4,903 – 7,845 kPa (50 – 80 kgf·cm^2, 711 – 1,138 psi)	500 mm (19.69 in.)

- **If the fins are bent, straighten them with a screwdriver or pliers.**
- **Never apply water directly onto the electronic components.**

CO0IZ–07

ON–VEHICLE INSPECTION

1. REMOVE RADIATOR CAP

CAUTION:

To avoid the danger of being burned, do not remove the radiator cap while the engine and radiator are still hot, as fluid and steam can be blown out under pressure.

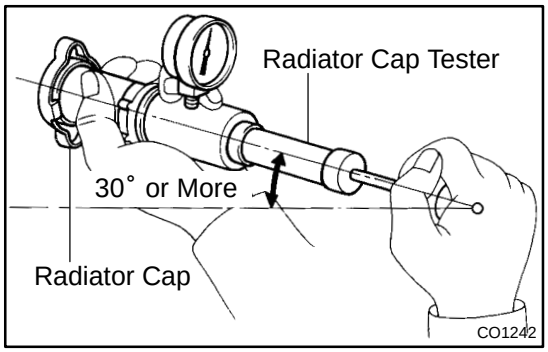

2. INSPECT RADIATOR CAP

NOTICE:

- **If the radiator cap has contaminations, always rinse it with water.**
- **Before using a radiator cap tester, wet the relief valve and pressure valve with engine coolant or water.**
- **When performing steps (a) and (b) below, keep the tester at an angle of over 30° above the horizontal.**

(a) Using a radiator cap tester, slowly pump the tester and check that air is coming from the vacuum valve.

Pump speed: 1 push/(3 seconds or more)

NOTICE:

Push the pump at a constant speed.

If air is not coming from the vacuum valve, replace the radiator cap.

(b) Pump the radiator cap tester, and measure the relief valve opening pressure.

Pump speed: 1 push within 1 second

NOTICE:

This pump speed is for the first pump only (in order to close the vacuum valve). After this, the pump speed can be reduced.

Opening pressure:

Standard	74 – 103 kPa (0.75 – 1.05 kgf/cm^2,10.7 – 14.9 psi)
Minimum	59 kPa (0.6 kgf/cm^2, 8.6 psi)

HINT:

Use the tester's maximum reading as the opening pressure.

If the opening pressure is less than minimum, replace the radiator cap.

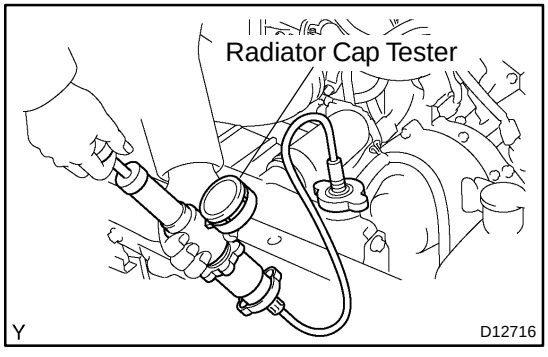

3. INSPECT COOLING SYSTEM FOR LEAKS

(a) Fill the radiator with coolant and attach a radiator cap tester.

(b) Warm up the engine.

(c) Pump it to 118 kPa (1.2 kgf/cm^2, 17.1 psi), and check that the pressure does not drop.

If the pressure drops, check the hoses, radiator or water pump for leaks. If no external leaks are found, check the heater core, cylinder block and head.

4. REINSTALL RADIATOR CAP

CO0UU–03

COMPONENTS

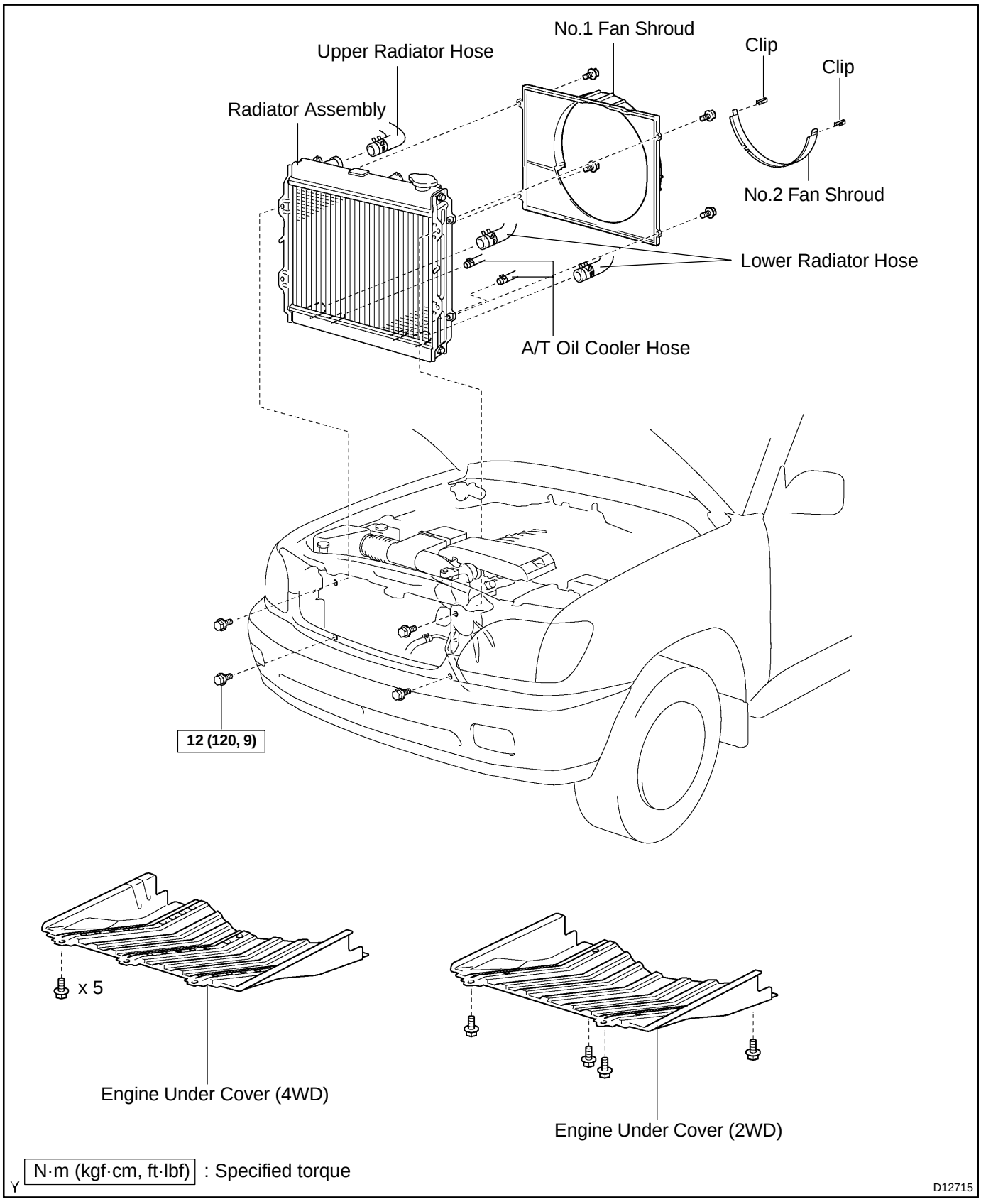

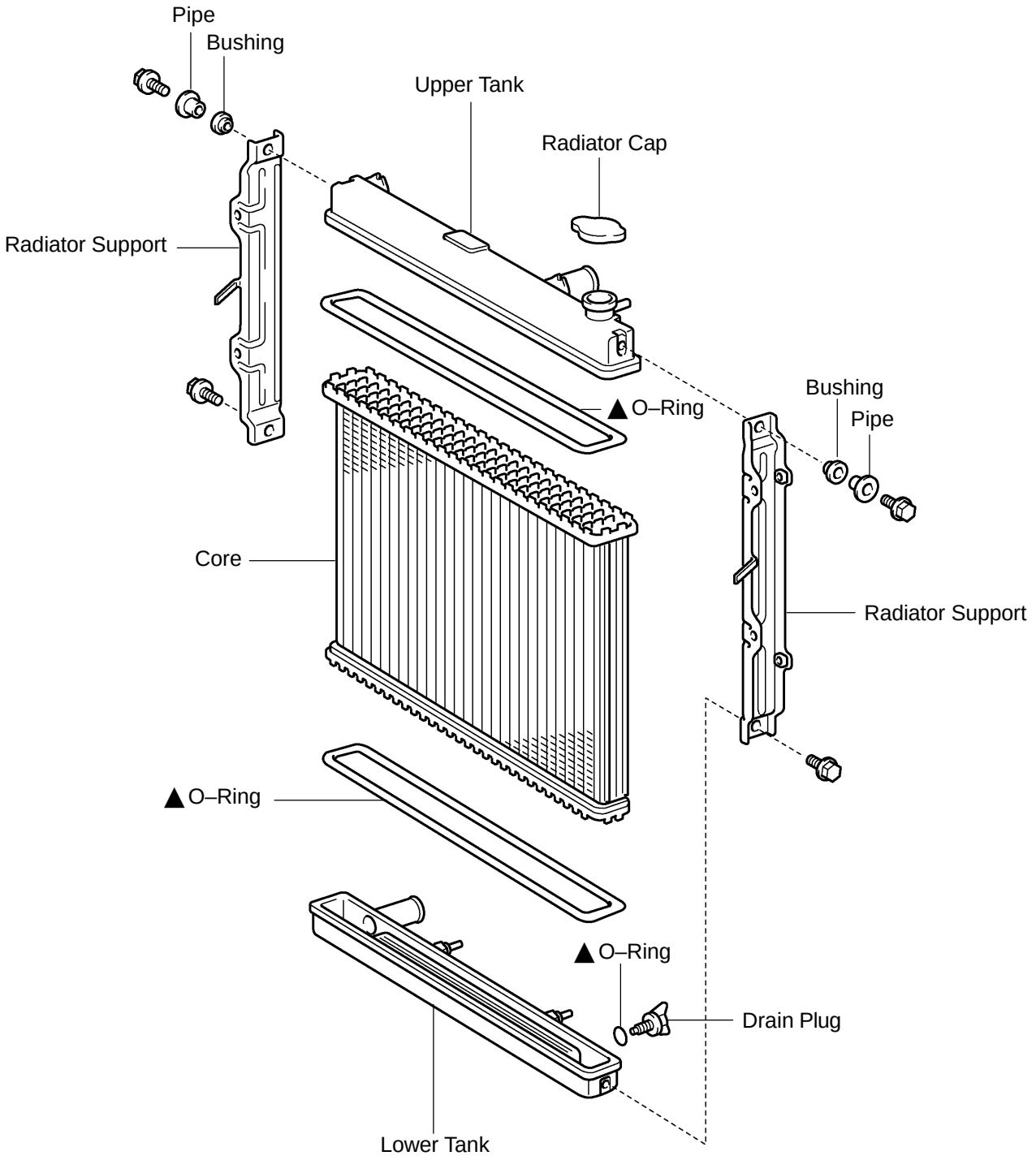

Y ▲Non–reusable part

B07221

CO0UV–01

REMOVAL

1. **REMOVE ENGINE UNDER COVER**
2. **DRAIN ENGINE COOLANT**
3. **DISCONNECT RADIATOR RESERVOIR HOSE FROM RADIATOR**
4. **DISCONNECT UPPER RADIATOR HOSE FROM RADIATOR**
5. **DISCONNECT LOWER RADIATOR HOSE FROM RADIATOR**
6. **DISCONNECT A/T OIL COOLER HOSES FROM RADIATOR**
7. **REMOVE NO.2 FAN SHROUD**

Remove the 2 clips and No.2 fan shroud.

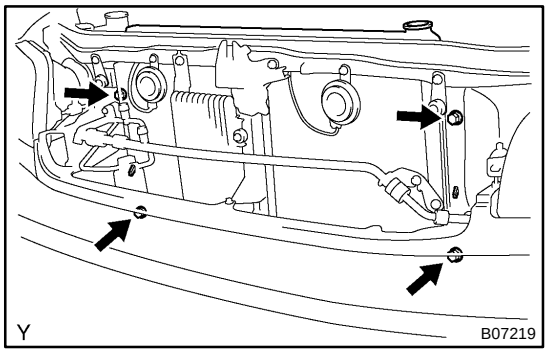

8. **REMOVE RADIATOR ASSEMBLY**

Remove the 4 bolts and radiator assembly.

9. **REMOVE NO.1 FAN SHROUD**

Remove the 4 bolts and No.1 fan shroud.

CO0UW–01

DISASSEMBLY

1. REMOVE RADIATOR SUPPORTS

Remove the 4 bolts, 2 pipes, 2 bushings and 2 radiator supports.

2. REMOVE RADIATOR CAP

3. REMOVE DRAIN PLUG

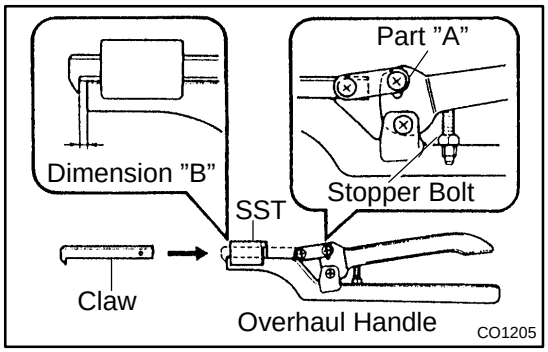

4. ASSEMBLE SST

SST 09230–01010

(a) Install the claw to the overhaul handle, inserting it in the hole in part ”A” as shown in the diagram.

(b) While gripping the handle, adjust the stopper bolt so that dimension ”B” shown in the diagram is 0.2 – 0.3 mm (0.008 – 0.012 in.).

NOTICE:

If this adjustment is not done, the claw may be damaged.

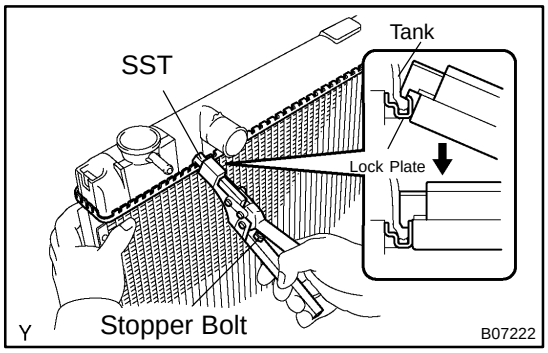

5. UNCAULK LOCK PLATES

Using SST to release the caulking, squeeze the handle until stopped by the stopper bolt.

SST 09230–01010

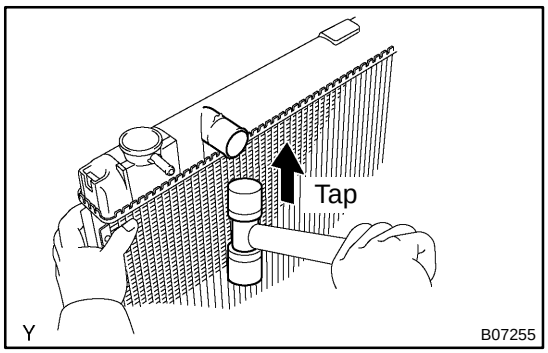

6. REMOVE TANKS AND O–RINGS

(a) Lightly tap the radiator port (inlet or outlet) with a soft–faced hammer, and remove the tank.

(b) Remove the O–ring.

CO0UY–01

INSTALLATION

1. INSTALL NO.1 FAN SHROUD

Install the No.1 fan shroud with the 4 bolts.

Torque: 5 N·m (50 kgf·cm, 44 in.·lbf)

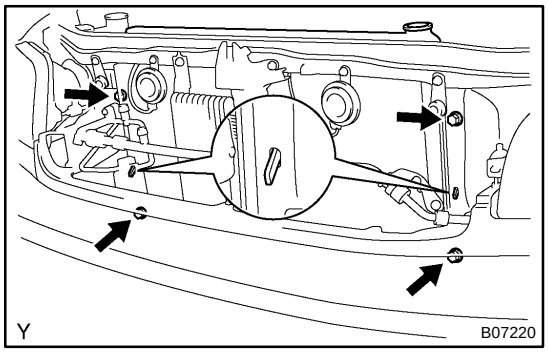

2. INSTALL RADIATOR ASSEMBLY

(a) Set the radiator bracket hooks to the radiator support holes.

(b) Install the 4 bolts.

Torque: 12 N·m (120 N·m, 9 ft·lbf)

3. INSTALL NO.2 FAN SHROUD

Install the No.2 fan shroud with the 2 clips.

4. CONNECT A/T OIL COOLER HOSES TO RADIATOR

5. CONNECT UPPER RADIATOR HOSE TO RADIATOR

6. CONNECT LOWER RADIATOR HOSE TO RADIATOR

7. CONNECT RADIATOR RESERVOIR HOSE TO RADIATOR

8. FILL WITH ENGINE COOLANT

9. START ENGINE AND CHECK FOR ENGINE COOLANT LEAKS

10. RECHECK ENGINE COOLANT LEVEL

11. INSTALL ENGINE UNDER COVER

CO0UX–01

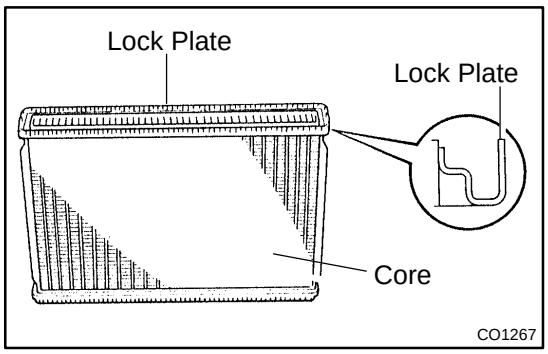

REASSEMBLY

1. INSPECT LOCK PLATE

Inspect the lock plate for damage.

HINT:

- ▲ If the sides of the lock plate groove are deformed, reassembly of the tank will be impossible.
- ▲ Therefore, first correct any deformation with pliers or similar object. Water leakage will result if the bottom of the lock plate groove is damaged or dented. Therefore, repair or replace if necessary.

NOTICE:

The radiator can only be recaulked 2 times.

After the 2nd time, the radiator core must be replaced.

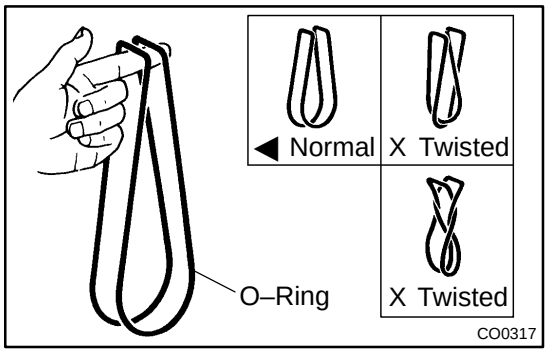

2. INSTALL NEW O–RINGS AND TANKS

(a) After checking that there are no foreign objects in the lock plate groove, install the new O–ring without twisting it.

HINT:

When cleaning the lock plate groove, lightly rub it with sand paper without scratching it.

(b) Install the tank without damaging the O–ring.

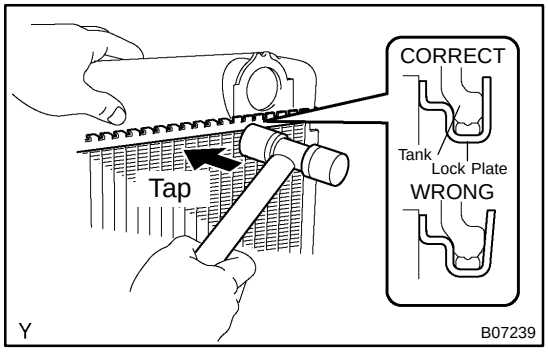

(c) Tap the lock plate with a soft–faced hammer so that there is no gap between it and the tank.

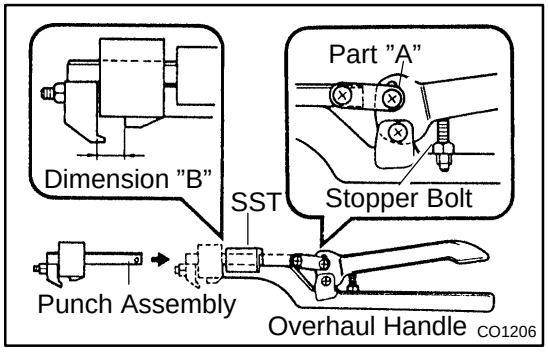

3. ASSEMBLE SST

SST 09230–01010, 09231–14010

(a) Install the punch assembly to the overhaul handle, inserting it in the hole in part ”A” as shown in the illustration.

(b) While gripping the handle, adjust the stopper bolt so that dimension ”B” shown in the diagram.

Dimension ”B”: 8.4 mm (0.34 in.)

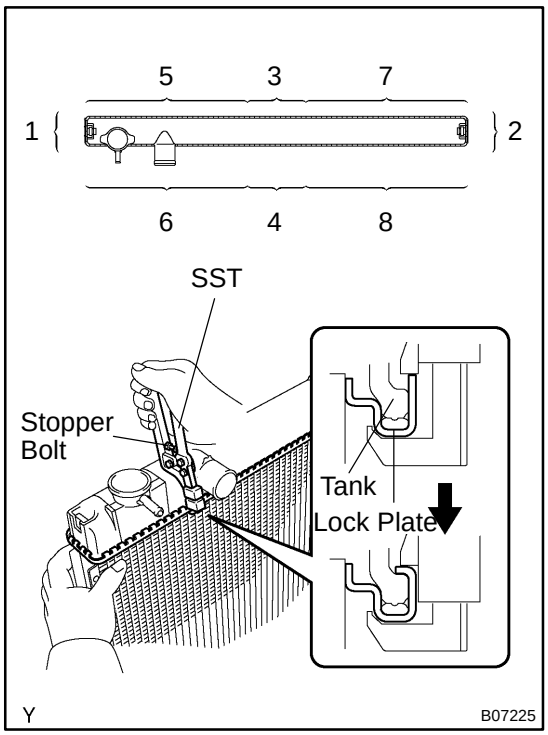

4. CAULK LOCK PLATE

(a) Lightly press SST against the lock plate in the order shown in the illustration. After repeating this a few times, fully caulk the lock plate by squeezing the handle until stopped by the stopper bolt.
SST 09230–01010

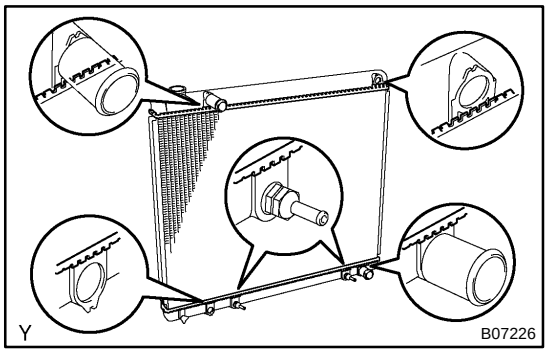

HINT:

▲ Do not stake the areas protruding around the ports and flanges.

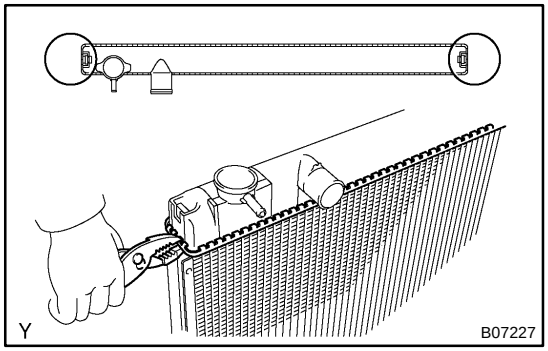

▲ The points shown in the rib sides near here cannot be staked with SST. Use pliers or similar object and be careful not to damage the core plates.

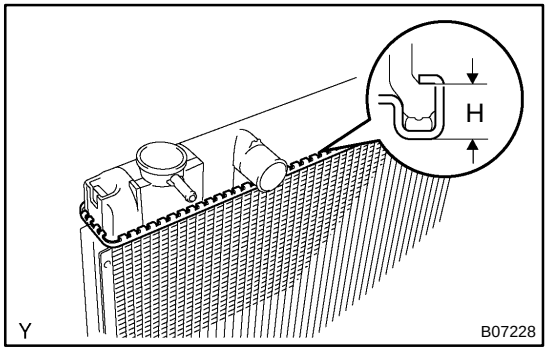

(b) Check the lock plate height (H) after completing the caulking.
Plate height (H): 7.4 – 7.8 mm (0.2959 – 0.3119 in.)

If not within the specified height, adjust the stopper bolt of the handle again and caulk again.

5. INSTALL DRAIN PLUG

(a) Install a new O–ring to the drain plug.
(b) Apply soapy water to the O–ring.
(c) Install the drain plug.

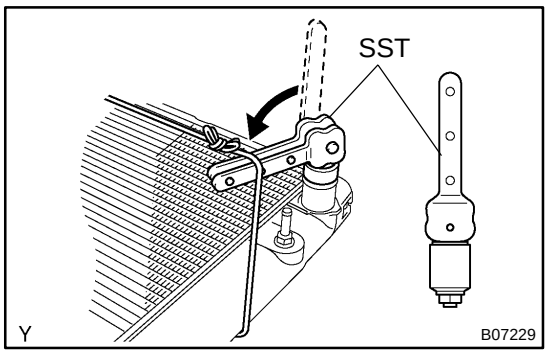

6. CHECK FOR WATER LEAKS

(a) Using SST, plug the inlet and outlet pipes of the radiator.
SST 09230–01010

(b) Using a radiator cap tester, apply pressure to the radiator.
Test pressure: 147 kPa (1.5 kgf/cm^2, 21 psi)

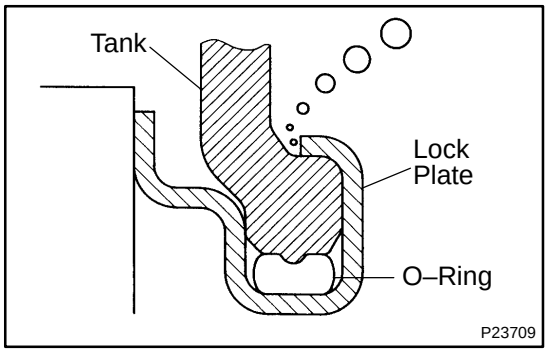

(c) Check for water leaks.

HINT:

On radiators with resin tanks, there is a clearance between the core plate and tank plate where a minute amount of air will remain, giving the appearance of an air leak when the radiator is submerged in water. Therefore, before performing the water leak test, first swirl the radiator around in the water until all air bubbles disappear.

7. INSTALL RADIATOR SUPPORTS

Install the 2 radiator supports, 2 bushings and 2 pipes with the 4 bolts.

Torque: 12.7 N·m (130 kgf·cm, 9 ft·lbf)

8. INSTALL RADIATOR CAP

ENGINE (5VZ–FE)

DI0RJ–13

HOW TO PROCEED WITH TROUBLESHOOTING

Troubleshoot in accordance with the procedure on the following page.

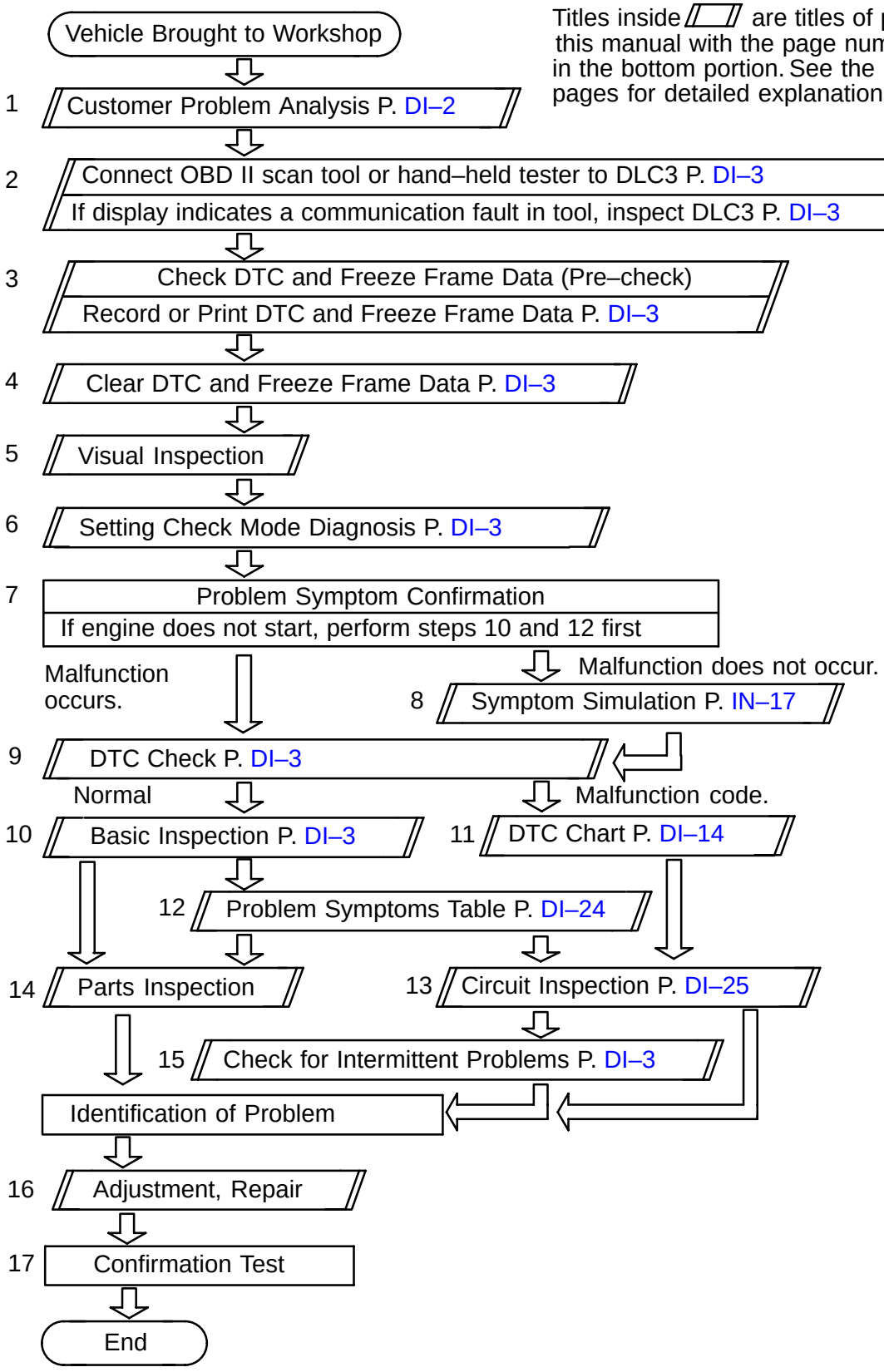

Titles inside ▱ are titles of pages in this manual with the page number indicated in the bottom portion. See the indicated pages for detailed explanations.

DI0RK–11

CUSTOMER PROBLEM ANALYSIS CHECK

ENGINE CONTROL SYSTEM Check Sheet

Inspector's Name

Customer's Name		Model and Model Year	
Driver's Name		Frame No.	
Date Vehicle Brought in		Engine Model	
License No.		Odometer Reading	km miles

Problem Symptoms	☐ Engine does not Start	☐ Engine is not cranked ☐ No initial combustion ☐ No complete combustion
	☐ Difficult to Start	☐ Engine is cranked slowly ☐ Other _____
	☐ Poor Idling	☐ Incorrect first idle ☐ Idling rpm is abnormal ☐ High (rpm) ☐ Low (rpm) ☐ Rough idling ☐ Other _____
	☐ Poor Driveability	☐ Hesitation ☐ Back fire ☐ Muffler explosion (after–fire) ☐ Surging ☐ Knocking ☐ Other _____
	☐ Engine Stall	☐ Soon after starting ☐ After accelerator pedal depressed ☐ After accelerator pedal released ☐ During A/C operation ☐ Shifting from N to D ☐ Other _____
	☐ Others	

Date Problem Occurred		
Problem Frequency		☐ Constant ☐ Sometimes (times per day/month) ☐ Once only ☐ Other _____
Condition When Problem Occurs	Weather	☐ Fine ☐ Cloudy ☐ Rainy ☐ Snowy ☐ Various/Other _____
	Outdoor Temperature	☐ Hot ☐ Warm ☐ Cool ☐ Cold (approx. ____˚F/____˚C)
	Place	☐ Highway ☐ Suburbs ☐ Inner city ☐ Uphill ☐ Downhill ☐ Rough road ☐ Other _____
	Engine Temperature	☐ Cold ☐ Warming up ☐ After warming up ☐ Any temperature ☐ Other _____
	Engine Operation	☐ Starting ☐ Just after starting (min.) ☐ Idling ☐ Racing ☐ Driving ☐ Constant speed ☐ Acceleration ☐ Deceleration ☐ A/C switch ON/OFF ☐ Other _____

Condition of MIL		☐ Remains on	☐ Sometimes lights up ☐ Does not light up
DTC Inspection	Normal Mode (Pre–check)	☐ Normal	☐ Malfunction code(s) (code) ☐ Freeze frame data ( )
	Check Mode	☐ Normal	☐ Malfunction code(s) (code) ☐ Freeze frame data ( )

DI8CQ–02

PRE–CHECK

1. DIAGNOSIS SYSTEM

(a) Description

▲ When troubleshooting OBD II vehicles, the only difference from the usual troubleshooting procedure is that you need to connect the vehicle to the OBD II scan tool complying with SAE J1978 or the hand–held tester, and read off various data output from the vehicle's ECM.

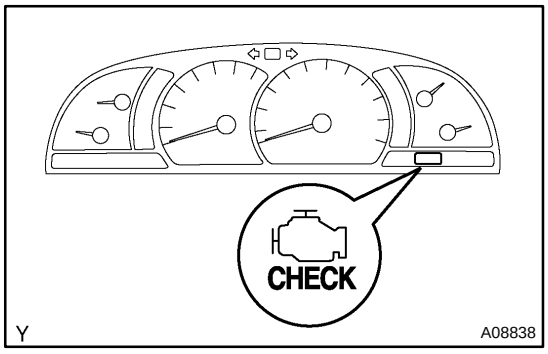

▲ OBD II regulations require that the vehicle's on–board computer lights up the Malfunction Indicator Light (MIL) on the instrument panel when the computer detects a malfunction in the emission control system/components or in the powertrain control components which affect the vehicle emissions, or a malfunction in the computer. In addition to the MIL lighting up when a malfunction is detected, the applicable Diagnostic Trouble Codes (DTC) prescribed by SAE J2012 are recorded in the ECM memory (See page DI–14).

If the malfunction does not reoccur in 3 consecutive trips, the MIL goes off automatically but the DTCs remain recorded in the ECM memory.

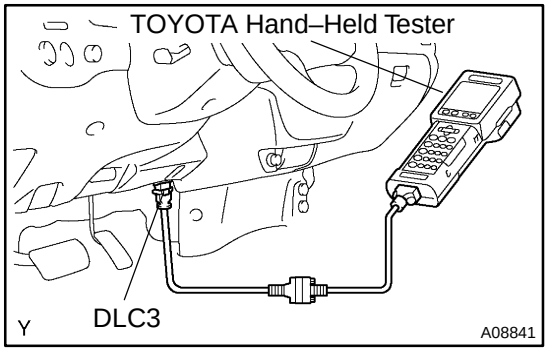

▲ To check the DTC, connect the OBD II scan tool or hand–held tester to the Data Link Connector 3 (DLC3) of the vehicle. The OBD II scan tool or TOYOTA hand–held tester also enables you to erase the DTC and check freeze frame data and various forms of engine data (for operating instructions, see the OBD II scan tool's instruction book).

The DTC includes SAE controlled codes and manufacturer controlled codes. SAE controlled codes must be set as prescribed by the SAE, while manufacturer controlled codes can be set freely by a manufacturer within the prescribed limits (See the DTC chart on page DI–14).

▲ The diagnosis system operates in the normal mode during the normal vehicle use. It also has a check mode for technicians to simulate malfunction symptoms and troubleshoot it. Most DTCs use 2 trip detection logic* to prevent an erroneous detections, and ensure a through malfunction detection. By switching the ECM to the check mode when troubleshooting, a technician can cause the MIL to light up for a malfunction that is only detected once or momentarily. (hand–held tester only) (See step 2).

▲ *2 trip detection logic:
When a malfunction is first detected, the malfunction is temporarily stored in the ECM memory. (1st trip)

If the same malfunction is detected again during the second drive test, this second detection causes the MIL to light up (2nd trip) (however, the ignition switch must be turned OFF between the 1st 2 trip and 2nd 2 trip).

▲ Freeze frame data:
The freeze frame data records the engine conditions (fuel system, calculated load, engine coolant temperature, fuel trim, engine speed, vehicle speed, etc.) when a malfunction is detected. When troubleshooting, it is useful for determining whether the vehicle was running or stopped, the engine warmed up or not, the air–fuel ratio was lean or rich, etc. at the time of the malfunction.

Priorities for troubleshooting:
If troubleshooting priorities for multiple DTCs are given in the applicable DTC chart, these priorities should be followed.
If no instructions are given, perform troubleshootings for those DTCs according to the following priorities.

(1) DTCs other than fuel trim malfunction (DTCs P0171 and P0172) and misfire (DTCs P0300 – P0306).
(2) Fuel trim malfunction (DTCs P0171 and P0172).
(3) Misfire (DTCs P0300 – P0306).

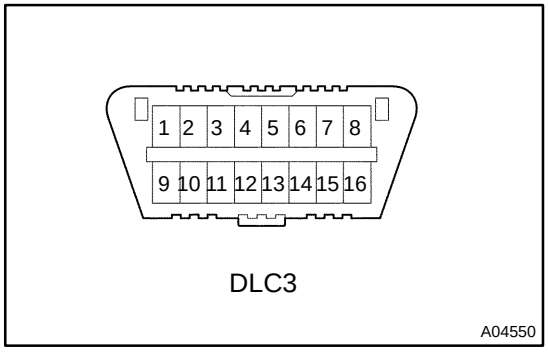

(b) Check the DLC3.
The vehicle's ECM uses the ISO 9141–2 for the communication protocol. The terminal arrangement of the DLC3 complies with SAE J1962 and matches the ISO 9141–2 format.

Terminal No.	Connection/Voltage or Resistance	Condition
7	Bus (+) Line/Pulse generation	During transmission
4	Chassis Ground – Body Ground/1 Ω or less	Always
5	Signal Ground – Body Ground/1 Ω or less	Always
16	Battery Positive – Body Ground/9 – 14 V	Always

HINT:

If the display shows UNABLE TO CONNECT TO VEHICLE when you have connected the cable of the OBD II scan tool or the hand–held tester to the DLC3, turned the ignition switch ON and operated the scan tool, there is a problem on the vehicle side or tool side.

- If the communication is normal when the tool is connected to another vehicle, inspect the DLC3 on the original vehicle.
- If the communication is still impossible when the tool is connected to another vehicle, the problem is probably in the tool itself, so consult the Service Department listed in the tool's instruction manual.

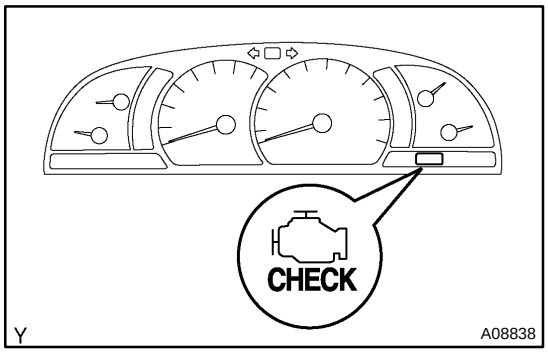

2. Normal Mode:
INSPECT DIAGNOSIS

(a) Check the MIL.

(1) The MIL comes on when the ignition switch is turned ON and the engine is not running.

HINT:

If the MIL does not light up, troubleshoot the combination meter (See page BE–2).

(2) When the engine is started, the MIL should go off. If the light remains on, the diagnosis system has detected a malfunction or abnormality in the system.

(b) Check the DTC.

NOTICE:

- **If there is no DTC in the normal mode, check the 1st trip DTC using Continuous Test Results function (Mode 7 for SAE J1979) on the OBDII scan tool or the hand–held tester.**
- **Hand–held tester only:**
  When the diagnosis system is switched from the normal mode to the check mode, all the DTCs and freeze frame data recorded in the normal mode will be erased. So before switching modes, always check the DTCs and freeze frame data, and note them down.

(1) Prepare the OBD II scan tool (complying with SAE J1978) or the hand–held tester.

(2) Connect the OBD II scan tool or the hand–held tester to the DLC3 at the lower center of the instrument panel.

(3) Turn the ignition switch ON and push the OBD II scan tool or the hand–held tester main switch ON.

(4) Use the OBD II scan tool or the hand–held tester to check the DTCs and freeze frame data and note them down (for operating instructions, see the OBD II scan tool's instruction book).

If there is no DTC in the normal mode, check the 1st trip DTC using the Continuous Test Results function (Mode 7 for SAE J1979) on the OBDII scan tool or the hand–held tester.

(5) See page DI–3 to confirm the details of the DTCs.

NOTICE:

- **When simulating a symptom with OBD II scan tool (excluding hand–held tester) to check the DTCs, use the normal mode. For code on the DTC chart subject to "2 trip detection logic", perform either of the following actions.**
- **Turn the ignition switch OFF after the symptom is simulated once. Then repeat the simulation process again. When the problem has been simulated twice, the MIL lights up and the DTCs are recorded in the ECM.**
- **Check the 1st trip DTC using Mode 7 (Continuous Test Results) for SAE J1979.**

(c) Clear the DTC.

The DTCs and freeze frame data will be erased by either action.

(1) Operating the OBD II scan tool (complying with SAE J1978) or the hand–held tester to erase the codes. (See the OBD II scan tool's instruction book for operating instructions.)

(2) Disconnecting the battery terminals or EFI fuse.

NOTICE:

If the hand–held tester switches the ECM from the normal mode to the check mode or vice–versa, or if the ignition switch is turned from ON to ACC or OFF during the check mode, the DTCs and freeze frame data will be erased.

3. Check Mode:

INSPECT DIAGNOSIS

HINT:

Hand–held tester only:

Compared to the normal mode, the check mode has an increased sensitivity to detect malfunctions. Furthermore, the same diagnostic items which are detected in the normal mode can also be detected in the check mode.

(a) Check the DTC.

(1) Initial conditions.

- Battery positive voltage 11 V or more
- Throttle valve fully closed
- Transmission in the P or N position
- A/C switched OFF

(2) Turn the ignition switch OFF.

(3) Prepare the hand–held tester.
(4) Connect the hand–held tester to the DLC3 of the vehicle.
(5) Turn the ignition switch ON and push the hand–held tester main switch ON.

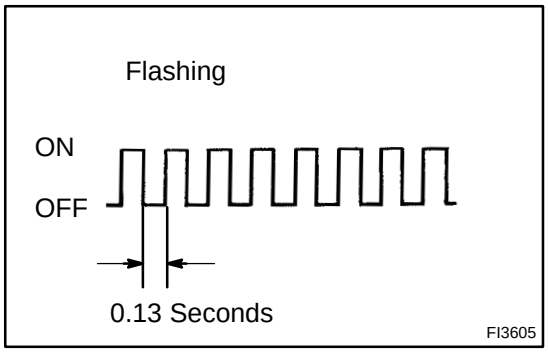

(6) Switch the hand–held tester from the normal mode to the check mode (Check that the MIL flashes.).

NOTICE:

If the hand–held tester switches the ECM from the normal mode to the check mode or vice–versa, or if the ignition switch is turned from ON to ACC or OFF during the check mode, the DTC and freeze frame data will be erased.

(7) Start the engine (the MIL goes off after the engine start).
(8) Simulate the conditions of the malfunction described by the customer.

NOTICE:

Leave the ignition switch ON until you have checked the DTC, etc.

(9) After simulating the malfunction conditions, use the hand–held tester diagnosis selector to check the DTC and freeze frame data, etc.

HINT:

Be careful not to turn the ignition switch OFF. Turning the ignition switch OFF switches the diagnosis system from the check mode to the normal mode, so all the DTCs, etc. are erased.

(10) After checking the DTC, inspect the applicable circuit.

(b) Clear the DTC.
(1) The following actions will erase the DTCs and freeze frame data.
▲ Operating the hand–held tester to erase the codes. (See the hand–held tester's instruction book for operating instructions.)
▲ Disconnecting the battery terminal or the EFI fuse.

4. FAIL–SAFE CHART

If any of the following codes are recorded, the ECM enters into the ail–safe mode.

DTC No.	Fail–Safe Operation	Fail–Safe Deactivation Conditions
P0100 P0102 P0103	Ignition timing is fixed at 10° BTDC	Returned to normal condition
P0110 P0112 P0113	Intake air temp. is fixed at 20°C (68°F)	Returned to normal condition
P0115 P0117 P0118	Engine coolant temp. is fixed at 80°C (176°F)	Returned to normal condition
P0120	VTA is fixed at 0°	Following condition must be repeated at least 2 times consecutively (a) VTA > 0.1 V and < 0.95 V, vehicle speed= 0 km/h (only ECT) (b) Vehicle speed: 0 km/h (0 mph) (only for A/T)
P0037 P0038	The heater circuit in which an abnormality is detected is turned off	Ignition switch OFF
P0325 P0327 P0328 P0330 P0332 P0333	Max. timing retardation	Ignition switch OFF
P0351 P0352 P0353 P0354 P0355 P0356	Fuel cut	Returned to normal condition

5. CHECK FOR INTERMITTENT PROBLEMS

Hand–held tester only:

By putting the vehicle's ECM in the check mode, 1 trip detection logic is possible instead of the 2 trip detection logic and the sensitivity to detect open circuits is increased. This makes it easier to detect intermittent problems.

(1) Clear the DTCs (See step 2).
(2) Set the check mode (See step 3).
(3) Perform a simulation test (See page IN–17).
(4) Check the connector and terminal (See page IN–27).
(5) Handle the connector (See page IN–27)

6. BASIC INSPECTION

When the malfunction code is not confirmed in the DTC check, troubleshooting should be carried out in all the possible circuits considered as the causes of the problems. In many cases, by carrying out the basic engine check shown in the following flow chart, the location causing the problem can be found quickly and efficiently. Therefore, use this check is essential in the engine troubleshooting.

1	**Is battery positive voltage 11 V or more when engine stops?**

NO → **Charge or replace battery.**

YES

2	**Is engine cranked?**

NO → **Proceed to page ST–16, and continue to troubleshoot.**

YES

3	**Does engine start?**

NO → **Go to step 7.**

YES

4	**Check air filter.**

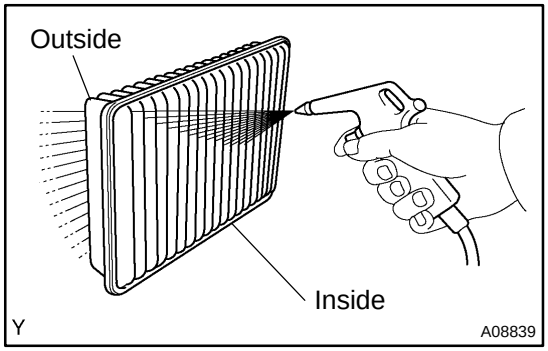

PREPARATION:

Remove the air filter.

CHECK:

Visually check that the air filter is not dirty or excessive oily.

HINT:

If necessary, clean the air filter with compressed air. First blow from the inside thoroughly, second blow from the outside of the air filter.

NG → **Repair or replace.**

OK

5	Check idle speed.

PREPARATION:

(a) Warm up the engine to the normal operating temperature.
(b) Switch off all the accessories.
(c) Switch off the A/C.
(d) Shift the transmission into the N position.
(e) Connect the OBD II scan tool or hand–held tester to the DLC3 of the vehicle.

CHECK:

Use the CURRENT DATA to check the idle speed.

OK:

Idle speed: 650 – 750 rpm

NG → **Proceed to problem symptoms table on page DI–24.**

OK

6	Check ignition timing.

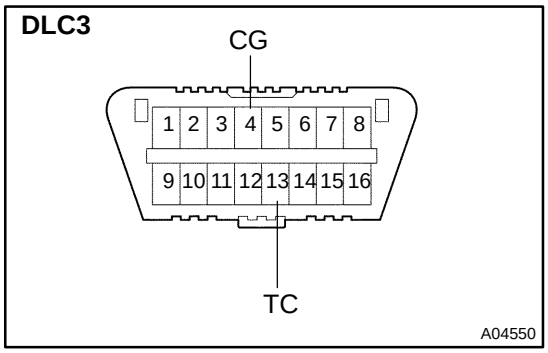

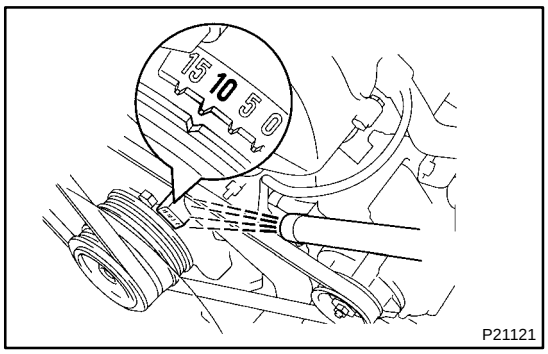

PREPARATION:

(a) Warm up the engine to the normal operating temperature.
(b) Shift the transmission into the N position.
(c) Keep the engine speed at idle.
(d) Using SST, connect terminals TC and CG of the DLC3.
SST 09843–18040
(e) Using a timing light, connect the tester to the No.1 high–tension cord.

CHECK:

Check the ignition timing.

OK:

Ignition timing: 8 – 12° BTDC at idle

NG → **Proceed to page IG–1 and continue to trouble-shoot.**

OK

Proceed to problem symptoms table on page DI–24.

7	Check fuel pressure.

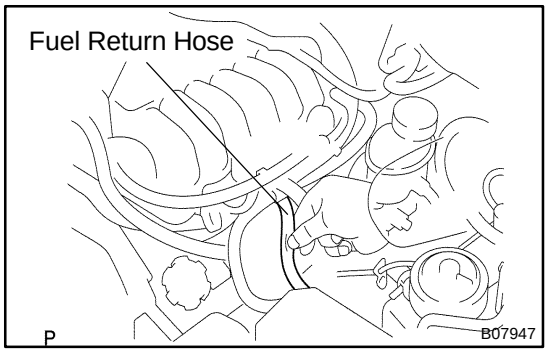

PREPARATION:

(a) Be sure that the enough fuel is in the tank.
(b) Connect the hand–held tester to the DLC3.
(c) Turn the ignition switch ON and push the hand–held tester main switch ON.
(d) Use the ACTIVE TEST mode to operate the fuel pump.
(e) Please refer to the hand–held tester operator's manual for further details.
(f) If you have no hand–held tester, connect the positive (+) and negative (–) leads from the battery to the fuel pump connector (See page SF–7).

CHECK:

Check for the fuel pressure in the fuel return hose when it is pinched by hand.

HINT:

At this time, you will hear the fuel flowing noise.

NG → **Proceed to page SF–7, and continue to troubleshoot.**

OK

8	Check for spark.

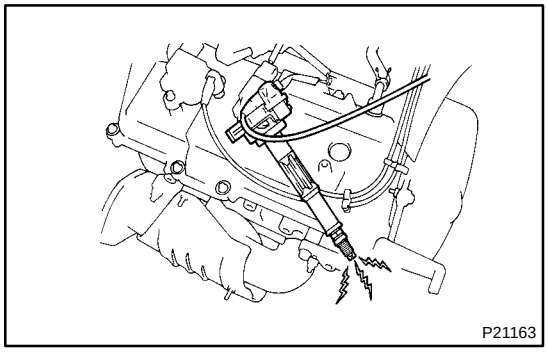

PREPARATION:

(a) Remove the ignition coil or disconnect the high–tension cord from the spark plug.
(b) Remove the spark plug.
(c) Install the spark plug to the ignition coil or high–tension cord.
(d) Disconnect the injector connector.
(e) Ground the spark plug.

CHECK:

Check if spark occurs while the engine is being cranked.

NOTICE:

To prevent excess fuel from being injected from the injectors during this test, don't crank the engine for more than 5 – 10 seconds at one time.

NG → **Proceed to page IG–1, and continue to troubleshoot.**

OK

Proceed to problem symptoms table on page DI–24.

7. ENGINE OPERATING CONDITION

NOTICE:

The values given below for "Normal Condition" are representative values. So, a vehicle may still be normal even if its value differs from those listed here. So, do not solely depend on the "Normal Condition" here when deciding whether a part is faulty or not.

(a) CARB mandated signals.

Hand–held Tester Display	Measurement Item	Normal Condition*
FUEL SYS #1	Fuel System Bank 1 OPEN: Air–fuel ratio feedback stopped CLOSED: Air–fuel ratio feedback operating	Idling after warming up: CLOSED
CALC LOAD	Calculated Load: Current intake air volume as a proportion of max. intake air volume	Idling: 14.9 – 21.3% Racing without load (2,500rpm): 16.6 – 23.5%
COOLANT TEMP.	Engine Coolant Temp. Sensor Value	After warming up: 80 – 95°C (176 – 203°F)
SHORT FT #1	Short–term Fuel Trim Bank 1	0 ± 20%
LONG FT #1	Long–term Fuel Trim Bank 1	0 ± 20%
ENGINE SPD	Engine Speed	Idling: 650 – 750 rpm
VEHICLE SPD	Vehicle Speed	Vehicle stopped: 0 km/h (0 mph)
IGN ADVANCE	Ignition Advance: Ignition Timing of Cylinder No.1	Idling: BTDC 12.5 – 22.0°
INTAKE AIR	Intake Air Temp. Sensor Value	Equivalent to ambient temp.
MAF	Air Flow Rate Through Mass Air Flow Meter	Idling: 3.3 – 4.7 gm/sec. Racing without load (2,500 rpm): 12.9 – 18.3 gm/sec.
THROTTLE POS	Output Voltage of Throttle Position Sensor Calculated as a percentage: 0 V → 0%, 5 V → 100%	Throttle valve fully closed: 7 – 11 % Throttle valve fully open: 65 – 75 %
O2S B1 S2	Output Voltage of Oxygen Sensor Bank 1 Sensor 2	Driving 50 km/h (31 mph): 0.1 – 0.9 V

*: If no conditions are specifically stated for "Idling", it means the shift lever is at the N or P position, the A/C switch is OFF and all accessory switches are OFF.

(b) TOYOTA Enhanced Signals.

Hand–held Tester Display	Measurement Item	Normal Condition*
MISFIRE RPM	Engine RPM for first misfire range	Misfire 0: 0 rpm
MISFIRE LOAD	Engine load for first misfire range	Misfire 0: 0 g/r
INJECTOR	Fuel injection time for cylinder No.1	Idling: 1.82 – 3.15 ms
IAC DUTY RATIO	Intake Air Control Valve Duty Ratio Opening ratio rotary solenoid type IAC valve	Idling: 22 – 46 %
STARTER SIG	Starter Signal	Cranking: ON

A/C SIG	A/C Switch Signal	A/C ON: ON
PNP SW	Park/Neutral Position Switch Signal	P or N position: ON
STOP LIGHT SW	Stop Light Switch Signal	Stop light switch ON: ON
FC IDL	Fuel Cut Idle: Fuel cut when throttle valve fully closed, during deceleration	Fuel cut operating: ON
FC TAU	Fuel Cut TAU: Fuel cut during very light load	Fuel cut operating: ON
CYL#1 – CYL#6	Abnormal revolution variation for each cylinder	0 %
IGNITION	Total number of ignitions for every 1,000 revolutions	0 – 600
A/C CUT SIG	A/C Cut Signal	A/C S/W OFF: ON
FUEL PUMP	Fuel Pump Signal	Idling: ON
EVAP (PURGE) VSV	EVAP VSV Signal	VSV operating: ON
VAPOR PRESS VSV	Vapor Pressure VSV Signal	VSV operating: ON
TOTAL FT B1	Total Fuel Trim Bank 1: Average value for fuel trim system of bank 1	Idling: 0.8 – 1.2 V

*: If no conditions are specifically stated for ”ldling”, it means the shift lever is at the N or P position, the A/C switch is OFF and all accessory switches are OFF.

DI0RM–18

DIAGNOSTIC TROUBLE CODE CHART

HINT:

Parameters listed in the chart may not be exactly the same as your readings due to the type of instrument or other factors.

If a malfunction code is displayed during the DTC check in the check mode, check the circuit listed in the table below. For details of each code, refer to the ''See page'' under the respective ''DTC No.'' in the DTC chart.

DTC No. (See page)	Detection Item	Trouble Area	MIL*1	Memory
P0031 (DI–25)	Oxygen (A/F) Sensor Heater Circuit Low (Bank 1 Sensor 1)	▲Open in heater circuit of A/F sensor ▲A/F sensor heater ▲ECM	◀	◀
P0032 (DI–25)	Oxygen (A/F) Sensor Heater Circuit High (Bank 1 Sensor 1)	▲Short in heater circuit of A/F sensor ▲A/F sensor heater ▲ECM	◀	◀
P0037 (DI–27)	Oxygen Sensor Heater Control Circuit Low (Bank 1 Sensor 2)	▲Open in heater circuit of heated oxygen sensor ▲Heated oxygen sensor heater ▲ECM	◀	◀
P0038 (DI–27)	Oxygen Sensor Heater Control Circuit High (Bank 1 Sensor 2)	▲Short in heater circuit of heated oxygen sensor ▲Heated oxygen sensor heater ▲ECM	◀	◀
P0100 (DI–29)	Mass or Volume Air Flow Circuit	▲Open or short in mass air flow meter circuit ▲Mass air flow meter ▲ECM	◀	◀
P0101 (DI–224)	Mass or Volume Air Flow Circuit Range/Performance Problem	▲Mass air flow meter	◀	◀
P0102 (DI–29)	Mass or Volume Air Flow Circuit Low Input	▲Open in mass air flow meter circuit ▲Mass air flow meter ▲ECM	◀	◀
P0103 (DI–29)	Mass or Volume Air Flow Circuit High Input	▲Short in mass air flow meter circuit ▲Mass air flow meter ▲ECM	◀	◀
P0110 (DI–34)	Intake Air Temperature Circuit	▲Open or short in intake air temp. sensor circuit ▲Intake air temp. sensor (built in mass air flow meter) ▲ECM	◀	◀
P0112 (DI–34)	Intake Air Temperature Circuit Low Input	▲Open in intake air temp. sensor circuit ▲Intake air temp. sensor (built in mass air flow meter) ▲ECM	◀	◀
P0113 (DI–34)	Intake Air Temperature Circuit High Input	▲Short in intake air temp. sensor circuit ▲Intake air temp. sensor (built in mass air flow meter) ▲ECM	◀	◀
P0115 (DI–38)	Engine Coolant Temperature Circuit	▲Open or short in engine coolant temp. sensor circuit ▲Engine coolant temp. sensor ▲ECM	◀	◀
P0116 (DI–42)	Engine Coolant Temperature Circuit Range/Performance Problem	▲Cooling system ▲Engine coolant temp. sensor	◀	◀
P0117 (DI–38)	Engine Coolant Temperature Circuit Low Input	▲Open in engine coolant temp. sensor circuit ▲Engine coolant temp. sensor ▲ECM	◀	◀
P0118 (DI–38)	Engine Coolant Temperature Circuit High Input	▲Short in engine coolant temp. sensor circuit ▲Engine coolant temp. sensor ▲ECM	◀	◀

P0120 (DI–44)	Throttle Pedal Position Sensor/ Switch "A" Circuit	▲Open or short in throttle position sensor circuit ▲Throttle position sensor ▲ECM	◀	◀
P0121 (DI–51)	Throttle Pedal Position Sensor/ Switch "A" Circuit Range/Performance Problem	▲Throttle position sensor	◀	◀
P0122 (DI–44)	Throttle/Pedal Position Sensor/ Switch "A" Circuit Low Input	▲Open in throttle position sensor circuit ▲Throttle position sensor ▲ECM	◀	◀
P0123 (DI–44)	Throttle/Pedal Position Sensor/ Switch "A" Circuit High Input	▲Short in throttle position sensor circuit ▲Throttle position sensor ▲ECM	◀	◀
P0125 (DI–42)	Insufficient Coolant Temperature for Closed Loop Fuel Control	▲Cooling system ▲Engine coolant temp. sensor	◀	◀
P0128 (DI–52)	Coolant Thermostat (Coolant Temperature Below Thermostat Regulating Temperature)	▲Thermostat ▲Cooling system ▲Engine coolant temp. sensor ▲ECM	¿	¿
P0134 (DI–53)	Oxygen (A/F) Sensor Circuit No Activity Detected (Bank 1 Sensor 1)	▲Open or short in A/F sensor circuit ▲A/F sensor ▲Air induction system ▲Fuel pressure ▲Injector ▲Gas leak in exhaust system ▲PCV valve and hose ▲ECM	◀	◀
P0136 (DI–60)	Oxygen Sensor Malfunction (Bank 1 Sensor 2)	▲Open or short in heated oxygen sensor circuit ▲Heated oxygen sensor	◀	◀
P0171 (DI–62)	System too Lean (Bank 1)	▲Air induction system ▲PCV hose connection ▲PCV valve and hose ▲Injector blockage ▲Mass air flow meter ▲Engine coolant temp. sensor ▲Fuel pressure ▲Gas leak on exhaust system ▲Open or short in oxygen sensor (bank 1 sensor 1, 2) circuit ▲Oxygen sensor (bank 1 sensor 1, 2) ▲ECM	◀	◀
P0172 (DI–62)	System too Rich (Bank 1)		◀	◀
P0220 (DI–44)	Throttle/Pedal Position Sensor/ Switch "B" Circuit	▲Open or short in throttle position sensor circuit ▲Throttle position sensor ▲ECM	◀	◀
P0222 (DI–44)	Throttle/Pedal Position Sensor/ Switch "B" Circuit Low Input	▲Open in throttle position sensor circuit ▲Short in ground circuit ▲Throttle position sensor ▲ECM	◀	◀
P0223 (DI–44)	Throttle/Pedal Position Sensor/ Switch "B" Circuit High Input	▲Short in throttle position sensor circuit (+B circuit) ▲Throttle position sensor ▲ECM	◀	◀

P0300 (DI–69)	Random/Multiple Cylinder Misfire Detected	▲Open or short engine wire ▲Connector connection ▲Vacuum hose connection ▲PCV hose connection ▲PCV valve and hose ▲Ignition system ▲Injector ▲Fuel pressure ▲Mass air flow meter ▲Engine coolant temp. sensor ▲Compression pressure ▲Valve clearance ▲Valve timing	◀*2	◀
P0301 (DI–69)	Cylinder 1 Misfire Detected		◀*2	◀
P0302 (DI–69)	Cylinder 2 Misfire Detected			
P0303 (DI–69)	Cylinder 3 Misfire Detected			
P0304 (DI–69)	Cylinder 4 Misfire Detected			
P0305 (DI–69)	Cylinder 5 Misfire Detected		◀*2	◀
P0306 (DI–69)	Cylinder 6 Misfire Detected		◀*2	◀
P0325 (DI–84)	Knock Sensor 1 Circuit (Bank 1 or Single Sensor)	▲Open or short in knock sensor 1 circuit ▲Knock sensor 1 (looseness) ▲ECM	◀	◀
P0327 (DI–84)	Knock Sensor 1 Circuit Low Input (Bank 1 or Single Sensor)	▲Open in knock sensor 1 circuit ▲Knock sensor 1 ▲ECM	◀	◀
P0328 (DI–84)	Knock Sensor 1 Circuit High Input (Bank 1 or Single Sensor)	▲Short in knock sensor 1 circuit ▲Knock sensor 1 ▲ECM	◀	◀
P0330 (DI–84)	Knock Sensor 2 Circuit (Bank 2)	▲Open or short in knock sensor 2 circuit ▲Knock sensor 2 (looseness) ▲ECM	◀	◀
P0332 (DI–84)	Knock Sensor 2 Circuit Low Input (Bank 2)	▲Open in knock sensor 2 circuit ▲Knock sensor 2 ▲ECM	◀	◀
P0333 (DI–84)	Knock Sensor 2 Circuit High Input (Bank 2)	▲Short in knock sensor 2 circuit ▲Knock sensor 2 ▲ECM	◀	◀
P0335 (DI–88)	Crankshaft Position Sensor ”A” Circuit	▲Open or short in crankshaft position sensor circuit ▲Crankshaft position sensor ▲Crankshaft timing pulley ▲ECM	◀	◀
P0339 (DI–90)	Crankshaft Position Sensor ”A” Circuit Intermittent	▲Open short in crankshaft position sensor circuit ▲Crankshaft position sensor ▲Crankshaft timing pulley ▲ECM	◀	◀
P0340 (DI–91)	Camshaft Position Sensor ”A” Circuit (Bank 1 or Single Sensor)	▲Open or short in camshaft position sensor circuit ▲Camshaft position sensor ▲RH camshaft timing pulley ▲ECM	◀	◀
P0341 (DI–91)	Camshaft Position Sensor ”A” Circuit Range/Performance (Bank 1 or Single Sensor)		◀	◀
P0351 (DI–93)	Ignition Coil ”A” Primary/Secondary Circuit	▲Ignition system ▲Open or short in IGF and IGT circuit from to ECM ▲NO. 1 ignition coil with igniter ▲ECM	◀	◀
P0420 (DI–99)	Catalyst System Efficiency Below Threshold (Bank 1)	▲Gas leak on exhaust system ▲Oxygen sensor (bank 1 sensor 1, 2) ▲Three–way catalytic converter	◀	◀

P0441 (DI–102)	Evaporative Emission Control System Incorrect Purge Flow	▲Vacuum hose cracks, holed, blocked, damaged or disconnected EVAP hose and air inlet line ▲Fuel tank cap incorrectly installed ▲Fuel tank cap cracked or damaged ▲Open or short in vapor pressure sensor circuit ▲Vapor pressure sensor ▲Open or short in VSV circuit for EVAP ▲VSV for EVAP ▲Open or short in VSV circuit for CCV ▲VSV for CCV ▲Fuel tank cracked, holed or damaged ▲Charcoal canister cracked, holed or damaged ▲Fuel tank overfill check valve cracked or damaged ▲ECM	◀	◀
P0442 (DI–102)	Evaporative Emission Control System Leak detected (small leak)	▲Hose or tube cracked, holed, damaged or insufficient seal ▲Fuel tank cap incorrectly installed ▲Fuel tank cap cracked or damaged ▲Vacuum hose cracked, holed, blocked, damaged or disconnected ▲Fuel tank cracked, holed or damaged ▲Charcoal canister cracked, holed or damaged ▲Open or short in vapor pressure sensor circuit ▲Vapor pressure sensor ▲Fuel tank over fill check valve cracked or damaged ▲ECM	◀	◀
P0446 (DI–102)	Evaporative Emission Control System Vent Control Circuit	▲Vacuum hose cracks, holed, blocked, damaged or disconnected EVAP line and air inlet line ▲Fuel tank cap incorrectly installed ▲Fuel tank cap cracked or damaged ▲Open or short in vapor pressure sensor circuit ▲Vapor pressure sensor ▲Open or short in VSV circuit for EVAP ▲VSV for EVAP ▲Open or short in VSV circuit for CCV ▲VSV for CCV ▲Fuel tank cracked, holed or damaged ▲Charcoal canister cracked, holed or damaged ▲Fuel tank overfill check valve cracked or damaged ▲ECM	◀	◀
P0451 (DI–129)	Evaporative Emission Control System Pressure Sensor/Switch Range/Performance	▲Open or short in vapor pressure sensor circuit ▲Vapor pressure sensor ▲ECM	◀	◀
P0452 (DI–129)	Evaporative Emission Control System Pressure Sensor/Switch Low Input	▲Open in vapor pressure sensor circuit ▲Vapor pressure sensor ▲ECM	◀	◀
P0453 (DI–129)	Evaporative Emission Control System Pressure Sensor/Switch High Input	▲Short in vapor pressure sensor circuit ▲Vapor pressure sensor ▲ECM	◀	◀
P0456 (DI–102)	Evaporative Emission Control System Leak detected (very small leak)	▲Same as DTC No. P0442	◀	◀
P0500 (DI–133)	Vehicle Speed Sensor ”A”	▲Combination meter ▲Open or short in vehicle speed sensor circuit ▲Vehicle speed sensor ▲ECM	◀	◀

P0560 (DI–135)	System Voltage	▲Open in back–up power source circuit ▲ECM	◀	◀
P0571 (DI–137)	Brake Switch ”A” Circuit	▲Short in stop light switch signal circuit ▲Stop light switch ▲ECM	◀	◀
P0604 (DI–138)	Internal Control Module Random Access Memory (RAM) Error	▲ECM	◀	◀
P0606 (DI–138)	ECM/PCM Processor	▲ECM	◀	◀
P0607 (DI–138)	Control Module Performance	▲ECM	◀	◀
P0617 (DI–139)	Starter Relay Circuit High	▲Park/neutral position (PNP) switch (A/T) ▲Clutch start switch (M/T) ▲ECM	◀	◀
P0657 (DI–138)	Actuator Supply Voltage Circuit / Open	▲ECM	◀	◀
P0705 (DI–144)	Transmission Range Sensor Circuit Malfunction (PRNDL Input)	▲Short in park/neutral position switch circuit ▲Park/neutral position switch ▲ECM	◀	◀
P0724 (DI–145)	Brake Switch ”B” Circuit High	▲Short in stop light switch signal circuit ▲Stop light switch ▲ECM	◀	◀
P0850 (DI–144)	Park/Neutral Switch Input Circuit Low	▲Open in park/neutral position switch circuit ▲Park/neutral position switch ▲ECM	◀	◀
P1126 (DI–148)	Magnetic Clutch Circuit	▲Short in throttle control motor circuit ▲Throttle control motor ▲ECM	◀	◀
P2102 (DI–151)	Throttle Actuator Control Motor Circuit Low	▲Open in throttle control motor circuit ▲Throttle control motor ▲ECM	◀	◀
P2103 (DI–151)	Throttle Actuator Control Motor Circuit High	▲Short in throttle control motor circuit ▲Throttle control motor ▲ECM	◀	◀
P2111 (DI–154)	Throttle Actuator Control System – Stuck Open	▲Throttle control motor ▲Throttle body	◀	◀
P2112 (DI–154)	Throttle Actuator Control System – Stuck Closed	▲Throttle control motor ▲Throttle body	◀	◀
P2118 (DI–156)	Actuator Control Motor Current Range/Performance	▲Open in ETCS power source circuit ▲ECM	◀	◀
P2119 (DI–158)	Throttle Actuator Control Throttle Body Range/Performance	▲Electric throttle control system ▲ECM	◀	◀
P2120 (DI–159)	Throttle/Pedal Position Sensor/ Switch ”D” Circuit	▲Open or short in accelerator pedal position sensor circuit ▲Accelerator pedal position sensor ▲ECM	◀	◀
P2121 (DI–166)	Throttle/Pedal Position Sensor/ Switch ”D” Circuit Range/Performance	▲Accelerator pedal position sensor	◀	◀
P2122 (DI–159)	Throttle/Pedal Position Sensor/ Switch ”D” Circuit Low Input	▲Open in accelerator pedal position sensor circuit ▲Short in ground circuit ▲Accelerator pedal position sensor ▲ECM	◀	◀

P2123 (DI–159)	Throttle/Pedal Position Sensor/ Switch "D" Circuit High Input	▲Short in accelerator pedal position sensor circuit (+B circuit) ▲Accelerator pedal position sensor ▲ECM	◀	◀
P2125 (DI–159)	Throttle/Pedal Position Sensor/ Switch "E" Circuit	▲Open or short in accelerator pedal position sensor circuit ▲Accelerator pedal position sensor ▲ECM	◀	◀
P2127 (DI–159)	Throttle/Pedal Position Sensor/ Switch "E" Circuit Low Input	▲Open in accelerator pedal position sensor circuit ▲Short in ground circuit ▲Accelerator pedal position sensor ▲ECM	◀	◀
P2128 (DI–159)	Throttle/Pedal Position Sensor/ Switch "E" Circuit High Input	▲Short in accelerator pedal position sensor circuit (+B circuit) ▲Accelerator pedal position sensor ▲ECM	◀	◀
P2135 (DI–44)	Throttle Pedal Position Sensor/ Switch "A" / "B" Voltage Correlation	▲Open or short in throttle position sensor circuit ▲Throttle position sensor ▲ECM	◀	◀
P2138 (DI–159)	Throttle Pedal Position Sensor/ Switch "D" / "E" Voltage Correlation	▲Open or short in throttle position sensor circuit ▲Throttle position sensor ▲ECM	◀	◀
P2195 (DI–167)	Oxygen (A/F) Sensor Signal Stuck Lean (Bank 1 Sensor 1)	▲Open or short in A/F sensor circuit ▲A/F sensor ▲ECM	◀	◀
P2196 (DI–167)	Oxygen (A/F) Sensor Signal Stuck Rich (Bank 1 Sensor 1)		◀	◀
P2237 (DI–167)	Oxygen Sensor Pumping Current Circuit / Open (for A/F sensor) (Bank 1 Sensor 1)	▲Open or short in A/F sensor circuit ▲A/F sensor ▲Air induction system ▲Fuel pressure ▲Injector ▲ECM	◀	◀
P2238 (DI–167)	Oxygen Sensor Pumping Current Circuit / Low (for A/F sensor) (Bank 1 Sensor 1)	▲Open in A/F sensor circuit ▲A/F sensor ▲Air induction system ▲Fuel pressure ▲Injector ▲ECM	◀	◀
P2239 (DI–167)	Oxygen Sensor Pumping Current Circuit / High (for A/F sensor) (Bank 1 Sensor 1)	▲Short in A/F sensor circuit ▲A/F sensor ▲Air induction system ▲Fuel pressure ▲Injector ▲ECM	◀	◀
P2A00 (DI–177)	A/F Sensor Circuit Slow Response (Bank 1 Sensor 1)	▲Open or short in A/F sensor circuit ▲A/F sensor ▲Air induction system ▲Fuel pressure ▲Injector ▲ECM	◀	◀

*: ◀ ... MIL lights up. – ... MIL does not lights up.

DI0RN–15

PARTS LOCATION

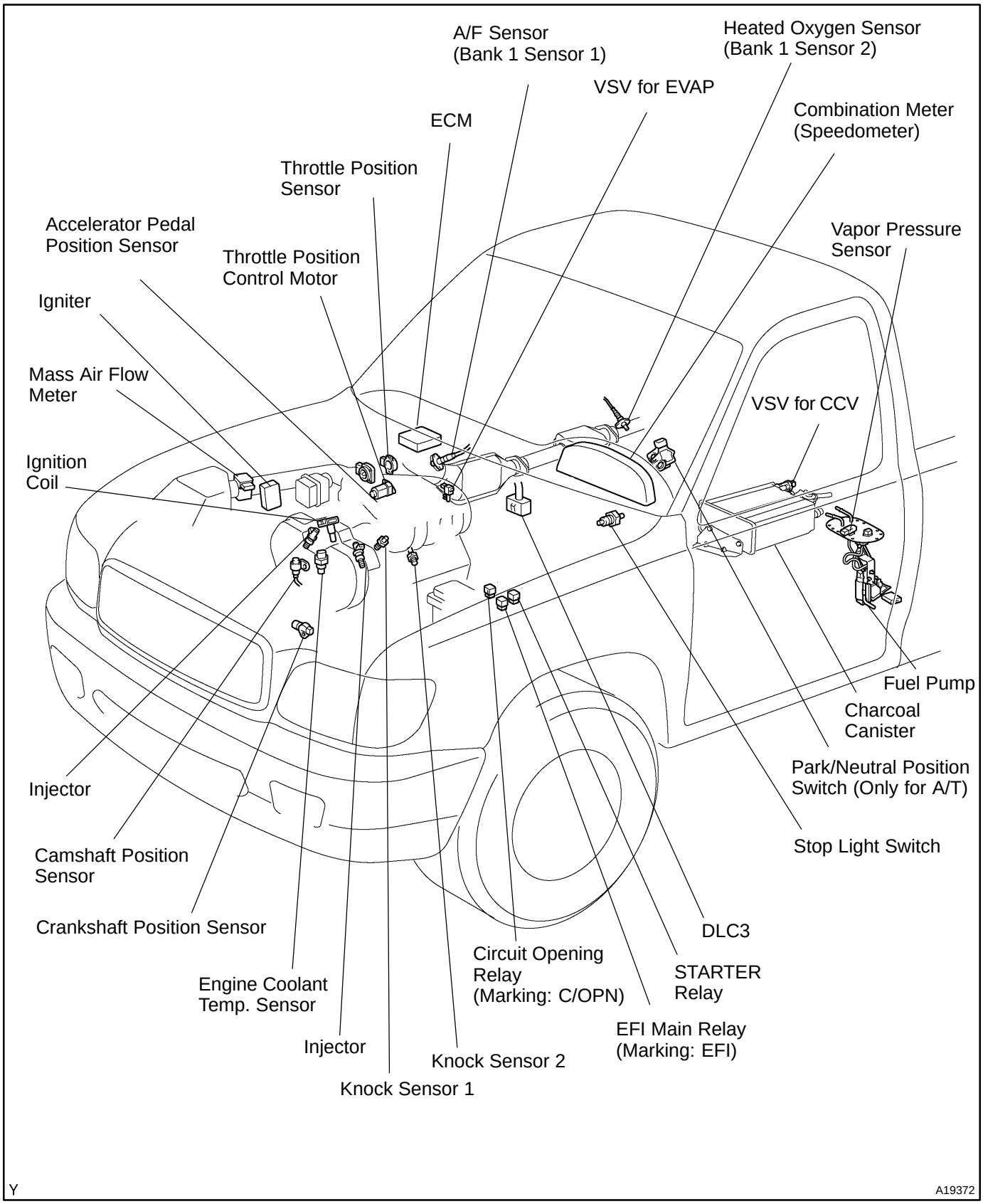

DI8CR–03

TERMINALS OF ECM

ECM Terminals

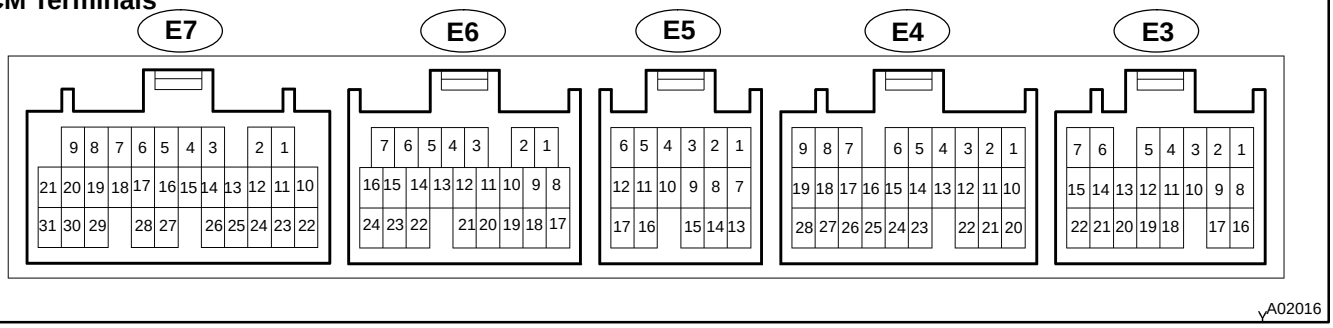

Symbols (Terminal No.)	Wiring Color	Condition	STD Voltage (V)
BATT (E3–16) – E1 (E6–17)	B–R – BR	Always	9 – 14
+B (E3–1) – E1 (E6–17)	W–L – BR	IG switch ON	9 – 14
VC (E7–25) – E2 (E7–11)	G–B – B–W	IG switch ON	4.5 – 5.5
VTA (E7–15) – E2 (E7–11)	B–Y – B–W	IG switch ON, Throttle valve fully closed	0.3 – 1.0
		IG switch ON, Throttle valve fully open	2.7 – 5.2
VTA2 (E5–4) – E2 (E7–11)	R–B – B–W	IG switch ON, Throttle valve fully closed	0.3 – 1.0
		IG switch ON, Throttle valve fully open	2.7 – 5.2
VPA (E5–10) – E2 (E7–11)	R–W – B–W	IG switch ON, Throttle valve fully closed	0.3 – 1.0
		IG switch ON, Throttle valve fully open	2.7 – 5.2
VPA2 (E5–15) – E2 (E7–11)	R – B–W	IG switch ON, Throttle valve fully closed	0.3 – 1.0
		IG switch ON, Throttle valve fully open	2.7 – 5.2
VG (E7–12) – E2 (E7–11)	R–Y – B–W	Idling , A/C switch OFF	1.1 – 1.5
THA (E7–13) – E2 (E7–11)	Y–G – B–W	Idling, Intake air temp. 20˚C (68˚F)	0.5 – 3.4
THW (E7–18) – E2 (E7–11)	G–Y – B–W	Idling, Engine coolant temp. 80˚C (176˚F)	0.2 – 1.0
STA (E3–7) – E1 (E6–17)	B – BR	Cranking	6.0 or more
#10 (E6–6) – E01 (E7–4)	R – W–B	IG switch ON	9 – 14
		Idling	Pulse generation (See page DI–69)
#20 (E6–5) – E01 (E7–4)	W – W–B	IG switch ON	9 – 14
		Idling	Pulse generation (See page DI–69)
#30 (E6–4) – E01 (E7–4)	G – W–B	IG switch ON	9 – 14
		Idling	Pulse generation (See page DI–69)
#40 (E6–3) – E01 (E7–4)	R–B – W–B	IG switch ON	9 – 14
		Idling	Pulse generation (See page DI–69)
#50 (E6–1) – E01 (E7–4)	L – W–B	IG switch ON	9 – 14
		Idling	Pulse generation (See page DI–69)
#60 (E6–8) – E01 (E7–4)	Y – W–B	IG switch ON	9 – 14
		Idling	Pulse generation (See page DI–69)
IGT1 (E6–11) – E1 (E6–17)	B–L – BR	Idling	Pulse generation (See page DI–93)

IGT2 (E6–10) – E1 (E6–17)	R–L – BR	Idling	Pulse generation (See page DI–93)
IGT3 (E6–9) – E1 (E6–17)	LG – BR	Idling	Pulse generation (See page DI–93)
IGF (E6–2) – E1 (E6–17)	B–Y – BR	IG switch ON	4.5 – 5.5
		Idling	Pulse generation (See page DI–93)
G2 (E6–13) – NE– (E6–21)	L – G	Idling	Pulse generation (See page DI–88)
NE+ (E6–12) – NE– (E6–21)	R – G	Idling	Pulse generation (See page DI–88)
FC (E3–22) – E1 (E6–17)	Y – BR	IG switch ON	9 – 14
		Idling	0 – 3.0
CCV (E6–19) – E01 (E7–4)	L–W – W–B	IG switch ON	9 – 14
EVP1 (E6–14) – E01 (E7–4)	G–W – W–B	IG switch ON	9 – 14
EVP1 (E6–14) – E1 (E6–17)	G–W – BR	IG switch ON	9 – 14
AF1+ (E7–14) – E1 (E6–17)	V – BR	IG switch ON	3.3
AF1– (E7–26) – E1 (E6–17)	P – BR	IG switch ON	3.0
HAF1 (E7–21) – E04 (E7–8)	Y – W–B	Idling	Below 3.0
		IG switch ON	9 – 14
OX2B (E6–27) – E1 (E6–17)	R – BR	Maintain engine speed at 2,500 rpm for 2 min. after warming up	Pulse generation (See page DI–60)
HT2B (E7–29) – E03 (E7–7)	R–W – W–B	Idling	Below 3.0
		IG switch ON	9 – 14
KNK1 (E7–23) – E1 (E6–17)	B – BR	Idling	Pulse generation (See page DI–84)
KNK2 (E7–22) – E1 (E6–17)	GR – BR	Idling	Pulse generation (See page DI–84)
NSW (E4–3) – E1 (E6–17)	P – BR	IG switch ON, Other shift position in P or N	9 – 14
		IG switch ON, Shift position in P or N	0 – 3.0
SP1 (E3–6) – E1 (E6–17)	G–O – BR	IG switch ON, Rotate driving wheel slowly	Pulse generation (See page DI–133)
W (E3–2) – E1 (E6–17)	V–G – BR	Idling	9 – 14
		IG switch ON	Below 3.0
PSW (E6–18) – E1 (E6–17)	Y–R – BR	IG switch ON	9 – 14
ACT (E3–3) – E1 (E6–17)	L–B – BR	A/C switch OFF	9 – 14
		A/C switch ON at idling	5 or more
AC1 (E3–9) – E1 (E6–17)	L–Y – BR	A/C switch ON at idling	Below 2.0
		A/C switch OFF	9 – 14
PTNK (E7–24) – E1 (E6–17)	R–L – BR	IG switch ON	3.0 – 3.6
SIL (E3–14) – E1 (E6–17)	W – BR	During charge of gears	Pulse generation
STP (E3–20) – E1 (E6–17)	G–W – BR	IG switch ON, Brake pedal is depressed	7.5 – 14
		IG switch ON, Brake pedal is released	Below 1.5
*1 ST1– (E4–9) – E1 (E6–17)	L–R – BR	IG switch ON, Brake pedal is depressed	7.5 – 14
		IG switch ON, Brake pedal is released	Below 1.5
MREL (E3–4) – E1 (E6–17)	B–Y – BR	IG switch ON	9 – 14
IGSW (E3–15) – E1 (E6–17)	B–O – BR	IG switch ON	9 – 14

M+ (E7–9) – E1 (E6–17) M– (E7–31) – E1 (E6–17)	G – BR R – BR	Idling	Pulse generation (See page DI–151)
CL+ (E5–2) – CL– (E5–8)	Y – L	Idling	Pulse generation (See page DI–151)

HINT:

*1: w/Cruise Control System

DI0RP–15

PROBLEM SYMPTOMS TABLE

Symptom	Suspected Area	See page
Engine does not crank (Does not start)	8. Starter 9. Starter relay	ST–16 ST–18
No initial combustion (Does not start)	1. ECM power source circuit 2. Fuel pump control circuit 3. Engine control module (ECM)	DI–183 DI–187 IN–27
No complete combustion (Does not start)	1. Fuel pump control circuit	DI–187
Engine cranks normally (Difficult to start)	1. Starter signal circuit 2. Fuel pump control circuit 3. Compression	DI–139 DI–187 EM–3
Cold engine (Difficult to start)	1. Starter signal circuit 2. Fuel pump control circuit	DI–139 DI–187
Hot engine (Difficult to start)	1. Starter signal circuit 2. Fuel pump control circuit	DI–139 DI–187
High engine idle speed (Poor idling)	1. A/C signal circuit (Compressor circuit) 2. ECM power source circuit	IN–27 DI–183
Low engine idle speed (Poor idling)	1. A/C signal circuit (Compressor circuit) 2. Fuel pump control circuit	IN–27 DI–187
Rough idling (Poor idling)	1. Compression 2. Fuel pump control circuit	EM–3 DI–187
Hunting (Poor idling)	1. ECM power source circuit 2. Fuel pump control circuit	DI–183 DI–187
Hesitation/Poor acceleration (Poor driveability)	1. Fuel pump control circuit 2. A/T faulty	DI–187 DI–400
Surging (Poor driveability)	1. Fuel pump control circuit	DI–187
Engine stalls soon after starting	1. Fuel pump control circuit	DI–187
Engine stalls during A/C operation	1. A/C signal circuit (Compressor circuit) 2. ECM	IN–27 IN–27

DIA8S–01

CIRCUIT INSPECTION

DTC	P0031	Oxygen (A/F) Sensor Heater Control Circuit Low (Bank 1 Sensor 1)

DTC	P0032	Oxygen (A/F) Sensor Heater Control Circuit High (Bank 1 Sensor 1)

CIRCUIT DESCRIPTION

Refer to DTC P2195 on page DI–167.

DTC No.	DTC Detection Condition	Trouble Area
P0031	When the heater operates, heater current exceeds 19.7 A	▲Open or short in heater circuit of A/F sensor ▲A/F sensor heater ▲ECM
P0032	Heater current is 3 A or less when the heater operates	

HINT:
Sensor 1 refers to the sensor closest to the engine body.

WIRING DIAGRAM

Refer to DTC P0134 on page DI–53.

INSPECTION PROCEDURE

HINT:
Read freeze frame data using the hand–held tester or OBD II scan tool, as freeze frame dada records the engine conditions when a malfunction is detected. When troubleshooting, it is useful for determining whether the vehicle was running or stopped, the engine was warmed up or not, the air–fuel ratio was lean or rich, etc. at the time of the malfunction.

1	**Check voltage between terminal HTF1 of ECM connector and body ground.**

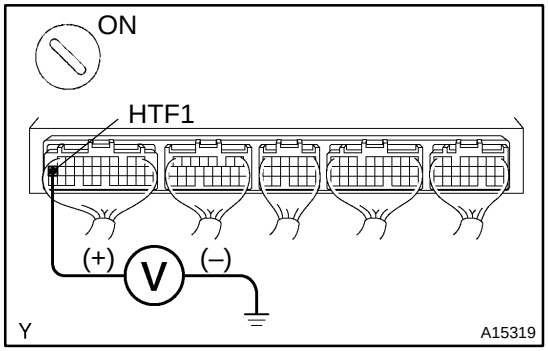

PREPARATION:
(a) Remove the glove compartment (See page SF–48).
(b) Turn the ignition switch ON.

CHECK:
Measure the voltage between terminal HTF1 of the ECM connector and body ground.

OK:
Voltage: 9 – 14 V

OK	**Check and replace ECM (See page IN–27).**

NG

2	Check resistance of A/F sensor heater (See page SF–46).

NG → Replace A/F sensor.

OK

Check and repair harness or connector between EFI main relay (Marking: EFI) and A/F sensor, and A/F sensor and ECM (See page IN–27).

DTC	P0037	Oxygen Sensor Heater Control Circuit Low (Bank 1 Sensor 2)

DTC	P0038	Oxygen Sensor Heater Control Circuit High (Bank 1 Sensor 2)

CIRCUIT DESCRIPTION

Refer to DTC P0136 on page DI–60.

DTC No.	DTC Detection Condition	Trouble Area
P0037	Heater current 0.25 A or less when the heater operates	▲Open or short in heater circuit of heated oxygen sensor ▲Heated oxygen sensor heater ▲ECM
P0038	When the heater operates, heater current exceeds 2 A	

HINT:

- ▲ Sensor 1 refers to the sensor closest to the engine body.
- ▲ Sensor 2 refers to the sensor farthest from the engine body.

WIRING DIAGRAM

Refer to DTC P0134 on page DI–53.

INSPECTION PROCEDURE

HINT:

Read freeze frame data using the hand–held tester or OBD II scan tool, as freeze frame data records the engine conditions when a malfunctions is detected. When troubleshooting, it is useful for determining whether the vehicle was running or stopped, the engine was warmed up or not, the air–fuel ratio was lean or rich, etc. at the time of the malfunction.

1	Check voltage between terminals HT2B of ECM connectors and body ground.

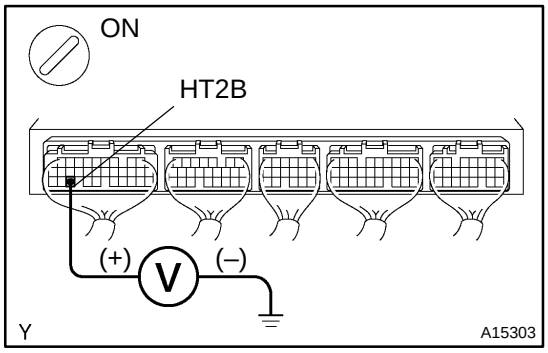

PREPARATION:

(a) Remove the glove compartment (See page SF–49).

(b) Turn the ignition switch ON.

CHECK:

Measure the voltage between terminal HT2B of the ECM connector and the body ground.

HINT:

Connect terminal HT2B to bank 1 sensor 2.

OK:

Voltage: 9 – 14 V

OK	Check and replace ECM (See page IN–27)

NG

2	Check resistance of heated oxygen sensor heater (See page SF–47).

NG → Replace heated oxygen sensor.

OK →

Check and repair harness or connector between EFI main relay (Marking: EFI) and heated oxygen sensor, and heated oxygen sensor and ECM (See page IN–27).

DIA8U–01

DTC	P0100	Mass or Volume Air Flow Circuit

DTC	P0102	Mass or Volume Air Flow Circuit Low Input

DTC	P0103	Mass or Volume Air Flow Circuit High Input

CIRCUIT DESCRIPTION

The mass air flow meter uses a platinum hot wire. The hot wire mass air flow meter consists of a platinum hot wire, thermistor and a control circuit installed in a plastic housing. The hot wire mass air flow meter works in the principle that the hot wire and thermistor located in the intake air bypass of the housing detect any changes in the intake air temperature. The hot wire is maintained at the set temperature by controlling the current flow through the hot wire. This current flow is then measured as the output voltage of the mass air flow meter.

The circuit is constructed so that the platinum hot wire and thermistor provide a bridge circuit, with the power transistor controlled so that the potential of A and B remains equal to maintain the set temperature.

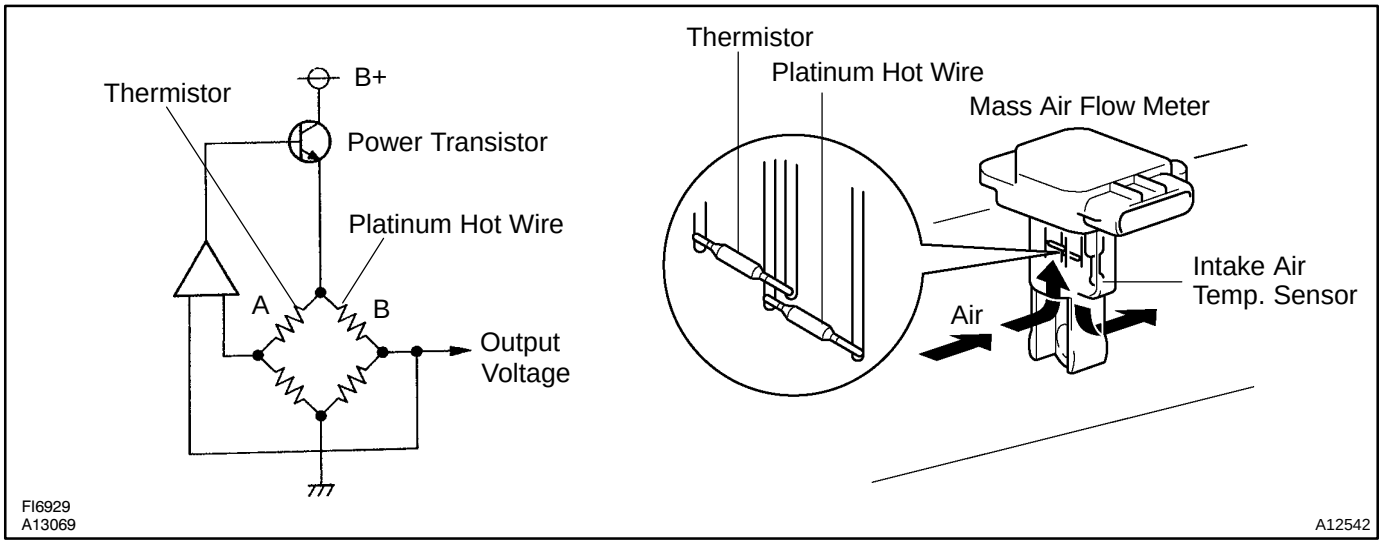

DTC No.	DTC Detection Condition	Trouble Area
P0100	Open or short in mass air flow meter circuit with more than 3 sec. engine speed 4,000 rpm or less	▲Mass air flow meter circuit ▲Mass air flow meter ▲ECM
P0102	Open in mass air flow meter circuit with more than 3 sec. engine speed 4,000 rpm or less	
P0103	Short in mass air flow meter circuit with more than 3 sec. engine speed 4,000 rpm or less	

HINT:

After confirming DTC P0100, P0102 or P0103 use the hand–held tester or the OBD II scan tool to confirm the mass air flow ratio from the CURRENT DATA.

Mass Air Flow Value (gm/sec.)	Malfunction
Approx. 0	▲Mass air flow meter power source circuit open ▲VG circuit open or short
271.0 or more (idling after warmed up)	▲EVG circuit open

WIRING DIAGRAM

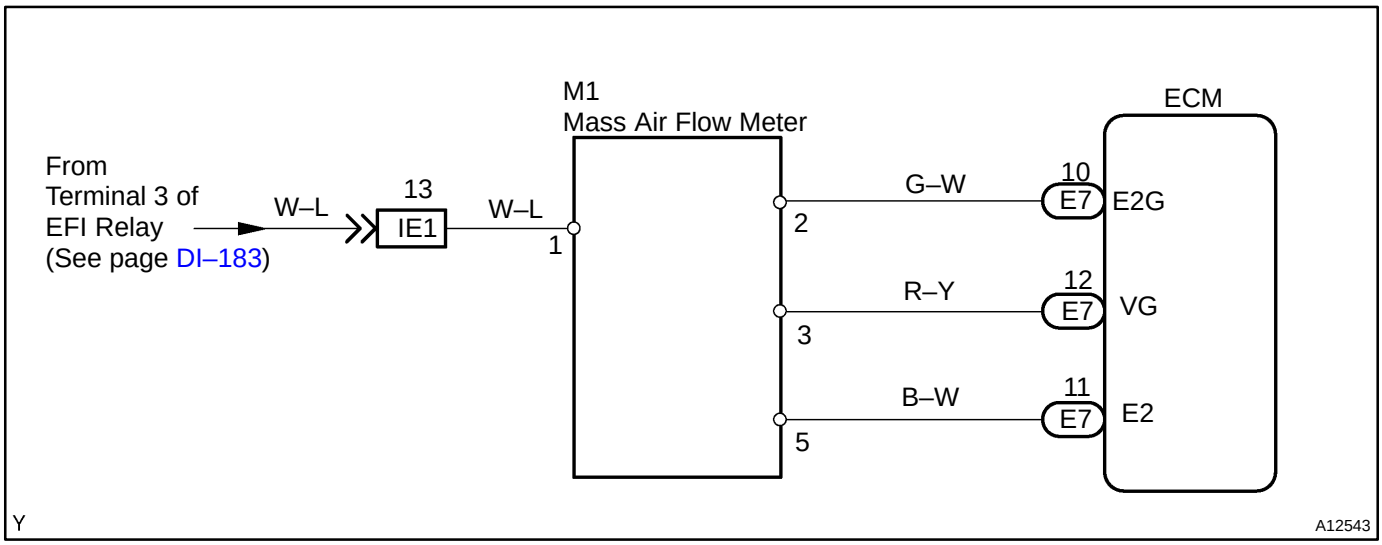

INSPECTION PROCEDURE

HINT:

- ▲ If different DTCs that are related to different systems are output simultaneously while terminal E2 is used as a ground terminal, terminal E2 may be open.
- ▲ Read freeze frame data using hand–held tester or OBD II scan tool, as freeze frame data records the engine conditions when a malfunction is detected. When troubleshooting, it is useful for determining whether the vehicle was running or stopped, the engine was warmed up or not, the air–fuel ratio was lean or rich, etc. at the time of the malfunction.

1	**Connect OBD II scan tool or hand–held tester, and read value of mass air flow rate.**

PREPARATION:

(a) Connect the OBD II scan tool or hand–held tester to the DLC3.
(b) Turn the ignition switch ON and push the OBD II scan tool or hand–held tester main switch ON.
(c) Start the engine.

CHECK:

Read the mass air flow rate on the OBD II scan tool or hand–held tester.

RESULT:

	Type I	Type II
Mass Air Flow Rate (gm/sec.)	Approx. 0	271.0 or more

Type II → **Go to step 5.**

Type I

2	Check voltage of mass air flow meter power source.

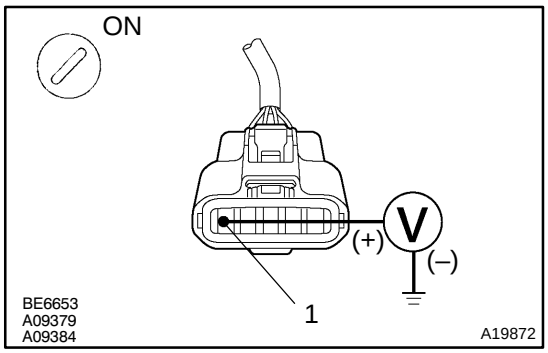

PREPARATION:

(a) Disconnect the mass air flow meter connector.

(b) Turn the ignition switch ON.

CHECK:

Measure the voltage between terminal 1 of the mass air flow meter connector and the body ground.

OK:

Voltage: 9 – 14 V

NG	Check for open in harness and connector between EFI main relay (Marking: EFI) and mass air flow meter (See page IN–27).

OK

3	Check voltage between terminal VG of ECM connector and body ground.

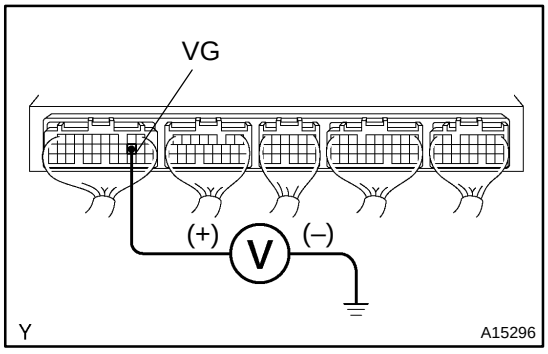

PREPARATION:

(a) Remove the glove compartment (See page SF–49).

(b) Start the engine.

CHECK:

Measure the voltage between terminal VG of the ECM connector and the body ground while the engine is idling.

OK:

Voltage:
0.5 – 3.0 V (P or N position and A/C switch OFF)

OK	Check and replace ECM (See page IN–27).

NG

4	**Check for open and short in harness and connector between mass air flow meter and ECM (See page IN–27).**

NG → **Repair or replace harness or connector.**

OK

Replace mass air flow meter.

5	**Check continuity between terminal E2G of ECM connector and body ground.**

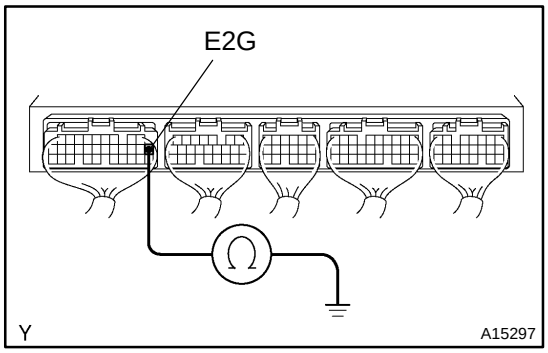

PREPARATION:
Remove the glove compartment (See page SF–49).
CHECK:
Check the continuity between terminal E2G of the ECM connector and the body ground.
OK:

Continuity (1 Ω or less)

NG → **Check and replace ECM (See page IN–27).**

OK

6	**Check for open in harness and connector between mass air flow meter and ECM (See page IN–27).**

NG → **Repair or replace harness or connector.**

OK

Replace mass air flow meter.

DI0RR–15

DTC	P0101	Mass or Volume Air Flow Circuit Range/ Performance Problem

CIRCUIT DESCRIPTION

Refer to DTC P0100 on page DI–29.

DTC No.	DTC Detection Condition	Trouble Area
P0101	After engine is warmed up, conditions (a) and (b) continue with engine speed at 900 rpm or less: (2 trip detection logic) (a) Throttle valve fully closed (b) Mass air flow meter output > 2.2 V	▲Mass air flow meter
	Conditions (a) and (b) continue with engine speed at 1,500 rpm or more: (2 trip detection logic) (a) VTA 0.63 V (b) Mass air flow meter output < 1.06 V	

INSPECTION PROCEDURE

HINT:

Read freeze frame data using the hand–held tester or OBD II scan tool, as freeze frame data records the engine conditions when a malfunction is detected. When troubleshooting, it is useful for determining whether the vehicle was running or stopped, the engine was warmed up or not, the air–fuel ratio was lean or rich, etc. at the time of the malfunction.

1	Are there any other codes (besides DTC P0101) being output?

NO → Replace mass air flow meter.

YES

Go to relevant DTC chart (See page DI–14).

DIA8W–01

DTC	P0110	Intake Air Temperature Circuit

DTC	P0112	Intake Air Temperature Circuit Low Input

DTC	P0113	Intake Air Temperature Circuit High Input

CIRCUIT DESCRIPTION

Fig. 1

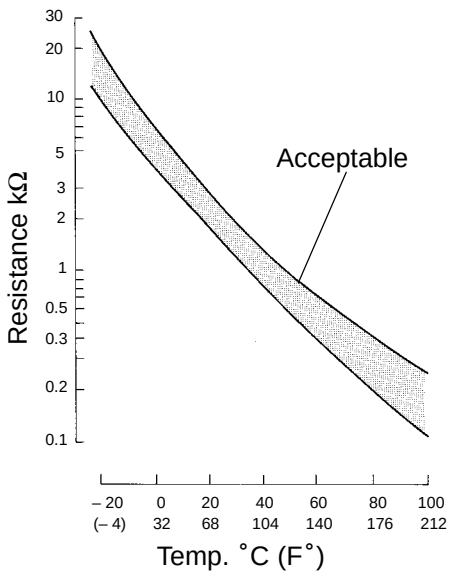

The intake air temperature sensor is built in the mass air flow meter and senses the intake air temperature.
A thermistor built in the sensor changes the resistance value according to the intake air temperature.
The lower the intake air temperature is, the greater the thermistor resistance value becomes, and the higher the intake air temperature is, the lower the thermistor resistance value becomes (See Fig. 1).
The intake air temperature sensor is connected to the ECM (See below). The 5 V power source voltage in the ECM is applied to the intake air temperature sensor from terminal THA via resistor R. That is, resistor R and the intake air temperature sensor are connected in series. When the resistance value of the intake air temperature sensor changes in accordance with changes in the intake air temperature, the potential at terminal THA also changes. Based on this signal, the ECM increases the fuel injection volume to improve driveability during cold engine operation. If the ECM detects the DTC P0110, it operates the fail safe function in which the intake air temperature is assumed to be 20˚C (68˚F).

DTC No.	Proceed to	DTC Detection Condition	Trouble Area
P0110	Step 1	Open or short in intake air temp. sensor circuit for 0.5 sec.	▲Intake air temp. sensor circuit ▲Intake air temp. sensor (built in mass air flow meter) ▲ECM
P0112	Step 2	Open in intake air temp. sensor circuit for 0.5 sec.	
P0113	Step 4	Short in intake air temp. sensor circuit for 0.5 sec.	

HINT:
After confirming DTC P0110, P0112 and P0113 use the OBD II scan tool or hand–held tester to confirm the intake air temperature from the CURRENT DATA.

Temperature Displayed	Malfunction
–40˚C (–40˚F)	Open circuit
140˚C (284˚F) or more	Short circuit

WIRING DIAGRAM

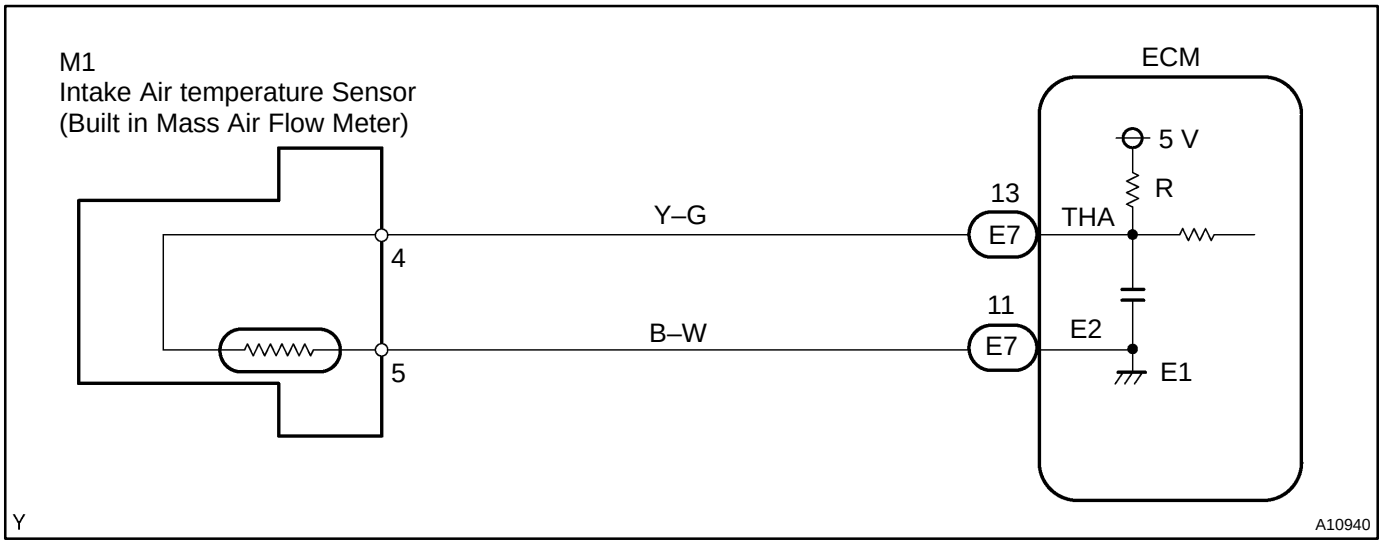

INSPECTION PROCEDURE

HINT:

- If different DTCs that are related to different systems are output simultaneously while terminal E2 is used as a ground terminal, terminal E2 may be open.
- Read freeze frame data using the hand–held tester or OBD II scan tool, as freeze frame data records the engine conditions when a malfunction is detected. When troubleshooting, it is useful for determining whether the vehicle was running or stopped, the engine was warmed up or not, the air–fuel ratio was lean or rich, etc. at the time of the malfunction.

1	**Connector OBD II scan tool or hand–held tester, and read value of intake air temperature**

PREPARATION:

(a) Connect the OBD II scan tool or hand–held tester to the DLC3.

(b) Turn the ignition switch ON and push the OBD II scan tool or hand–held tester main switch ON.

CHECK:

Read the temperature value on the OBD II scan tool or hand–held tester.

OK:

Same value as actual intake air temperature

HINT:

- If there is open circuit, OBD II scan tool or hand–held tester indicates –40°C (–40°F).
- If there is short circuit, OBD II scan tool or hand–held tester indicates 140°C (284°F) or more.

NG → **–40°C (–40°F) ... Go to step 2.**
140°C (284°F) or more ... Go to step 4.

OK

Check for intermittent problems (See page DI–3).

2	Check for open in harness or ECM.

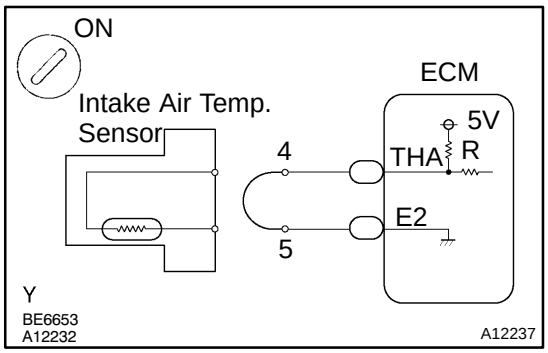

PREPARATION:

(a) Disconnect the mass air flow meter connector.
(b) Connect the sensor wire harness terminals together.
(c) Turn the ignition switch ON.

CHECK:

Read the temperature value on the OBD II scan tool or hand–held tester.

OK:

Temperature value: 140°C (284°F) or more

OK	Confirm good connection at sensor. If OK, replace mass air flow meter.

NG

3	Check for open in harness or ECM.

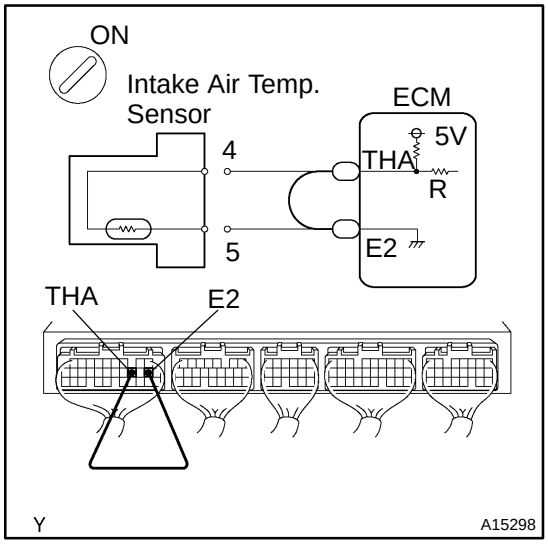

PREPARATION:

(a) Remove the glove compartment (See page SF–49).
(b) Connect terminals THA and E2 of the ECM connector together.

HINT:

The mass air flow meter connector is disconnected. Before checking, do a visual and contact check of the pressure of the ECM connector (See page IN–27).

CHECK:

Read the temperature value on the OBD II scan tool or hand–held tester.

OK:

Temperature value: 140°C (284°F) or more

OK	Open in harness between terminals E2 and THA, repair or replace harness.

NG

Confirm good connection at ECM. If OK, check and replace ECM (See page IN–27).

4	Check for short in harness and ECM.

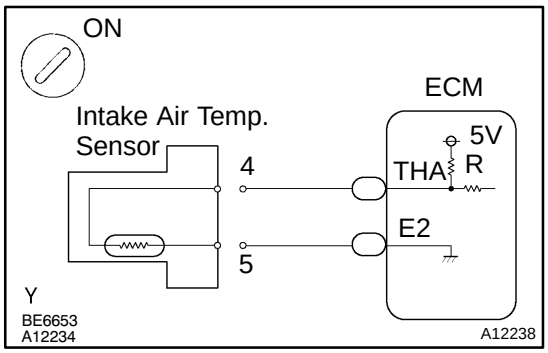

PREPARATION:

(a) Disconnect the mass air flow meter connector.

(b) Turn the ignition switch ON.

CHECK:

Read the temperature value on the OBD II scan tool or hand–held tester.

OK:

Temperature value: – 0°C (–40°F)

OK	Replace mass air flow meter.

NG

5	Check for short in harness or ECM.

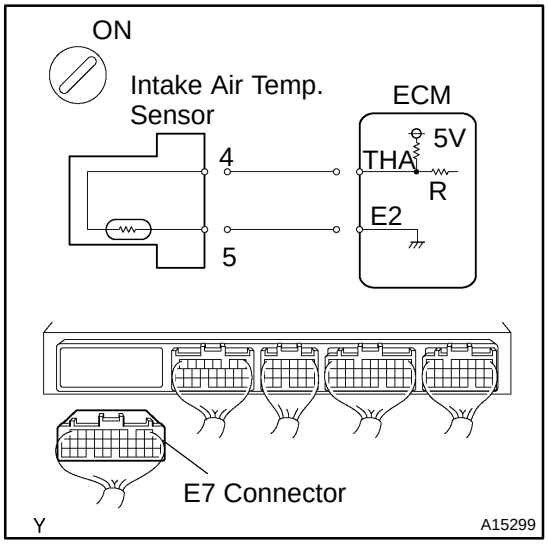

PREPARATION:

(a) Remove the glove compartment (See page SF–49).

(b) Disconnect the E7 connector from the ECM.

HINT:

The mass air flow meter connector is disconnected.

(c) Turn the ignition switch ON.

CHECK:

Read the temperature value on the OBD II scan tool or hand–held tester.

OK:

Temperature value: – 0°C (–40°F)

OK	Repair or replace harness or connector.

NG

Check and replace ECM (See page IN–27).

DIA8Y–01

DTC	P0115	Engine Coolant Temperature Circuit

DTC	P0117	Engine Coolant Temperature Circuit Low Input

DTC	P0118	Engine Coolant Temperature Circuit High Input

CIRCUIT DESCRIPTION

A thermistor built in the engine coolant temperature sensor changes the resistance value according to the engine coolant temperature.

The structure of the sensor and connection to the ECM is the same as those of the intake air temperature circuit malfunction shown on page DI–34.

DTC No.	Proceed to	DTC Detection Condition	Trouble Area
P0115	Step 1	Open or short in engine coolant temp. sensor circuit for 0.5 sec.	▲Engine coolant temp. sensor circuit ▲Engine coolant temp. sensor ▲ECM
P0117	Step 2	Open in engine coolant temp. sensor circuit for 0.5 sec.	
P0118	Step 4	Short in engine coolant temp. sensor circuit for 0.5 sec.	

HINT:

After confirming DTC P0115, P0117 or P0118 use the hand–held tester or OBD II scan tool to confirm the engine coolant temperature from the CURRENT DATA.

Temperature Displayed	Malfunction
–40°C (–40°F)	Open circuit
140° (284°F) or more	Short circuit

WIRING DIAGRAM

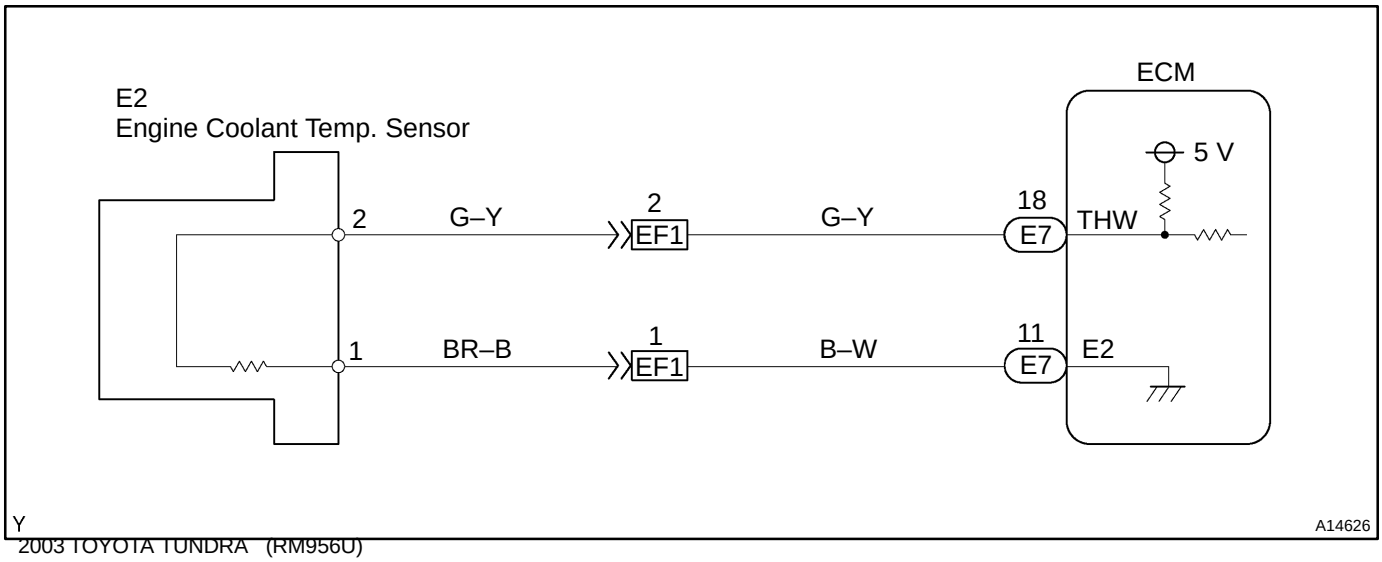

INSPECTION PROCEDURE

HINT:

- If different DTCs that are related to different systems are output simultaneously while terminal E2 is used as a ground terminal, terminal E2 may be open.
- Read freeze frame data using the hand–held tester or OBDII scan tool, as freeze frame data records the engine conditions when a malfunction is detected. When troubleshooting, it is useful for determining whether the vehicle was running or stopped, the engine was warmed up or not, the air–fuel ratio was lean or rich, etc. at the time of the malfunction.

1	**Connect OBD II scan tool or hand–held tester, and read value of engine coolant temperature.**

PREPARATION:

(a) Connect the OBD II scan tool or hand–held tester to the DLC3.

(b) Turn the ignition switch ON and push the OBD II scan tool or hand–held tester main switch ON.

CHECK:

Read the temperature value on the OBD II scan tool or hand–held tester.

OK:

Same as actual engine coolant temperature.

HINT:

- If there is open circuit, OBD II scan tool or hand–held tester indicates –40°C (–40°F).
- If there is short circuit, OBD II scan tool or hand–held tester indicates 140°C (284°F) or more.

NG → **–40°C (–40°F) ... Go to step 2.**
140°C (284°F) or more ... Go to step 4.

OK

Check for intermittent problems
(See page DI–3).

2	Check for open in harness or ECM.

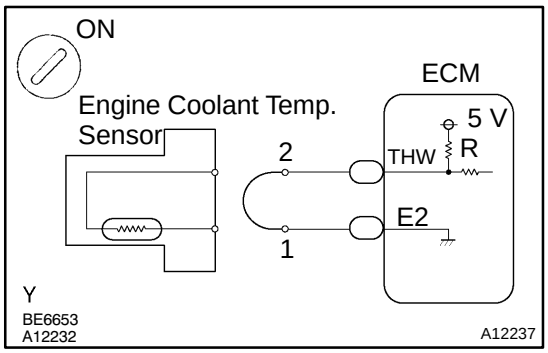

PREPARATION:

(a) Disconnect the engine coolant temperature sensor connector.

(b) Connect the sensor wire harness terminals together.

(c) Turn the ignition switch ON.

CHECK:

Read the temperature value on the OBD II scan tool or hand–held tester.

OK:

Temperature value: 140°C (284°F) or more

OK	Confirm good connection at sensor. If OK, replace engine coolant temperature sensor.

NG

3	Check for open in harness or ECM.

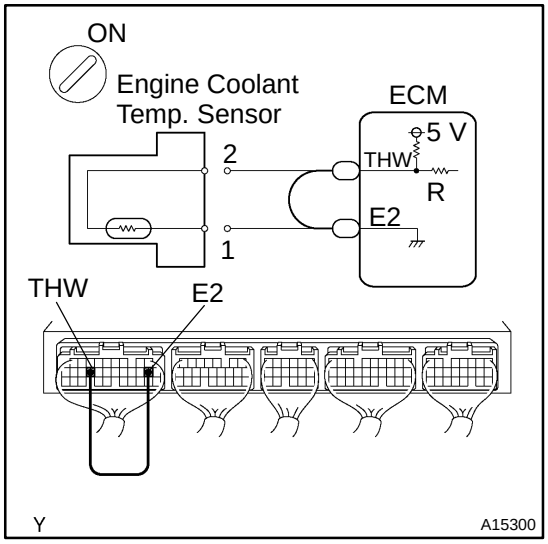

PREPARATION:

(a) Remove the glove compartment (See page SF–49).

(b) Connect terminals THW and E2 of the ECM connector.

HINT:

The engine coolant temperature sensor connector is disconnected. Before checking, do a visual and contact pressure check of the pressure of the ECM connector (See page IN–27).

(c) Turn the ignition switch ON.

CHECK:

Read the temperature value on the OBD II scan tool or hand–held tester.

OK:

Temperature value: 140°C (284°F) or more

OK	Open in harness between terminals E2 and THW, repair or replace harness.

NG

Confirm good connection at ECM. If OK, check and replace ECM (See page IN–27).

4	Check for short in harness and ECM.

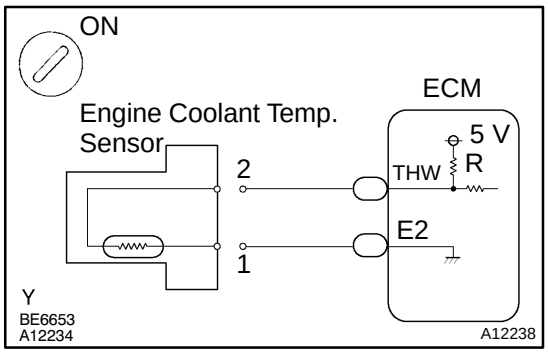

PREPARATION:

(a) Disconnect the engine coolant temperature sensor connector.

(b) Turn the ignition switch ON.

CHECK:

Read the temperature value on the OBD II scan tool or hand–held tester.

OK:

Temperature value: –40°C (–40°F)

OK	Replace engine coolant temperature sensor (See page SF–38).

NG

5	Check for short in harness or ECM.

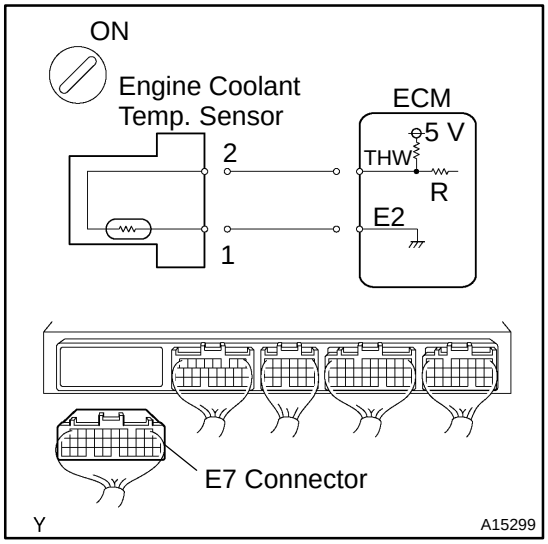

PREPARATION:

(a) Remove the glove compartment (See page SF–49).

(b) Disconnect the E7 connector from the ECM.

HINT:

The engine coolant temperature sensor connector is disconnected.

(c) Turn the ignition switch ON.

CHECK:

Read the temperature value on the OBD II scan tool or hand–held tester.

OK:

Temperature value: –40°C (–40°F)

OK	Repair or replace harness or connector.

NG

Check and replace ECM (See page IN–27).

DIA8Z–01

DTC	P0116	Engine Coolant Temperature Circuit Range/ Performance Problem

DTC	P0125	Insufficient Coolant Temperature for Closed Loop Fuel Control

CIRCUIT DESCRIPTION

Refer to DTC P0115 on page DI–38.

DTC No.	DTC Detection Condition	Trouble Area
P0116	When THW ⍁ 35°C (95°F) and 60°C (140°F), THA < –6.7°C (19.4°F) when starting engine, conditions (a) and (b) continue: (2 trip detection logic) (a) Vehicle speed is changing (Not stable) (b) Water temp. change is lower than 3°C (37.4°F) from water temp. since when starting engine	▲Cooling system ▲Engine coolant temp. sensor
	In case that reading value of water temp. sensor will not change more than 1°C (33.8°F) even after repeating 6 trips (detection logic) of adjusting speed pattern with THW more than 60°C (140°F) when starting engine	
P0125	If THW < –6.7°C (20°F) or THA < –6.7°C (20°F) 20 min. or more after starting engine, engine coolant temp. sensor value is 20°C (68°F) or less (2 trip detection logic)	
	If THW ⍁ –6.7°C (20°F) and THA < –6.7°C (20°F) and 10°C (50°F) at engine start, 5 min. or more after starting engine, engine coolant temp. sensor value is 20°C (48°F) or less (2 trip detection logic)	
	If THW < 10°C (50°F) and THA < 10°C (50°F) at engine start, 2 min. or more after starting engine, engine coolant temp. sensor value is 20°C (48°F) or less (2 trip detection logic)	

INSPECTION PROCEDURE

HINT:

- ▲ If DTCs P0115, P0116, P0117 and P0125 are output simultaneously, engine coolant temperature sensor circuit may be open. Perform the troubleshooting of DTC P0115 first.
- ▲ Read freeze frame data using the hand–held tester or OBD II scan tool, as freeze frame data records the engine conditions when a malfunction is detected. When troubleshooting, it is useful for determining whether the vehicle was running or stopped, the engine was warmed up or not, the air–fuel ratio was lean or rich, etc. at the time of the malfunction.

1	Are there any other codes (besides DTC P0116 and P0125) being output?

YES → Go to relevant DTC chart (See page DI–14).

NO

2	Check thermostat (See page CO–12).

NG → Replace thermostat.

OK →

Replace engine coolant temperature sensor.

DTC	P0120	Throttle Pedal Position Sensor/Switch ”A” Circuit

DTC	P0122	Throttle Pedal Position Sensor/Switch ”A” Circuit Low Input

DTC	P0123	Throttle Pedal Position Sensor/Switch ”A” Circuit High Input

DTC	P0220	Throttle/Pedal Position Sensor/Switch ”B” Circuit

DTC	P0222	Throttle Pedal Position Sensor/Switch ”B” Circuit Low Input

DTC	P0223	Throttle Pedal Position Sensor/Switch ”B” Circuit High Input

DTC	P2135	Throttle/Pedal Position Sensor/Switch ”A”/”B” Voltage Correction

CIRCUIT DESCRIPTION

Throttle position sensor is mounted on the throttle body and it have the 2 sensors to detect the throttle opening angle and the malfunction of the throttle position sensor's own.
The voltage applied to the terminals VTA and VTA2 of the ECM changes between 0 V and 5 V in proportion to the opening angle of the throttle valve. The VTA1 is a signal to indicate the actual throttle valve opening angle which is used for the engine control, and the VTA2 is a signal to indicate the information about the opening angle which is used for detecting a malfunction.
The ECM judges the current opening angle of the throttle valve from these signals input from terminals VTA and VTA2, and the ECM controls the throttle motor to make the throttle valve angle properly in response to driving condition.
If this DTC is stored, the ECM shuts down the power for the throttle motor and the electromagnetic clutch, and the throttle valve is fully closed by the return spring.
However, the opening angle of the throttle valve can be controlled by the accelerator pedal through the throttle cable.

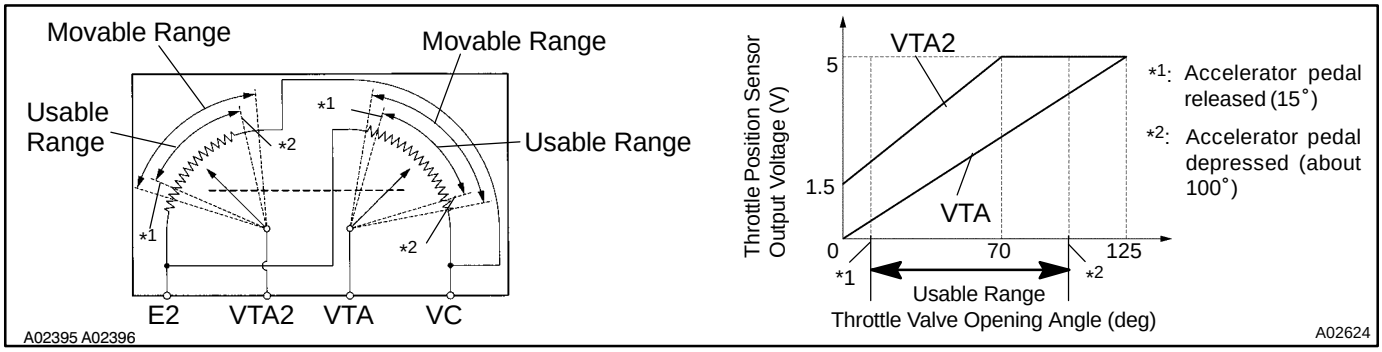

DTC No.	DTC Detection Condition	Trouble Area
Condition (a) of DTC P0120, P0122, P0123, P0222, P0223 or P0220 continues for 10 sec. when idle is ON, but for 2 sec. when idle is OFF		▲Open or short in throttle position sensor circuit ▲Throttle body (throttle position sensor) ▲Wire harness ▲ECM
P0122	(a) VTA1 < 0.2 V	
P0123	(a) VTA1 > 4.8 V	
P0120	Detection conditions for DTCs P0122 and P0123 are not satisfied but condition (a) is satisfied (a) VTA1 < 0.2 V or VTA1 > 4.8 V	
P0222	(a) VTA2 < 0.5 V	
P0223	(a) VTA2 > 4.8 V and 0.2 V < VTA1 < 1.8 V	
P0220	Detection conditions for DTCs P0222 and P0223 are not satisfied but condition (a) is satisfied (a) VTA2 < 0.5 V or VTA2 > 4.8 V and 0.2 V < VTA1 < 1.8 V	
P2135	Condition (a) continues for 0.5 sec. or more, or condition (b) continues for 0.4 sec. or more: (a) |VTA1 – VTA2| < 0.02 V (b) VTA1 < 0.2 V and VTA2 < 0.5 V	

HINT:

DTC No.	Main Trouble Area
P0122	▲Throttle position sensor ▲VTA1 circuit open ▲VC circuit open (when the VC circuit is open, DTCs P0222 and P2135 are also output simultaneously)
P0123	▲Throttle position sensor ▲E2 circuit open
P0222	▲Throttle position sensor ▲VTA2 circuit open ▲VC circuit open (when the VC circuit is open, DTCs P0122 and P2135 are also output simultaneously))
P0223	▲Throttle position sensor
P2135	▲VTA1 and VTA2 circuit are short–circuited ▲VC circuit open ▲Throttle position sensor

HINT:

After confirming DTC P0120, P0122, P0123, P0220, P0222, P0223 and P2135 use the OBD II scan tool or hand–held tester to confirm the throttle valve opening percentage and closed throttle position switch condition.

Throttle valve opening position expressed as percentage and voltage				Trouble area
Accelerator pedal released		Accelerator pedal depressed		
THROTTLE POS	THROTTLE POS #2	THROTTLE POS	THROTTLE POS #2	
0 %	0 V	0 %	0 V	VC circuit open
0 %	2.0 – 2.9 V	0 %	4.7 – 5.1 V	VTA circuit open or ground short
8 – 20 %	0 V	64 – 96 %	0 V	VTA2 circuit open or ground short
100 %	5 V	100 %	5 V	E2 circuit open

WIRING DIAGRAM

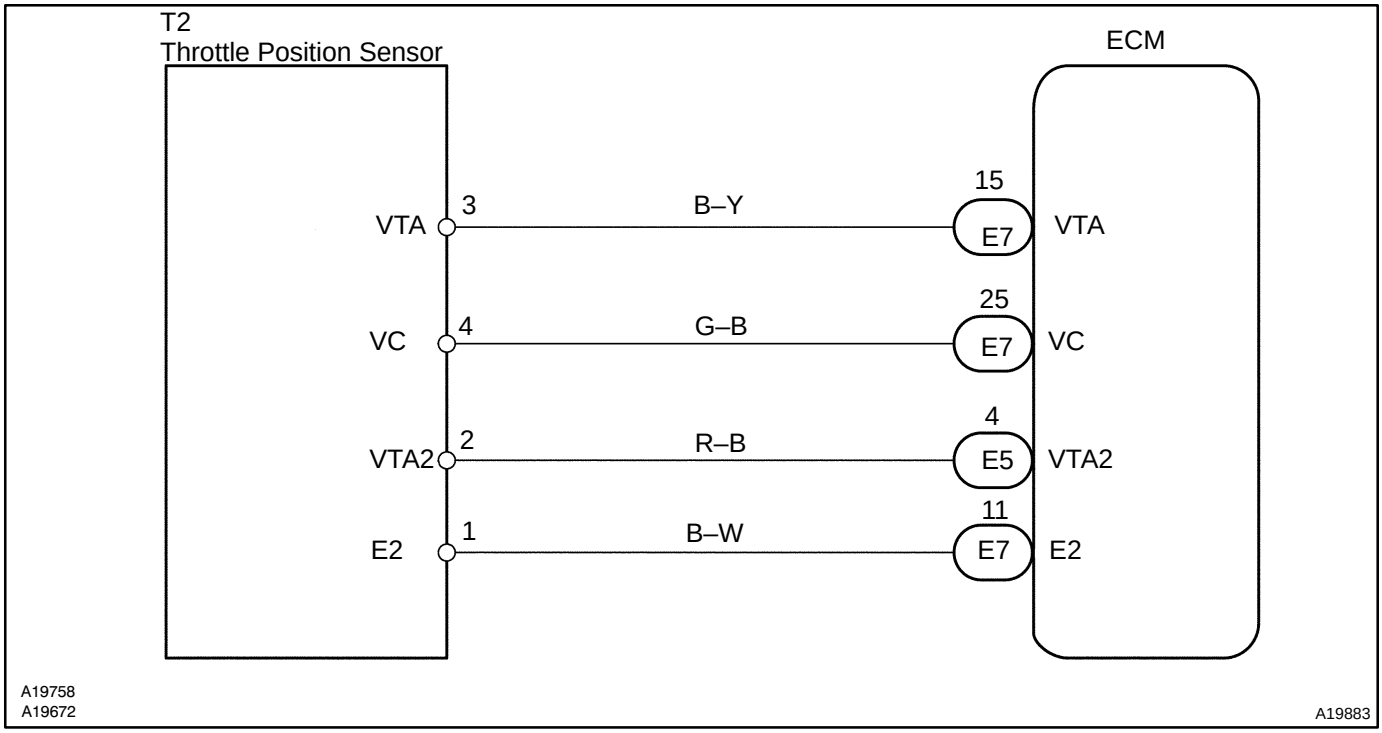

INSPECTION PROCEDURE

HINT:

- If different DTCs that are related to different systems are output simultaneously while terminal E2 is used as a ground terminal, terminal E2 may be open.
- Read freeze frame data using hand–held tester or OBD II scan tool. Because freeze frame records the engine conditions when the malfunction is detected. When troubleshooting it is useful for determining whether the vehicle was running or stopped, the engine was warmed up or not, the air–fuel ratio was lean or rich, etc. at the time of the malfunction.

Hand–held tester:

1	**Connect hand–held tester, and read throttle valve opening percentage.**

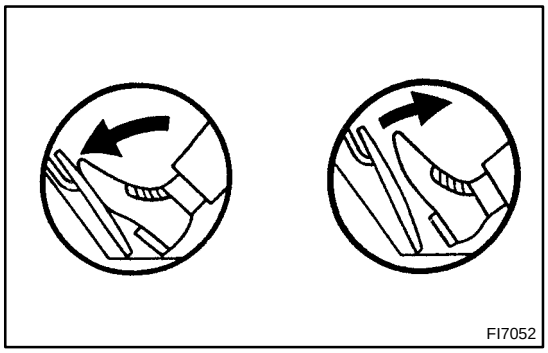

PREPARATION:

(a) Connect the hand–held tester to DLC3.

(b) Turn the ignition switch ON and push the hand–held tester main switch ON.

CHECK:

Read the throttle valve opening percentage for the VTA circuit and read the voltage for the VTA2 circuit.

OK:

Accelerator pedal	Throttle valve opening position expressed as percentage (VTA)	Voltage (VTA2)
Released	8 – 20 %	2.0 – 2.9 V
Depressed	64 – 96 %	4.7 – 5.1 V

OK → **Check and replace ECM (See page IN–27).**

NG

2	**Check voltage between terminals VC and E2 of ECM connector.**

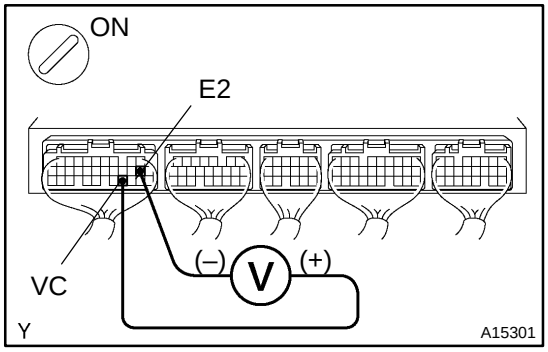

PREPARATION:

(a) Remove the glove compartment door.

(b) Turn the ignition switch ON.

CHECK:

Measure the voltage between terminals VC and E2 of the ECM connector.

OK:

Voltage: 4.5 – 5.5 V

NG → **Check and replace ECM (See page IN–27).**

OK

3	**Check voltage between terminals VTA and E2, and VTA2 and E2 of ECM connector.**

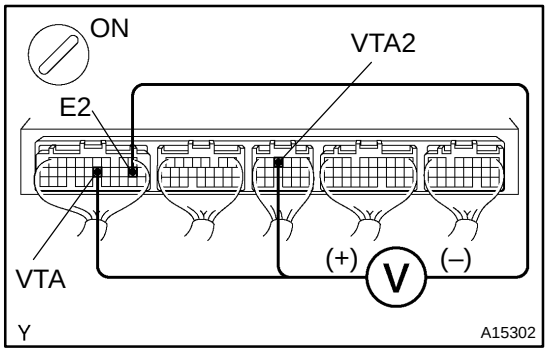

PREPARATION:

(a) Remove the glove compartment door.

(b) Turn the ignition switch ON.

CHECK:

Measure the voltage between terminals VTA and E2, and VTA2 and E2 of the ECM connector.

OK:

Accelerator pedal	Voltage	
	VTA – E2	VTA2 – E2
Released	0.4 – 1.0 V	2.0 – 2.9 V
Depressed	3.2 – 4.8 V	4.7 – 5.1 V

OK → **Check and replace ECM (See page IN–27).**

NG

4	**Check throttle position sensor (See page SF–27).**

NG → **Replace throttle position sensor (See page SF–29).**

OK

Check for open and short in harness and connector in VC, VTA, VTA2 and E2 circuits between ECM and throttle position sensor (See page IN–27).

OBD II scan tool (excluding hand–held tester):

1	**Check voltage between terminals VC and E2 of ECM connector.**

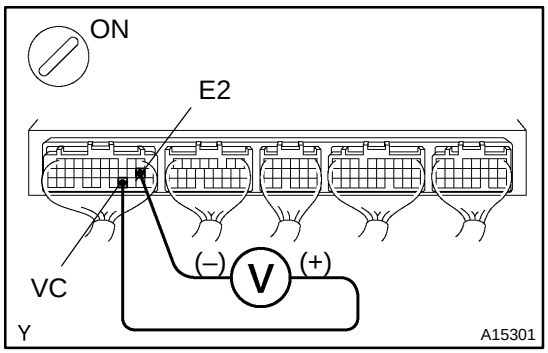

PREPARATION:
(a) Remove the glove compartment door.
(b) Turn the ignition switch ON.

CHECK:
Measure the voltage between terminals VC and E2 of the ECM connector.

OK:
Voltage: 4.5 – 5.5 V

NG → **Check and replace ECM (See page IN–27).**

OK

2	**Check voltage between terminals VTA and E2, and VTA2 and E2 of ECM connector.**

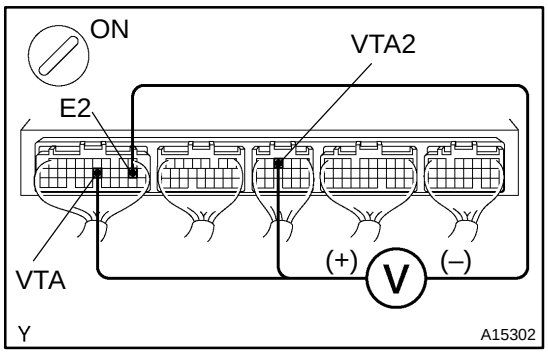

PREPARATION:
(a) Remove the glove compartment door.
(b) Turn the ignition switch ON.

CHECK:
Measure the voltage between terminals VTA and E2, and VTA2 and E2 of the ECM connector.

OK:

Accelerator pedal	Voltage	
	VTA – E2	VTA2 – E2
Released	0.4 – 1.0 V	2.0 – 2.9 V
Depressed	3.2 – 4.8 V	4.7 – 5.1 V

OK → **Check and replace ECM (See page IN–27).**

NG

3	Check throttle position sensor (See page SF–27).

NG → Replace throttle position sensor (See page SF–29).

OK →

Check for open and short in harness and connector in VC, VTA, VTA2 and E2 circuits between ECM and throttle position sensor (See page IN–27).

DTC	P0121	Throttle Pedal Position Sensor/Switch ”A” Circuit Range/Performance Problem

CIRCUIT DESCRIPTION

Refer to DTC P0120 on page DI–44.

DTC No.	DTC Detection Condition	Trouble Area
P0121	While vehicle speed drops from 30 km/h (19 mph) or more to 0 km/h (0 mph), output value of throttle position sensor is out of applicable range (2 trip detection logic)	▲Throttle position sensor

INSPECTION PROCEDURE

HINT:

Read freeze frame data using the hand–held tester or OBD II scan tool, as freeze frame data records the conditions when a malfunction is detected. When troubleshooting, it is useful for determining whether the vehicle was running or stopped, the engine was warmed up or not, the air–fuel ratio was lean or rich, etc. at the time of the malfunction.

1	**Are there any other codes (besides DTC P0121) being output?**

YES → **Go to relevant DTC chart (See page DI–14).**

NO

Replace throttle position sensor.

DI6I2–09

DTC	P0128	Coolant Thermostat (Coolant Temperature Below Thermostat Regulating Temperature)

CIRCUIT DESCRIPTION

If the water temperature doesn't reach 75˚C (167˚F) even after warming up the engine, it is abnormal.

DTC No.	DTC Detection Condition	Trouble Area
P0128	Conditions (a), (b) and (c): (a) Cold start (b) After engine is warmed up (c) Engine coolant temp. < 75˚C (167˚F)	▲Thermostat ▲Cooling system ▲Engine coolant temp. sensor ▲ECM

INSPECTION PROCEDURE

HINT:

Read freeze frame data using the hand–held tester or OBD II scan tool, as freeze frame data records the engine conditions when a malfunction is detected. When troubleshooting, it is useful for determining whether the vehicle was running or stopped, the engine was warmed up or not, the air–fuel ratio was lean or rich, etc. at the time of the malfunction.

1	**Check thermostat (See page CO–12).**

NG → **Replace thermostat.**

YES

2	**Are there any other codes (besides DTC P0128) being output?**

YES → **Go to relevant DTC chart (See page DI–14).**

NG

Check and replace ECM (See page IN–27).

DTC	P0134	Oxygen (A/F) Sensor Circuit No Activity Detected (Bank 1 Sensor 1)

CIRCUIT DESCRIPTION

Refer to DTC P2195 on page DI–167.

DTC No.	DTC Detection Condition	Trouble Area
P0134	After engine is warmed up, A/F sensor output* does not change when conditions (a), (b) and (c) continue for at least 1.5 min.: *: Output value changes at inside of ECM only (a) Engine speed: 1,500 rpm or more (b) Vehicle speed: 40 – 100 km/h (25 – 62 mph) (c) Throttle valve is not fully closed (d) After starting engine < 140 sec.	▲Open or short in A/F sensor (bank 1 sensor 1) circuit ▲A/F sensor (bank 1 sensor 1) ▲Air induction system ▲Fuel pressure ▲Injector ▲Gas leak in exhaust system ▲PCV valve and hose ▲ECM

HINT:

- ▲ Sensor 1 refers to the sensor closest to the engine body.
- ▲ Sensor 2 refers to the sensor farthest from the engine body.
- ▲ After confirming DTC P0134, use the OBD II scan tool or the hand−held tester to confirm output voltage of the A/F sensor (bank 1 sensor 1) from the CURRENT DATA.
- ▲ The ECM controls the voltage of AF1+ and AF1– terminals of the ECM to the fixed voltage. Therefore it is impossible to confirm the A/F sensor output voltage without OBD II scan tool or hand–held tester.
- ▲ OBD II scan tool (excluding hand–held tester) displays the one fifth of the A/F sensor output voltage which is displayed on the hand–held tester.

WIRING DIAGRAM

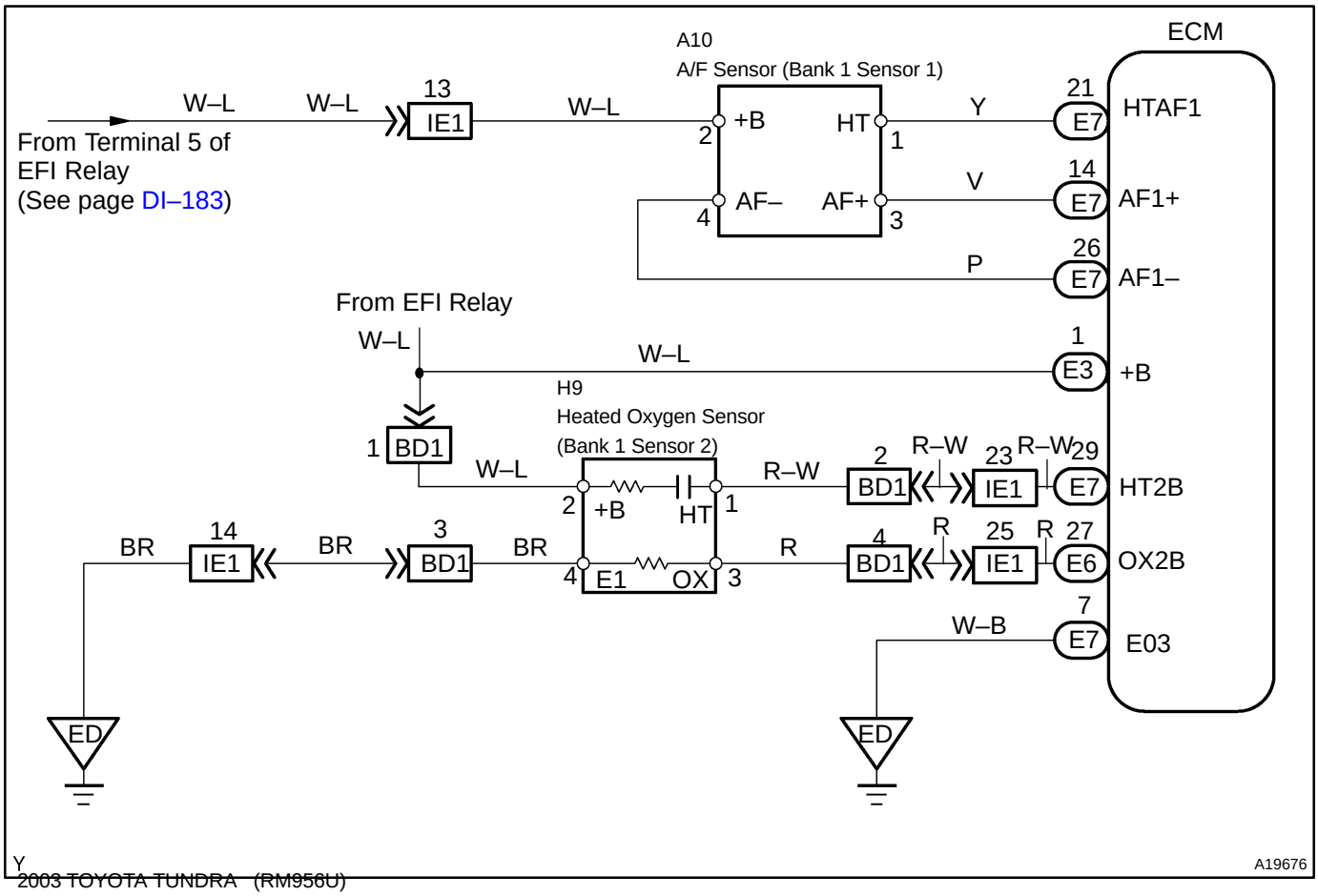

Y
2003 TOYOTA TUNDRA (RM956U)
A19676

INSPECTION PROCEDURE

HINT:

- If the vehicle runs out of fuel, the air–fuel ratio is LEAN and DTC P0134 is recorded. The MIL then comes on.
- Read freeze frame data using the hand–held tester or OBD II scan tool, as freeze frame data records the engine conditions when a malfunction is detected. When troubleshooting, it is useful for determining whether the vehicle was running or stopped, the engine was warmed up or not, the air–fuel ratio was lean or rich, etc. at the time of the malfunction.

1	**Are there any other codes (besides DTC P0134) being output?**

YES → **Go to relevant DTC chart.**

NO

2	**Check connection of PCV valve and hose.**

NG → **Repair or replace PCV valve and hose**

OK

3	**Connect OBD II scan tool or Hand–held tester, and read value for voltage output of A/F sensor (bank 1 sensor 1).**

PREPARATION:

(a) Connect the OBD II scan tool or hand–held tester to the DLC3.

(b) Warm up the A/F sensor (bank 1 sensor 1) with the engine at 2,500 rpm for approximately 90 seconds

CHECK:

(a) Hand–held tester only:
Select the ”ENHANCED OBD2/SNAPSHOT/MANUAL SNAP SHOT/ ALL/” mode on the hand–held tester.

(b) Read the voltage of A/F sensor (bank 1 sensor 1) on the screen of the OBD II scan tool or hand–held tester when performing all the following conditions.

HINT:

The voltage of AF1A+ (+) – E1 (–) terminals of ECM is fixed at 3.3 V and the voltage of terminals AF1A– (–) – E1 is fixed at 3.0 V.

OK:

Normal condition:

Condition (Vehicle Stopped)	A/F Sensor Voltage Value (Normal Condition)
Engine idling	Under either condition shown on the left, voltage value changes a little in the vicinity of 3.3 V (0.660V)* (between approx. 3.1 V – 3.5 V) (See dwg. 1) *: When you using OBD II scan tool (excluding hand–held tester)
Engine is racing at approx. 2,500 rpm (when engine revolution is not suddenly changed)	
Engine is racing (when fuel cut)*2 (The number of revolution is increased to approx. 4,000 rpm temporarily, and then decreased to idle speed with accelerator pedal completely released) *2 : If battery terminal is disconnected, vehicle may need to be driven at 10 km/h (6 mph) or more to cause fuel cut.	Under the condition shown on the left, voltage value changes into 3.8 V (0.76 V)* or more temporarily (See dwg. 1) *: When you using OBD II scan tool (excluding hand–held tester)

(dwg. 1) Vehicle Stopped:

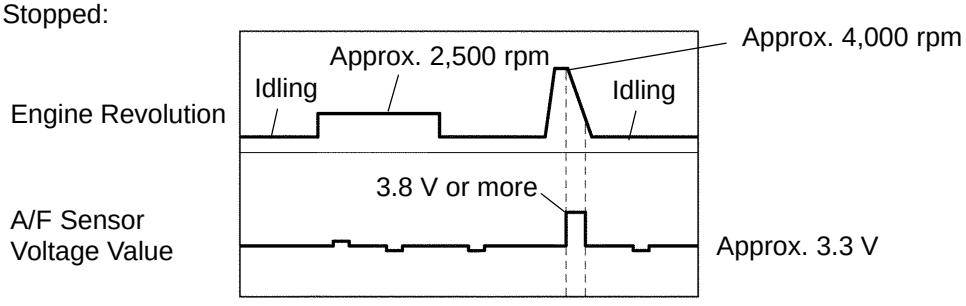

HINT:

When the vehicle is driven:

In the case that the output voltage of the A/F sensor is below 2.8 V (0.76 V)* during fuel enrichment (for example, when the vehicle tries to overtake another vehicle on a highway, the vehicle speed is suddenly increased with the accelerator pedal fully depressed), the A/F sensor are functioning normally.

*: When using the OBD II scan tool (excluding hand–held tester).

Malfunction condition:

Condition	A/F Sensor Voltage Value (Malfunction Condition)
Engine idling	Under any conditions shown on the left, the voltage value does not change at all. (See dwg. 2)
Engine is racing at approx. 2,500 rpm (when engine revolution is not suddenly changed)	
Engine is racing (when fuel cut)*2 (The number of revolution is increased to approx. 4,000 rpm temporarily, and then decreased to idle speed with accelerator pedal completely released) *2 : If battery terminal is disconnected, vehicle may need to be driven at 10 km/h (6 mph) or more to cause fuel cut.	

(dwg. 2)

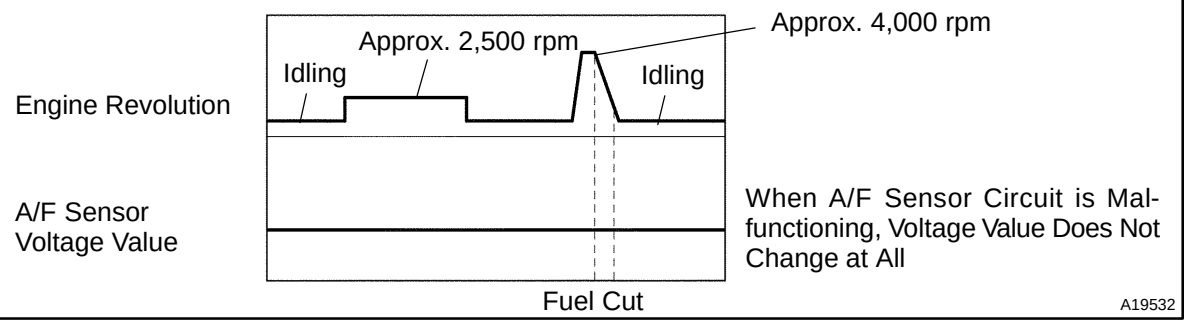

HINT:

- ▲ Whenever the output voltage of the A/F sensor remains at approx. 3.3 V (0.660 V)* (see dwg. 2) under any conditions as well as the above conditions, the A/F sensor may have an open–circuit. (This will happen also when the A/F sensor heater has an open–circuit.)
- ▲ Whenever the output voltage of the A/F sensor remains at a certain value of approx. 3.8 V (0.76 V)* or more, or 2.8 V (0.56 V)* or less (see dwg. 2) under any conditions as well as the above conditions, the A/F sensor may have a short–circuit.

*: When using the OBD II scan tool (excluding hand–held tester).

OK → **Go to step 10.**

NG

4	**Check for open and short in harness and connector between ECM and A/F sensor (bank 1 sensor 1) (See page IN–27).**

NG → **Repair or replace harness or connector.**

OK

5	Check resistance of A/F sensor heater (bank 1 sensor 1) (See page SF–46).

NG → Replace A/F sensor.

OK

6	Check air induction system (See page SF–1).

NG → Repair or replace.

OK

7	Check fuel pressure (See page SF–7).

NG → Check and repair fuel pump, pressure regulator, fuel pipe line and filter (See page SF–1).

OK

8	Check injector injection (See page SF–20).

NG → Replace injector.

OK

9	Check gas leak on exhaust system.

NG → Repair or replace.

OK

10	Replace A/F sensor.

GO

11	Perform confirmation driving pattern (See page DI–167).

GO

12	Is there DTC P0134 being output again?

YES → Check and replace ECM (See page IN–27).

NO

13	Did vehicle run out of fuel in past?

NO → Check for intermittent problems (See page DI–3).

YES

DTC P0134 is caused by shortage of fuel.

14	Perform confirmation driving pattern (See page DI–167).

GO

15	Is there DTC P0134 being output again?

NO → Go to step 19.

YES

16	Replace A/F sensor.

GO

17	Perform confirmation driving pattern (See page DI–167).

GO

18	Is there DTC P0134 being output again ?

YES → Check and replace ECM (See page IN–27).

NO

19	Did vehicle run out of fuel in past?

NO → Check for intermittent problems (See page DI–3).

YES

DTC P0134 is caused by shortage of fuel.

DIA99–01

DTC	P0136	Oxygen Sensor Circuit Malfunction (Bank 1 Sensor 2)

CIRCUIT DESCRIPTION

To obtain a high purification rate for the CO, HC and NOx components of the exhaust gas, a three–way catalytic converter is used, but for the most efficient use of the three–way catalytic converter, the air–fuel ratio must be precisely controlled so that it is always close to the stoichiometric air–fuel ratio.

The oxygen sensor has the characteristic whereby its output voltage changes suddenly in the vicinity of the stoichiometric air–fuel ratio. This is used to detect the oxygen concentration in the exhaust gas and provide feedback to the computer for control of the air–fuel ratio.

When the air–fuel ratio becomes LEAN, the oxygen concentration in the exhaust increases and the oxygen sensor informs the ECM of the LEAN condition (small electromotive force: < 0.45 V).

When the air–fuel ratio is RICHER than the stoichiometric air–fuel ratio the oxygen concentration in the exhaust gas in reduced and the oxygen sensor informs the ECM of the RICH condition (large electromotive force: > 0.45V).

The ECM judges by the electromotive force from the oxygen sensor whether the air–fuel ratio is RICH or LEAN and controls the injection time accordingly. However, if malfunction of the oxygen sensor causes output of abnormal electromotive force, the ECM is unable to perform accurate air–fuel ratio control.

The oxygen sensors include a heater which heats the zirconia element. The heater is controlled by the ECM. When the intake air volume is low (the temp. of the exhaust gas is low) current flows to the heater to heat the sensor for accurate oxygen concentration detection.

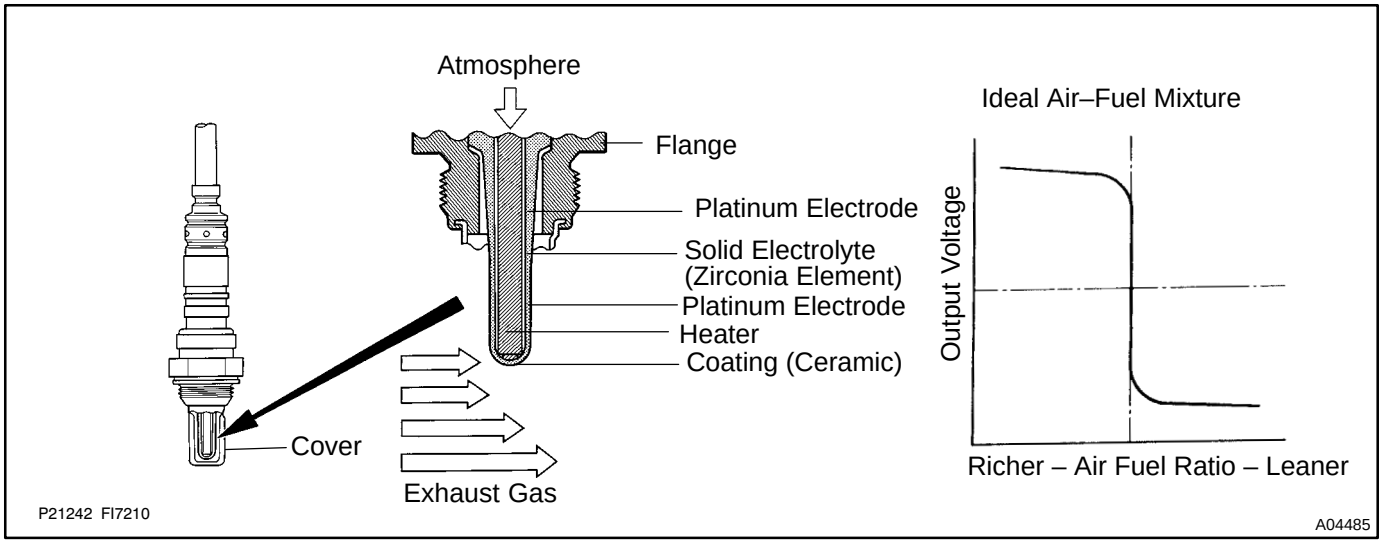

DTC No.	DTC Detection Condition	Trouble Area
P0136	Output Voltage of heated oxygen sensor remains at 0.4 V or more or 0.5 V or less when vehicle is driven at 50 km/h (31 mph) or more after engine is warmed up (2 trip detection logic)	▲Open or short in heated oxygen sensor circuit ▲Heated oxygen sensor

HINT:

- ▲ Sensor 1 refers to the sensor closest to the engine body.
- ▲ Sensor 2 refers to the sensor farthest from the engine body.

WIRING DIAGRAM

Refer to DTC P0134 on page DI–53.

INSPECTION PROCEDURE

HINT:

Read freeze frame data using the hand–held tester or OBD II scan tool, as freeze frame data records the engine conditions when a malfunction is detected. When troubleshooting, it is useful for determining whether the vehicle was running or stopped, the engine was warmed up or not, the air–fuel ratio was lean or rich, etc. at the time of the malfunction.

1	**Are there any other codes (besides DTC P0136) being output?**

YES → **Go to relevant DTC chart (See page IN–27).**

NO

2	**Check for open and short in harness and connector between ECM and heated oxygen sensor (See page IN–27).**

NG → **Repair or replace harness or connector.**

OK

3	**Check output voltage of heated oxygen sensor.**

PREPARATION:

(a) Connect the OBD II scan tool or hand–held tester to the DLC3.

(b) Warm up the engine to the normal operating temperature.

CHECK:

Read the output voltage of the heated oxygen sensor when the engine is suddenly raced.

HINT:

Perform quick racing to 4,000 rpm for 3 minutes using the accelerator pedal.

OK:

Heated oxygen sensor output voltage: Alternates between from 0.4 V or less to 0.5 V or more.

OK → **Check that each connector is properly connected.**

NG

Replace heated oxygen sensor.

DIA9B–01

DTC	P0171	System too Lean (Bank 1)

DTC	P0172	System too Rich (Bank 1)

CIRCUIT DESCRIPTION

The fuel trim is related to the feedback compensation value, not to the basic injection time. The fuel trim includes the short–term fuel trim and the long–term fuel trim. The short–term fuel trim is the short–term fuel compensation used to maintain the air–fuel ratio at its ideal theoretical value. The signal from the A/F sensor is approximately proportional to the existing air–fuel ratio. Comparing it with the ideal theoretical value, the ECM reduces fuel volume immediately if the air–fuel ratio is RICH and increases fuel volume if it is LEAN. The long–term fuel trim compensates for the deviation from the central value of the short–term fuel trim which is stored up by each engine tolerance, and the deviation from the central value due to the passage of time and changes of environment. If both the short–term fuel trim and long–term fuel trim exceed a certain value, it is detected as a malfunction and the MIL lights up.

DTC No.	DTC Detection Condition	Trouble Area
P0171 P0172	When air fuel ratio feedback is stable after warming up engine, fuel trim is considerably in error on RICH side (2 trip detection logic)	▲Air induction system ▲Injector blockage ▲Mass air flow meter ▲Engine coolant temp. sensor ▲Fuel pressure ▲Gas leak on exhaust system ▲Open or short in A/F sensor (bank 1 sensor 1) circuit ▲A/F sensor (bank 1 sensor 1) ▲PCV valve and hose ▲ECM

HINT:

- ▲ When DTC P0171 and P0172 is recorded, the actual air–fuel ratio is on the LEAN side. When DTC P0172 is recorded, the actual air–fuel ratio is on the RICH side.
- ▲ If the vehicle runs out of fuel, the air–fuel ratio is LEAN and DTC P0171 is recorded. The MIL then comes on.
- ▲ If the total of the short–term fuel trim value and long–term fuel trim value is within ± 35 % (80˚C (176˚F) or more), the system is functioning normally.
- ▲ The A/F sensor (bank 1 sensor 1) output voltage and the short–term fuel trim value can be read using the OBD II scan tool or hand–held tester.
- ▲ The ECM controls the voltage of the AF1+ and AF1– terminals of the ECM to the fixed voltage. Therefore it is impossible to confirm the A/F sensor output voltage without OBD II scan tool or hand–held tester.
- ▲ OBD II scan tool (excluding hand–held tester) displays the one fifth of the A/F sensor (bank 1 sensor 1) output voltage which is displayed on the hand–held tester.

WIRING DIAGRAM

Refer to DTC P0134 on page DI–53.

INSPECTION PROCEDURE

HINT:

Read freeze frame data using the hand–held tester or OBD II scan tool, as freeze frame data records the engine conditions when a malfunction is detected. When troubleshooting, it is useful for determining whether the vehicle was running or stopped, the engine was warmed up or not, the air–fuel ratio was lean or rich, etc. at the time of the malfunction.

1	**Check air induction system (See page SF–1).**

NG → **Repair or replace.**

OK

2	**Check connection of PCV valve and hose**

NG → **Repair or replace PCV valve and hose**

OK

3	**Check injector injection (See page SF–20).**

NG → **Replace injector.**

OK

4	**Check mass air flow meter (See page SF–26) and engine coolant temperature sensor (See page SF–39).**

NG → **Repair or replace.**

OK

5	Check for spark and ignition (See page IG–1).

NG → Repair or replace.

OK

6	Check fuel pressure (See page SF–7).

NG → Check and repair fuel pump, pressure regulator, fuel pipe line and filter (See page SF–1).

OK

7	Check gas leak on exhaust system.

NG → Repair or replace.

OK

8	**Connect the OBDII scan tool or hand–held tester and read value for voltage output of A/F sensor.**

PREPARATION:

(a) Connect the OBD II scan tool or hand–held tester to the DLC3.

(b) Warm up the A/F sensor (bank 1 sensor 1) with the engine at 2,500 rpm for approximately 90 seconds

CHECK:

(a) Hand–held tester only:
Select the ”ENHANCED OBD2/SNAPSHOT/MANUAL SNAP SHOT/ ALL/” mode on the hand–held tester.

(b) Read the voltage of A/F sensor (bank 1 sensor 1) on the screen of the OBD II scan tool or hand–held tester when performing all the following conditions.

HINT:

The voltage of AF1A+ (+) – E1 (–) terminals of ECM is fixed at 3.3 V and the voltage of terminals AF1A– (–) – E1 is fixed at 3.0 V.

OK:

Normal condition:

Condition (Vehicle Stopped)	A/F Sensor Voltage value (Normal condition)
Engine idling	Under either condition shown on the left, voltage value changes a little in the vicinity of 3.3 V (0.660V)* (between approx. 3.1 V – 3.5 V) (See dwg. 1) *: When you using OBD II scan tool (excluding hand–held tester)
Engine is racing at approx. 2,500 rpm (when engine revolution is not suddenly changed)	
Engine is racing (when fuel cut)*2 (The number of revolution is increased to approx. 4,000 rpm temporarily, and then decreased to idle speed with accelerator pedal completely released) *2 : If battery terminal is disconnected, vehicle may need to be driven at 10 km/h (6 mph) or more to cause fuel cut.	Under the condition shown on the left, voltage value changes into 3.8 V (0.76 V)* or more temporarily (See dwg. 1) *: When you using OBD II scan tool (excluding hand–held tester)

(dwg. 1) Vehicle Stopped:

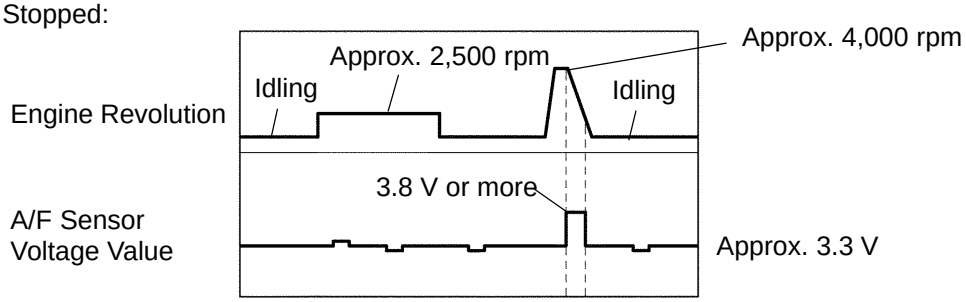

P A19531

HINT:

When the vehicle is driven:

In the case that the output voltage of the A/F sensor is below 2.8 V (0.76 V)* during fuel enrichment (for example, when the vehicle tries to overtake another vehicle on a highway, the vehicle speed is suddenly increased with the accelerator pedal fully depressed), the A/F sensor are functioning normally.

*: When using the OBD II scan tool (excluding hand–held tester).

Malfunction condition:

Condition	A/F Sensor Voltage value (Malfunction condition)
Engine idling	Under any conditions shown on the left, the voltage value does not change at all. (See dwg. 2)
Engine is racing at approx. 2,500 rpm (when engine revolution is not suddenly changed)	
Engine is racing (when fuel cut)*2 (The number of revolution is increased to approx. 4,000 rpm temporarily, and then decreased to idle speed with accelerator pedal completely released) *2 : If battery terminal is disconnected, vehicle may need to be driven at 10 km/h (6 mph) or more to cause fuel cut.	

(dwg. 2)

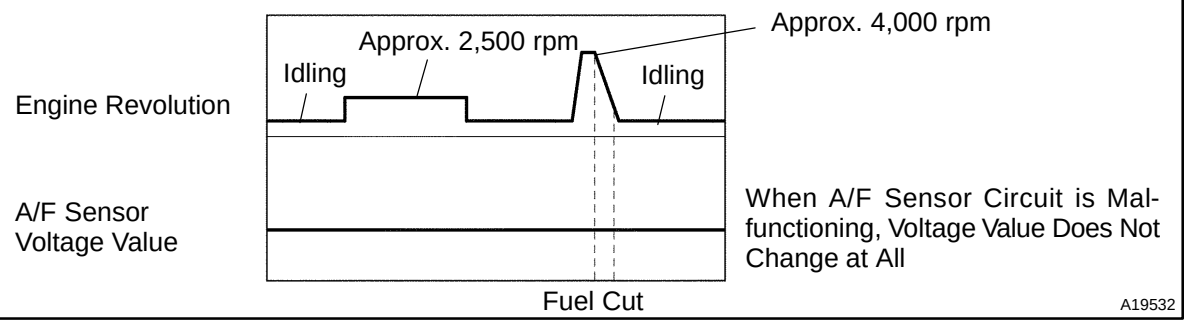

HINT:

- ▲ Whenever the output voltage of the A/F sensor remains at approx. 3.3 V (0.660 V)* (see dwg. 2) under any conditions as well as the above conditions, the A/F sensor may have an open–circuit. (This will happen also when the A/F sensor heater has an open–circuit.)
- ▲ Whenever the output voltage of the A/F sensor remains at a certain value of approx. 3.8 V (0.76 V)* or more, or 2.8 V (0.56 V)* or less (see dwg. 2) under any conditions as well as the above conditions, the A/F sensor may have a short–circuit.

*: When using the OBD II scan tool (excluding hand–held tester).

OK → **Go to step 14.**

NG

9	**Check for open and short in harness and connector between ECM and A/F sensor (bank 1 sensor 1) (See page IN–27).**

NG → **Repair or replace harness or connector.**

10	Replace A/F sensor.

GO

11	Perform confirmation driving pattern (See page DI–167).

Go

12	Is there DTC P0171 or P0172 being output again?

YES → Check and replace ECM (See page IN–27).

NO

13	Did vehicle run out of fuel in past?

NO → Check for intermittent problems (See page DI–3).

YES

DTC P0171 or P0172 is caused by shortage of fuel.

14	Perform confirmation driving pattern (See page DI–167).

Go

15	Is there DTC P0171 or P0172 being output again?

NO → Go to step 18.

NO

16	Replace A/F sensor.

GO

17	Are there DTC P0171 and/or P0172 being output again ?

YES → Check and replace ECM (See page IN–27).

NO

18	Did vehicle run out of fuel in past?

NO → Check for intermittent problems (See page DI–3).

YES

DTC P0171 or P0172 is caused by shortage of fuel.

DTC	P0300	Random/Multiple Cylinder Misfire Detected

DTC	P0301	Cylinder 1 Misfire Detected

DTC	P0302	Cylinder 2 Misfire Detected

DTC	P0303	Cylinder 3 Misfire Detected

DTC	P0304	Cylinder 4 Misfire Detected

DTC	P0305	Cylinder 5 Misfire Detected

DTC	P0306	Cylinder 6 Misfire Detected

CIRCUIT DESCRIPTION

Misfire: The ECM uses the crankshaft position sensor and camshaft position sensor to monitor changes in the crankshaft rotation for each cylinder.

The ECM counts the number of times the engine speed change rate indicates that misfire has occurred. And when the misfire rate equals to or exceeds the count of indicating that the engine condition has deteriorated, the MIL lights up.

If the misfire rate is high enough and the driving conditions will cause the catalyst to overheat, the MIL blinks when misfiring occurs.

DTC No.	DTC Detection Condition	Trouble Area
P0300	Misfiring of random cylinders is detected during any particular 200 or 1,000 revolutions	▲Open or short in engine wire ▲Connector connection ▲Vacuum hose connection ▲Ignition system ▲Injector ▲Fuel pressure ▲Mass air flow meter ▲Engine coolant temp. sensor ▲Compression pressure ▲Valve clearance ▲Valve timing ▲PCV valve and hose
P0301 P0302 P0303 P0304 P0305 P0306	For any particular 200 revolutions for engine, misfiring is detected which can cause catalyst overheating (This causes MIL to blink)	
	For any particular 1,000 revolutions of engine, misfiring is detected which causes a deterioration in emission (2 trip detection logic)	

HINT:
When codes for a misfiring cylinder are recorded repeatedly but no random misfire code is recorded, it indicates that the misfires have been detected and recorded at different times.

WIRING DIAGRAM

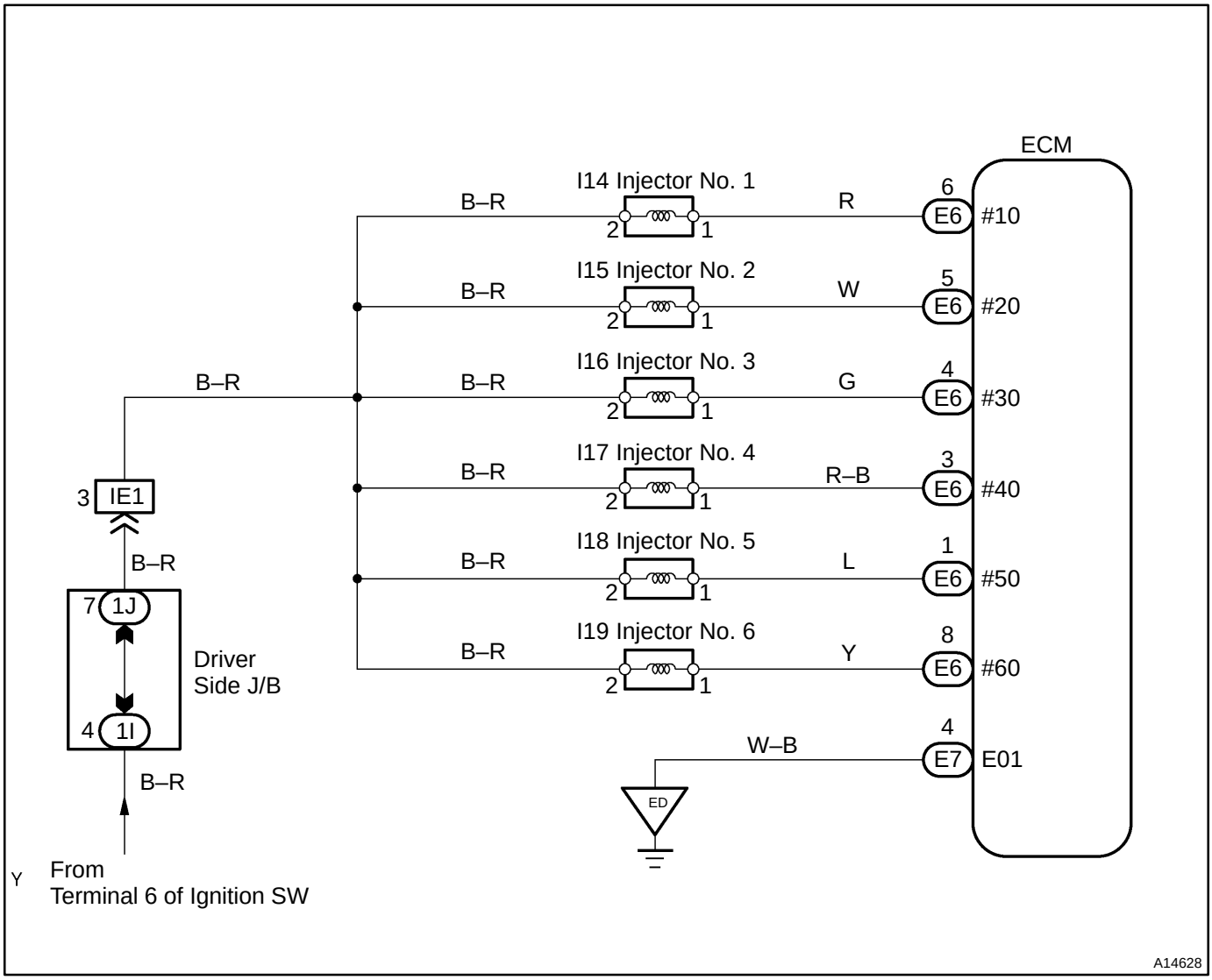

CONFIRMATION DRIVING PATTERN

(a) Connect the hand–held tester or the OBD II scan tool to the DLC3.
(b) Record DTC and the freeze frame data.
(c) Use the hand–held tester to set to the Check Mode (See page DI–3).
(d) Read the value on the misfire counter for each cylinder when idling. If the value is displayed on the misfire counter, skip the following procedure of confirmation driving.
(e) Drive the vehicle several times with the engine speed, load and its surrounding range shown with ENGINE SPD, CALC LOAD in the freeze frame data or MISFIRE RPM, MISFIRE LOAD in the data list.

If you have no hand–held tester, turn the ignition switch OFF after the symptom is simulated the first time. Then repeat the simulation process again.
HINT:
In order to memorize the DTC of misfire, it is necessary to drive around MISFIRE RPM, MISFIRE LOAD for the following period of time in the data list.

Engine Speed	Time
Ignition	3 minutes 30 seconds or more
1,000 rpm	3 minutes or more
2,000 rpm	1 minute 30 seconds or more
3,000 rpm	1 minute or more

(f) Check whether there is misfire or not by monitoring DTC and the freeze frame data. After that, record them.

(g) Turn the ignition switch OFF and wait at least 5 seconds.

INSPECTION PROCEDURE

HINT:

- If DTCs besides misfire are memorized simultaneously, first perform the troubleshooting for them.
- Read freeze frame data using hand–held tester or OBD II scan tool, as freeze frame data records the engine conditions when a malfunction is detected. When troubleshooting, it is useful for determining whether the vehicle was running or stopped, the engine was warmed up or not, the air–fuel ratio was lean or rich, etc. at the time of the malfunction.
- When the vehicle is brought to the workshop and the misfire is not occurred, misfire can be confirmed by reproducing the condition or freeze frame data. Also, after finishing the repair, confirm that there is no misfire (See the confirmation driving pattern).
- On 6 cylinder engines, misfiring cylinder identification is disabled at high engine speed and only an general misfire fault code P0300 is stored instead of a cylinder specific misfire fault code (i. e., P0301 – P0306). Under the following conditions, only P0300 code may be stored. Misfire starts in the high engine speed area or Misfire occurs only in the high engine speed area. Therefore, when a general misfire fault code (i.e., P0300) is only stored, erase the DTCs after read freeze frame data with the hand–held tester or OBD II scan tool. Start the engine and drive the confirmation patten (See the CONFIRMATION DRIVING PATTERN) and read the value of the misfire ratio for each cylinder (or DTC). Perform the repair correspond to the high misfire ratio cylinder (or the misfiring cylinder indicated by DTC). After completing the repair, confirm no misfire is occurring by driving the confirmation pattern.
- When either of SHORT FT #1, LONG FT #1, SHORT FT #2 or LONG FT #2 in the freeze frame data is besides the range of ±20 %, there is a possibility that the air–fuel ratio is inclining either to RICH (–20 % or less) or LEAN (+20 % or more).
- When COOLANT TEMP in the freeze frame data is less than 80˚C (176˚F), there is a possibility or misfire only during warming up.
- If the misfire cannot be reproduced, the reason may be because of the driving with lack or fuel, the use of improper fuel, a stain on ignition plug, etc.
- Be sure to check the value on the misfire counter after the repair.

Hand–held tester:

1	**Check wire harness and vacuum hose in engine room.**

CHECK:

Check the disconnection, piping and break of vacuum hose.

NG → **Repair or replace, then confirm that there is no misfire (See confirmation driving pattern).**

OK

2	**Check connection of PCV piping.**

NG → **Repair or replace PCV piping.**

OK

3	**Connect hand–held tester, and read the number of misfire.**

PREPARATION:

(a) Connect the hand–held tester to the DLC3.
(b) Turn the ignition switch ON and push the hand–held tester main switch ON.
(c) Start the engine.

CHECK:

Read the number of misfire on the hand–held tester.

RESULT:

High Misfire Rate Cylinder	Proceed to
1 or 2 cylinders	Type I
More than 3 cylinders	Type II

Type II → **Go to step 14.**

Type I

4	Check spark plug and spark of misfiring cylinder.

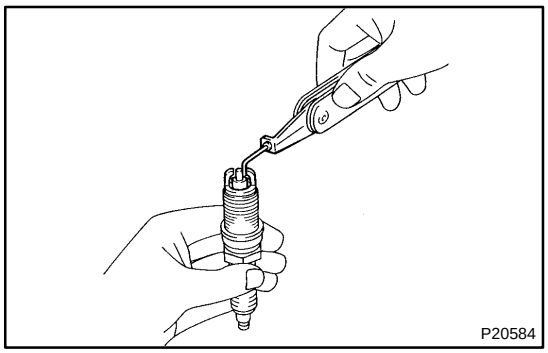

PREPARATION:

(a) Remove the ignition coil (See page IG–7).

(b) Remove the spark plug.

CHECK:

(a) Check spark plug type.

(b) Check the electrode for carbon deposits.

(c) Check the electrode gap.

OK:

(a) Recommended spark plug:

DENSO made	K16TR11
NGK made	BKR5EKB–11

(b)

No large carbon deposit present.

Not wet with gasoline or oil.

(c)

Correct electrode gap for new spark plug:

1.1 mm (0.043 in.)

PREPARATION:

(a) Install the spark plug to the ignition coil, and connect the ignition coil the connector.

(b) Disconnect injector connector.

(c) Hold the end about 12.5 mm (0.5 in.) from the ground.

CHECK:

Check if spark occurs while engine is being cranked.

NOTICE:

To prevent excess fuel from being injected from the injectors during this test, don't crank the engine for more than 5 – 10 sec. at a time.

OK:

Spark jumps across electrode gap.

OK	**Go to step 14.**

NG

5	**Change normal spark plug and check spark of misfiring cylinder.**

PREPARATION:

(a) Disconnect the spark plug.
(b) Change the normal spark plug.
(c) Install the spark plug to the ignition coil.
(d) Disconnect the injector connector.
(e) Ground the spark plug.

CHECK:

Check if spark occurs while the engine is being cranked.

NOTICE:

To prevent excess fuel from being injected from the injectors during this test, don't crank the engine for more than 5 – 10 seconds at a time.

OK:

Spark jumps across electrode gap.

OK → **Replace spark plug.**

NG

6	**Inspect high–tension cords for misfiring cylinder (See page IG–1).**

NG → **Replace high–tension cords.**

OK

7	**Inspect ignition coil for misfiring cylinder (See page IG–1).**

NG → **Replace ignition coil.**

OK

8	**Check voltage of ECM terminal for injector of failed cylinder.**

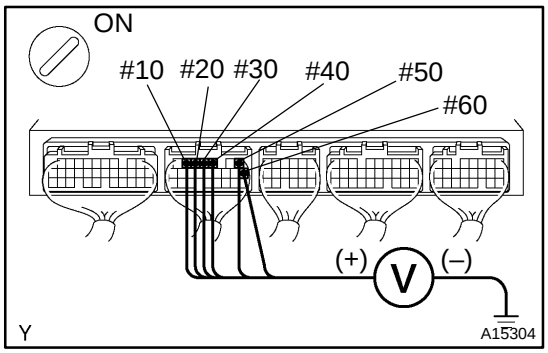

PREPARATION:

(a) Remove the glove compartment (See page SF–49).

(b) Turn the ignition switch ON.

CHECK:

Measure the voltage between applicable terminal of the ECM connector and body ground.

OK:

Voltage: 9 – 14 V

Reference: INSPECTION USING OSCILLOSCOPE

With the engine idling, check the waveform between terminals #10 – #60 and E01 of the ECM connectors.

HINT:

The correct waveform is as shown.

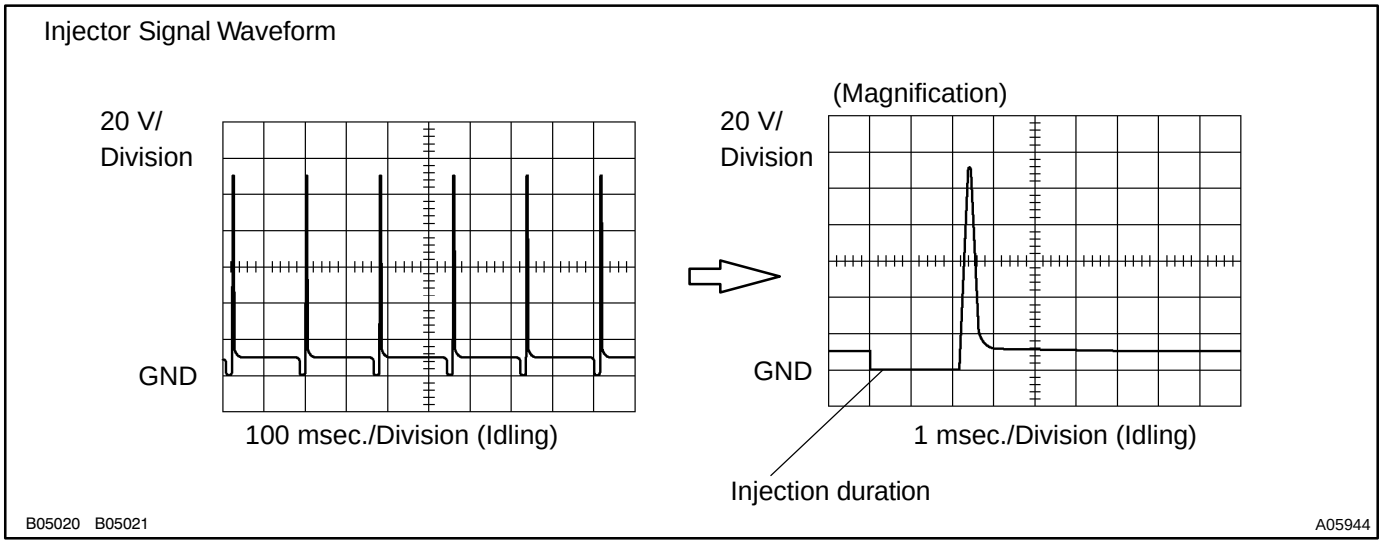

OK	**Go to step 11.**

NG

9	**Check resistance of injector of misfiring cylinder (See page SF–20).**

NG	**Replace injector.**

OK

10	Check for open and short in harness and connector between ignition switch and injector, injector and ECM of misfiring cylinder (See page IN–27)

NG → Repair or replace harness or connector.

OK

11	Check injector injection of misfiring cylinder (See page SF–20).

NG → Replace injector.

OK

12	Check compression pressure of misfiring cylinder (See page EM–3).

NG → Repair or replace.

OK

13	Check valve clearance of misfiring cylinder (See page EM–4).

NG → Adjust valve clearance.

OK

14	Check valve timing (Check for loose and jumping teeth of timing belt) (See page EM–18).

NG → Adjust valve timing (Repair or replace timing belt).

OK

15	Check fuel pressure (See page SF–7).

NG → Check and repair fuel pump, pressure regulator, fuel pipe line and filter (See page SF–1).

OK →

16	Check mass air flow meter (See page SF–26).

NG → Repair mass air flow meter.

OK →

17	Check engine coolant temp. sensor (See page SF–39).

NG → Replace engine coolant temp. sensor.

OK →

Check intermittent problems (See page DI–3).

OBD II scan tool (excluding hand–held tester):

1	**Check wire harness and vacuum hose in engine room.**

CHECK:

Check the disconnection, piping and break of vacuum hose.

NG → **Repair or replace, then confirm that there is no misfire (See confirmation driving pattern).**

OK

2	**Check connection of PCV piping.**

NG → **Repair or replace PCV piping.**

OK

3	Check spark plug and spark of misfiring cylinder.

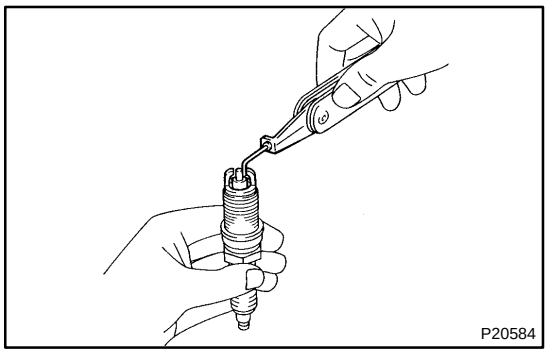

PREPARATION:

(a) Remove the ignition coil (See page IG–7).

(b) Remove the spark plug.

CHECK:

(a) Check spark plug type.

(b) Check the electrode for carbon deposits.

(c) Check the electrode gap.

OK:

(a) Recommended spark plug:

DENSO made	K16TR11
NGK made	BKR5EKB–11

(b)

No large carbon deposit present.

Not wet with gasoline or oil.

(c)

Correct electrode gap for new spark plug:

1.1 mm (0.043 in.)

PREPARATION:

(a) Install the spark plug to the ignition coil, and connect the ignition coil the connector.

(b) Disconnect injector connector.

(c) Hold the end about 12.5 mm (0.5 in.) from the ground.

CHECK:

Check if spark occurs while engine is being cranked.

NOTICE:

To prevent excess fuel from being injected from the injectors during this test, don't crank the engine for more than 5 – 10 sec. at a time.

OK:

Spark jumps across electrode gap.

OK	**Go to step 14.**

NG

4	**Change normal spark plug and check spark of misfiring cylinder.**

PREPARATION:

(a) Disconnect the spark plug.
(b) Change the normal spark plug.
(c) Install the spark plug to the ignition coil.
(d) Disconnect the injector connector.
(e) Ground the spark plug.

CHECK:

Check if spark occurs while the engine is being cranked.

NOTICE:

To prevent excess fuel from being injected from the injectors during this test, don't crank the engine for more than 5 – 10 seconds at a time.

OK:

Spark jumps across electrode gap.

OK → **Replace spark plug.**

NG

5	**Inspect high–tension cords for misfiring cylinder (See page IG–1).**

NG → **Replace high–tension cords.**

OK

6	**Inspect ignition coil for misfiring cylinder (See page IG–1).**

NG → **Replace ignition coil.**

OK

7	Check voltage of ECM terminal for injector of failed cylinder.

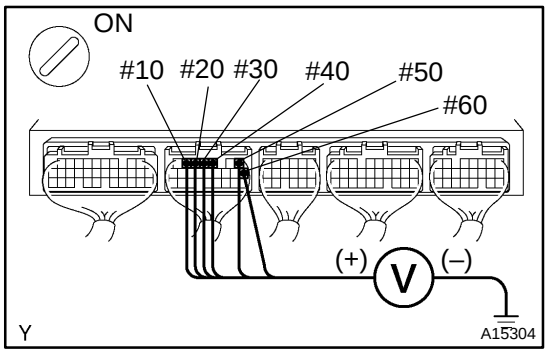

PREPARATION:

(a) Remove the glove compartment (See page SF–49).

(b) Turn the ignition switch ON.

CHECK:

Measure the voltage between applicable terminal of the ECM connector and body ground.

OK:

Voltage: 9 – 14 V

Reference: INSPECTION USING OSCILLOSCOPE

With the engine idling, check the waveform between terminals #10 – #60 and E01 of the ECM connectors.

HINT:

The correct waveform is as shown.

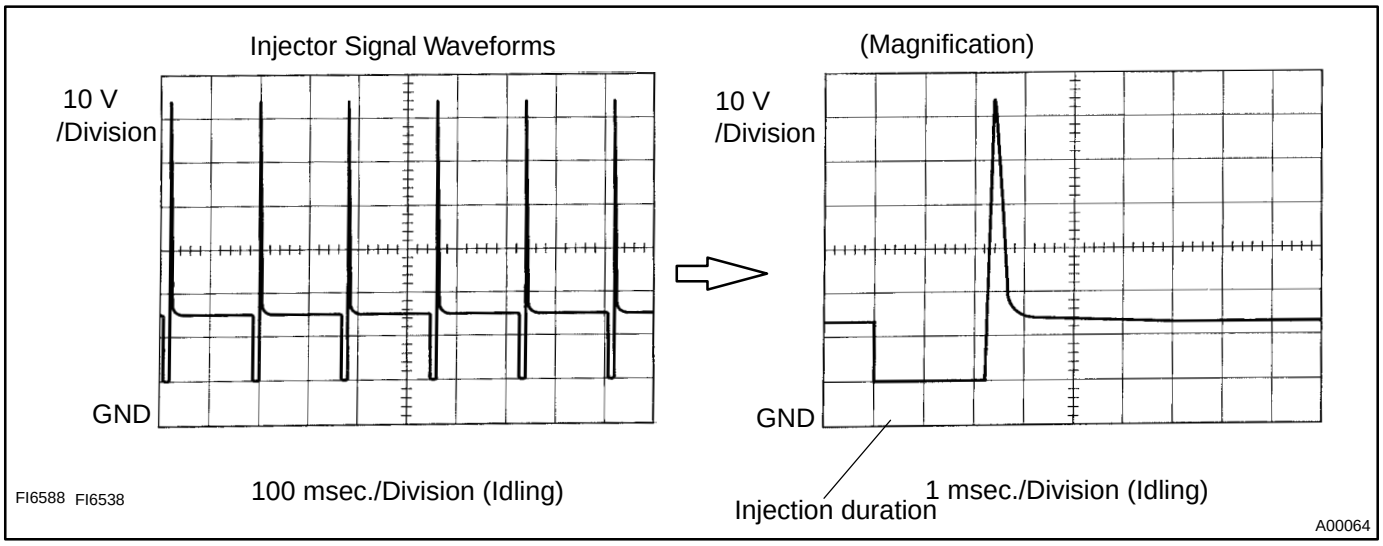

OK	Go to step 11.

NG

8	Check resistance of injector of misfiring cylinder (See page SF–20).

NG	Replace injector.

OK

9	Check for open and short in harness and connector between ignition switch and injector, injector and ECM of misfiring cylinder (See page IN–27)

NG → Repair or replace harness or connector.

OK ↓

10	Check injector injection of misfiring cylinder (See page SF–20).

NG → Replace injector.

OK ↓

11	Check compression pressure of misfiring cylinder (See page EM–3).

NG → Repair or replace.

OK ↓

12	Check valve clearance of misfiring cylinder (See page EM–4).

NG → Adjust valve clearance.

OK ↓

13	Check valve timing (Check for loose and jumping teeth of timing belt) (See page EM–18).

NG → Adjust valve timing (Repair or replace timing belt).

OK ↓

14	Check fuel pressure (See page SF–7).

NG → Check and repair fuel pump, pressure regulator, fuel pipe line and filter (See page SF–1).

OK →

15	Check mass air flow meter (See page SF–26).

NG → Repair mass air flow meter.

OK →

16	Check engine coolant temp. sensor (See page SF–39).

NG → Replace engine coolant temp. sensor.

OK →

Check intermittent problems (See page DI–3).

DTC	P0325	Knock Sensor 1 Circuit (Bank 1 or Single Sensor)

DTC	P0327	Knock Sensor 1 Circuit Low Input (Bank 1 or Single Sensor)

DTC	P0328	Knock Sensor 1 Circuit Input (Bank 1 or Single Sensor)

DTC	P0330	Knock Sensor 2 Circuit (Bank 2)

DTC	P0332	Knock Sensor 2 Circuit Low Input (Bank 2)

DTC	P0333	Knock Sensor 2 Circuit High Input (Bank 2)

CIRCUIT DESCRIPTION

The knock sensors are fitted on the right bank and left bank of the cylinder block to detect the engine knocking. Each this sensor contains a piezoelectric element which generates a voltage when it becomes deformed, which occurs when the cylinder block vibrates due to knocking. If engine knocking occurs, ignition timing is retarded to suppress it.

DTC No.	DTC Detection Condition	Trouble Area
P0325 P0327 P0328	No knock sensor 1 signal to ECM with engine speed between 1,500 rpm and 5,500 rpm	▲Open or short in knock sensor 1 circuit ▲Knock sensor 1 (looseness) ▲ECM
P0330 P0332 P0333	No knock sensor 2 signal to ECM with engine speed between 1,500 rpm and 5,500 rpm	▲Open or short in knock sensor 2 circuit ▲Knock sensor 2 (looseness) ▲ECM

WIRING DIAGRAM

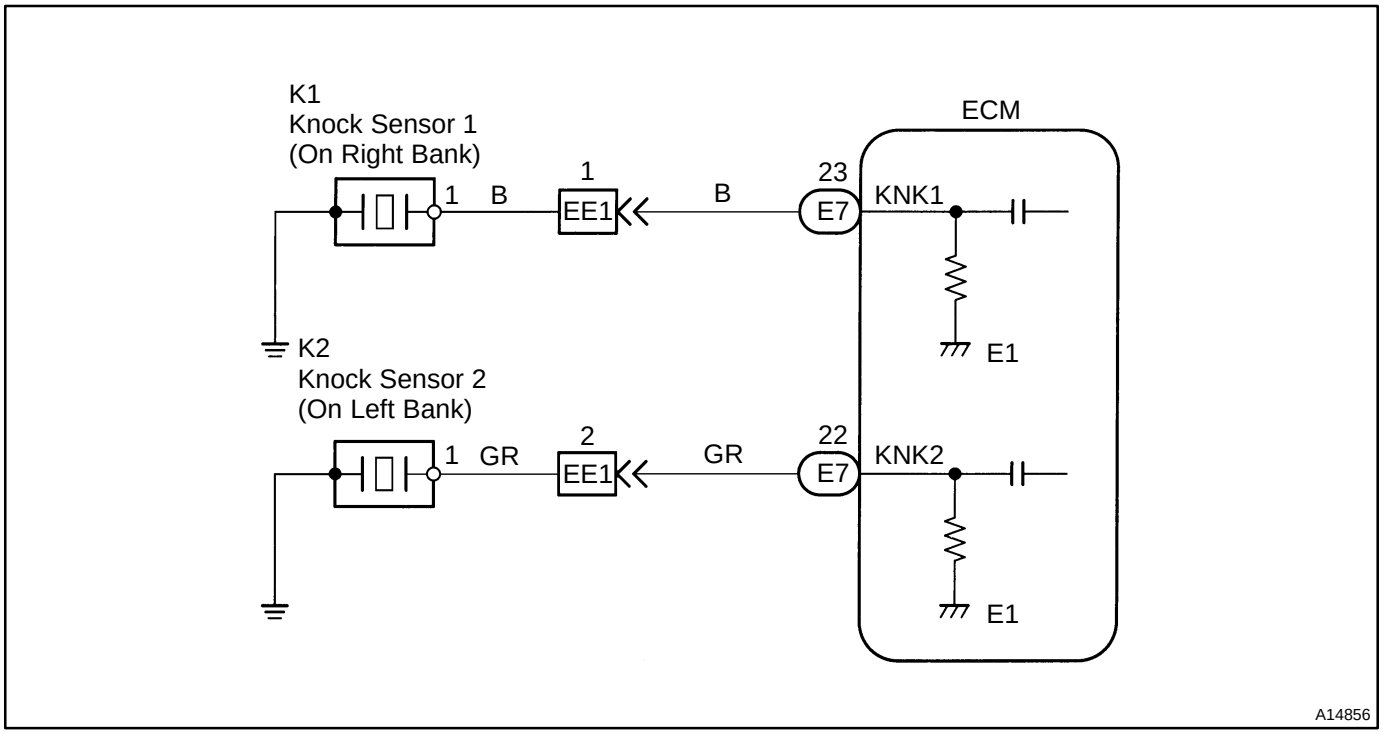

INSPECTION PROCEDURE

HINT:

- ▲ DTC P0325, P0327, P0328 is for the right bank knock sensor circuit.
- ▲ DTC P0330, P0332, P0333 is for the left bank knock sensor circuit.
- ▲ Read freeze frame data using hand–held tester or OBD II scan tool, as freeze frame data records the engine conditions when a malfunction is detected. When troubleshooting, it is useful for determining whether the vehicle was running or stopped, the engine was warmed up or not, the air–fuel ratio was lean or rich, etc. at the time of the malfunction.

1	Connect OBD II scan tool or hand–held tester, and check knock sensor circuit.

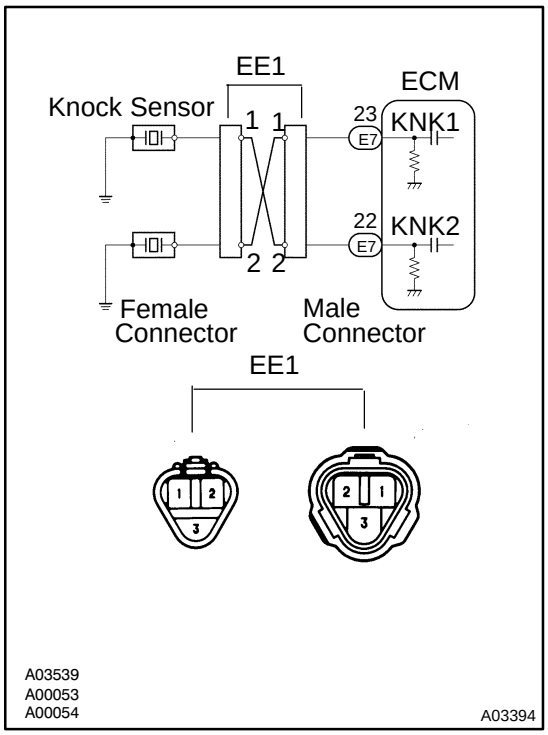

PREPARATION:

(a) Connect the OBD II scan tool or hand–held tester to the DLC3.

(b) Disconnect the EE1 connector.

(c) Connect the terminals of the disconnected EE1 male connector and EE1 female as follows.

Male connector – Female connector
Terminal 1 – Terminal 2
Terminal 2 – Terminal 1

(d) Turn the ignition switch ON and push the OBDII scan tool or hand–held tester main switch ON.

(e) After the engine is warmed up, perform quick racing to 4,000 rpm 3 times.

CHECK:

Check the DTC.

RESULT:

Type I	DTC same as when vehicle brought in P0325 → P0325 or P0330 → P0330
Type II	DTC different to when vehicle brought in P0325 → P0330 or P0330 → P0325

Reference: INSPECTION USING OSCILLOSCOPE

▲ With the engine racing (4,000 rpm), Check the waveform between terminals KNK1, KNK2 of the ECM connector and body ground.

HINT:

The correct waveform is as shown.

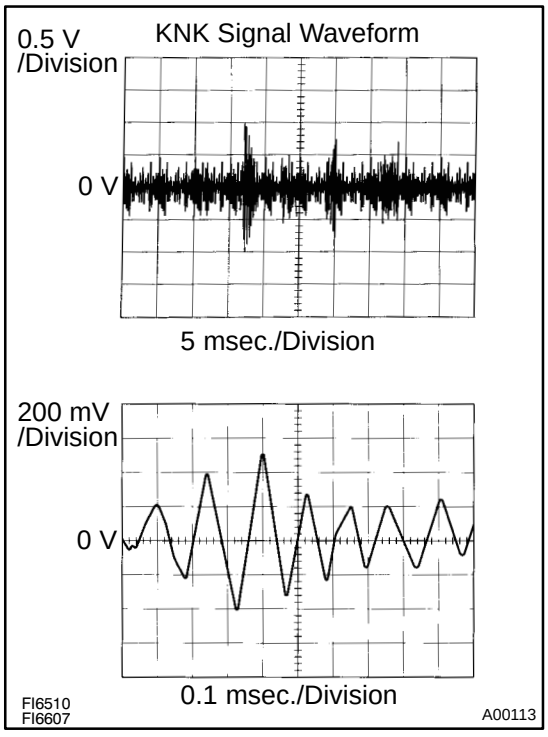

▲ Spread the time on the horizontal axis, and confirm that period of the wave is 0.141 msec.
(Normal mode vibration frequency of knock sensor: 7.1 kHz)

HINT:

If normal mode vibration frequency is not 7.1 kHz, the sensor is malfunctioning.

Type II	Go to step 3.

Type I

2	**Check for open and short in harness and connector between EE1 connector and ECM (See page IN–27).**

NG → **Repair or replace harness or connector.**

OK

Check and replace ECM (See page IN–27).

3	**Check for open and short in harness and connector between EE1 connector and knock sensor (See page IN–27).**

HINT:

- If DTC P0325, P0327, P0328 has changed to P0330, P0332, P0333 check the knock sensor circuit on the right bank side.
- If DTC P0330, P0332, P0333 has changed to P0325, P0327, P0328 check the knock sensor circuit on the left bank side.

NG → **Repair or replace harness or connector.**

OK

Replace knock sensor.

DI0S5–16

DTC	P0335	Crankshaft Position Sensor ”A” Circuit

CIRCUIT DESCRIPTION

The crankshaft position sensor, which detects the engine speed and crankshaft angle signal (NE signal), has been installed on the oil pump body.
The NE signal plate has 34 teeth. The NE signal sensor generates 34 signals at every engine revolution. The ECM detects the standard crankshaft angle based on the G2 signal, and the actual crankshaft angle and the engine speed by the NE signal.

DTC No.	DTC Detecting Condition	Trouble Area
P0335	No crankshaft position sensor signal to ECM during cranking (2 trip detection logic)	▲Open or short in crankshaft position sensor circuit ▲Crankshaft position sensor ▲Crankshaft timing pulley ▲ECM
	No crankshaft position sensor signal to ECM with engine speed 600 rpm or more (2 trip detection logic)	

WIRING DIAGRAM

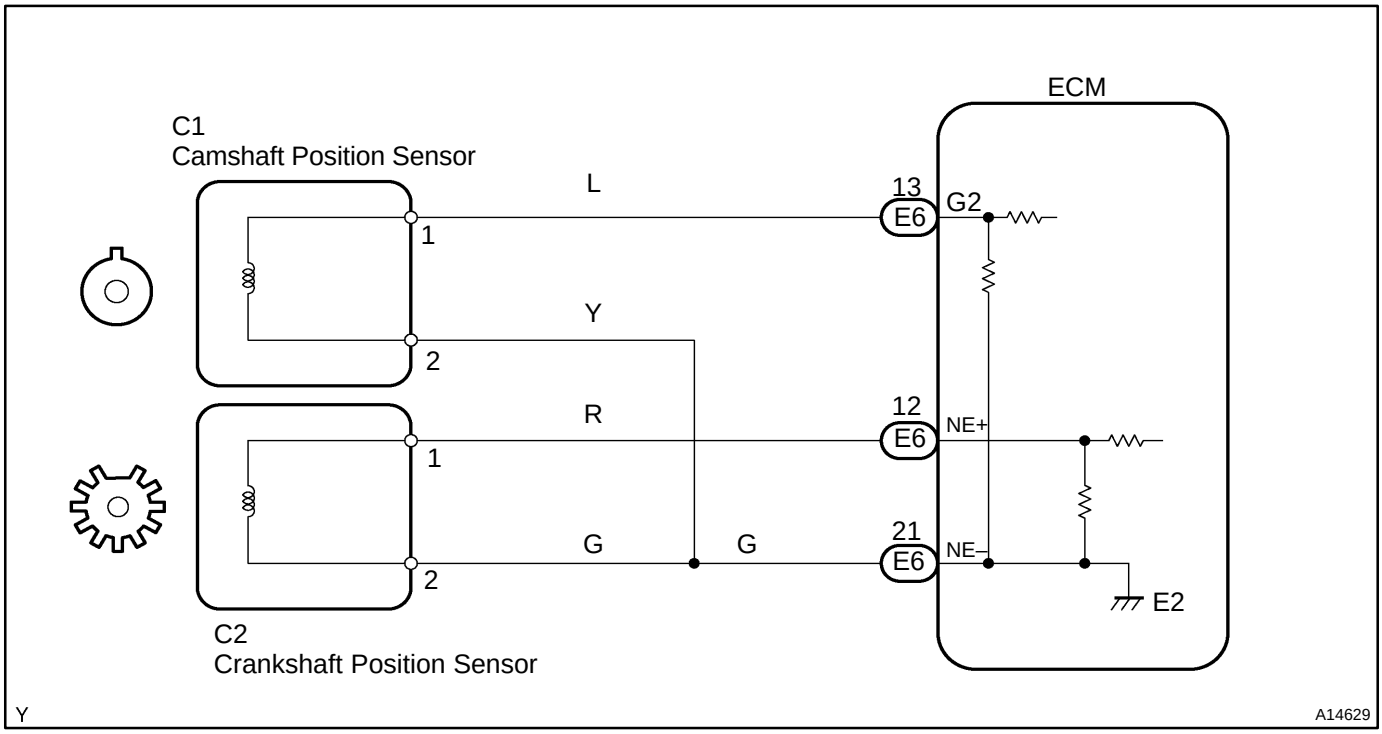

INSPECTION PROCEDURE

HINT:

- ▲ Perform a troubleshooting of DTC P0335 first. If no trouble is found, troubleshoot the following mechanical systems.
- ▲ Read freeze frame data using hand–held tester or OBD II scan tool, as freeze frame data records the engine conditions when a malfunction is detected. When troubleshooting it is useful for determining whether the vehicle was running or stopped, the engine was warmed up or not, the air–fuel ratio was lean or rich, etc. at the time of the malfunction.

1	**Check resistance of crankshaft position sensor (See page IG–13).**

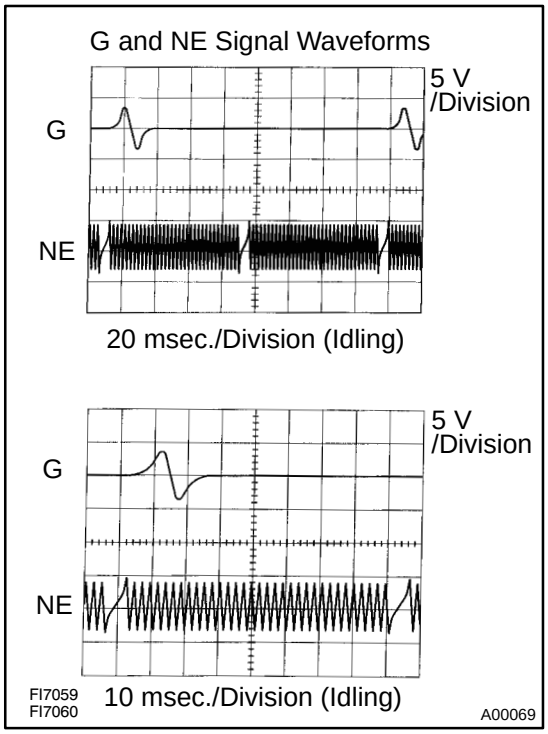

Reference: INSPECTION USING OSCILLOSCOPE
During cranking or idling, check the waveforms between terminals G2 and NE–, and NE+ and NE– of the ECM connector.
HINT:
The correct waveforms are as shown.

NG → **Replace crankshaft position sensor.**

OK

2	**Check for open and short in harness and connector between ECM and crankshaft position sensor (See page IN–27).**

NG → **Repair or replace harness or connector.**

OK

3	**Inspect sensor installation and teeth of crankshaft timing pulley.**

NG → **Tighten the sensor. Replace crankshaft timing pulley.**

OK

Check and replace ECM (See page IN–27).

DIA9I–01

DTC	P0339	Crankshaft Position Sensor ”A” Circuit Intermittent

CIRCUIT DESCRIPTION

Refer to DTC P0335 on page DI–88.

DTC No.	DTC Detection Condition	Trouble Area
P0339	No crankshaft position sensor signal to ECM with engine speed 1,000 rpm or more	▲Open or short in crankshaft position sensor circuit ▲Crankshaft position sensor ▲Crankshaft timing pulley ▲ECM

WIRING DIAGRAM

Refer to DTC P0335 on page DI–88.

INSPECTION PROCEDURE

Refer to DTC P0335 on page DI–88.

DTC	P0340	Camshaft Position Sensor ”A” Circuit (Bank 1 or Single Sensor)

DTC	P0341	Camshaft Position Sensor ”A” Circuit Range/Performance (Single Sensor)

CIRCUIT DESCRIPTION

The camshaft position sensor (G2 signal) consists of a magnet, iron core and pickup coil.
The G signal plate has 1 tooth on its outer circumference and is mounted on the RH camshaft timing pulley. When the camshafts rotate, the protrusion on the signal plate and the air gap on the pickup coil change, causing fluctuations in the magnetic field and generating an electromotive force in the pickup coil.
The NE signal plate has 34 teeth and is mounted on the crankshaft timing pulley. The NE signal sensor generates 34 signals at every engine revolution. The ECM detects the standard crankshaft angle based on the G signal, the actual crankshaft angle and the engine speed by the NE signal.

DTC No.	DTC Detection Condition	Trouble Area
P0340 P0341	No camshaft position sensor signal to ECM during cranking (2 trip detection logic)	▲Open or short in camshaft position sensor circuit ▲Camshaft position sensor ▲RH camshaft timing pulley ▲ECM
	No camshaft position sensor signal to ECM with engine speed 600 rpm or more	

WIRING DIAGRAM

Refer to DTC P0335 on page DI–88.

INSPECTION PROCEDURE

HINT:
Read freeze frame data using hand–held tester or OBDII scan tool, as freeze frame records the engine conditions when a malfunction is detected. When troubleshooting, it is useful for determining whether the vehicle was running or stopped, the engine was warmed up or not, the air–fuel ratio was lean or rich, etc. at the time of the malfunction.

1	**Check resistance of camshaft position sensor (See page IG–1).**

Reference: INSPECTION USING OSCILLOSCOPE
Refer to DTC P0335 on page DI–88.

NG → **Replace camshaft position sensor.**

OK

2	Check for open and short in harness and connector between ECM and camshaft position sensor (See page IN–27).

NG → Repair or replace harness or connector.

OK

3	Inspect sensor installation (See page EM–49) and tooth of RH camshaft timing pulley (See page EM–20).

NG → Tighten sensor. Replace RH camshaft timing pulley

OK

Check and replace ECM (See page IN–27).

DIA9K–01

DTC	P0351	Ignition Coil ”A” Primary/Secondary Circuit

CIRCUIT DESCRIPTION

A Direct Ignition System (DIS) has been adopted. The DIS improves the ignition timing accuracy, reduces high–voltage loss, and enhances overall reliability of the ignition system by eliminating the distributor.
The DIS is a 2–cylinder simultaneous ignition system which ignites 2 cylinders simultaneously with one ignition coil. In the 2–cylinder simultaneous ignition system, each of the 2 spark plugs is connected to the end of the secondary winding. High voltage generated in the secondary winding is applied directly to the spark plugs. The sparks of the 2 spark plugs passes simultaneously from the center electrode to the ground electrode. The ECM determines the ignition timing end outputs the ignition signal (IGT) for each cylinder. Based the on IGT signals, the igniter controls the primary ignition signals (IGC) for all ignition coils. At the same time, the igniter also sends an ignition confirmation signal (IGF) as a fail–safe measure to the ECM.

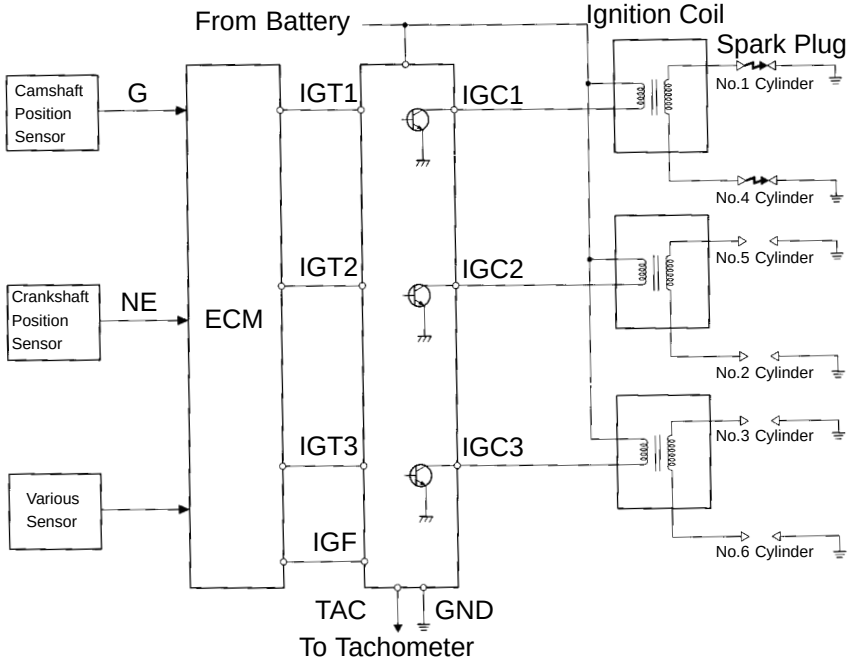

S00251

DTC No.	DTC Detection Condition	Trouble Area
P0351	Condition (a) is repeated 3 times consecutively during 6 consecutively IGT signals while engine is running: (a) IGF signal is not input to ECM for 2 or more ignitions	▲Ignition system ▲Open or short in IGF and IGT circuit from igniter to ECM ▲Igniter ▲Ignition coil ▲ECM

WIRING DIAGRAM

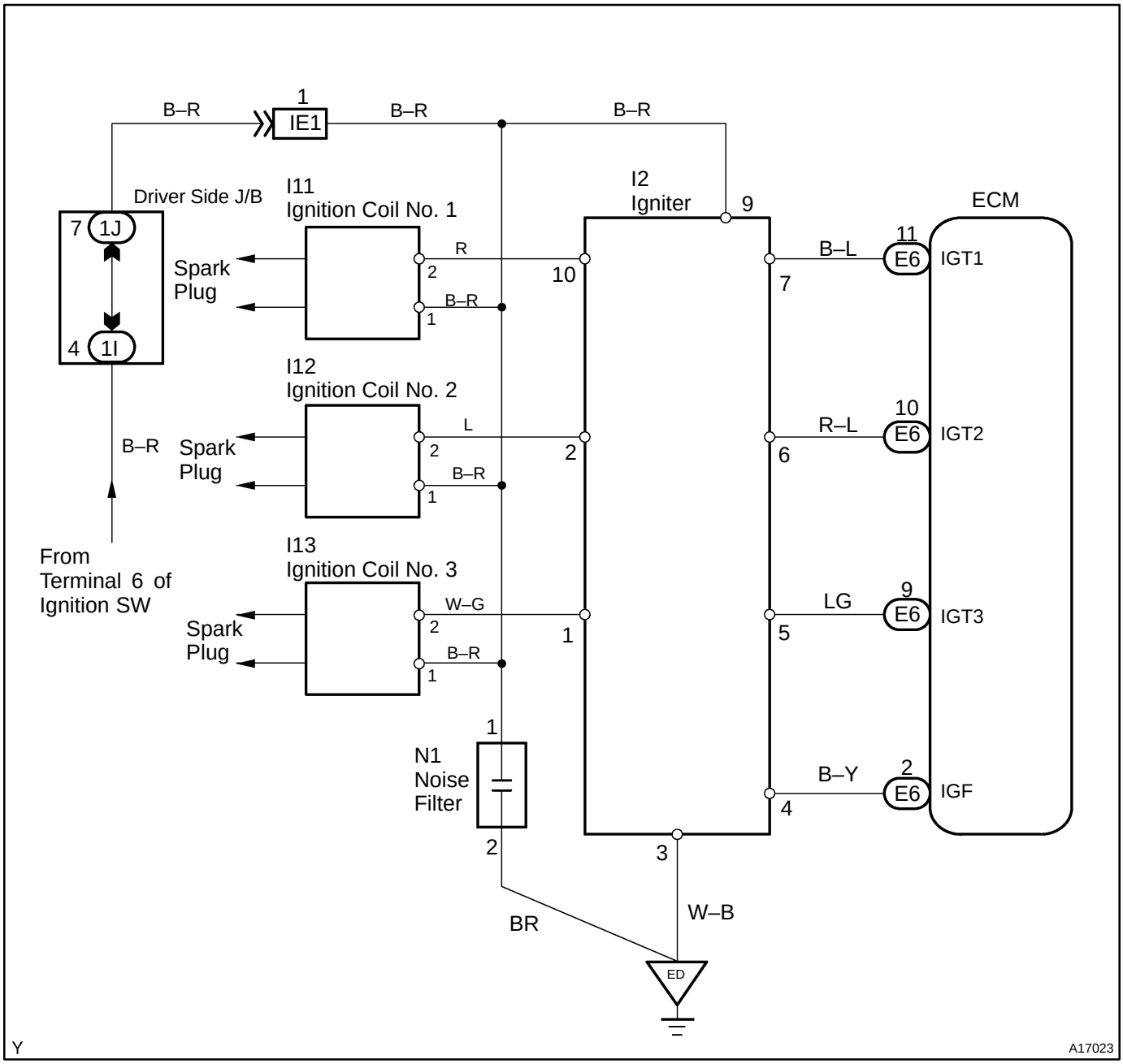

INSPECTION PROCEDURE

HINT:

Read freeze frame data using the hand–held tester or OBD II scan tool, as freeze frame data records the engine conditions when the malfunction is detected. When troubleshooting, it is useful for determining whether the vehicle was running or stopped, the engine was warmed up or not, the air–fuel ratio was lean or rich, etc. at the time of the malfunction.

1	**Check spark plug and spark of misfiring cylinder (See page DI–69).**

NG → **Go to step 4.**

OK

2	**Check for open and short in harness and connector in IGF signal circuit between ECM and igniter (See page IN–27).**

NG → **Repair or replace harness or connector.**

OK

3	**Disconnect igniter connector and check voltage between terminal IGF of ECM connector and body ground.**

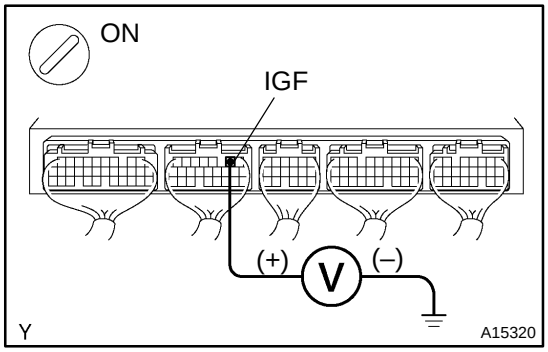

PREPARATION:

(a) Disconnect the igniter connector.
(b) Remove the glove compartment (See page SF–49).
(c) Turn the ignition switch ON.

CHECK:

Measure the voltage between terminal IGF of the ECM connector and body ground.

OK:

Voltage: 4.5 – 5.5 V

OK → **Replace igniter.**

NG

Check and replace ECM (See page IN–27).

4	**Check for open and short in harness and connector in IGT1 – IGT3 signal circuit between ECM and igniter (See page IN–27).**

NG → **Repair or replace harness or connector.**

OK

5	**Check voltage between terminals IGT1 – IGT3 of ECM connector and body ground.**

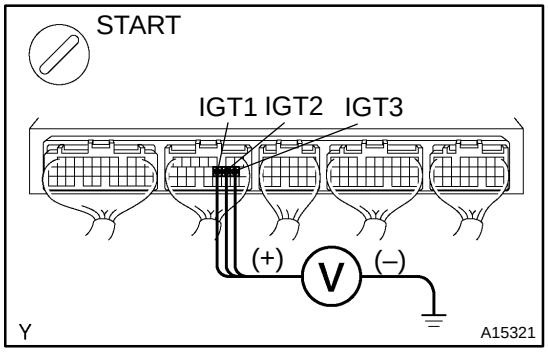

PREPARATION:
Remove the glove compartment (See page SF–49).
CHECK:
Measure the voltage between terminal IGT1 – IGT3 of the ECM connector and body ground when the engine is cranked.
OK:
Voltage: More than 0.1 V and less than 4.5 V

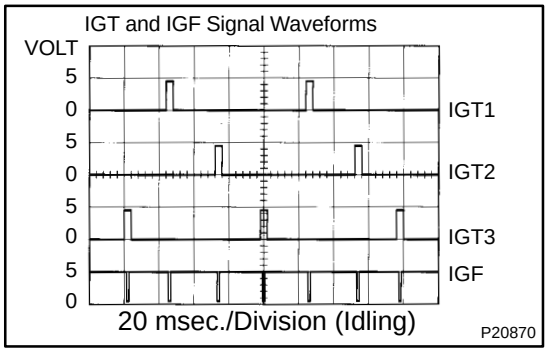

Reference: INSPECTION USING OSCILLOSCOPE
During idling, check the waveforms between terminals IGT1 – IGT3, and IGF and E1 of the ECM connector.
HINT:
The correct waveforms are as shown.

NG → **Check and replace ECM (See page IN–27).**

OK

6	Disconnect igniter connector, and check voltage between terminals IGT1 – IGT3 of ECM connector and body ground.

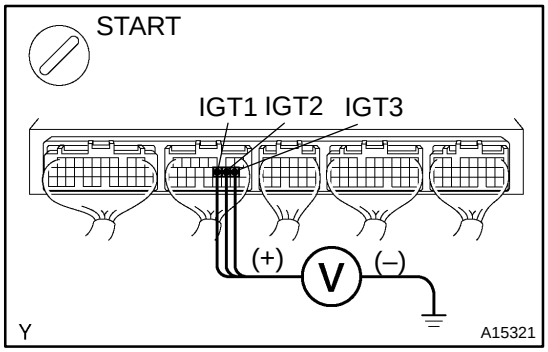

PREPARATION:

(a) Disconnect the igniter connector.

(b) Remove the glove compartment (See page SF–49).

CHECK:

Measure the voltage between terminals IGT1 – IGT3 of the ECM connector and body ground when the engine is cranked.

OK:

Voltage: More than 0.1 V and less than 5.0 V

NG	Check and replace ECM (See page IN–27).

OK

7	Check voltage between terminal 9 of igniter connector and body ground.

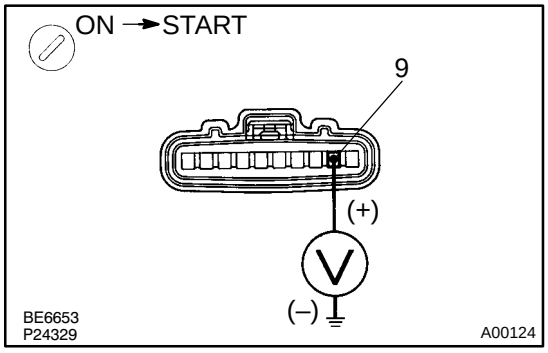

PREPARATION:

Disconnect the igniter connector.

CHECK:

Measure the voltage between terminal 9 of the igniter connector and body ground when the ignition switch is turned to ON and START positions.

OK:

Voltage: 9 – 14 V

NG	Check and repair igniter power source circuit.

OK

8	Check for open and short in harness and connector between ignition switch and ignition coil, and ignition coil and igniter (See page IN–27).

NG	Repair or replace harness or connector.

OK

9	Check ignition coil (See page IG–1).

NG → Replace ignition coil.

OK →

Replace igniter.

DTC	P0420	Catalyst System Efficiency Below Threshold (Bank 1)

CIRCUIT DESCRIPTION

The ECM observes the waveform of the heated oxygen sensor located behind the catalyst to determine whether the catalyst is performance has deteriorated. If the catalyst is functioning normally, the waveform of the heated oxygen sensor located behind the catalyst switches back and forth between rich and lean much more slowly. When the waveform of the heated oxygen sensor located behind the catalyst alternates flatteringly between rich and lean, it indicates that catalyst performance has deteriorated.

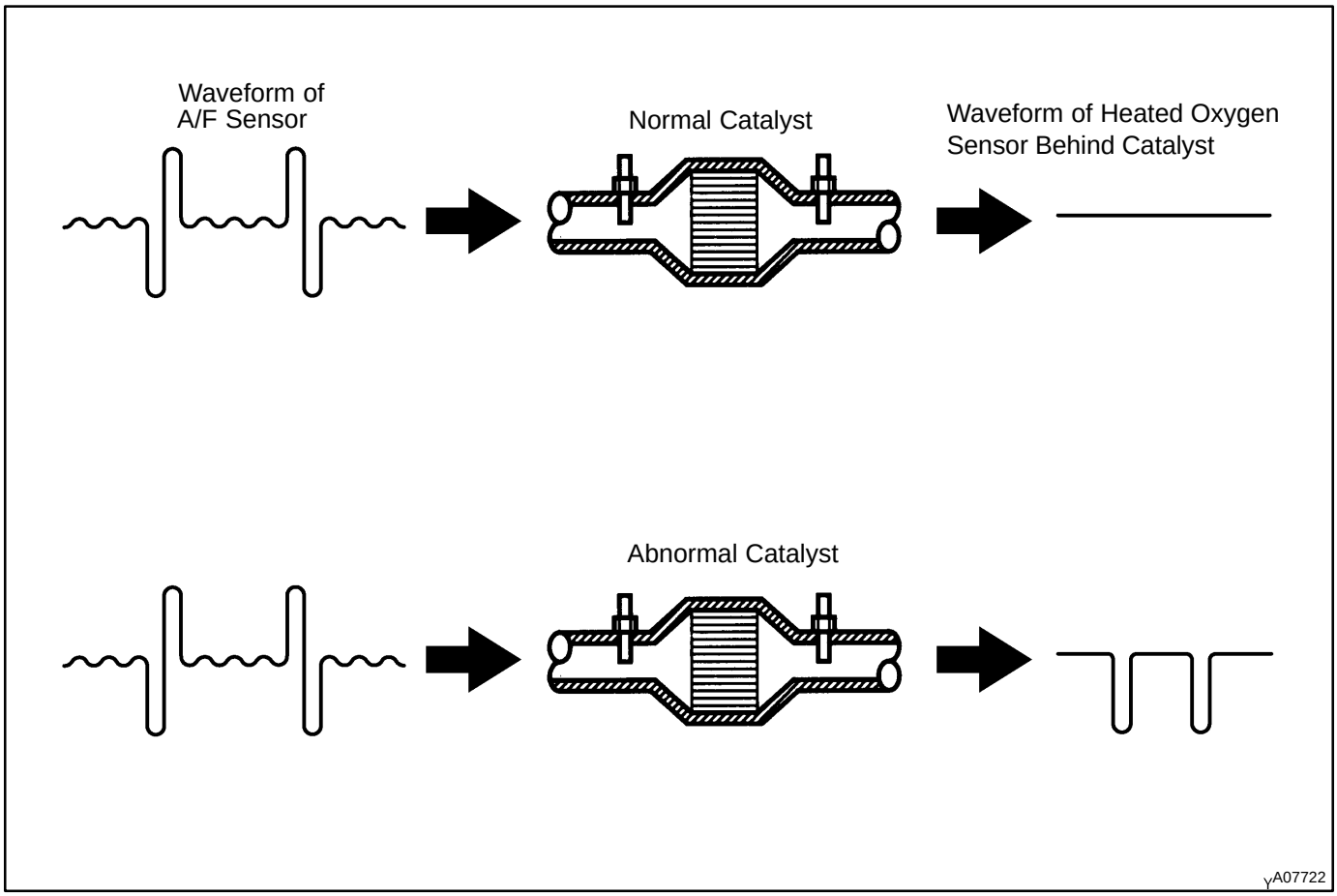

DTC No.	DTC Detection Condition	Trouble Area
P0420	After engine and catalyst are warmed up, and while vehicle is driven within set value and engine speed range, waveform of heated oxygen sensor (bank 1 sensor 2) alternates flatteringly between rich and lean (2 trip detection logic)	▲Gas leakage in exhaust system ▲A/F sensor (bank 1 sensor 1) ▲Heated oxygen sensor (bank 1 sensor 2) ▲Three–way catalytic converter

CONFIRMATION ENGINE RACING PATTERN

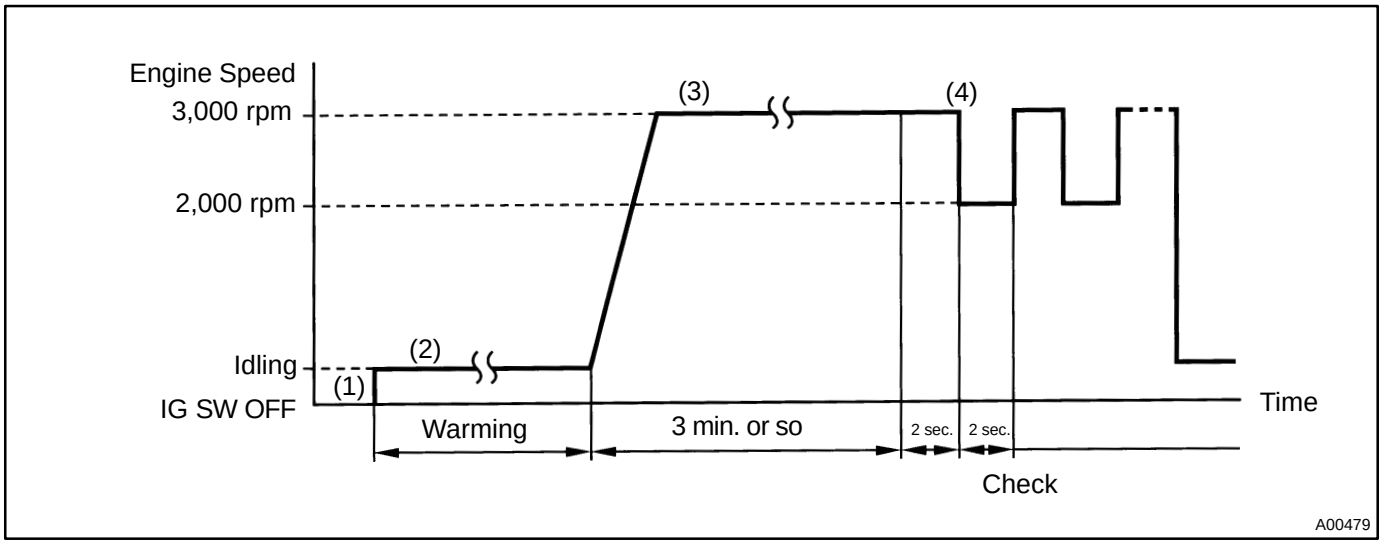

(1) Connect the OBD II scan tool or hand–held tester to the DLC3.
(2) Start the engine and warm it up with all the accessories switched OFF until the water temperature is stable.
(3) Race the engine at 2,500 – 3,000 rpm for about 3 min.
(4) When racing the engine at 3,000 rpm for 2 sec. and 2,000 rpm for 2 sec. alternately, check the waveform of the heated oxygen sensor (bank 1 sensor 2).

INSPECTION PROCEDURE

HINT:
Read freeze frame data using hand–held tester or OBD II scan tool, as freeze frame data records the engine conditions when a malfunction is detected. When troubleshooting, it is useful for determining whether the vehicle was running or stopped, the engine was warmed up or not, the air–fuel ratio was lean or rich, etc. at the time of the malfunction.

1	**Are there any other codes (besides DTC P0420) being output?**

YES → **Go to relevant DTC chart.**

NO

2	**Check gas leakage on exhaust system.**

NG → **Repair or replace.**

OK

3	Check A/F sensor (bank 1 sensor 1) (See page SF–46).

NG → Repair or replace.

OK

4	Check heated oxygen sensor (bank 1 sensor 2) (See page SF–47).

NG → Repair or replace.

OK

Replace three–way catalytic converter.

DTC	P0441	Evaporative Emission Control System Incorrect Purge Flow

DTC	P0442	Evaporative Emission Control System Leak Detected (small leak)

DTC	P0446	Evaporative Emission Control System Vent Control Circuit

DTC	P0456	Evaporative Emission Control System Leak Detected (very small leak)

CIRCUIT DESCRIPTION

P0441

The VSV for EVAP is used to purge the evaporative emissions from the fuel tank into the intake manifold. Also, it creates a vacuum inside the fuel tank in unison with the operation of the VSV for CCV (canister closed valve) and leak tests are performed using this vacuum. When the VSV for EVAP remains open (opened malfunction), the vacuum inside the fuel tank does not change. When the VSV for EVAP remains open (opened malfunction), the vacuum inside the fuel tank changes according to the operation of the VSV for CCV.

P0446

The VSV for CCV is open under normal conditions. When the VSV for EVAP is used to purge the evaporative emissions from the fuel tank into the intake manifold, air is drawn from the charcoal canister into the fuel tank. Also, the VSV for CCV has a function that relieves the pressure in the case that the pressure inside the fuel tank has rapidly increased. Also, it creates a vacuum inside the fuel tank in unison with the operation of the VSV for EVAP and leak tests are performed using this vacuum.
When the VSV for CCV remains closed (closed malfunction), the vacuum created inside the fuel tank cannot be relieved. When the VSV for CCV remains open (opened malfunction), it cannot create a large vacuum.

P0442, P0456

The vapor pressure sensor, VSV for EVAP and VSV for CCV are used to detect abnormalities in the evaporative emission control system.
The ECM judges whether there abnormalities exit in the evaporative emission control system, based on the signals from the vapor pressure sensor.
If evaporative emissions leak from the components specified within the dotted line Fig. 1 or the vapor pressure sensor malfunctions, ECM records DTC P0442 or P0456.

DTC No.	DTC Detecting Condition	Trouble Area
P0441	Pressure in charcoal canister and fuel tank does not drop during purge control (2 trip detection logic)	◀Vacuum hose cracks, holed blocked, damaged or disconnected ◀Fuel tank cap incorrectly installed ◀Fuel tank cap cracked or damaged ◀Open or short in vapor pressure sensor circuit ◀Vapor pressure sensor ◀Open or short in VSV circuit for EVAP ◀VSV for EVAP ◀Open or short in VSV circuit for CCV ◀VSV for CCV ◀Fuel tank cracked, holed or damaged ◀Charcoal canister cracked, holed or damaged ◀Fuel tank over fill check valve cracked damaged ◀ECM
	During purge cut–off, negative pressure incoming in the charcoal canister and fuel tank will not stop. (2 trip detection logic)	
P0446	When VSV for CCV is ON, pressure in charcoal canister and fuel tank is maintained at atmospheric pressure (2 trip detection logic)	
P0442 P0456	After cold engine start. After VSV for EVAP operation, the VSV for EVAP is turned off sealing the vacuum in the system and the ECM begins to monitor the pressure increase. Some increase is normal. A very rapid, sharp increase in pressure indicates a leak in the EVAP system and sets the DTC P0442. This monitoring method is also able to distinguish what is called the very small leak detection.(DTC P0456) A pressure rise just above normal indicates a very small hole. (2 trip detection logic)	

Fig. 1

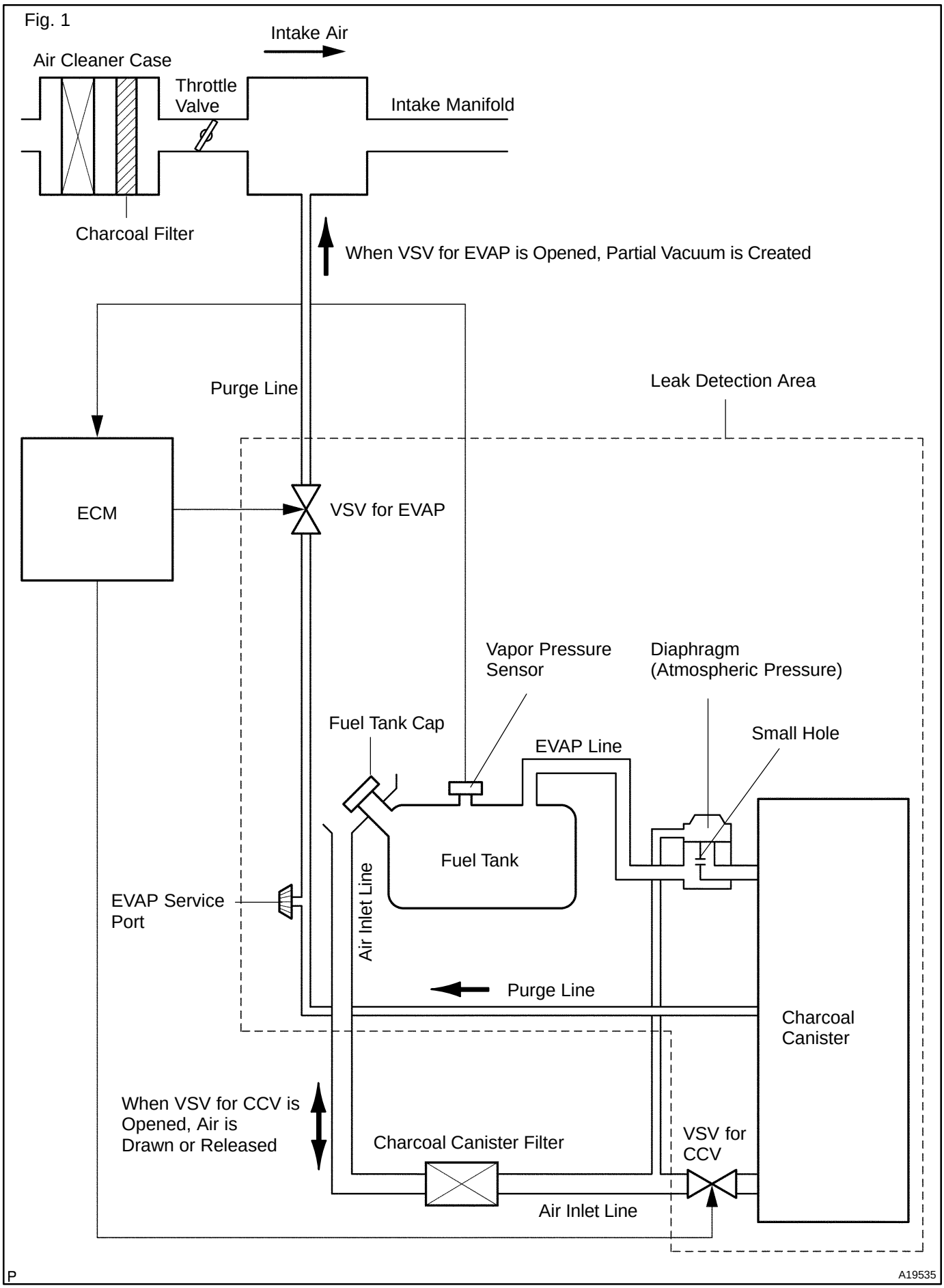
Intake Air
Air Cleaner Case
Throttle Valve
Intake Manifold
Charcoal Filter
When VSV for EVAP is Opened, Partial Vacuum is Created
Purge Line
Leak Detection Area
ECM
VSV for EVAP
Vapor Pressure Sensor
Diaphragm (Atmospheric Pressure)
Fuel Tank Cap
EVAP Line
Small Hole
Fuel Tank
EVAP Service Port
Air Inlet Line
Purge Line
Charcoal Canister
When VSV for CCV is Opened, Air is Drawn or Released
Charcoal Canister Filter
VSV for CCV
Air Inlet Line
P
A19535

Leak Check

Initial Condition
▲Cold Start
▲Engine Coolant Temp./Intake Air Temp. nearly Same

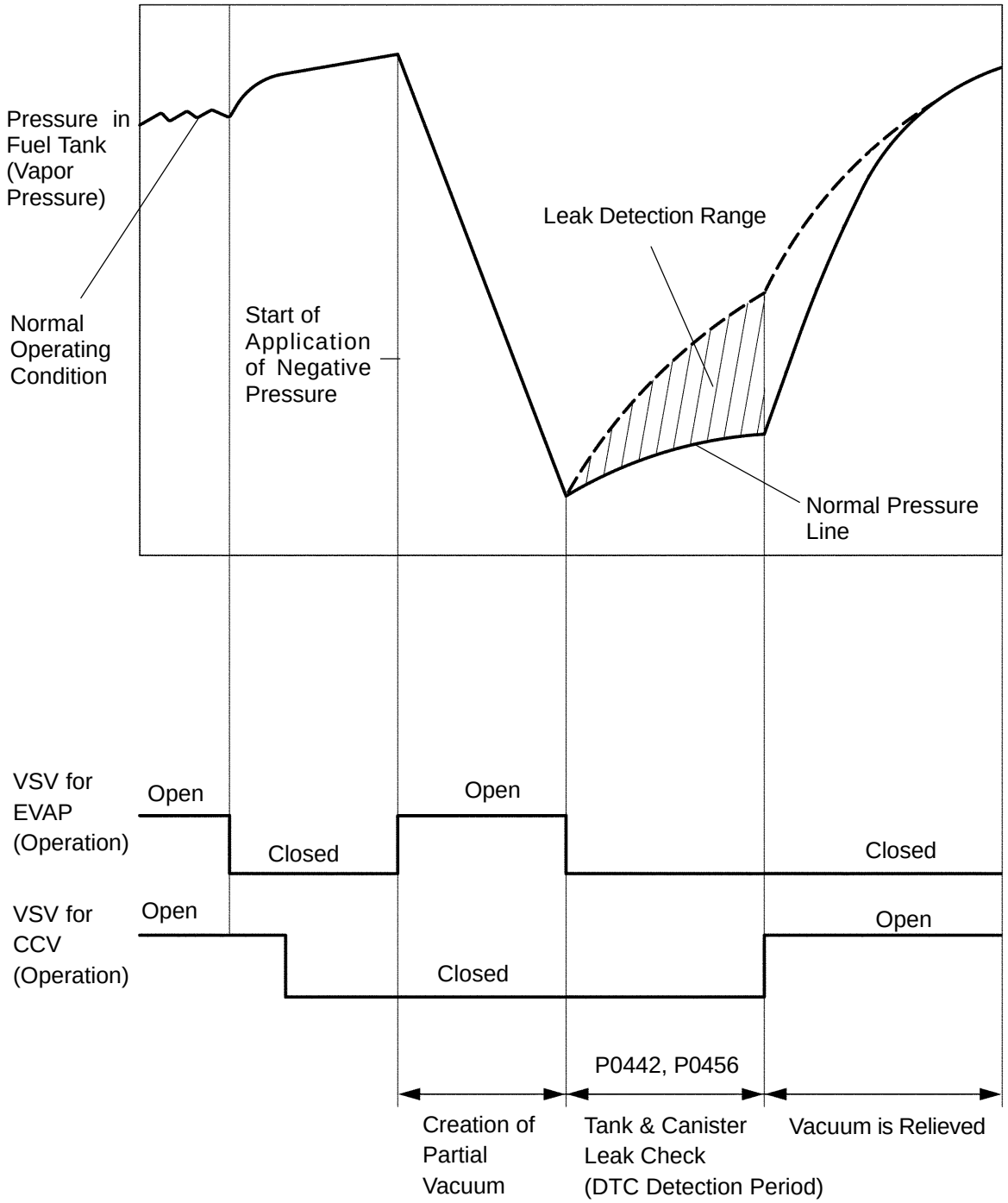

VSV for EVAP is Open: ON
VSV for CCV is Open: OFF

P A19534

VSV Malfunction Condition and DTC Detection Timing

VSV for EVAP is Open: ON
VSV for CCV is Open: OFF

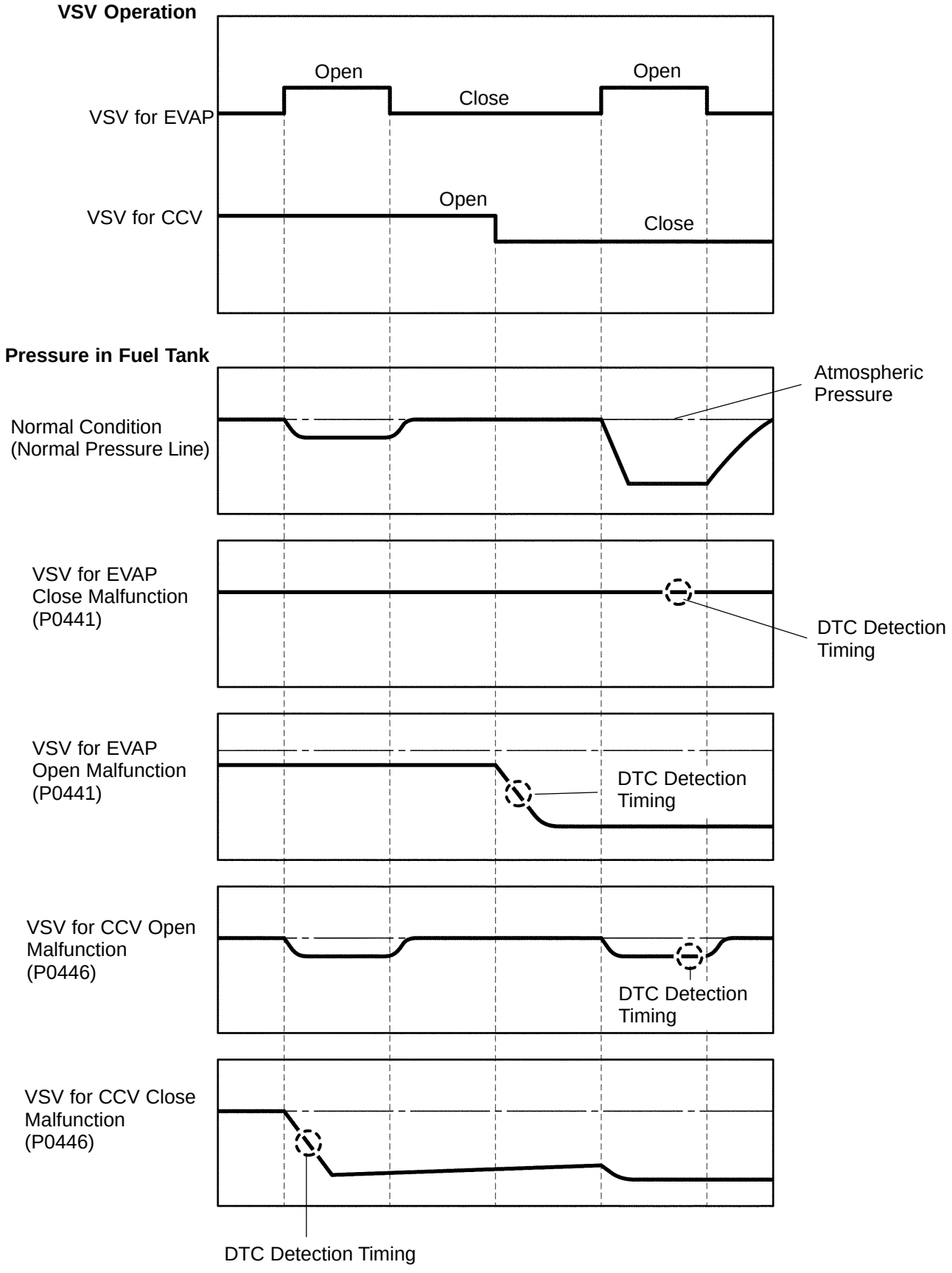

P A19613

EVAP LEAK TEST

(a) Connect the hand–held tester to the DLC3.
(b) Select the ”ENHANCED OBD2/SYSTEM CHECK/EVAP SYS CHECK (or EVAP LEAK TEST)” mode on the hand–held tester.
(c) Perform ”EVAP SYS CHECK (or EVAP LEAK TEST)”.

Display on the Hand–held tester	Scan tool detect a leak on the EVAP system
	Scan tool does not detect a leak on the EVAP system

HINT:
If a leak is detected during this leak test, or if DTCs P0441, P0442, P0446 and P0456 are output simultaneously, conduct a leak test again after repair. If no leak is found at this time, the EVAP system is recovered to normal.

WIRING DIAGRAM

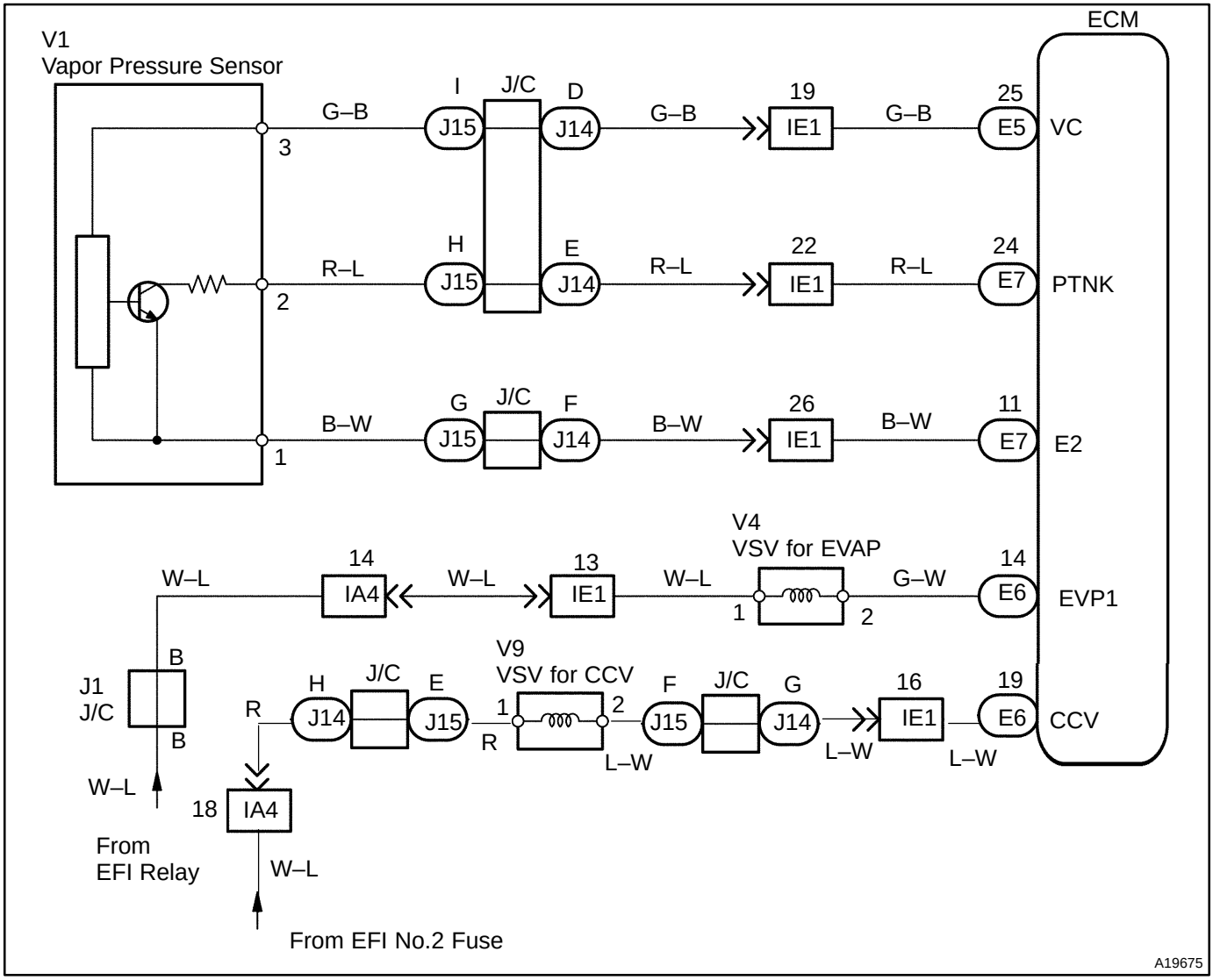

CONFIRMATION READINESS TEST

First Trip Procedure

(a) Vehicle must be cold, ambient temperature approximately between 50˚F – 95˚F.

(b) Intake Air Temp. (IAT) and Engine Coolant Temp. (ECT) sensor almost same value.

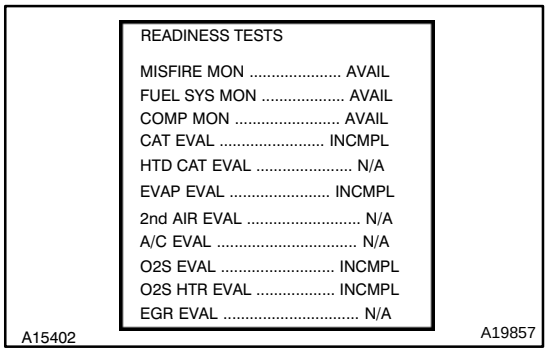

(c) Clear DTC's.

- ◀ Disconnecting the battery terminals or EFI fuse.
- ◀ Readiness tests will show INCMPL (incomplete).

(d) Drive the vehicle according to LA#4 drive cycle. Note the state of Readiness Tests. They will change to COMPL as the evaluation monitors operate and if the system passes. This procedure may take approximately 20 minutes or more.

NOTICE:

Do not shut off the engine – the results will be invalid.

Pass Condition – No Problem Found by the ECM

If the EVAP evaluation monitor shows COMPL, go to the Non–Continuous Test screen.

NOTICE:

Do not shut off the engine – the results will be invalid.

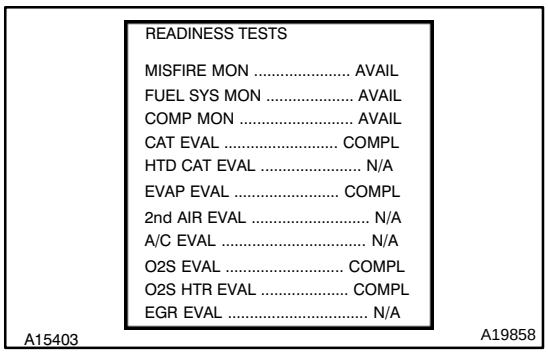

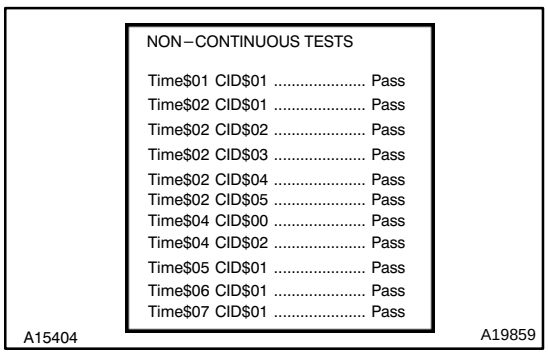

- ◀ To get there, go to Advanced OBD II, Onboard Tests, Non–continuous Tests.
- ◀ If all of the tests in the time $02 category Tests show Pass, the evaluation monitor has operated and no problem was detected.

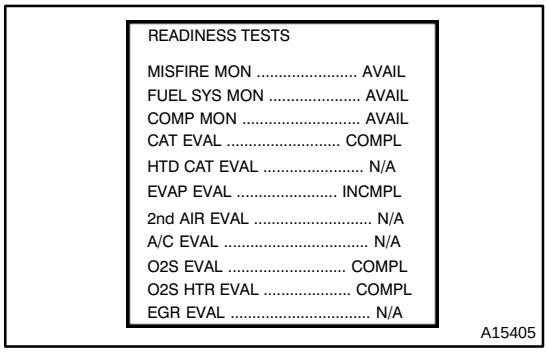

Fail Condition – Problem Detected by the ECM

If the EVAP evaluation monitor shows INCMPL, go to the Non–Continuous Test screen.

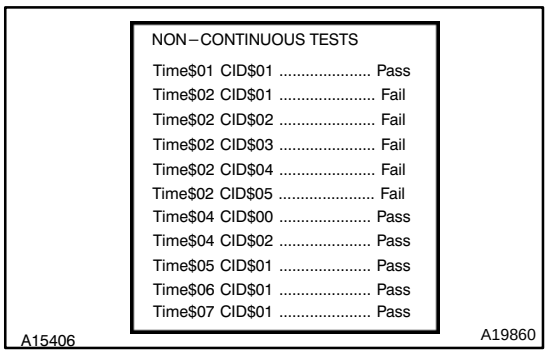

(1) If all Tests show Pass, the following may have occurred.
- ◀ The EVAP evaluation monitor did not operate.
- ◀ The EVAP evaluation monitor did not finish.
- ◀ The ECM withheld judgement.

(2) If one or more of the tests in the time $02 category show Fail, the EVAP evaluation monitor did operate and the ECM detected a problem.

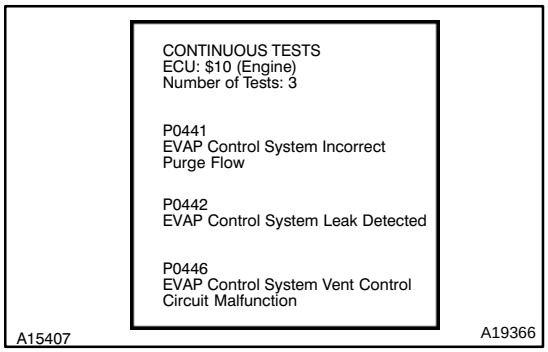

(3) Go to Continuous Tests screen. This is the only place DTC's are listed for the first trip.

NOTICE:

The DTC listed may not be valid. A second trip is needed to confirm the DTC.

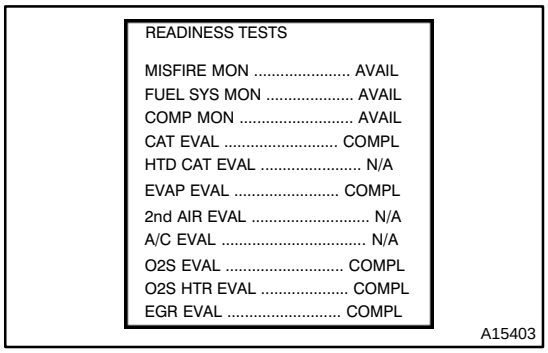

Second Trip Procedure

(a) Vehicle must be cold, ambient temperature approximately between 50°F – 95°F.

(b) Go to Readiness Tests screen.

(c) Drive the vehicle according to LA#4 drive cycle. Note the state of EVAP evaluation monitor. This procedure may take approximately 20 minutes or more.

NOTICE:

Do not shut off the engine – the results will be invalid.

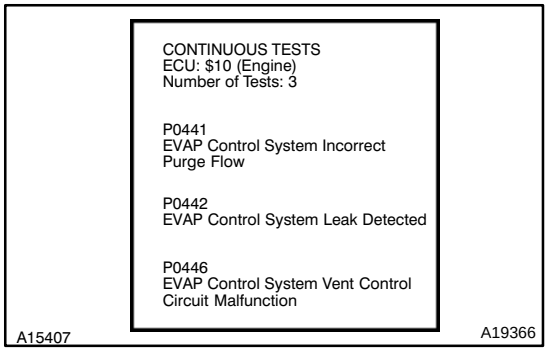

If Readiness Tests changes to COMPL, the EVAP evaluation monitor has operated. Check for any stored DTC's.
- ◀ If a DTC has stored, the problem has been detected and confirmed by the ECM.
- ◀ If no DTC was found, the EVAP monitor operated but no problem was detected.

INSPECTION PROCEDURE

HINT:

- ◀ If DTC P0441 (Purge Flow), P0446 (VSV for CCV), P0451, P0452 or P0453 (Evaporative Pressure Sensor) is output with DTC P0442 or P0456, first troubleshoot DTC P0441, P0446, P0451, P0452 or P0453. If no malfunction is detected, troubleshoot DTC P0442 or P0456 next.
- ◀ Ask the customer whether, after the MIL came on, the customer found the fuel tank cap loose and tightened it. Also ask the customer whether the fuel tank cap was loose when refuelling. If the fuel tank cap was loose, it was the cause of the DTC. If the fuel tank cap was not loose or if the customer was not sure if it was loose, troubleshoot according to the following procedure.
- ◀ If different DTCs that are related to different systems are output simultaneously while terminal E2 is used as a ground terminal, terminal E2 may be open.
- ◀ Read freeze frame data using OBD II scan tool or hand–held tester. Because freeze frame records the engine conditions when the malfunction is detected. When troubleshooting, it is useful for determining whether the vehicle was running or stopped, the engine was warmed up or not, the air–fuel ratio was lean or rich, etc. at the time of the malfunction.
- ◀ When the ENGINE RUN TIME in the freeze frame data is less than 200 seconds, carefully check the vapor pressure sensor.

HINT:

DTC output of each trouble part.

DTC output	Trouble part	Trouble chart	
P0441 only	Open Malfunction of VSV for EVAP	Excute step from 7 to 10	Check and replace of VSV for EVAP
P0446 only	Close Malfunction of VSV for CCV	Excute step from 11 to 15	Check and replace of VSV for CCV
P0442 or P0456 or [P0442 and P0456]	Small or medium leak	Excute step from 2	
P0441 and P0442 and P0446	Large leak (for example fuel tank cap loose) or VSV malfunction (open malfunction of VSV for CCV or close malfunction of VSV for EVAP)	Excute step from 3*	

*: In most cases, troubleshooting can be completed by checking if the fuel tank cap is not loose and repairing the VSV for CCV and VSV for EVAP.

Hand–held tester:

1	**Read output DTC.**

PREPARATION:

Connect the hand–held tester to the DLC3.

CHECK:

(a) Read the output DTC.

(b) Troubleshoot the problems, according to the DTC output.

HINT:

If trouble area is known by the DTC, proceed to the applicable part.

DTC output	Troubleshoot	Proceed to
◀P0442 (small leak) ◀P0456 (very small leak) ◀P0442 and P0456 ◀Other DTC combination	Go to step 2	A
P0441 only (VSV for EVAP malfunction)	Execute step from 7 to 10	B
P0446 only (VSV for CCV malfunction)	Execute step from 11 to 15	C
P0441 and P0446 and P0446	Go to step 3	D

B → **Execute step from 7 to 10.**

C → **Execute step from 11 to 15.**

D → **Go to step 3.**

A

2	**Perform EVAP leak test.**

GO

3	**Check that fuel tank cap is TOYOTA genuine parts.**

NG → **Replace to TOYOTA genuine parts.**

OK

4	**Check that fuel tank cap is correctly installed.**

NG → **Correctly install fuel tank cap.**

OK

5	**Check fuel tank cap (See page EC–6).**

NG → **Replace fuel tank cap.**

OK

6	**Check filler neck for damage.**

PREPARATION:
Remove the fuel tank cap.
CHECK:
Visually inspect the filler neck for damage.

NG → **Replace filler pipe.**

OK

7	Check purge flow.

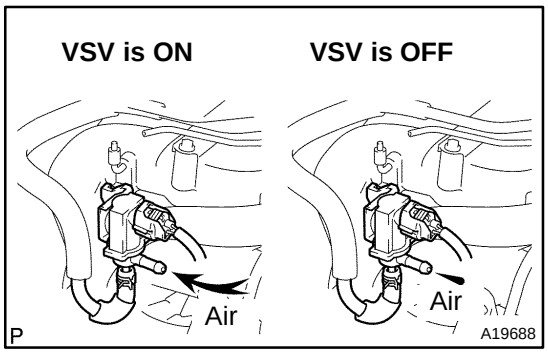

PREPARATION:

(a) Connect the hand–held tester to the DLC3.
(b) Select the ”ENHANCED OBD2/ACTIVE TEST” mode on the hand–held tester.
(c) Disconnect the vacuum hose for the VSV for the EVAP from the charcoal canister.
(d) Start the engine.
(e) Select the item ”EVAP (ALON)/ALL” in the ACTIVE TEST and operate VSV for EVAP.

CHECK:

When the VSV for the EVAP is operated by the hand–held tester, check whether the disconnected hose applies suction to your finger.

OK:

VSV is ON:
Disconnected hose applies suction to your finger.
VSV is OFF:
Disconnected hose applies no suction to your finger.

OK	Go to step 11.

NG

8	Check vacuum hose between intake manifold and VSV for EVAP, and VSV for EVAP and charcoal canister.

CHECK:

(a) Check that the vacuum hose is connected correctly.
(b) Check the vacuum hose for looseness and disconnection.
(c) Check the vacuum hose for cracks, hole, damage and blockage.

NG	Repair or replace.

OK

9	Check operation of VSV for EVAP (See page SF–34).

NG → Replace VSV for EVAP.

OK

10	Check for open and short in harness and connector between EFI main relay (Marking: EFI) and VSV for EVAP, and VSV for EVAP and ECM (See page IN–27).

NG → Repair or replace harness or connector.

OK

Check and replace ECM (See page IN–27).

11	Check VSV for CCV.

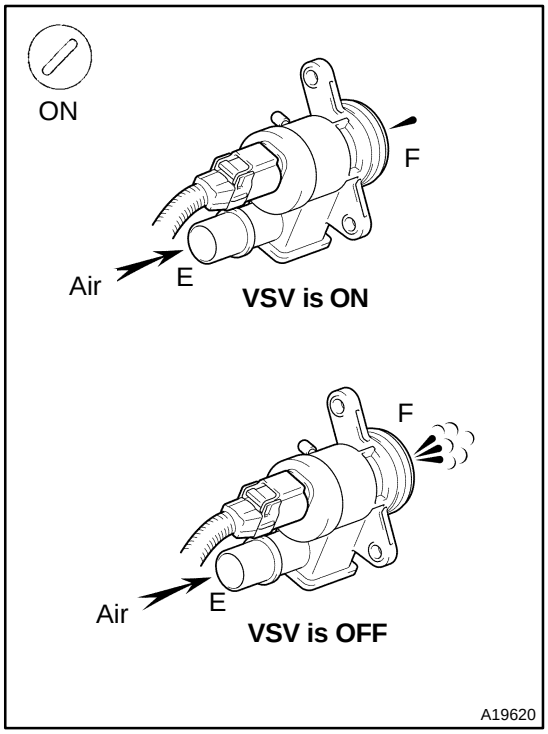

PREPARATION:

(a) Disconnect the vacuum hose for the VSV for the CCV from the charcoal canister.
(b) Turn the ignition switch ON and push the hand–held tester main switch ON.
(c) Select the ”ENHANCED OBD2/ACTIVE TEST” mode on the hand–held tester.
(d) Select the item ”INTAKE CTL VSV/ALL” in the ACTIVE TEST and operate VSV for EVAP.

CHECK:

Check the VSV operation when it is operated by the hand–held tester.

OK:

VSV is ON:
Air does not flow from port E to port F.
VSV is OFF:
Air from port E flows out through port F.

VSV operation	Output DTC	Proceed to
NG	–	A
OK	P0446 output	B
	P0446 does not output	C

B → **Go to step 15.**

C → **Go to step 16.**

A

12	Check leakage for between VSV for CCV and charcoal canister.

CHECK:

(a) Check that the VSV for CCV is correctly installed.
(b) Check the O–ring.

NG → **Repair or replace.**

OK

13	Check operation of VSV for CCV (See page SF–37).

NG → Replace VSV for CCV.

OK

14	Check for open and short in harness and connector between EFI main relay (Marking: EFI) and VSV for CCV, and VSV for CCV and ECM (See page IN–27).

NG → Repair or replace harness or connector.

OK

15	Perform active test for VSV for EVAP (Check that charcoal canister filter is not clogged).

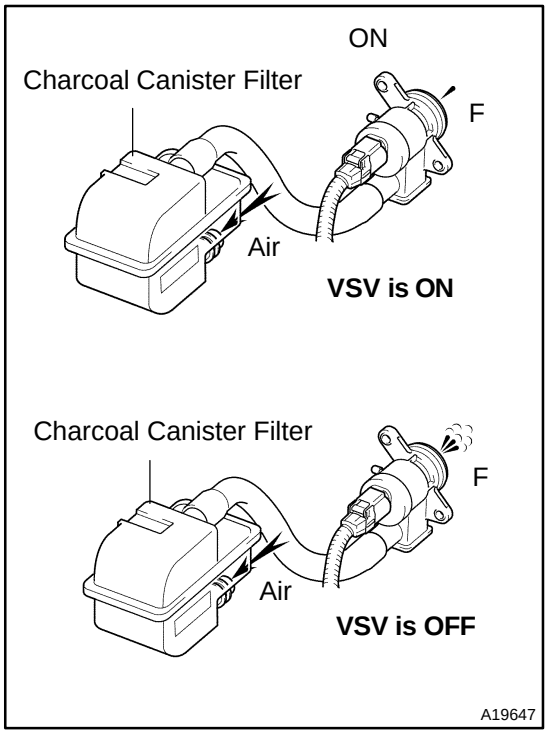

PREPARATION:

(a) Disconnect the vacuum hose for the VSV for the CCV from the charcoal canister.
(b) Turn the ignition switch ON and push the hand–held tester main switch ON.
(c) Select the ”ENHANCED OBD2/ACTIVE TEST” mode on the hand–held tester.
(d) Select the item ”INTAKE CTL VSV/ALL” in the ACTIVE TEST and operate VSV for EVAP.

CHECK:

Check the VSV operation when it is operated by the hand–held tester.

OK:

VSV is ON:
Air does not flow from charcoal canister filter port to port F.
VSV is OFF:
Air from charcoal canister filter port flows out through port F.

NG	Replace charcoal canister filter.

OK

Check and replace ECM (See page IN–27).

16	Check whether hose close to fuel tank have been modified, and check whether there are signs of any accident near fuel tank or charcoal canister.

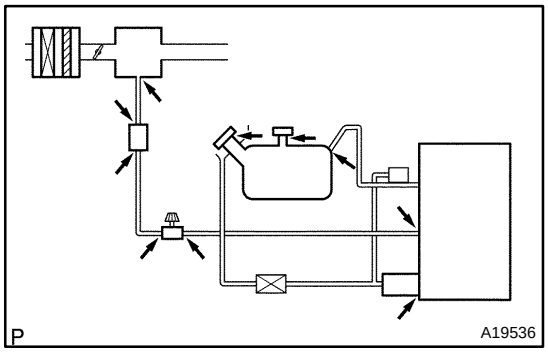

CHECK:

Check for cracks, deformation and loose connection of the following parts:

- Fuel tank
- Charcoal canister
- Fuel tank filler pipe
- Hoses and tubes around fuel tank and charcoal canister

NG	Repair or replace.

OK

17	**Check vacuum hoses between vapor pressure sensor and fuel tank, and charcoal canister and VSV for pressure switching valve.**

CHECK:

(a) Check that the vacuum hose is connected correctly.
(b) Check the vacuum hose for looseness and disconnection.
(c) Check the vacuum hose for cracks, hole and damage.

NG → **Repair or replace.**

OK

18	**Check hoses and tube (purge line and EVAP line).**

CHECK:

(a) Check that the vacuum hose is connected correctly.
(b) Check the vacuum hose for looseness and disconnection.
(c) Check the vacuum hose for cracks, hole and damage.

NG → **Repair or replace.**

OK

19	**Check hose and tube between fuel tank and charcoal canister.**

CHECK:

(a) Check for proper connection of the fuel tank and fuel EVAP pipe (See page EC–6), fuel EVAP pipe and fuel tube under the floor, fuel tube under the floor and charcoal canister.
(b) Check the hose and tube for cracks, hole and damage.

NG → **Repair or replace.**

OK

20	**Check charcoal canister for cracks, hole and damage (See page EC–6).**

NG → **Repair or replace.**

OK

21	Check voltage between terminals VC and E2 of ECM connector.

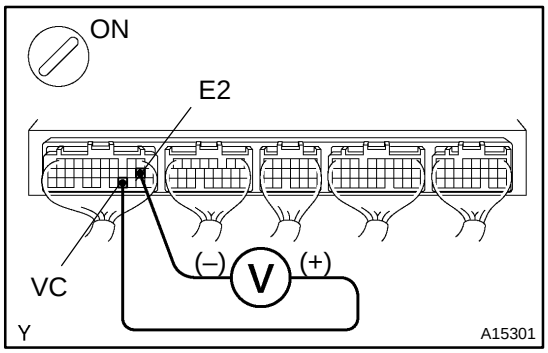

CHECK:

(a) Remove the grove compartment (See page SF–48).

(b) Turn the ignition switch ON.

CHECK:

Measure the voltage between terminals VC and E2 of the ECM connector.

OK:

Voltage: 4.5 – 5.5 V

NG	Check and replace ECM (See page IN–27).

OK

22	Check voltage between terminals PTNK and E2 of ECM connectors.

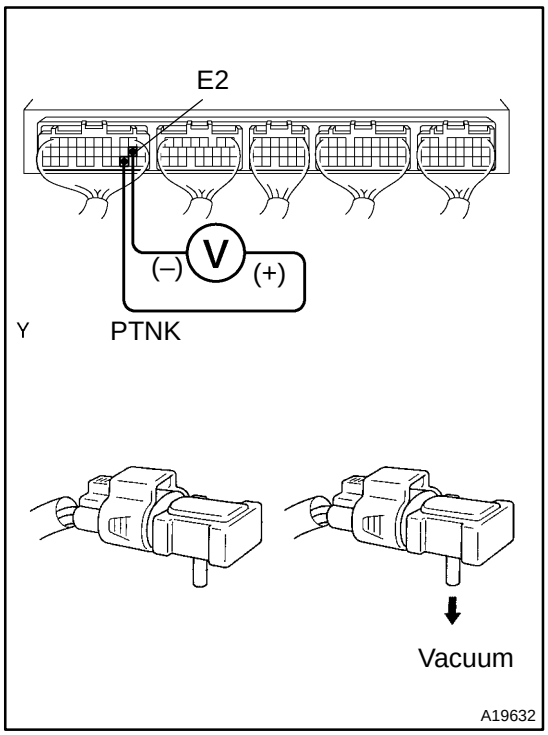

PREPARATION:

(a) Remove the grove compartment (See page SF–48).

(b) Turn the ignition switch ON.

CHECK:

Measure the voltage between terminals PTNK and E2 of the ECM connector.

(1) Disconnect the vacuum hose from the vapor pressure sensor.

(2) Using the MITYVAC (Hand–Held Vacuum Pump), apply a vacuum of 4.0 kPa (30 mmHg, 1.18 in.Hg) to the vapor pressure sensor.

NOTICE:

The vacuum applied to the vapor pressure sensor must be less than 66.7 kPa (500 mmHg, 19.7 in.Hg).

OK:

(1) Voltage: 2.9 – 3.7 V

(2) Voltage: 0.5 V or less

OK	Go to step 24.

NG

23	Check for open and short in harness and connector between vapor pressure sensor and ECM (See page IN–27).

NG → Repair or replace harness or connector.

OK →

Replace vapor pressure sensor.

24	Check fuel tank for cracks and damage.

NG → Replace fuel tank.

OK →

It is likely that vehicle user did not properly close fuel tank cap. Please explain to customer how to properly install fuel tank cap.

OBD II scan tool (excluding hand–held tester):

1	Check that fuel tank cap is TOYOTA genuine parts.

NG → Replace to TOYOTA genuine parts.

OK →

2	Check that fuel tank cap is correctly installed.

NG → Correctly install fuel tank cap.

OK →

3	**Check fuel tank cap (See page EC–6).**

NG → **Replace fuel tank cap.**

OK

4	**Check filler neck for damage.**

PREPARATION:
Remove the fuel tank cap.
CHECK:
Visually inspect the filler neck for damage.

NG → **Replace filler pipe.**

OK

5	**Check whether hose close to fuel tank have been modified, and check whether there are signs of any accident near fuel tank or charcoal canister.**

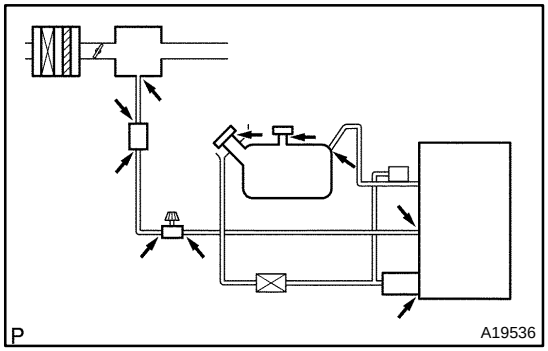

CHECK:
Check for cracks, deformation and loose connection of the following parts:

- Fuel tank
- Charcoal canister
- Fuel tank filler pipe
- Hoses and tubes around fuel tank and charcoal canister

NG → **Repair or replace.**

OK

6	**Check vacuum hoses between vapor pressure sensor and fuel tank, charcoal canister and charcoal canister.**

CHECK:

(a) Check that the vacuum hose is connected correctly.
(b) Check the vacuum hose for looseness and disconnection.
(c) Check the vacuum hose for cracks, hole and damage.

NG → **Repair or connect vacuum hoses.**

OK

7	**Check hose and tube between fuel tank and charcoal canister.**

CHECK:

(a) Check for proper connection of the fuel tank and fuel EVAP pipe (See page EC–6), fuel EVAP pipe and fuel tube under the floor, fuel tube under the floor and charcoal canister.
(b) Check the hose and tube for cracks, hole and damage.

NG → **Repair or replace.**

OK

8	**Check VSV connector for EVAP, VSV connector for CCV and vapor pressure sensor connector for looseness and disconnection.**

NG → **Repair or connect VSV or sensor connector.**

OK

9	Check hoses and tube (purge line and EVAP line).

CHECK:

(a) Check that the vacuum hose is connected correctly.
(b) Check the vacuum hose for looseness and disconnection.
(c) Check the vacuum hose for cracks, hole damage and blockage.

NG → **Repair or replace.**

OK

10	Check voltage between terminals VC and E2 of ECM connector.

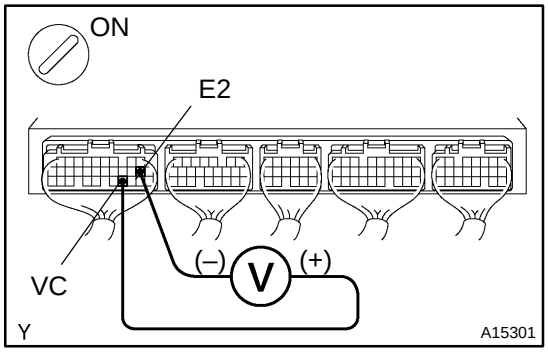

CHECK:

(a) Remove the grove compartment (See page SF–48).
(b) Turn the ignition switch ON.

CHECK:

Measure the voltage between terminals VC and E2 of the ECM connector.

OK:

Voltage: 4.5 – 5.5 V

NG → **Check and replace ECM (See page IN–27).**

OK

11	Check voltage between terminals PTNK and E2 of ECM connector.

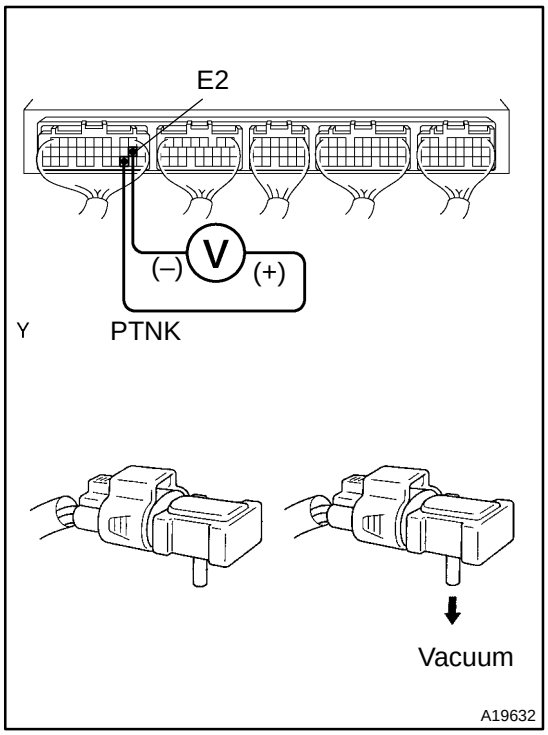

PREPARATION:

(a) Remove the grove compartment (See page SF–48).

(b) Turn the ignition switch ON.

CHECK:

Measure the voltage between terminals PTNK and E2 of the ECM connector.

(1) Disconnect the vacuum hose from the vapor pressure sensor.

(2) Using the MITYVAC (Hand–Held Vacuum Pump), apply a vacuum of 4.0 kPa (30 mmHg, 1.18 in.Hg) to the vapor pressure sensor.

NOTICE:

The vacuum applied to the vapor pressure sensor must be less than 66.7 kPa (500 mmHg, 19.7 in.Hg).

OK:

(1) Voltage: 2.9 – 3.7 V

(2) Voltage: 0.5 V or less

OK	Go to step 13.

NG

12	Check for open and short in harness and connector between vapor pressure sensor and ECM (See page IN–27).

NG	Repair or replace harness or connector.

OK

Replace vapor pressure sensor.

13	Check VSV for EVAP.

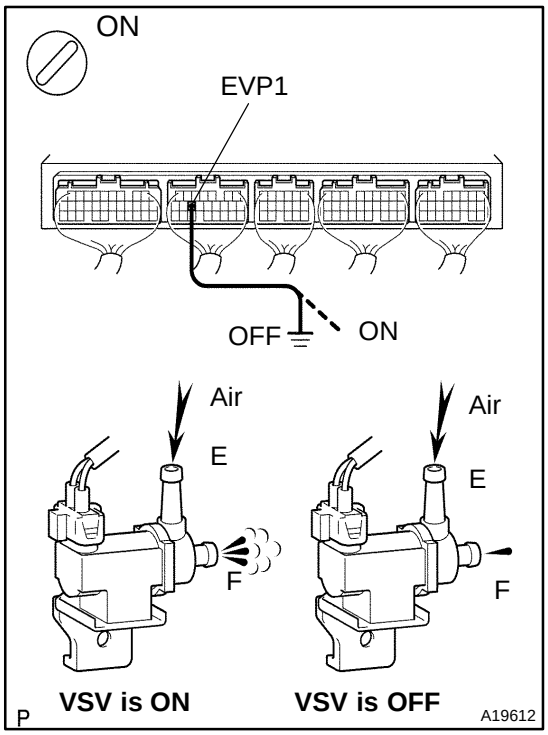

PREPARATION:

(a) Remove the glove compartment (See page SF–48).

(b) Turn the ignition switch ON.

CHECK:

Check the VSV function.

(1) Connect between terminal EVP1 of the ECM connector and body ground (ON).

(2) Disconnect between terminal EVP1 of the ECM connector and body ground (OFF).

OK:

(1) VSV is ON:
Air from port E flows out through port F.
(2) VSV is OFF:
Air does not flow from port E to port F.

OK	Go to step 16.

NG

14	Check operation of VSV for EVAP (See page SF–38).

OK	Go to step 15.

NG

Replace VSV and clean vacuum hoses between throttle body and VSV for EVAP, and VSV for EVAP and charcoal canister, and then check charcoal canister.

15	**Check for open and short in harness and connector between EFI main relay (Marking: EFI) and VSV for EVAP, and VSV for EVAP and ECM (See page IN–27).**

NG → **Repair or replace harness or connector.**

OK

Check and replace ECM (See page IN–27).

16	**Check VSV for CCV.**

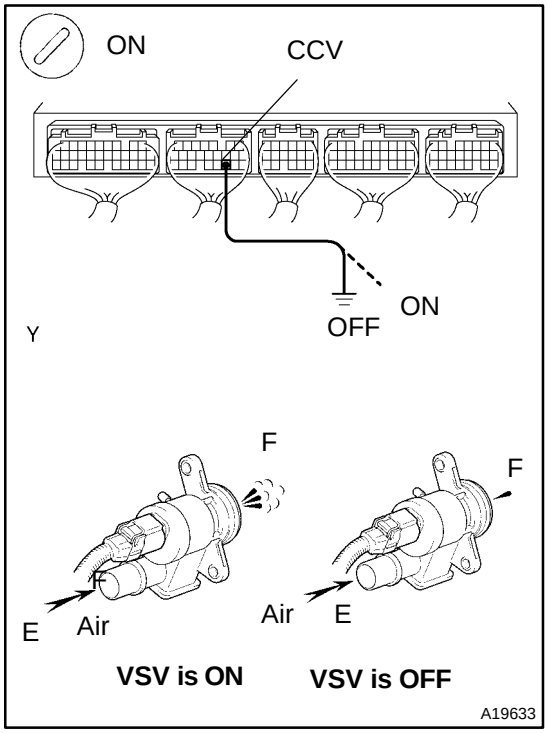

PREPARATION:

(a) Remove the grove compartment (See page SF–48).

(b) Turn the ignition switch ON.

CHECK:

Check the VSV function.

(1) Connect between terminal CCV of the ECM connector and body ground (ON).

(2) Disconnect between terminal CCV of the ECM connector and body ground (OFF).

OK:

VSV is ON:
Air does not flow from port E to port F.
VSV is OFF:
Air from port E flows out through port F.

OK → **Go to step 20.**

NG

17	Check charcoal canister filter (Check that charcoal canister filter is not clogged).

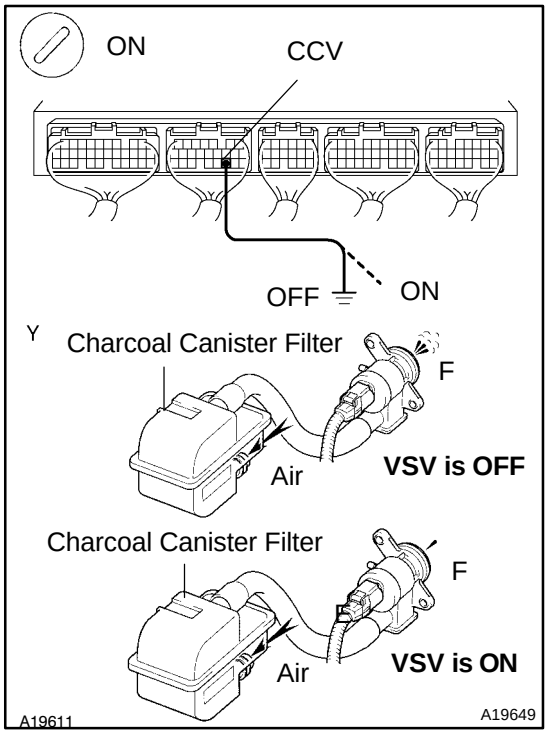

PREPARATION:

(a) Remove the grove compartment (See page SF–48).

(b) Turn the ignition switch ON.

CHECK:

Check the VSV function.

(1) Connect between terminal CCV of the ECM connector and body ground (ON).

(2) Disconnect between terminal CCV of the ECM connector and body ground (OFF).

OK:

VSV is ON:
Air does not flow from charcoal canister filter port to port F.
VSV is OFF:
Air from charcoal canister filter port flows out through port F.

NG	Replace charcoal canister filter.

OK

18	Check operation of VSV for CCV (See page SF–41).

OK	Go to step 19.

NG

Replace VSV and charcoal canister, and then check leakage for between charcoal canister and VSV for CCV.

19	Check for open and short in harness and connector between EFI main relay (Marking: EFI) and VSV for CCV, and VSV for CCV and ECM (See page IN–27).

NG → Repair or replace harness or connector.

OK ↓

Check and replace ECM (See page IN–27).

20	Check the fuel tank over fill check valve (See page EC–8).

NG → Replace fuel tank over fill check valve or fuel tank.

OK ↓

Check and replace charcoal canister (See page EC–8).

DTC	P0451	Evaporative Emission Control System Pressure Sensor/Switch Range/Performance

DTC	P0452	Evaporative Emission Control System Pressure Sensor/Switch Low Input

DTC	P0453	Evaporative Emission Control System Pressure Sensor/Switch High Input

CIRCUIT DESCRIPTION

The vapor pressure sensor and the vsv for the canister closed valve (CCV) are used to detect abnormalities in the evaporative emission control system.

The ECM decides whether there is an abnormality in the evaporative emission control system, based on the vapor pressure sensor signal.

DTC P0451, P0452 or P0453 is recorded by the ECM when the vapor pressure sensor malfunction.

Fig. 1

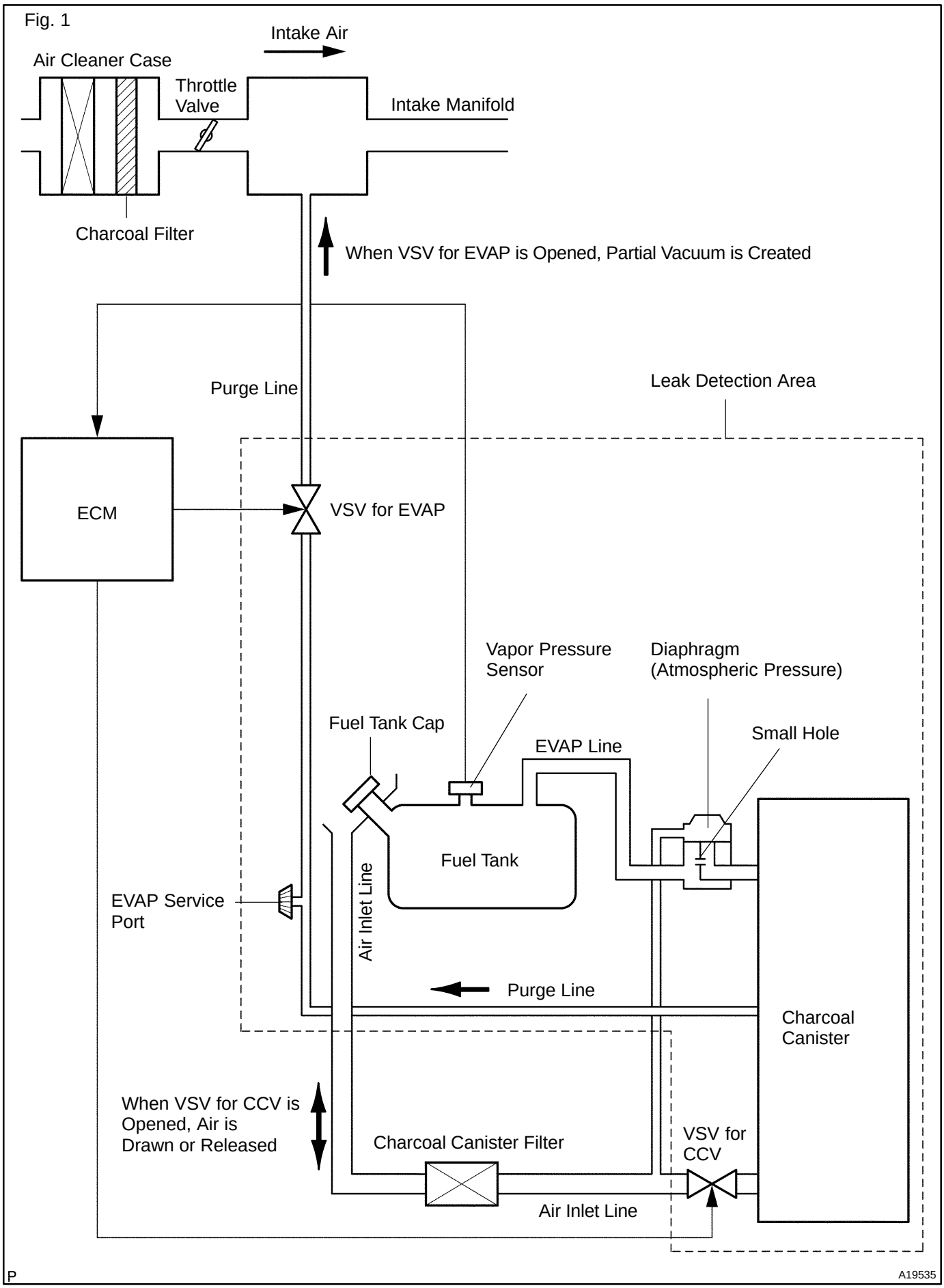
Intake Air
Air Cleaner Case
Throttle Valve
Intake Manifold
Charcoal Filter
When VSV for EVAP is Opened, Partial Vacuum is Created
Purge Line
Leak Detection Area
ECM
VSV for EVAP
Vapor Pressure Sensor
Diaphragm (Atmospheric Pressure)
Fuel Tank Cap
EVAP Line
Small Hole
Fuel Tank
EVAP Service Port
Air Inlet Line
Purge Line
Charcoal Canister
When VSV for CCV is Opened, Air is Drawn or Released
Charcoal Canister Filter
VSV for CCV
Air Inlet Line
P
A19535

DTC No.	DTC Detection Condition	Trouble Area
P0451	Vapor pressure sensor output extremely changes under conditions of (a), (b) and (c): (2 trip detection logic) (a) Vehicle speed: 0 km/h (0 mph) (b) Engine speed: Idling (c) VSV for vapor pressure sensor is ON	▲Open or short in vapor pressure sensor circuit ▲Vapor pressure sensor ▲ECM
P0452 P0453	10 seconds or less after engine starting condition (a) or (b) continues for 7 seconds or more: (2 trip detection logic) (a) Vapor pressure sensor value > –3.5 kPa (–26 mmHg, –1.0 in.Hg) (b) Vapor pressure sensor value ＞ 2.0 kPa (15 mmHg, 0.6 in.Hg)	▲Open or short in vapor pressure sensor circuit ▲Vapor pressure sensor ▲ECM
	10 seconds or more after engine starting condition (a) or (b) continues for 7 seconds or more: (2 trip detection logic) (a) Vapor pressure sensor value < –4.0 kPa (–30 mmHg, –1.2 in.Hg) (b) Vapor pressure sensor value ＜ 2.0 kPa (15 mmHg, 0.6 in.Hg)	

WIRING DIAGRAM

Refer to DTC P0441 on page DI–102.

INSPECTION PROCEDURE

HINT:

- ▲ If different DTCs that are related to different systems are output simultaneously while terminal E2 is used as a ground terminal, terminal E2 may be open.
- ▲ If DTC P0441, P0452, P0453 is output after DTC P0441, P0442, P0446, P0456 first troubleshoot DTC P0451, P0452 or P0453. If no other malfunction is detected, troubleshoot DTC next P0451, P0452, P0453.
- ▲ Read freeze frame data using hand–held tester or OBD II scan tool. Because freeze frame records the engine conditions when the malfunction is detected. When troubleshooting it is useful for determining whether the vehicle was running or stopped, the engine was warmed up or not, the air–fuel ratio was lean or rich, etc. at the time of the malfunction.
- ▲ When the ENGINE RUN TIME in the freeze frame data is less than 200 seconds, carefully check the vapor pressure sensor.

1	**Check voltage between terminals VC and E2 of ECM connector (See page DI–102, step 21).**

NG → **Check and replace ECM (See page IN–27).**

OK

2	Check voltage between terminals PTNK and E2 of ECM connectors (See page DI–102, step 22).

OK → Check and replace ECM (See page IN–27).

NG

3	Check for open and short in harness and connector between vapor pressure sensor and ECM (See page IN–27).

NG → Repair or replace harness or connector.

OK

Replace vapor pressure sensor.

DI3CQ–10

DTC	P0500	Vehicle Speed Sensor ”A”

CIRCUIT DESCRIPTION

The vehicle speed sensor outputs a 4–pulse signal for every revolution of the rotor shaft, which is rotated by the transmission output shaft via the driven gear. After this signal is converted into a more precise rectangular waveform by the waveform shaping circuit inside the combination meter, it is then transmitted to the ECM. The ECM determines the vehicle speed based on the frequency of these pulse signals.

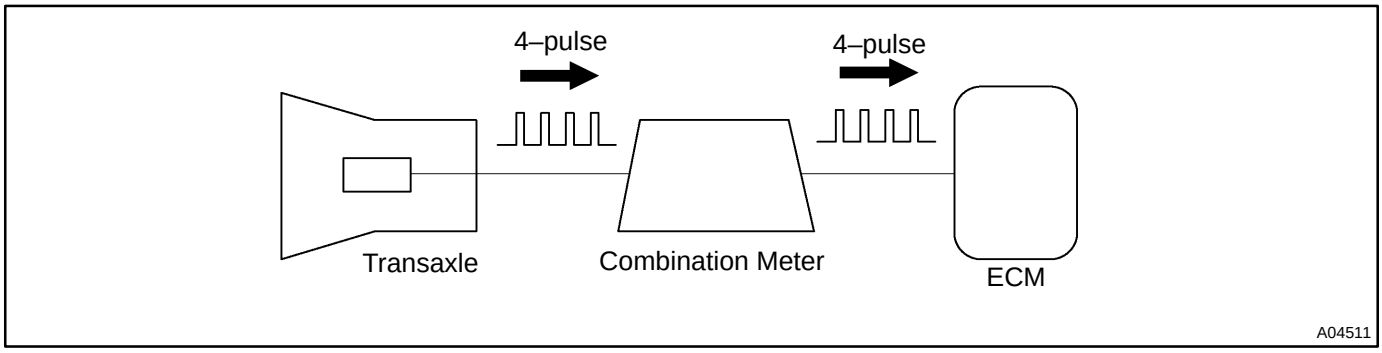

DTC No.	DTC Detection Condition	Trouble Area
P0500	No vehicle speed sensor signal to ECM under following conditions (a) and (b): (2 trip detection logic) (a) Park/neutral position switch is OFF (b) Vehicle is being driven	▲Combination meter ▲Open or short in vehicle speed sensor circuit ▲Vehicle speed sensor ▲ECM

WIRING DIAGRAM

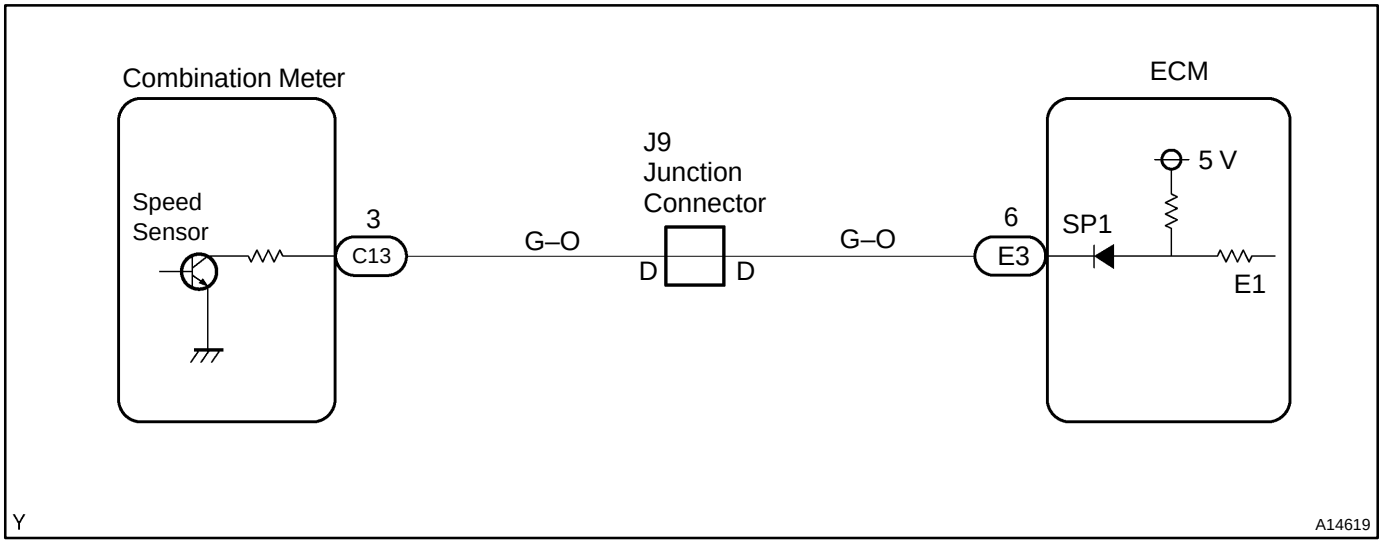

INSPECTION PROCEDURE

HINT:

Read freeze frame data using hand–held tester or OBD II scan tool. Because freeze frame records the engine conditions when the malfunction is detected. When troubleshooting, it is useful for determining whether the vehicle was running or stopped, the engine was warmed up or not, the air–fuel ratio was lean or rich, etc. at the time of the malfunction.

1	**Check operation of speedometer.**

CHECK:

Drive the vehicle and check if the operation of the speedometer in the combination meter is normal.

HINT:

The vehicle speed is operating normally if the speedometer display is normal.

NG → **Check speedometer circuit (See page BE–48).**

OK

2	**Check voltage between terminal SP1 of ECM connector and body ground.**

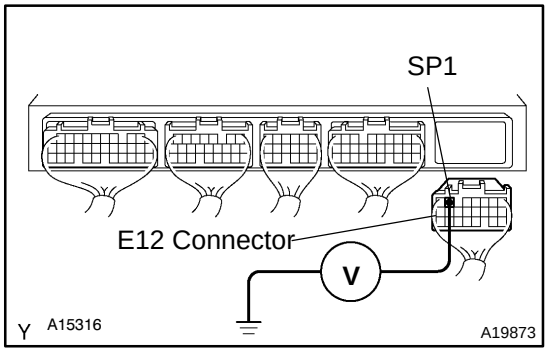

PREPARATION:

(a) Remove the glove compartment (See page SF–49).
(b) Disconnect the E3 connector from the ECM.
(c) Shift the shift lever to the neutral.
(d) Jack up a rear wheel on one side.
(e) Turn the ignition switch ON.

CHECK:

Measure the voltage between terminal SP1 of the ECM connector and body ground when the wheel is turned slowly.

OK:

Voltage is generated intermittently.

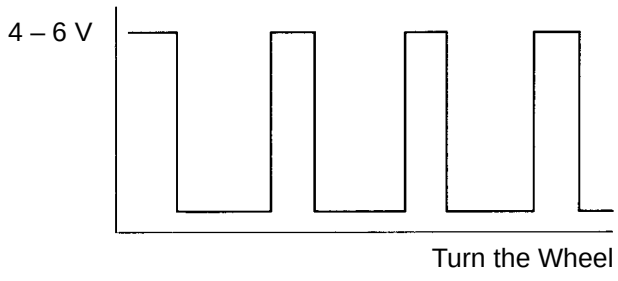

NG → **Check and repair harness and connector between combination meter and ECM.**

OK

Check and replace ECM (See page IN–27).

DIA9N–01

DTC	P0560	System Voltage

CIRCUIT DESCRIPTION

Battery positive voltage is supplied to terminal BATT of the ECM, even when the ignition switch is OFF for use by the DTC, memory and air–fuel ratio adaptive control value memory, etc.

DTC No.	DTC Detection Condition	Trouble Area
P0560	Open in back–up power source circuit	▲Open in back–up power source circuit ▲ECM

HINT:

If DTC P0560 appears, the ECM does not store another DTC.

WIRING DIAGRAM

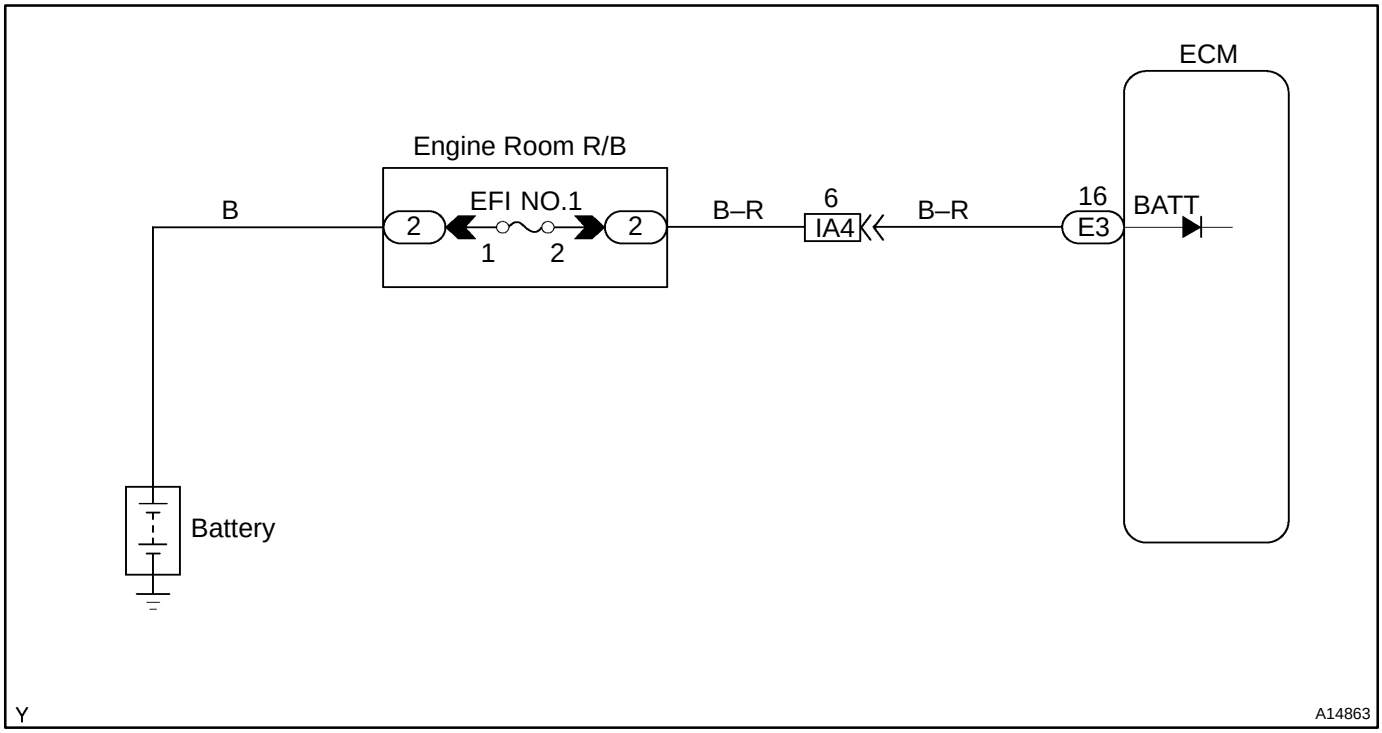

INSPECTION PROCEDURE

HINT:

Read freeze frame data using the hand–held tester or OBD II scan tool, as freeze frame records the engine conditions when a malfunction is detected. When troubleshooting it is useful for determining whether the vehicle was running or stopped, the engine was warmed up or not, the air–fuel ratio was lean or rich, etc. at the time of the malfunction.

1	**Check voltage between terminal BATT of ECM connector and body ground.**

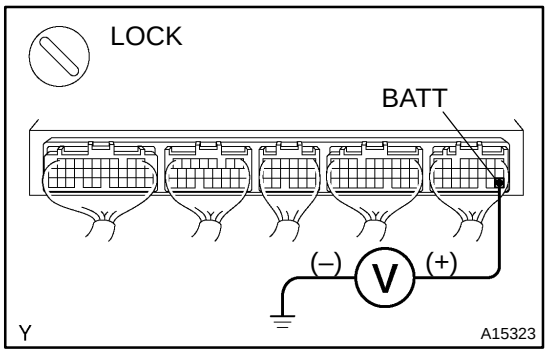

PREPARATION:
Remove the glove compartment (See page SF–49).
CHECK:
Measure the voltage between terminal BATT of the ECM connector and body ground.
OK:

Voltage: 9 – 14 V

OK	**Check and replace ECM (See page IN–27).**

NG

2	**Check EFI No.1 fuse.**

PREPARATION:
Remove the EFI No.1 fuse from the engine room R/B.
CHECK:
Check the continuity of the EFI No.1 fuse.
OK:

Continuity

NG	**Check for short in all harness and components connected to EFI No.1 fuse.**

OK

Check and repair harness or connector between battery and EFI No.1 fuse, and EFI No.1 fuse and ECM.

DIA9O–01

DTC	P0571	Brake Switch ”A” Circuit

CIRCUIT DESCRIPTION

This signal is used to detect when the brakes have been applied. The STP signal voltage is the same as the voltage supplied to the stop lights.The STP signal is used mainly to control the fuel cutoff engine speed. (The fuel cutoff engine speed is reduced slightly when the vehicle is braking.)

DTC No.	DTC Detection Condition	Trouble Area
P0571	Stop light switch does not turn off even once the vehicle is driven (with cruise control function) (2 trip detection logic)	▲Short in stop light switch signal circuit ▲Stop light switch ▲ECM

WIRING DIAGRAM

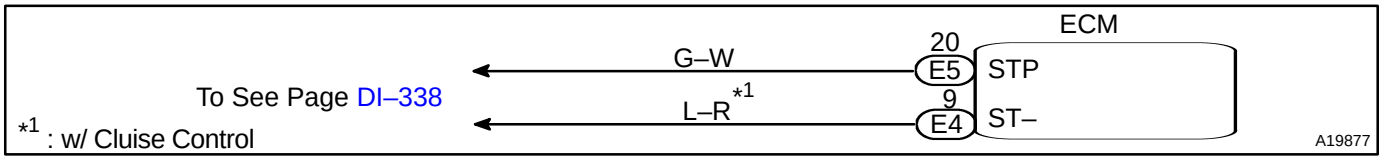

INSPECTION PROCEDURE

HINT:

Read freeze frame data using hand–held tester or OBD II scan tool, as freeze frame data records the engine conditions when a malfunction is detected. When troubleshooting, it is useful for determining whether the vehicle was running or stopped, the engine was warmed up or not, the air–fuel ratio was lean or rich, etc. at the time of the malfunction.

1	**Check operation of stop light.**

PREPARATION:

Check if the stop lights come on and go off normally when the brake pedal is depressed and released.

NG → **Check stop light circuit (See page BE–39).**

OK ↓

2	**Check for harness and connector between ECM and stop light switch (See page IN–27).**

NG → **Repair or replace harness or connector.**

OK ↓

Check and replace ECM (See page IN–27).

DIA9P–01

DTC	P0604	Internal Control Module Random Access Memory (RAM) Error

DTC	P0606	ECM/PCM Processor

DTC	P0607	Control Module Performance

DTC	P0657	Actuator Supply Voltage Circuit / Open

CIRCUIT DESCRIPTION

Refer to DTC P1129 on page DI–158.

DTC No.	DTC Detecting Condition	Trouble Area
P0604 P0606 P0607 P0657	ECM malfunction	ECM

INSPECTION PROCEDURE

HINT:

Read freeze frame data using hand–held tester or OBD II scan tool. Because freeze frame records the engine conditions when the malfunction is detected. When troubleshooting it is useful for determining whether the vehicle was running or stopped, the engine was warmed up or not, the air–fuel ratio was lean or rich, etc. at the time of the malfunction.

Replace ECM.

DIA9Q–01

DTC	P0617	Starter Relay Circuit High

CIRCUIT DESCRIPTION

While the engine is being cranked, the battery positive voltage is applied to terminal STA of the ECM.

DTC No.	DTC Detection Condition	Trouble Area
P0617	When all conditions (a), (b) and (c) are satisfied with battery (+B) voltage 10.5 V or more (a) Vehicle speed < 20 km/h (6 mph) (b) Engine revolution < 1,000 rpm (c) STA signal ON	▲Park/neutral position (PNP) switch (A/T) ▲Clutch start switch (M/T) ▲ECM

WIRING DIAGRAM

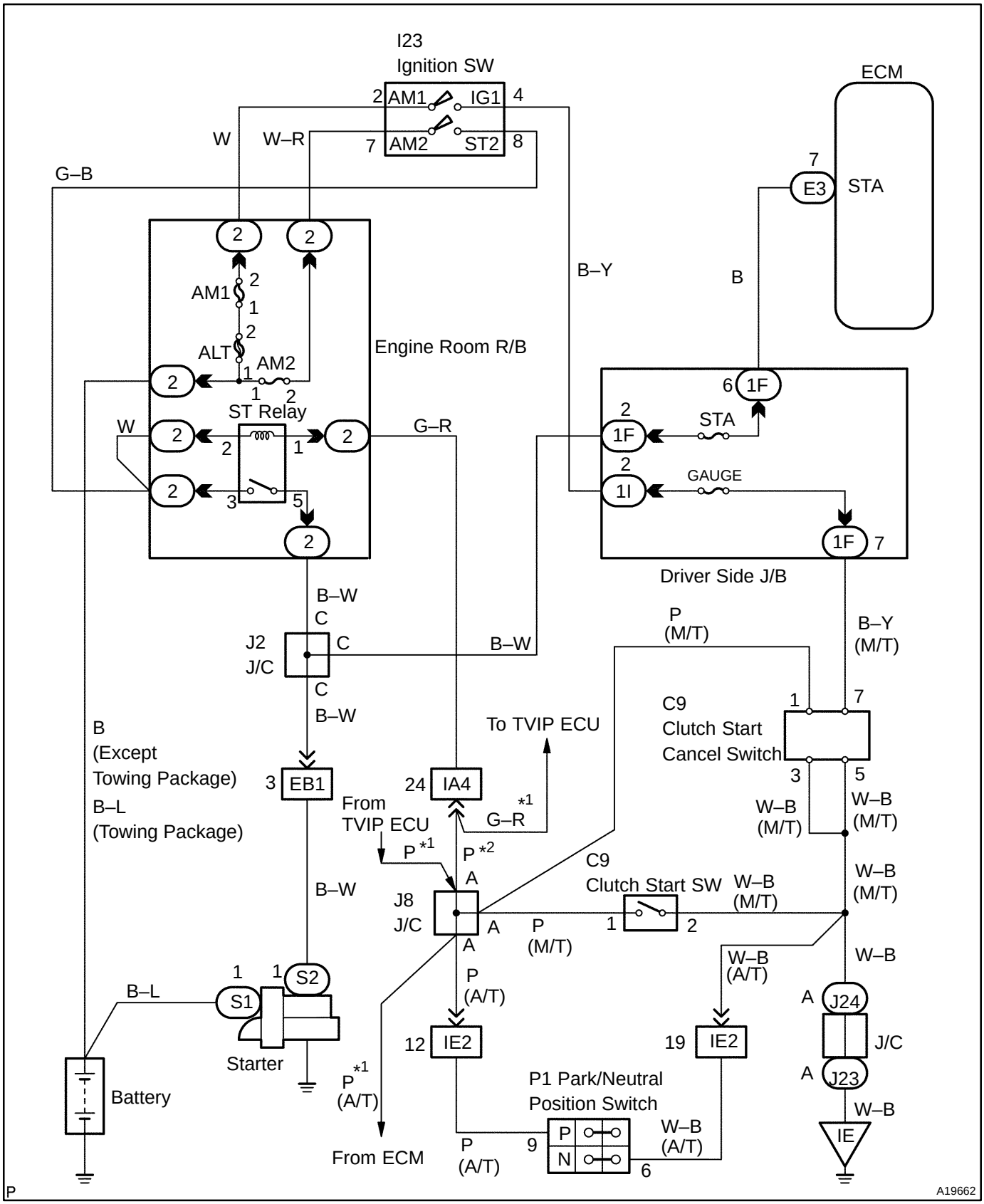

INSPECTION PROCEDURE

HINT:

Read freeze frame data using the hand–held tester or OBD II scan tool, as freeze frame data records the engine conditions when a malfunction is detected. When troubleshooting, it is useful for determining whether the vehicle was running or stopped, the engine was warmed up or not, the air–fuel ratio was lean or rich, etc. at the time of the malfunction.

Hand–held tester:

1	**Connect hand–held tester, and check STA signal.**

PREPARATION:

(a) Connect the hand–held tester to the DLC3.

(b) Turn the ignition switch ON and push the hand–held tester main switch ON.

CHECK:

Read the STA signal on the hand–held tester while the starter operates.

OK:

Ignition Switch Position	ON	START
STA Signal	OFF	ON

OK → **Check and replace ECM (See page IN–27)**

NG

2	**Check starter relay (Marking ST) (See page ST–18).**

NG → **Replace starter relay.**

OK

3	**Check ignition switch (See page BE–15).**

NG → **Replace ignition switch.**

OK

4	**Check park/neutral position (PNP) switch (A/T) (See page DI–408) or clutch start switch (M/T) (See page CL–2).**

NG → **Replace park/neutral position switch or clutch start switch.**

OK

5	**Check for open in harness and connector between ECM and park/neutral position (PNP) switch (A/T) (See page DI–408) or clutch start switch (M/T) (See page IN–27).**

NG → **Repair or replace harness or connector.**

OK

Check and replace ECM (See page IN–27).

OBD II scan tool (excluding hand–held tester):

1	**Check voltage between terminal STA of ECM connector and body ground.**

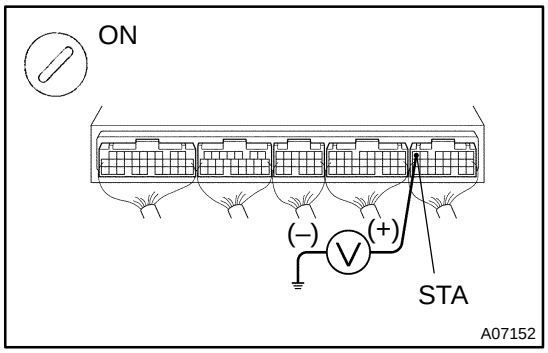

PREPARATION:
Remove the glove compartment (See page SF–49).
CHECK:
Measure the voltage between terminal STA of the ECM connector and the body ground, during the engine cranking (ignition switch START position) and does not engine cranking (ignition switch position ON).
OK:

Voltage:
6 V or more (ignition switch START position)
0 V (ignition switch ON position)

OK → **Check and replace ECM (See page IN–27)**

NG

2	Check starter relay (Marking ST) (See page ST–18).

NG → Replace starter relay.

OK

3	Check ignition switch (See page BE–15).

NG → Replace ignition switch.

OK

4	Check park/neutral position (PNP) switch (A/T) (See page DI–408) or clutch start switch (M/T) (See page CL–2).

NG → Replace park/neutral position switch or clutch start switch.

OK

5	Check for open in harness and connector between ECM and park/neutral position (PNP) switch (A/T) (See page DI–408) or clutch start switch (M/T) (See page IN–27).

NG → Repair or replace harness or connector.

OK

Check and replace ECM (See page IN–27).

DIA9R–01

DTC	P0705	Transmission Range Sensor Malfunction (PRNDL Input)

DTC	P0850	Park/Neutral Switch Input Circuit

CIRCUIT DESCRIPTION

The park/neutral position switch go on when the shift lever is in the N or P shift position. When it goes on terminal NSW of the ECM is grounded to body ground via the starter relay, thus the terminal NSW voltage becomes 0V. When the shift lever is in the D, 2, L or R position, the park/neutral position switch goes off, so the voltage of ECM. Terminal NSW becomes battery voltage, the voltage of the ECM internal power source. If the shift lever is moved from the N position to the D position, this signal is used for air–fuel ratio correction and for idle speed control (estimated control), etc.

DTC No.	DTC Detection Condition	Trouble Area
P0705 P0850	2 or more switches are ON simultaneously for P, R, N, D, 2 and L position (2 trip detection logic)	▲Open in park/neutral position switch circuit ▲Park/neutral position switch ▲ECM
	When driving under conditions (a) and (b) for 30 sec. or more park/neutral position switch is ON (N position): (2 trip detection logic) (a) Vehicle speed: 70 km/h (44 mph) or more (b) Engine speed: 1,500 – 2,500 rpm	

HINT:
After confirming DTC P0705 and P0850 use the hand–held tester to confirm the PNP switch signal from the CURRENT DATA.

WIRING DIAGRAM

Refer to DTC P0705, P0850 on page DI–408.

INSPECTION PROCEDURE

HINT:
Read freeze frame data using the hand–held tester or OBD II scan tool, as freeze frame data records the engine conditions when a malfunction is detected. When troubleshooting it is useful for determining whether the vehicle was running or stopped, the engine was warmed up or not, the air–fuel ratio was lean or rich, etc. at the time of the malfunction.

DIA9S–01

DTC	P0724	Brake Switch ”B” Circuit High

CIRCUIT DESCRIPTION

This signal is used to detect when the brakes have been applied. The STP signal voltage is the same as the voltage supplied to the stop lights. The STP signal is used mainly to control the fuel cut–off engine speed. (The fuel cut–off engine speed is reduced slightly when the vehicle is braking.)

DTC No.	DTC Detection Condition	Trouble Area
P0724	Stop light switch does not turn off even once the vehicle is driven (2 trip detection logic)	▲Short in stop light switch signal circuit ▲Stop light switch ▲ECM

WIRING DIAGRAM

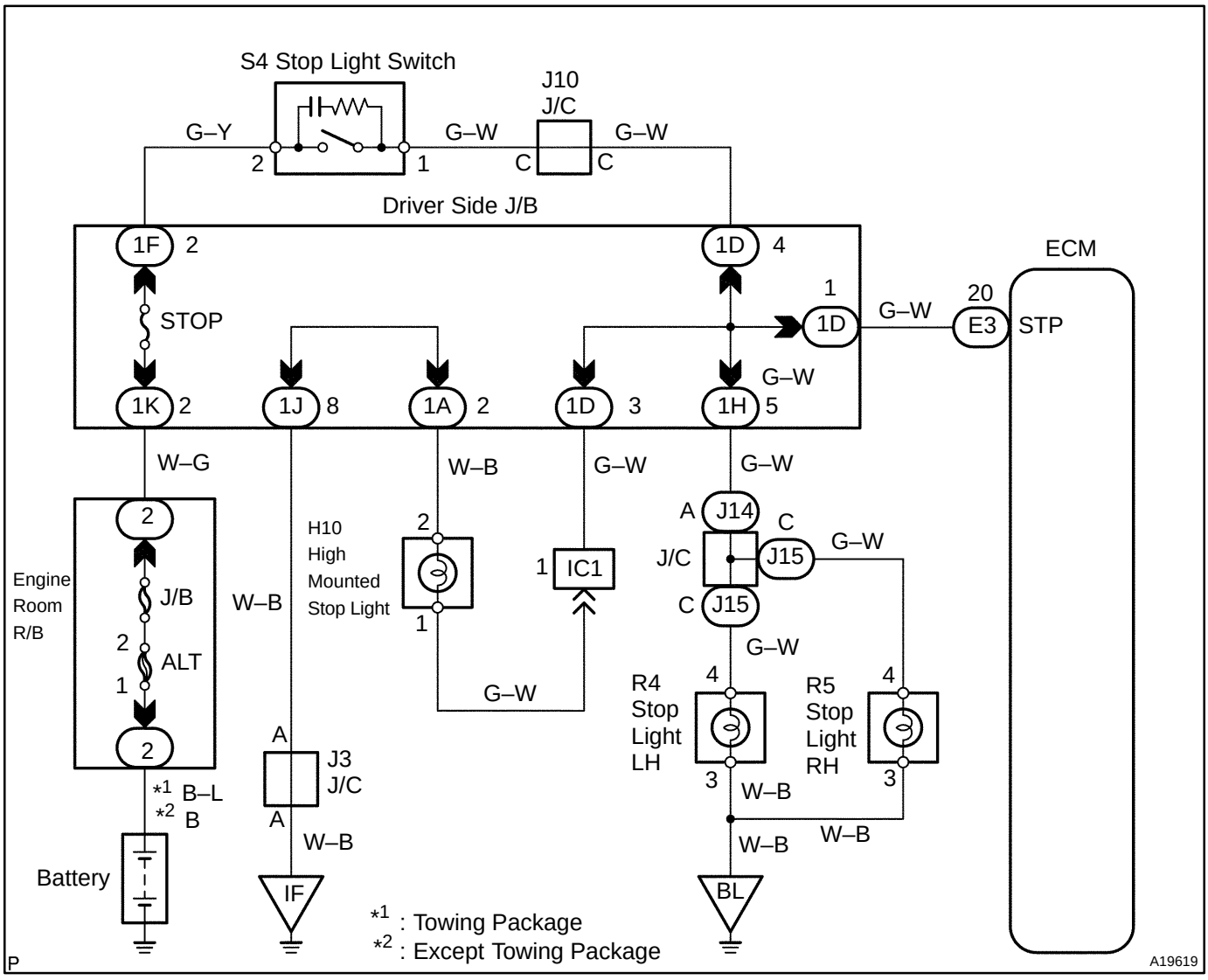

INSPECTION PROCEDURE

HINT:

Read freeze frame data using the hand–held tester or OBD II scan tool, as freeze frame data records the engine conditions when a malfunction is detected. When troubleshooting, it is useful for determining whether the vehicle was running or stopped, the engine was warmed up or not, the air–fuel ratio was lean or rich, etc. at the time of the malfunction.

1	**Check operation of stop light.**

CHECK:

Check if the stop lights go on and off normally when the brake pedal is operated and released.

NG → **Check and repair stop light circuit (See page BE–39).**

OK

2	Check STP signal.

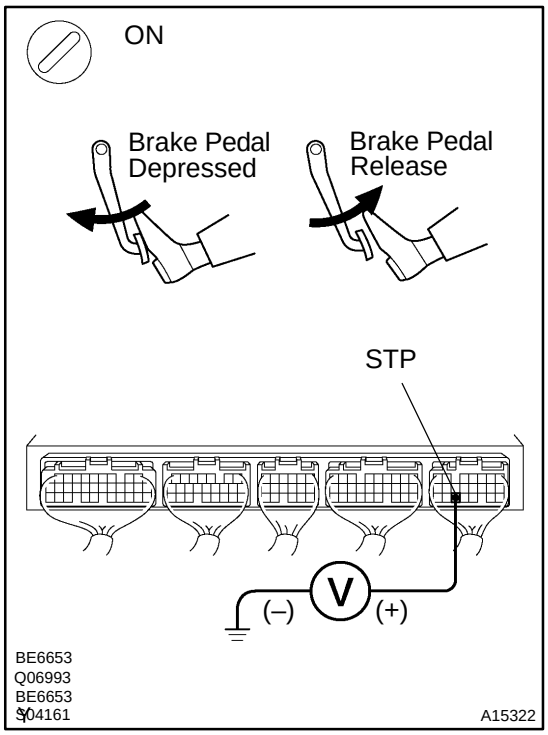

When using hand–held tester:

PREPARATION:

(a) Connect the hand–held tester to the DLC3.

(b) Turn the ignition switch ON and push the hand–held tester main switch ON.

CHECK:

Read the STP signal on the hand–held tester.

OK:

Brake Pedal	STP Signal
Depressed	ON
Release	OFF

When not using Hand–held tester:

PREPARATION:

(a) Remove the glove compartment (See page SF–49).

(b) Turn the ignition switch ON.

CHECK:

Check the voltage between terminal STP of the ECM connector and body ground.

OK:

Brake Pedal	Voltage
Depressed	7.5 – 14 V
Release	Below 1.5 V

OK → **Check for intermittent problems (See page DI–24).**

NG

3	Check harness and connector between stop light switch and ECM (See page DI–21).

NG → **Repair or replace harness or connector.**

OK

Check and replace ECM (See page IN–27).

DIA9T–01

DTC	P1126	Magnetic Clutch Circuit

CIRCUIT DESCRIPTION

Magnetic clutch is mounted between the throttle motor and the valve, and it connects the throttle motor with the throttle valve.
Therefore, the throttle motor opens and closes the throttle valve through the magnetic clutch.
If the electric throttle control system has a malfunction, the magnetic clutch separates the throttle motor from the throttle valve in order not to operate the throttle valve by the throttle motor.
If this DTC is stored, the ECM shuts down the power for the throttle motor and the magnetic clutch, and the throttle valve is fully closed by the return spring.
However, the opening angle of the throttle valve can be controlled by the accelerator pedal through the throttle cable.

DTC No.	DTC Detecting Condition	Trouble Area
P1126	Condition (a) continues for 0.8 seconds: (a) Magnetic clutch current > 1.4 A or < 0.4 A	▲Open or short in magnetic clutch circuit ▲Magnetic clutch ▲ECM
	Condition (a) continues for 1.5 seconds: (a) Magnetic clutch current > 1.0 A or < 0.8 A	

WIRING DIAGRAM

Refer to DTC P2102 on page DI–151.

INSPECTION PROCEDURE

HINT:
Read freeze frame data using hand–held tester or OBD II scan tool. Because freeze frame records the engine conditions when the malfunction is detected. When troubleshooting it is useful for determining whether the vehicle was running or stopped, the engine was warmed up or not, the air–fuel ratio was lean or rich, etc. at the time of the malfunction.

1	**Check magnetic clutch circuit.**

When using Hand–held tester:

PREPARATION:

(a) Connect the hand–held tester to the DLC3.

(b) Turn the ignition switch ON and push the hand–held tester main switch ON.

CHECK:

Read the magnetic clutch current value on the hand–held tester.

OK:

Current: 0.8 – 1.0 A

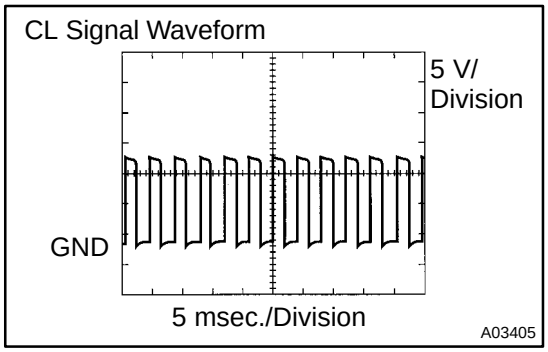

When not using hand–held tester:

PREPARATION:

(a) Connect the oscilloscope between terminals CL+ and CL– of the ECM connector.

(b) Start the engine.

CHECK:

Check the waveform between terminals CL+ and CL– of the ECM connector when the engine is idling.

OK:

The correct waveform is as shown.

NG → **Go to step 4.**

OK

2	**Check magnetic clutch (See page SF–27).**

NG → **Replace throttle control motor with magnetic clutch (See page SF–29).**

OK

3	**Check for open and short in harness and connector between magnetic clutch and ECM (See page IN–27).**

NG → **Repair or replace.**

OK

4	**Check operation of magnetic clutch.**

CHECK:

(a) Clear the DTC.

(b) Perform the following steps and check the DTC.

(1) Turn the ignition switch ON.

(2) Start the engine.

(3) Turn the ignition switch OFF and wait 3 seconds.

(4) Turn the ignition switch ON.

OK:

DTC P1126 is not stored.

NG → **Replace throttle control motor with magnetic clutch (See page SF–29).**

OK

Check and replace ECM (See page IN–27).

DIA9U–01

DTC	P2102	Throttle Actuator Control Motor Circuit Low

DTC	P2103	Throttle Actuator Control Motor Circuit High

CIRCUIT DESCRIPTION

Throttle motor is operated by the ECM and it opens and closes the throttle valve.
The opening angle of the throttle valve is detected by the throttle position sensor which is mounted on the throttle body and it provides feedback to the ECM to control the throttle motor in order to the throttle valve opening angle properly in response to driving condition.
If this DTC is stored, the ECM shuts down the power for the throttle motor and the magnetic clutch, and the throttle valve is fully closed by the return spring.
However, the opening angle of the throttle valve can be controlled by the accelerator pedal through the throttle cable.

DTC No.	DTC Detecting Condition	Trouble Area
P2102 P2103	Conditions (a) and (b) continue for 0.5 seconds: (a) Throttle control motor output duty < 80 % (b) Throttle control motor current < 0.5 A	▲Open or short in throttle control motor circuit ▲Throttle control motor ▲ECM
	Throttle control motor current < 16 A	
	Condition (a) continues for 0.6 seconds: (a) Throttle control motor current < 7 A	

WIRING DIAGRAM

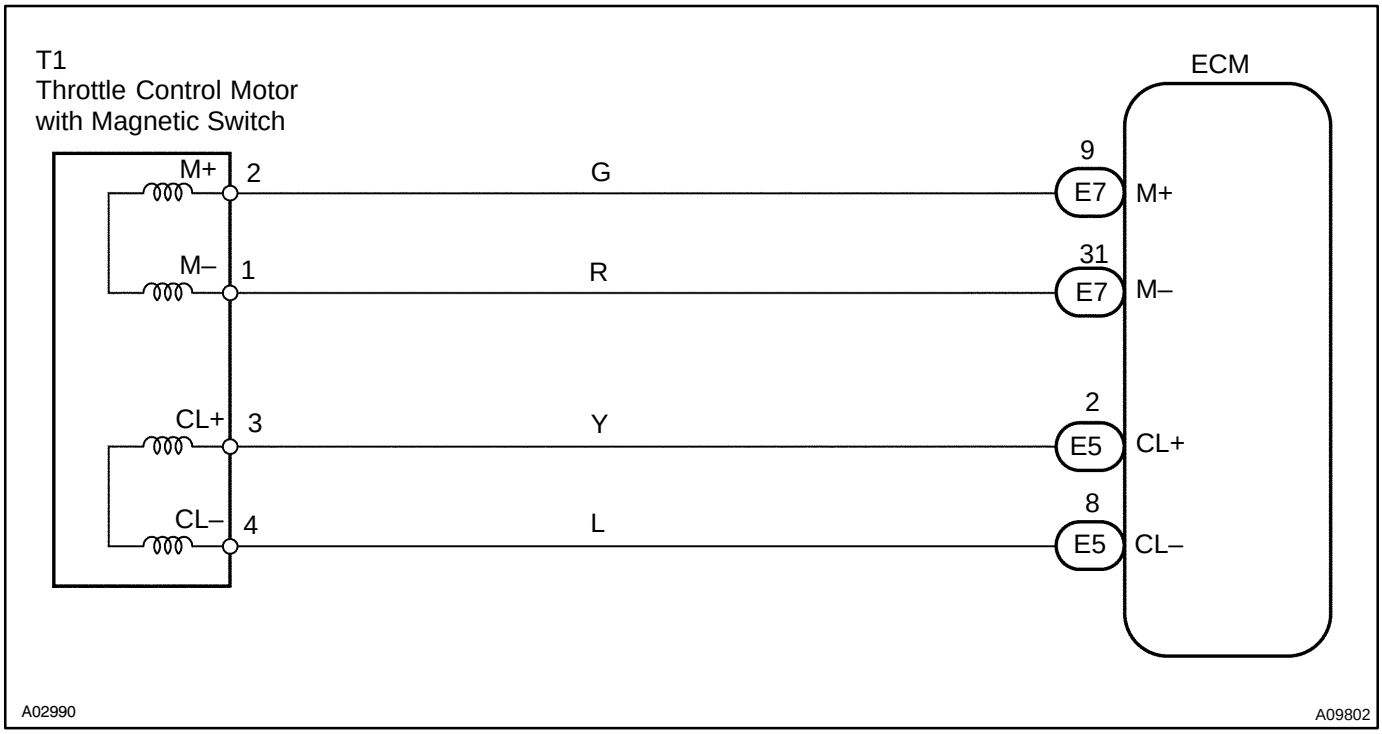

INSPECTION PROCEDURE

HINT:

Read freeze frame data using hand–held tester or OBD II scan tool. Because freeze frame records the engine conditions when the malfunction is detected. When troubleshooting it is useful for determining whether the vehicle was running or stopped, the engine was warmed up or not, the air–fuel ratio was lean or rich, etc. at the time of the malfunction.

1	**Check throttle control motor circuit.**

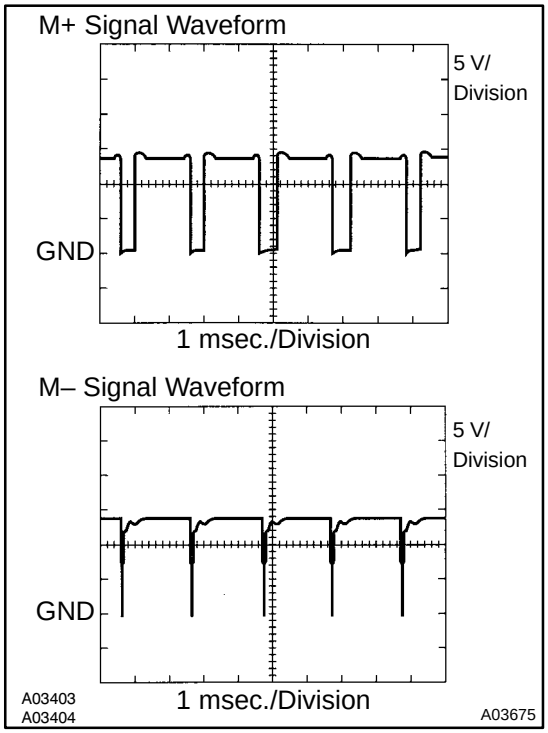

When not using hand–held tester:

PREPARATION:

(a) Connect the oscilloscope between terminals M+ or M– and E1 of the ECM connector.

(b) Start the engine.

CHECK:

Check the waveform between terminals M+ or M– and E1 of the ECM when the engine is idling.

OK:

The correct waveforms are as shown.

HINT:

The waveform frequency varies depending on the throttle opening.

OK → **Check and replace ECM (See page IN–27).**

NG

2	**Check throttle control motor (See page SF–27).**

NG → **Replace throttle control motor (See page SF–29).**

OK

3	**Check for open and short in harness and connector between throttle control motor and ECM (See page IN–27).**

NG → **Repair or replace.**

OK

Check and replace ECM (See page IN–27).

DTC	P2111	Throttle Actuator Control System –Stuck Open

DTC	P2112	Throttle Actuator Control System –Stuck Closed

CIRCUIT DESCRIPTION

Throttle motor is operated by the ECM and it opens and closes the throttle valve. The opening angle of the throttle valve is detected by the throttle position sensor which is mounted on the throttle body and it provides feedback to the ECM to control the throttle motor in order the throttle valve opening angle properly in response to driving condition. If this DTC is stored, the ECM shuts down the power for the throttle motor and the magnetic clutch, and the throttle valve is fully closed by the return spring. However, the opening angle of the throttle valve can be controlled by the accelerator pedal through the throttle cable.

DTC No.	DTC Detecting Condition	Trouble Area
P2111 P2112	Lock throttle control motor during control throttle control motor	▲Throttle control motor ▲Throttle body

INSPECTION PROCEDURE

HINT:

Read freeze frame data using hand–held tester or OBD II scan tool. Because freeze frame records the engine conditions when the malfunction is detected. When troubleshooting it is useful for determining whether the vehicle was running or stopped, the engine was warmed up or not, the air–fuel ratio was lean or rich, etc. at the time of the malfunction.

1	**Check throttle control motor (See page DI–151).**

NG → **Replace throttle control motor (See page SF–29).**

OK

2	**Visually check throttle valve.**

PREPARATION:

Remove the intake air connector.

CHECK:

Check whether or not a foreign body is caught between the throttle valve and the housing.

NG → **Remove a foreign body and clean throttle body.**

OK

Replace throttle body.

DIA9W–01

DTC	P2118	Throttle Actuator Control Motor Current Range/Performance

CIRCUIT DESCRIPTION

Battery positive voltage is supplied to terminal +BM of the ECM even once when the ignition switch is OFF for the ETCS control system.
If this DTC is stored, the ECM shuts down the power for the ETCS motor and the magnetic clutch, and the ETCS valve is fully closed by the return spring.
However, the opening angle of the ETCS valve can be controlled by the accelerator pedal through the ETCS cable.

DTC No.	DTC Detecting Condition	Trouble Area
P2118	Open in ETCS power source circuit	▲Open in ETCS power source circuit ▲ECM

WIRING DIAGRAM

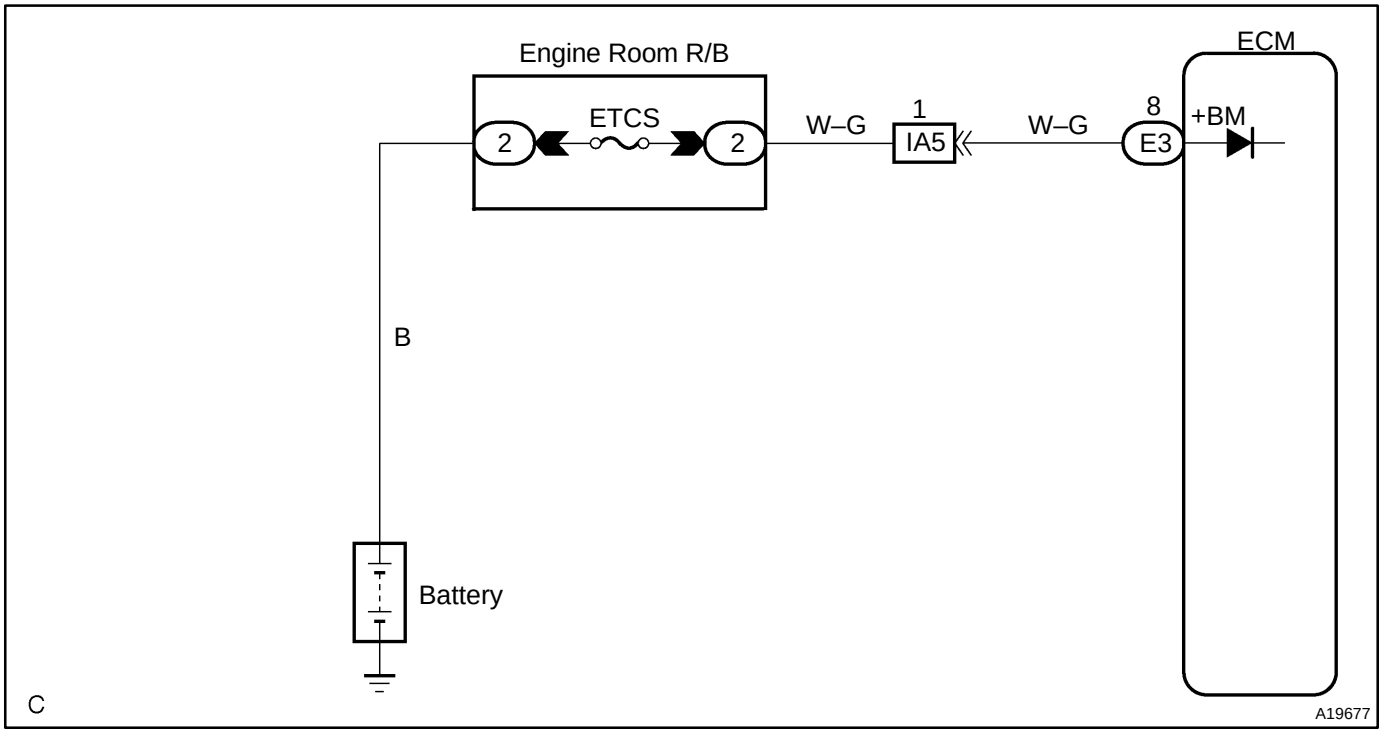

INSPECTION PROCEDURE

HINT:
Read freeze frame data using hand–held tester or OBD II scan tool. Because freeze frame records the engine conditions when the malfunction is detected. When troubleshooting it is useful for determining whether the vehicle was running or stopped, the engine was warmed up or not, the air–fuel ratio was lean or rich, etc. at the time of the malfunction.

1	**Check ETCS fuse.**

PREPARATION:
Remove the ETCS fuse from the engine room R/B.
CHECK:
Check the continuity of the ETCS fuse.
OK:

Continuity

NG → **Check for short in all harness and components connected to ETCS fuse.**

OK

2	**Check voltage between terminal +BM of ECM connector and body ground.**

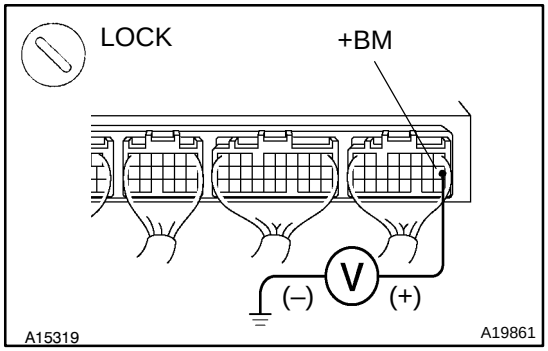

PREPARATION:
Remove the glove compartment (See page SF–49).
CHECK:
Measure the voltage between terminal +BM of the ECM connector and body ground.
OK:

Voltage: 9 – 14 V

OK → **Check and replace ECM (See page IN–27).**

NG

Check and repair harness or connector between battery and ETCS fuse, and ETCS fuse and ECM (See page IN–27).

DIA9X–01

DTC	P2119	Throttle Actuator Control Throttle Body Range Performance

CIRCUIT DESCRIPTION

Electric Throttle Control System (ETCS) is composed of the throttle motor to operate the throttle valve, the electromagnetic clutch to connect the throttle motor with the throttle valve, the throttle position sensor to detect the opening angle of the throttle valve, the accelerator pedal position sensor to detect the accelerator pedal position, the ECM to control the ETCS and the one valve type throttle body.
The ECM controls the throttle motor to make the throttle valve opening angle properly in response driving condition.
The throttle position sensor which is mounted on the throttle body detects the opening angle of the throttle valve, and it provides feedback to the ECM to control the throttle motor.
If the ETCS has a malfunction, the ECM shuts down the power for the throttle motor and the magnetic clutch, and the throttle valve is fully closed by the return spring.
However, the opening angle of the throttle valve can be controlled by the accelerator pedal through the throttle cable.

DTC No.	DTC Detecting Condition	Trouble Area
P2119	Throttle opening angle continues to vary great from target throttle opening angle	▲Electric throttle control system ▲ECM

WIRING DIAGRAM

Refer to DTC P2102 on page DI–151.

INSPECTION PROCEDURE

HINT:
Read freeze frame data using hand–held tester or OBD II scan tool. Because freeze frame records the engine conditions when the malfunction is detected. When troubleshooting it is useful for determining whether the vehicle was running or stopped, the engine was warmed up or not, the air–fuel ratio was lean or rich, etc. at the time of the malfunction.

Replace ECM, and clear DTC. If DTC P2119 is memorized again, and then replace throttle body.

DTC	P2120	Throttle/Pedal Position Sensor/Switch ”D” Circuit

DTC	P2122	Throttle/Pedal Position Sensor/Switch ”D” Circuit Low Input

DTC	P2123	Throttle/Pedal Position Sensor/Switch ”D” Circuit High Input

DTC	P2125	Throttle/Pedal Position Sensor/Switch ”E” Circuit

DTC	P2127	Throttle/Pedal Position Sensor/Switch ”E” Circuit Low Input

DTC	P2128	Throttle/Pedal Position Sensor/Switch ”E” Circuit High Input

DTC	P2138	Throttle/Pedal Position Sensor/Switch ”D”/”E” Voltage Correlation

CIRCUIT DESCRIPTION

Accelerator pedal position sensor is mounted on the throttle body and it has the 2 sensors to detects the accelerator position and a malfunction of the accelerator position's own.

The accelerator pedal position sensor is connected with the accelerator pedal by the accelerator wire and the voltage applied to the terminals VPA and VPA2 of the ECM changes between 0 V and 5 V in proportion to the opening angle of the accelerator pedal. The VPA is a signal to indicate the actual accelerator pedal opening angle which is used for the engine control, and the VPA2 is a signal to indicate the information about the opening angle which is used for detecting a malfunction.

The ECM judges the current opening angle of the accelerator pedal from these signals input from terminals VPA and VPA2 and the ECM controls the throttle motor based on these signals.

If this DTC is stored, the ECM shuts down the power for the throttle motor and the magnetic clutch, and the throttle valve is fully closed by the return spring.

However, the opening angle of the throttle valve can be controlled by the accelerator pedal through the throttle cable.

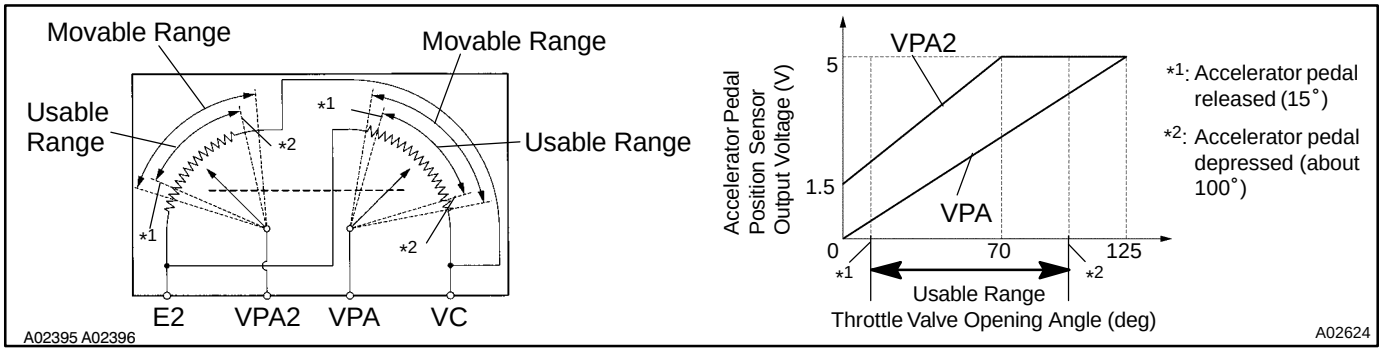

DTC No.	DTC Detection Condition	Trouble Area
P2122	Condition (a) and (b) continues for 0.5 sec. or more: (a) VPA1 < 0.2 V (b) VPA2 > 0.97 deg	▲Open or short in accelerator pedal position sensor circuit ▲Accelerator pedal position sensor ▲ECM
P2123	Condition (a) and (b) continues for 2.0 sec. or more: (a) VPA1 > 4.8 V	
P2120	Condition (a) continues for 0.5 sec. or more: (a) VPA1 < 0.2 V and VPA2 > 0.97 deg, or VPA1 > 4.8 V	
P2127	Condition (a) and (b) continues for 0.5 sec. or more: (a) VPA2 < 0.5 V (b) VPA1 > 0.97 deg	
P2128	Condition (a) and (b) continues for 2.0 sec. or more: (a) VPA1 > 4.8 V (a) 0.2 V < VPA1 < 3.45 V	
P2125	Condition (a) continues for 0.5 sec. or more: (a) VPA2 < 0.5 V and VPA1 > 0.97 deg, or VPA1 > 4.8 V and 0.2 V < VPA1 < 3.45 V	
P2138	Condition (a) or (b) continues for 2.0 sec. or more: (a) |VPA1 – VPA2| < 0.02 V (b) VPA1 < 0.2 V and VPA2 < 0.5 V	

HINT:
After confirming DTC P2120, P2122, P2123, P2125, P2127, P2128 and P2138 use the OBD II scan tool or the hand–held tester to confirm the throttle valve opening percentage.

Trouble area	Accelerator pedal position expressed as voltage			
	Accelerator pedal released		Accelerator pedal depressed	
	ACCEL POS #1	ACCEL POS #2	ACCEL POS #1	ACCEL POS #2
VC circuit open	0 V	0 V	0 V	0 V
VPA circuit open or ground short	0 V	0.9 – 2.3 V	0 V	3.4 – 5.0 V
VPA2 circuit open or ground short	0.5 – 1.1 V	0 V	3.0 – 4.6 V	0 V
E2 circuit open	5 V	5 V	5 V	5 V

WIRING DIAGRAM

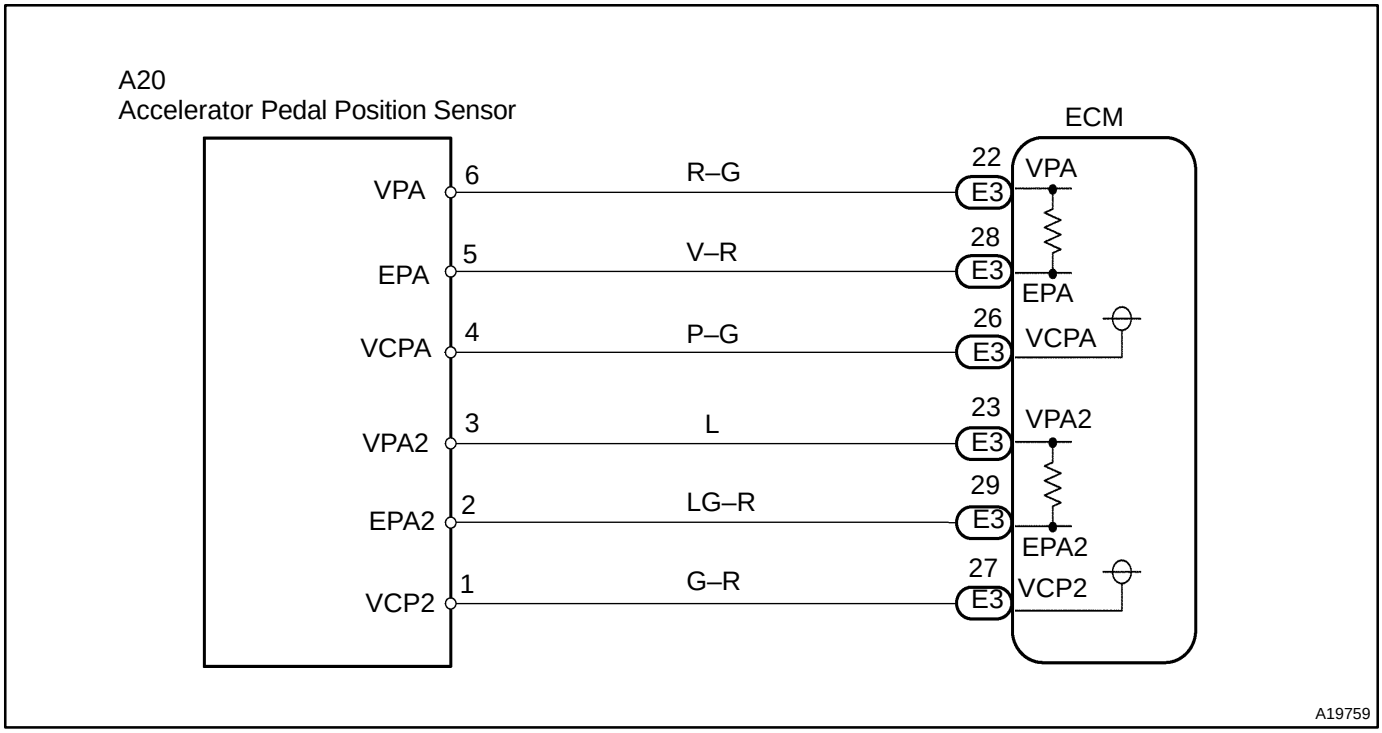

INSPECTION PROCEDURE

HINT:
Read freeze frame data using hand–held tester or OBD II scan tool, as freeze frame data records the engine conditions when a malfunction is detected. When troubleshooting, it is useful for determining whether the vehicle was running or stopped, the engine was warmed up or not, the air–fuel ratio was lean or rich, etc. at the time of the malfunction.

Hand–held tester:

1	**Connect hand–held tester, and read the voltage for accelerator pedal position sensor data.**

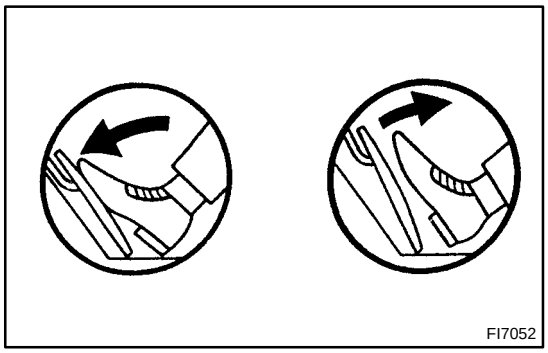

PREPARATION:

(a) Connect the hand–held tester to the DLC3.

(b) Turn the ignition switch ON and push the hand–held tester main switch ON.

CHECK:

Read the voltage for the accelerator pedal position sensor data.

OK:

Accelerator Pedal	VPA	VPA2
Released	0.3 – 0.9 V	1.8 – 2.7 V
Depressed	3.2 – 4.8 V	4.7 – 5.1 V

OK	**Check and replace ECM (See page IN–27).**

NG

2	**Check voltage between terminals VC and E2 of ECM connector.**

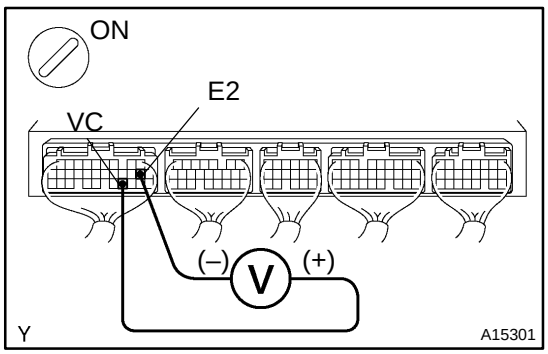

PREPARATION:

(a) Remove the glove compartment (See page SF–49).

(b) Turn the ignition switch ON.

CHECK:

Measure the voltage between terminals VC and E2 of the ECM connector.

OK:

Voltage: 4.5 – 5.5 V

NG	**Check and replace ECM (See page IN–27).**

OK

3	**Check voltage between terminals VPA and E2, and VPA2 and E2 of ECM connectors.**

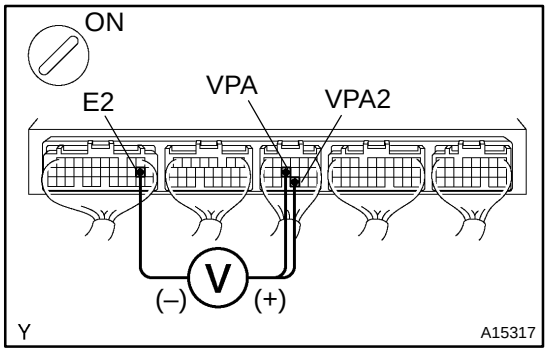

PREPARATION:

(a) Remove the glove compartment (See page SF–49).

(b) Turn the ignition switch ON.

CHECK:

Measure the voltage between terminals VPA and E2, and VPA2 and E2 of the ECM connectors.

OK:

Accelerator pedal	Voltage	
	VPA – E2	VPA2 – E2
Released	0.3 – 0.9 V	1.8 – 2.7 V
Depressed	3.2 – 4.8 V	4.7 – 5.1 V

OK → **Check and replace ECM (See page IN–27).**

NG

4	**Check accelerator pedal position sensor (See page SF–27).**

NG → **Replace accelerator pedal position sensor (See page SF–29).**

OK

Check for open and short in harness and connector in VC, VPA, VPA2 and E2 circuits between ECM and accelerator pedal position sensor (See page IN–27).

OBD II scan tool (excluding hand–held tester):

1	**Check voltage between terminals VC and E2 of ECM connector.**

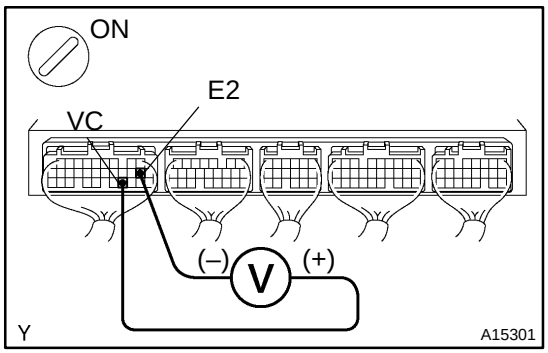

PREPARATION:
(a) Remove the glove compartment (See page SF–49).
(b) Turn the ignition switch ON.

CHECK:
Measure the voltage between terminals VC and E2 of the ECM connector.

OK:
Voltage: 4.5 – 5.5 V

NG → **Check and replace ECM (See page IN–27).**

OK

2	**Check voltage between terminals VPA and E2, and VPA2 and E2 of ECM connector.**

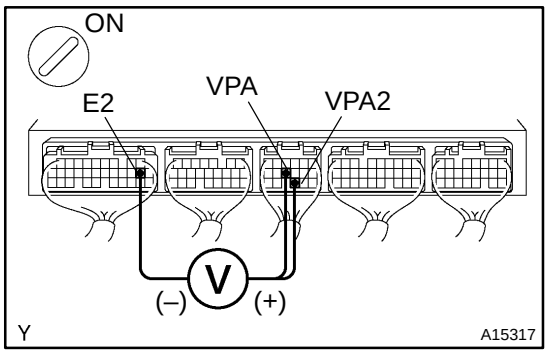

PREPARATION:
(a) Remove the glove compartment (See page SF–49).
(b) Turn the ignition switch ON.

CHECK:
Measure the voltage between terminals VPA and E2, and VPA2 and E2 of the ECM connectors.

OK:

Accelerator pedal	Voltage	
	VPA – E2	VPA2 – E2
Released	0.3 – 0.9 V	1.8 – 2.7 V
Depressed	3.2 – 4.8 V	4.7 – 5.1 V

OK → **Check and replace ECM (See page IN–27).**

NG

3	Check accelerator pedal position sensor (See page SF–27).

NG → Replace accelerator pedal position sensor (See page SF–29).

OK →

Check for open and short in harness and connector in VC, VPA, VPA2 and E2 circuits between ECM and accelerator pedal position sensor (See page IN–27).

DTC	P2195	Oxygen (A/F) Sensor Signal Stuck Lean (Bank 1 Sensor 1)

DTC	P2196	Oxygen (A/F) Sensor Signal Stuck Rich (Bank 1 Sensor 1)

DTC	P2237	Oxygen Sensor Pumping Current Circuit / Open (for A/F sensor) (Bank 1 Sensor 1)

DTC	P2238	Oxygen Sensor Pumping Current Circuit / Low (for A/F sensor) (Bank 1 Sensor 1)

DTC	P2239	Oxygen Sensor Pumping Current Circuit / High (for A/F sensor) (Bank 1 Sensor 1)

CIRCUIT DESCRIPTION

To obtain a high purification rate of the CO, HC and NOx components of the exhaust gas, a three–way catalytic converter is used. But, for the most efficient use of the three–way catalytic converter, the air–fuel ratio must be precisely controlled so that it is always close to the stoichiometric air–fuel ratio.

The A/F sensor has a characteristic that the output voltage* becomes approximately proportional to the existing air–fuel ratio. The A/F sensor output voltage* is used to provide feedback for the ECM to control the air–fuel ratio. By the A/F sensor output, the ECM can determine the deviation amount from the stoichiometric air–fuel ratio and control the proper injection time immediately. If the A/F sensor malfunctions, the ECM is unable to perform the accurate air–fuel ratio control. The A/F sensor is equipped with a heater which heats the zirconia element. The heater is controlled by the ECM. When the intake air volume is low (the temperature of the exhaust gas is low), the current flows to the heater to heat the sensor for the accurate oxygen concentration detection.

*: The voltage value changes at the inside of the ECM only.

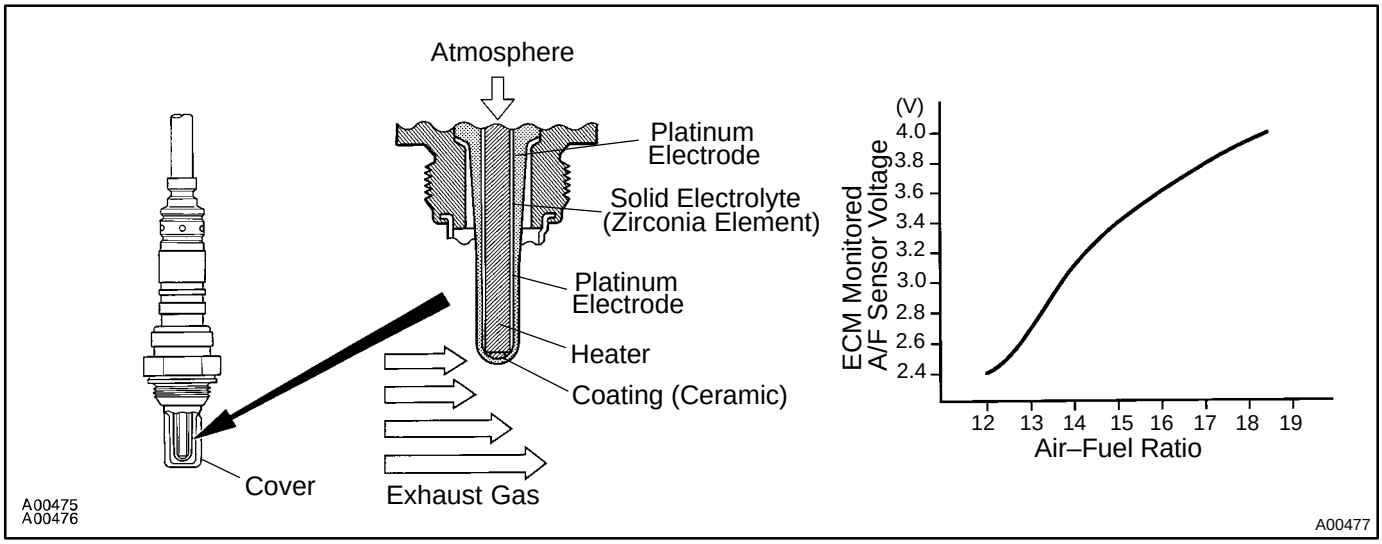

DTC No.	DTC Detection Condition	Trouble Area
P2195	Condition (a) continues for 10.0 sec. or more: (a) A/F sensor voltage > 3.8 V	▲Open or short in A/F sensor circuit ▲A/F sensor ▲Air induction system ▲Fuel pressure ▲Injector ▲ECM
P2196	Condition (a) continues for 10.0 sec. or more: (a) A/F sensor voltage < 2.8 V	▲Open or short in A/F sensor circuit ▲A/F sensor ▲Air induction system ▲Fuel pressure ▲Injector ▲ECM

P2237	A/F sensor circuit (bank 1 sensor 1)	HINT: Main trouble area ▲Open or short in A/F sensor circuit
	Condition (a) and (b) continues for 5.0 sec. or more: (a) AF+ < 0.5 V (b) AF+ > 4.5 V	▲Open or short in A/F sensor circuit ▲A/F sensor ▲Air induction system ▲Fuel pressure ▲Injector ▲ECM
	Condition (a) and (b) continues for 5.0 sec. or more: (a) AF+ – AF– < 0.1 V (b) AF+ – AF– > 0.8 V	▲Open or short in A/F sensor circuit ▲A/F sensor ▲Air induction system ▲Fuel pressure ▲Injector ▲ECM
P2238	A/F sensor circuit low (bank 1 sensor 1)	HINT: Main trouble area ▲Open in A/F sensor circuit
	Condition (a) continues for 5.0 sec. or more: (a) AF+ < 0.5 V	▲Open or short in A/F sensor circuit ▲A/F sensor ▲Air induction system ▲Fuel pressure ▲Injector ▲ECM
	Condition (a) continues for 5.0 sec. or more: (a) AF+ – AF– < 0.1 V	▲Open or short in A/F sensor circuit ▲A/F sensor ▲Air induction system ▲Fuel pressure ▲Injector ▲ECM
P2239	A/F sensor circuit high (bank 1 sensor 1)	HINT: Main trouble area ▲Short in A/F sensor circuit
	Condition (a) continues for 5.0 sec. or more: (a) AF+ > 4.5 V	▲Open or short in A/F sensor circuit ▲A/F sensor ▲Air induction system ▲Fuel pressure ▲Injector ▲ECM
	Condition (a) continues for 5.0 sec. or more: (a) AF+ – AF– > 0.8 V	▲Open or short in A/F sensor circuit ▲A/F sensor ▲Air induction system ▲Fuel pressure ▲Injector ▲ECM

HINT:

- ▲ After confirming DTC P2195, P2196, P2237, P2238, P2239 use the hand–held tester or OBD II scan tool to confirm an output voltage of the A/F sensor (AFS B1 S1/O2S B1 S1) from the CURRENT DATA.
- ▲ The A/F sensor's output voltage and the short–term fuel value can be read using the OBD II scan tool or hand–held tester.
- ▲ The ECM controls the voltage of AF1+ and AF1– terminals of ECM to the fixed voltage. Therefore, it is impossible to confirm the A/F sensor output voltage without OBD II scan tool or hand–held tester.
- ▲ OBD II scan tool (excluding hand–held tester) displays the one fifth of the A/F sensor output voltage which is displayed on the hand–held tester.

WIRING DIAGRAM

Refer to DTC P0134 on page DI–53.

CONFIRMATION DRIVING PATTERN

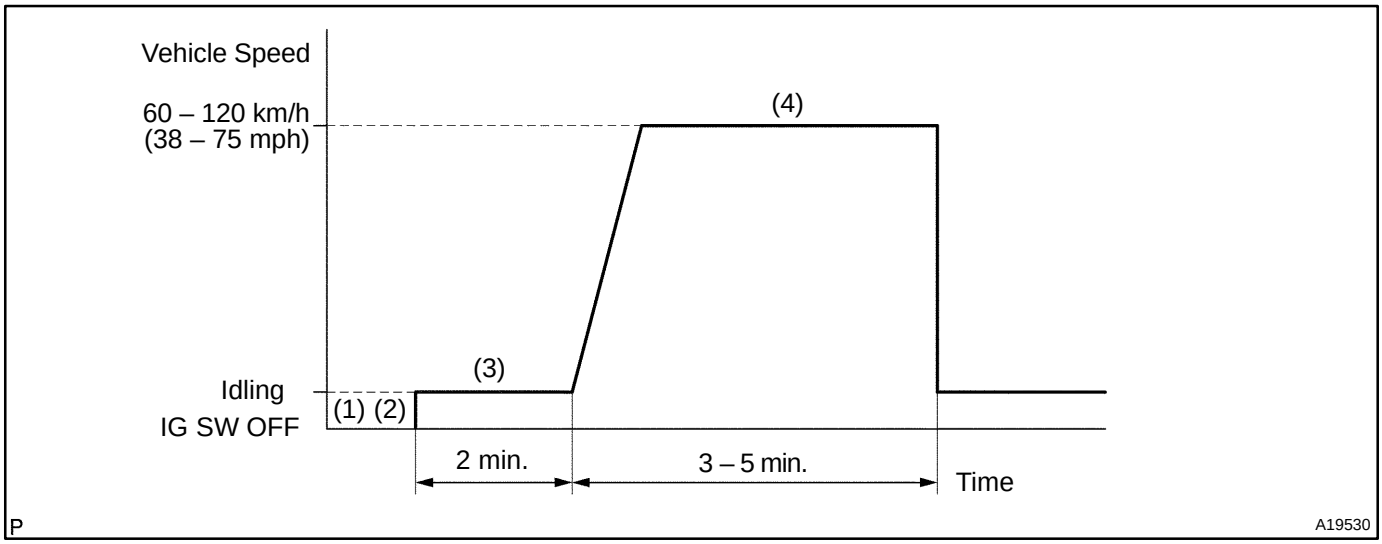

(a) Connect the hand–held tester to the DLC3.
(b) Switch the hand–held tester from the normal mode to the check mode (See page DI–3).
(c) Start the engine and warm it up for 2 min. with all the accessory switched OFF.
(d) Drive the vehicle at 60 – 120 km/h (38 – 75 mph) and the engine speed at 1,600 – 3,200 rpm for 3 – 5 min.

HINT:
If a malfunction exists, the MIL will light up during step (d).

NOTICE:

- **If the conditions in this test are not strictly followed, detection of the malfunction will not be possible.**
- **If you do not have a hand–held tester, turn the ignition switch OFF after performing steps (c) and (d), then perform steps (c) and (d) again.**

INSPECTION PROCEDURE

HINT:

- If DTC P1130 is displayed, check bank 1 sensor 1 circuit.
- Read frame freeze data using the hand–held tester or OBD II scan tool, as freeze frame data records the engine conditions when a malfunction is detected. When troubleshooting, it is useful for determining whether the vehicle was running or stopped, the engine was warmed up or not, the air–fuel ratio was lean or rich, etc. at the time of the malfunction.

1	**Are there any other codes (besides A/F sensor circuit DTC codes) being output?**

YES → **Go to relevant DTC chart.**

NO

2	**Check connection of PCV valve and hose.**

NG → **Repair or replace PCV valve and hose.**

OK

3	**Connect OBD II scan tool or hand–held tester, and read value for voltage output of A/F sensor.**

PREPARATION:

(a) Connect the OBD II scan tool or hand–held tester to the DLC3.

(b) Warm up the A/F sensor (bank 1 sensor 1) with the engine at 2,500 rpm for approximately 90 seconds

CHECK:

(a) Hand–held tester only:
Select the ”ENHANCED OBD2/SNAPSHOT/MANUAL SNAP SHOT/ ALL/” mode on the hand–held tester.

(b) Read the voltage of A/F sensor (bank 1 sensor 1) on the screen of the OBD II scan tool or hand–held tester when performing all the following conditions.

HINT:

The voltage of AF1A+ (+) – E1 (–) terminals of ECM is fixed at 3.3 V and the voltage of terminals AF1A– (–) – E1 is fixed at 3.0 V.

OK:

Normal condition:

Condition (Vehicle Stopped)	A/F Sensor Voltage Value (Normal Condition)
Engine idling	Under either condition shown on the left, voltage value changes a little in the vicinity of 3.3 V (0.660V)* (between approx. 3.1 V – 3.5 V) (See dwg. 1) *: When you using OBD II scan tool (excluding hand–held tester)
Engine is racing at approx. 2,500 rpm (when engine revolution is not suddenly changed)	
Engine is racing (when fuel cut)*2 (The number of revolution is increased to approx. 4,000 rpm temporarily, and then decreased to idle speed with accelerator pedal completely released) *2 : If battery terminal is disconnected, vehicle may need to be driven at 10 km/h (6 mph) or more to cause fuel cut.	Under the condition shown on the left, voltage value changes into 3.8 V (0.76 V)* or more temporarily (See dwg. 1) *: When you using OBD II scan tool (excluding hand–held tester)

(dwg. 1) Vehicle Stopped:

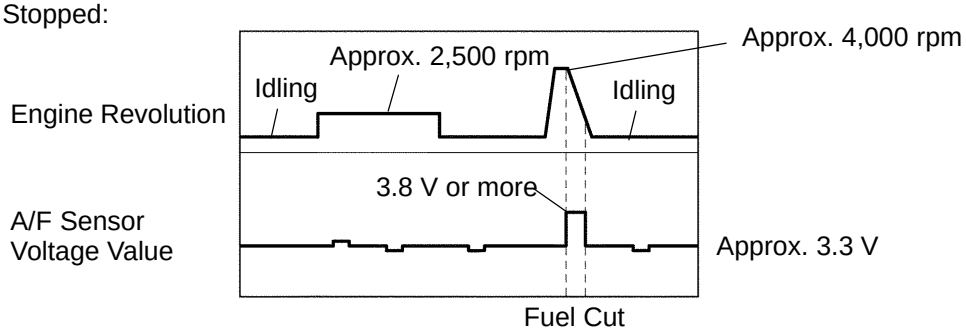

P A19531

HINT:
When the vehicle is driven:
In the case that the output voltage of the A/F sensor is below 2.8 V (0.76 V)* during fuel enrichment (for example, when the vehicle tries to overtake another vehicle on a highway, the vehicle speed is suddenly increased with the accelerator pedal fully depressed), the A/F sensor are functioning normally.
*: When using the OBD II scan tool (excluding hand–held tester).

Malfunction condition:

Condition	A/F Sensor Voltage value (Malfunction Condition)
Engine idling	Under any conditions shown on the left, the voltage value does not change at all. (See dwg. 2)
Engine is racing at approx. 2,500 rpm (when engine revolution is not suddenly changed)	
Engine is racing (when fuel cut)*2 (The number of revolution is increased to approx. 4,000 rpm temporarily, and then decreased to idle speed with accelerator pedal completely released) *2 : If battery terminal is disconnected, vehicle may need to be driven at 10 km/h (6 mph) or more to cause fuel cut.	

(dwg. 2)

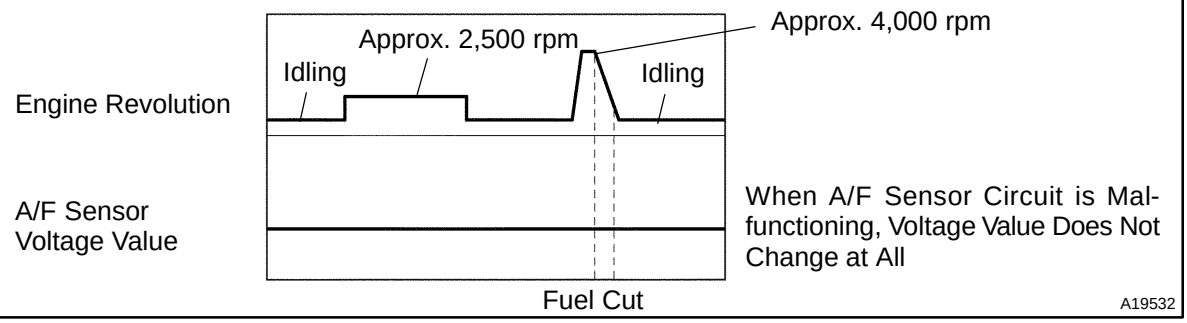

HINT:
- ▲ Whenever the output voltage of the A/F sensor remains at approx. 3.3 V (0.660 V)* (see dwg. 2) under any conditions as well as the above conditions, the A/F sensor may have an open–circuit. (This will happen also when the A/F sensor heater has an open–circuit.)
- ▲ Whenever the output voltage of the A/F sensor remains at a certain value of approx. 3.8 V (0.76 V)* or more, or 2.8 V (0.56 V)* or less (see dwg. 2) under any conditions as well as the above conditions, the A/F sensor may have a short–circuit.

*: When using the OBD II scan tool (excluding hand–held tester).

OK → **Go to step 14.**

NG

4	Check for open and short in harness and connector between ECM and A/F sensor (See page IN–27).

NG → Repair or replace harness or connector.

OK

5	Check resistance of A/F sensor heater (See page SF–46).

NG → Replace A/F sensor.

OK

6	Check air induction system (See page SF–1).

NG → Repair or replace.

OK

7	Check fuel pressure (See page SF–7).

NG → Check and repair fuel pump, pressure regulator, fuel pipe line and filter (See page SF–1).

OK

8	Check injector injection (See page SF–20).

NG → Replace injector.

OK

9	Check gas leakage on exhaust system.

NG → Repair or replace.

OK

10	Replace A/F sensor.

GO

11	Perform confirmation driving pattern.

GO

12	Are there A/F sensor circuit DTC codes being output again?

YES → Check and replace ECM (See page IN–27).

NO

13	Did vehicle run out of fuel in past?

NO → Check for intermittent problems (See page DI–3).

YES

A/F sensor circuit DTC codes are caused by shortage of fuel.

14	Perform confirmation driving pattern.

GO

15	Are there A/F sensor circuit DTC codes being output again ?

NO → Go to step 19.

YES

16	Replace A/F sensor.

GO

17	Perform confirmation driving pattern.

GO

18	Are there A/F sensor circuit DTC codes being output again ?

YES → Check and replace ECM (See page IN–27).

NO

19	**Did vehicle run out of fuel in the past ?**

NO → **Check for intermittent problems (See page DI–3).**

YES

A/F sensor circuit DTC codes is caused by shortage of fuel.

DIAA1–01

DTC	P2A00	A/F Sensor Circuit Slow Response (Bank 1 Sensor 1)

CIRCUIT DESCRIPTION

Refer to DTC P2195 on page DI–167.

DTC No.	DTC Detection Condition	Trouble Area
P2A00	After engine is warmed up and during vehicle driving at engine speed 1,500 rpm or more and vehicle speed 40 km/h (25 mph) or more, if response characteristic of A/F sensor becomes deteriorated (2 trip detection logic)	▲Oper or short in A/F sensor circuit ▲A/F sensor ▲Air induction system ▲Fuel pressure ▲Injector ▲ECM

WIRING DIAGRAM

Refer to DTC P0134 on page DI–53.

INSPECTION PROCEDURE

HINT:

Read freeze frame data using the hand–held tester or OBD II scan tool, as freeze frame records the engine conditions when the malfunction is detected. When troubleshooting, it is useful for determining whether the vehicle was running or stopped, the engine was warmed up or not, the air–fuel ratio was lean or rich, etc. at the time of the malfunction.

1	**Are there any other codes (besides DTC P2A00) being output?**

YES → **Go to relevant DTC chart (See page DI–14).**

NO

2	**Connect OBDII scan tool or hand–held tester, and read value for voltage output of A/F sensor.**

PREPARATION:

(a) Connect the OBD II scan tool or hand–held tester to the DLC3.

(b) Warm up the A/F sensor (bank 1 sensor 1) with the engine at 2,500 rpm for approximately 90 seconds

CHECK:

(a) Hand–held tester only:
Select the ”ENHANCED OBD2/SNAPSHOT/MANUAL SNAP SHOT/ ALL/” mode on the hand–held tester.

(b) Read the voltage of A/F sensor (bank 1 sensor 1) on the screen of the OBD II scan tool or hand–held tester when performing all the following conditions.

HINT:

The voltage of AF1A+ (+) – E1 (–) terminals of ECM is fixed at 3.3 V and the voltage of terminals AF1A– (–) – E1 is fixed at 3.0 V.

OK:

Normal condition:

Condition (Vehicle Stopped)	A/F Sensor Voltage Value (Normal Condition)
Engine idling	Under either condition shown on the left, voltage value changes a little in the vicinity of 3.3 V (0.660V)* (between approx. 3.1 V – 3.5 V) (See dwg. 1) *: When you using OBD II scan tool (excluding hand–held tester)
Engine is racing at approx. 2,500 rpm (when engine revolution is not suddenly changed)	
Engine is racing (when fuel cut)*2 (The number of revolution is increased to approx. 4,000 rpm temporarily, and then decreased to idle speed with accelerator pedal completely released) *2 : If battery terminal is disconnected, vehicle may need to be driven at 10 km/h (6 mph) or more to cause fuel cut.	Under the condition shown on the left, voltage value changes into 3.8 V (0.76 V)* or more temporarily (See dwg. 1) *: When you using OBD II scan tool (excluding hand–held tester)

(dwg. 1) Vehicle Stopped:

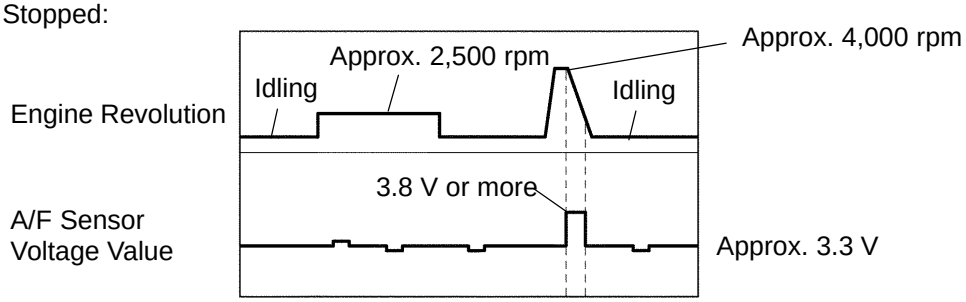

P A19531

HINT:

When the vehicle is driven:

In the case that the output voltage of the A/F sensor is below 2.8 V (0.76 V)* during fuel enrichment (for example, when the vehicle tries to overtake another vehicle on a highway, the vehicle speed is suddenly increased with the accelerator pedal fully depressed), the A/F sensor are functioning normally.

*: When using the OBD II scan tool (excluding hand–held tester).

Malfunction condition:

Condition	A/F Sensor Voltage Value (Malfunction Condition)
Engine idling	Under any conditions shown on the left, the voltage value does not change at all. (See dwg. 2)
Engine is racing at approx. 2,500 rpm (when engine revolution is not suddenly changed)	
Engine is racing (when fuel cut)*2 (The number of revolution is increased to approx. 4,000 rpm temporarily, and then decreased to idle speed with accelerator pedal completely released) *2 : If battery terminal is disconnected, vehicle may need to be driven at 10 km/h (6 mph) or more to cause fuel cut.	

(dwg. 2)

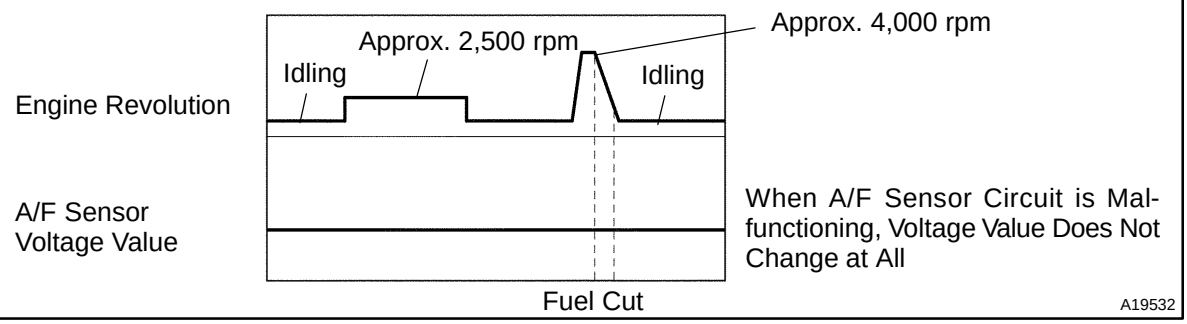

HINT:

- ▲ Whenever the output voltage of the A/F sensor remains at approx. 3.3 V (0.660 V)* (see dwg. 2) under any conditions as well as the above conditions, the A/F sensor may have an open–circuit. (This will happen also when the A/F sensor heater has an open–circuit.)
- ▲ Whenever the output voltage of the A/F sensor remains at a certain value of approx. 3.8 V (0.76 V)* or more, or 2.8 V (0.56 V)* or less (see dwg. 2) under any conditions as well as the above conditions, the A/F sensor may have a short–circuit.

*: When using the OBD II scan tool (excluding hand–held tester).

OK → **Go to step 12.**

NG

3	**Check for open and short in harness and connector between ECM and A/F sensor (See page IN–27).**

NG → **Repair or replace harness or connector.**

OK

4	Check resistance of A/F sensor heater (See page SF–46).

NG → Replace A/F sensor.

OK

5	Check air induction system (See page SF–1).

NG → Repair or replace.

OK

6	Check fuel pressure (See page SF–7).

NG → Check and repair fuel pump, pressure regulator, fuel pipe line and filter (See page SF–1).

OK

7	Check injector injection (See page SF–20).

NG → Replace injector.

OK

8	Replace A/F sensor.

GO

9	Perform confirmation driving pattern (See page DI–167).

GO

10	Is there DTC P2A00 being output again?

YES → Check and replace ECM (See page IN–27).

NO

11	Did vehicle run out of fuel in past?

NO → Check for intermittent problems (See page DI–3).

YES

DTC P2A00 is caused by shortage of fuel.

12	Perform confirmation driving pattern (See page DI–167).

Go

13	Is there DTC P2A00 being output again?

NO → Go to step 17.

YES

14	Replace A/F sensor.

GO

15	Perform confirmation driving pattern (See page DI–167).

GO

16	Is there DTC P2A00 being output again?

YES → Check and replace ECM (See page IN–27).

NO

17	Did vehicle run out of fuel in past?

NO → Check for intermittent problems (See page DI–3).

YES

DTC P2A00 is caused by shortage of fuel.

DIAA2–01

ECM Power Source Circuit

CIRCUIT DESCRIPTION

When the ignition switch is turned ON, battery positive voltage is applied to the coil, closing the contacts of the EFI main relay (Marking: EFI) and supplying power to terminal +B of the ECM.

WIRING DIAGRAM

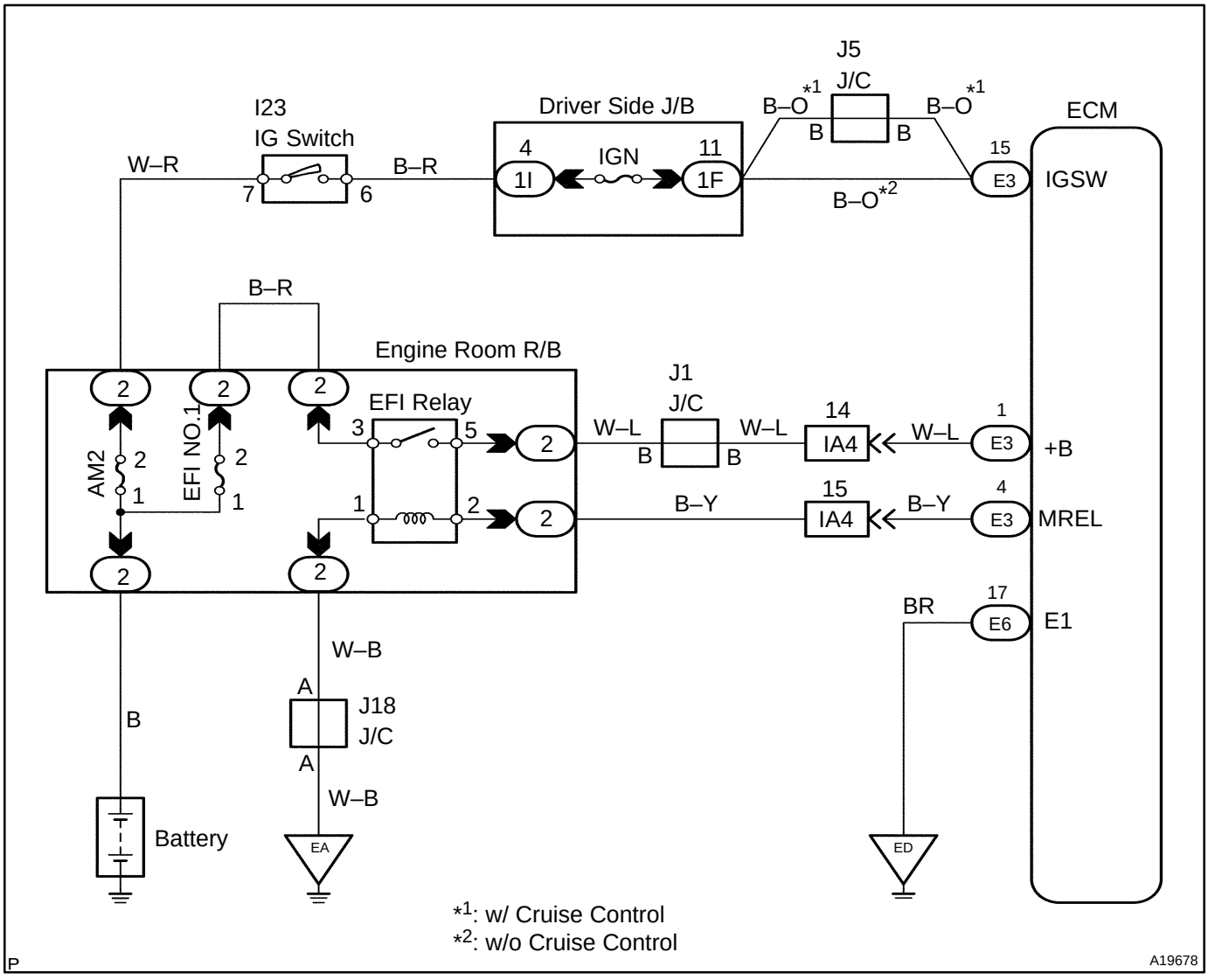

INSPECTION PROCEDURE

1	**Check voltage between terminals +B and E1 of ECM connectors.**

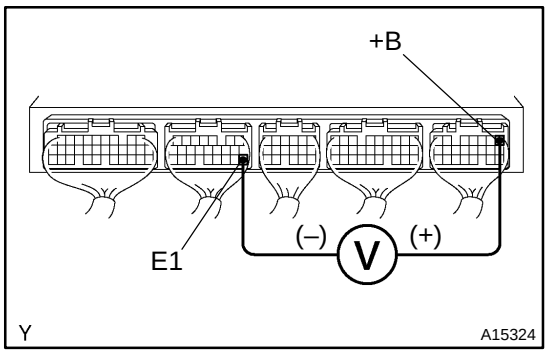

PREPARATION:

(a) Remove the glove compartment (See page SF–49).

(b) Turn the ignition switch ON.

CHECK:

Measure the voltage between terminals +B and E1 of the ECM connectors.

OK:

Voltage: 9 – 14 V

OK	**Proceed to next circuit inspection shown on Problem symptoms table (See page DI–24).**

NG

2	**Check for open in harness and connector between terminal E1 of ECM and body ground (See page IN–27).**

NG	**Repair or replace harness or connector.**

OK

3	**Check voltage between terminal IGSW of ECM connector and body ground.**

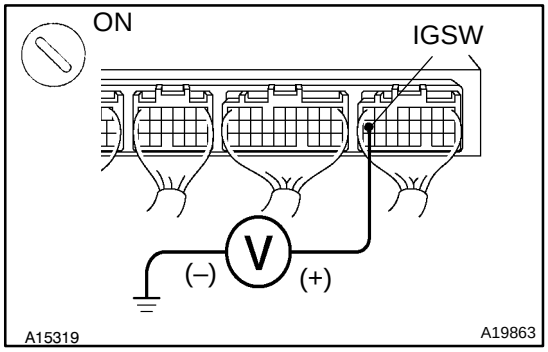

PREPARATION:

Turn the ignition switch ON.

CHECK:

Measure the voltage between terminal IGSW of the ECM and body ground.

OK:

Voltage: 9 – 14 V

OK	**Go to step 6.**

NG

4	**Check IGN fuse.**

PREPARATION:
Remove the IGN fuse from the driver side J/B.
CHECK:
Check the continuity of the IGN fuse.
OK:
Continuity

NG → **Check for short in all harness and components connected to IGN fuse.**

OK

5	**Check ignition switch (See page BE–15).**

NG → **Replace ignition switch.**

OK

Check and repair harness and connector between battery and ignition switch, and ignition switch and ECM.

6	**Check voltage between terminal MREL of ECM connector and body ground.**

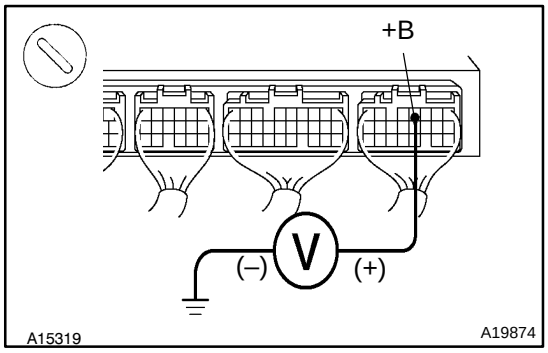

PREPARATION:
(a) Remove the glove compartment (See page SF–48).
(b) Turn the ignition switch ON.

CHECK:
Measure the voltage between terminal MREL of the ECM connector and body ground.
OK:
Voltage: 9 – 14 V

NG → **Check and replace ECM (See page IN–27).**

OK

7	Check EFI No.1 fuse (See page DI–135).

NG → Check for short in all harness and components connected to EFI No.1 fuse.

OK ↓

8	Check EFI main relay (Marking: EFI) (See page SF–31).

NG → Replace EFI main relay.

OK ↓

9	Check for open and short in harness and connector between terminal MREL of ECM and body ground (See page IN–27).

NG → Repair and replace harness or connector.

OK ↓

Check and repair harness or connector between EFI No.1 fuse and battery.

DI669–04

Fuel Pump Control Circuit

CIRCUIT DESCRIPTION

In the diagram below, when the engine is cranked, current flows from terminal ST of the ignition switch to the starter relay coil, the starter relay switches on and current flows to coil L1 of the circuit opening relay. Thus the circuit opening relay switches on, power is supplied to the fuel pump and the fuel pump operates. When the STA signal and NE signal are input to the ECM, Tr is turned ON, current flows to coil L2 of the circuit opening relay, the relay switches on, and the fuel pump operates. While the NE signal is generated (engine running), the ECM keeps Tr ON (circuit opening relay ON) and the fuel pump also keeps operating.

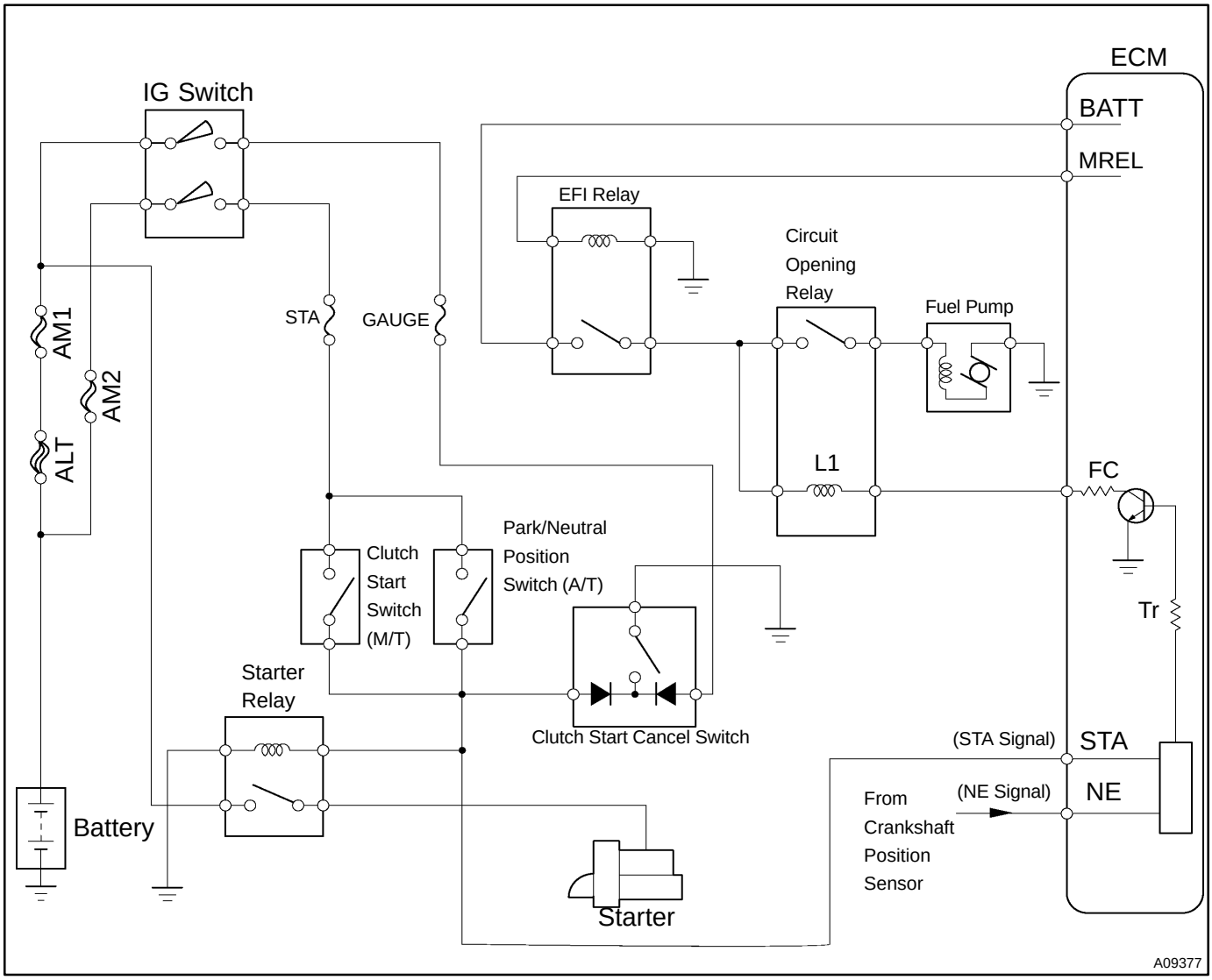

WIRING DIAGRAM

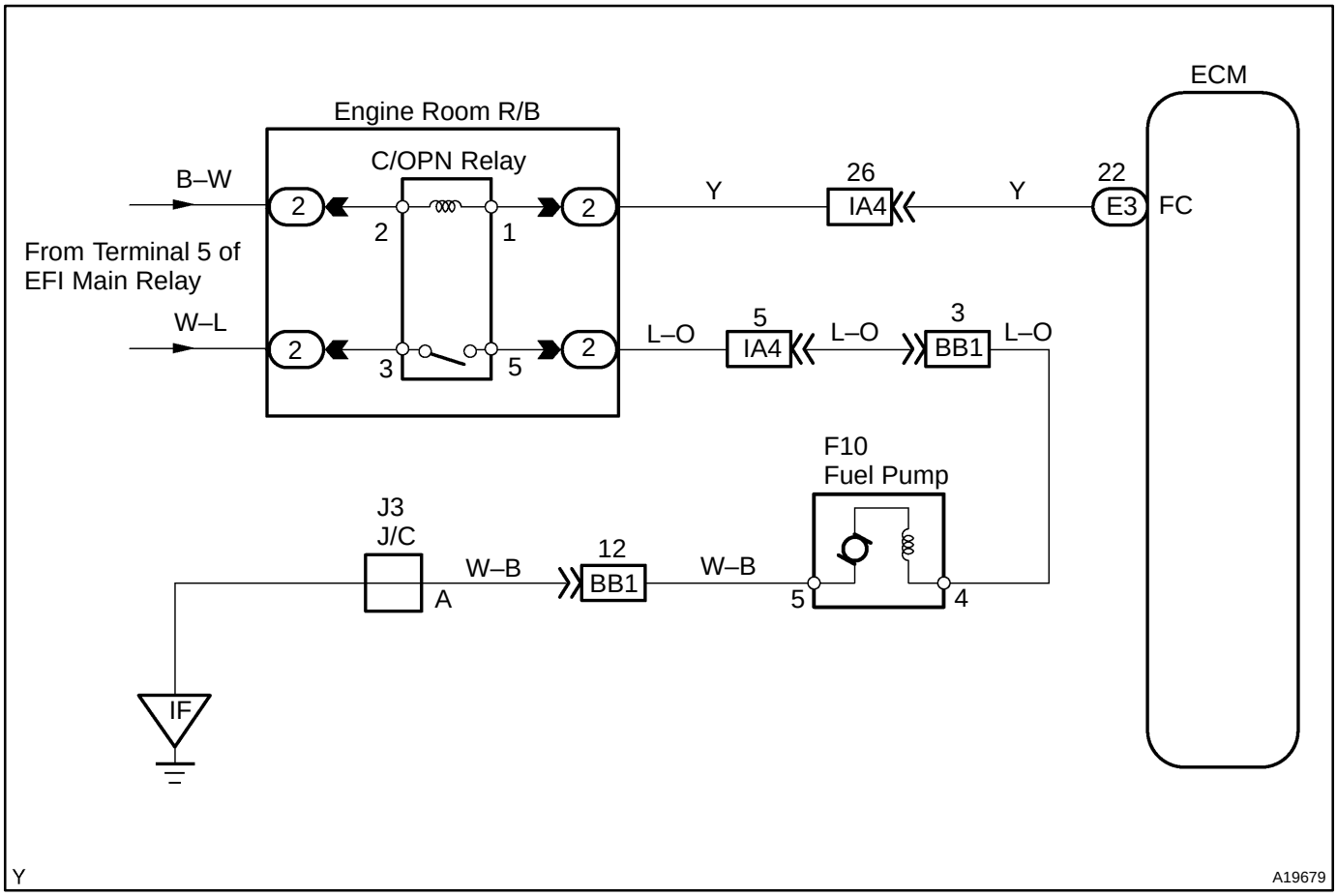

INSPECTION PROCEDURE

Hand–held tester:

1	**Connect hand–held tester, and check operation of fuel pump (See page DI–3, step 7).**

OK → **Check for starter signal circuit (See page DI–139).**

NG

2	**Check for ECM power source circuit (See page DI–183).**

NG → **Repair or replace.**

OK

3	**Check circuit opening relay (Marking: C/OPN) (See page SF–32).**

NG → **Replace circuit opening relay.**

OK

4	**Check voltage between terminal FC of ECM and body ground.**

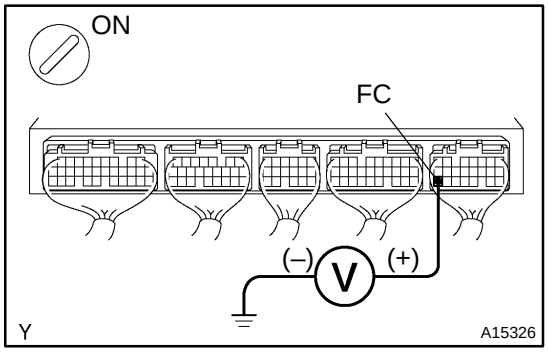

PREPARATION:

(a) Remove the glove compartment (See page SF–49).

(b) Turn the ignition switch ON.

CHECK:

Measure the voltage between terminal FC of the ECM connector and body ground.

OK:

Voltage: 9 – 14 V

NG → **Check for open in harness and connector between EFI main relay and circuit opening relay, and circuit opening relay and ECM.**

OK

5	**Check fuel pump (See page SF–7).**

NG → **Repair or replace fuel pump.**

OK

6	**Check for open in harness and connector between circuit opening relay and fuel pump, and fuel pump and body ground (See page IN–27).**

NG → **Repair or replace harness or connector.**

OK

Check and replace ECM (See page IN–27).

OBD II scan tool (excluding hand–held tester):

1	**Check operation of fuel pump.**

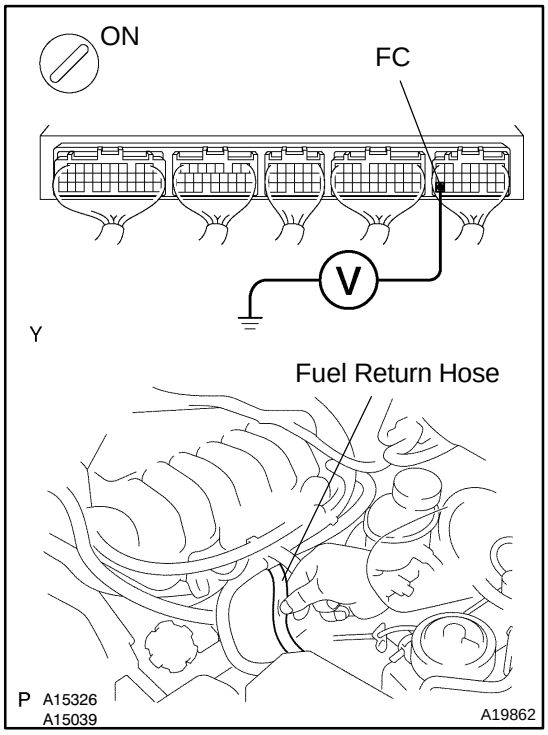

PREPARATION:
(a) Remove the glove compartment (See page SF–49).
(b) Turn the ignition switch ON.

CHECK:
(a) Connect between terminal FC of the ECM connector and body ground.
(b) Check for the fuel pressure in the return hose when it is pinched off.

OK:

There is pressure in the fuel return hose.

HINT:
At this time, you will hear a fuel flowing noise.

OK	**Check for starter signal circuit (See page DI–139).**

NG

2	**Check for ECM power source circuit (See page DI–183).**

NG	**Repair or replace.**

OK

3	**Check circuit opening relay (Marking: C/OPN) (See page SF–32).**

NG	**Replace circuit opening relay.**

OK

4	Check voltage between terminal FC of ECM connector and body ground (See page DI–187, step 4).

NG → Check for open in harness and connector between EFI main relay and circuit opening relay, and circuit opening relay and ECM.

OK ↓

5	Check fuel pump (See page SF–7).

NG → Repair or replace fuel pump.

OK ↓

6	Check for open in harness and connector between circuit opening relay and fuel pump, and fuel pump and body ground (See page IN–27).

NG → Repair or replace harness or connector.

OK ↓

Check and replace ECM (See page IN–27).

ANTI–LOCK BRAKE SYSTEM

DI657–05

HOW TO PROCEED WITH TROUBLESHOOTING

Troubleshoot in accordance with the procedure on the following pages.

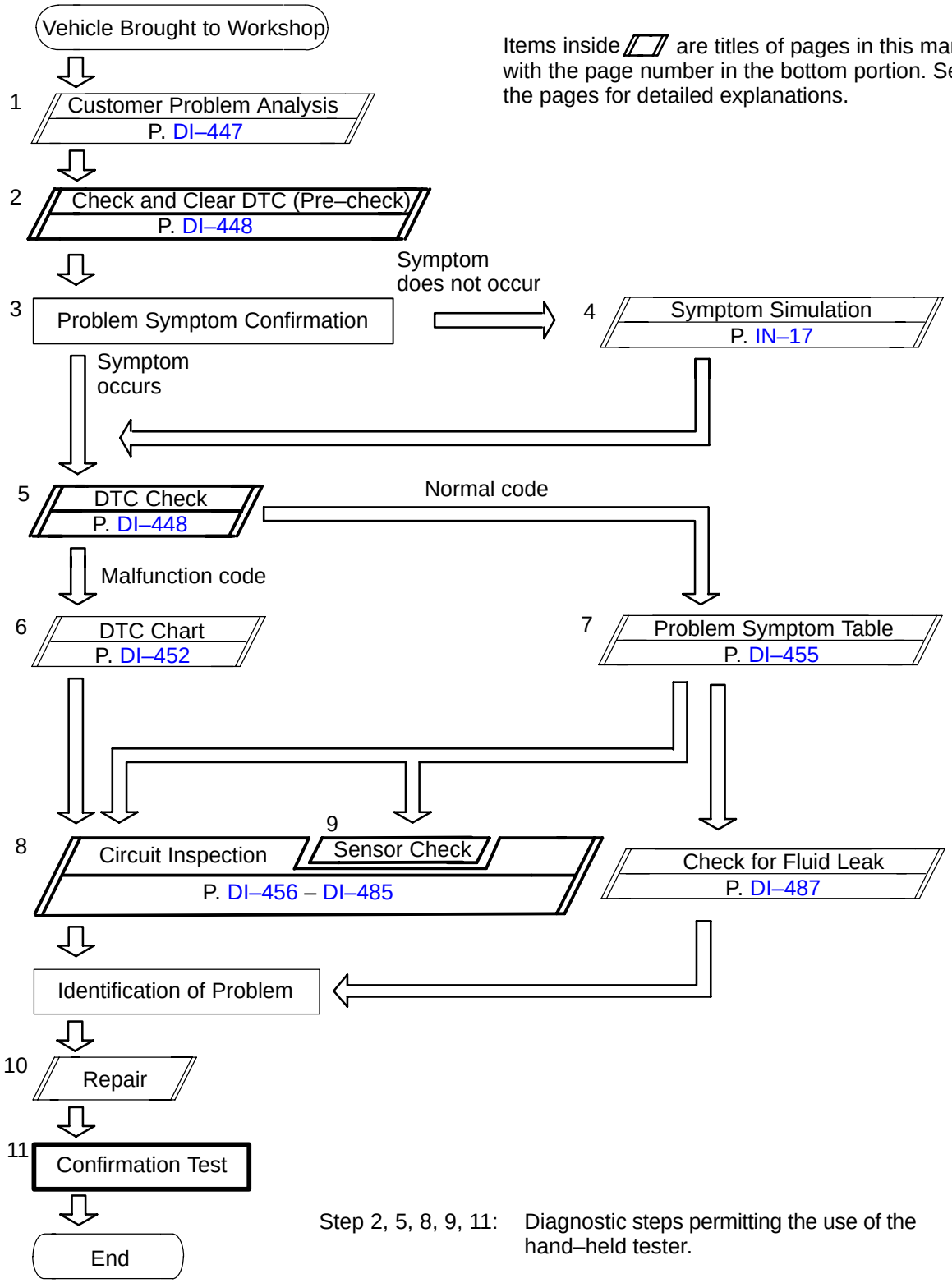

Items inside ▱ are titles of pages in this manual, with the page number in the bottom portion. See the pages for detailed explanations.

Step 2, 5, 8, 9, 11: Diagnostic steps permitting the use of the hand–held tester.

DI658–01

CUSTOMER PROBLEM ANALYSIS CHECK

ABS Check Sheet

Inspector's Name :

Customer's Name		**Registration No.**	
		Registration Year	/ /
		Frame No.	
Date Vehicle Brought In	/ /	**Odometer Reading**	km miles

Date Problem First Occurred	/ /
Frequency the Problem Occurs	☐ Continuously ☐ Intermittently (times a day)

Symptoms	☐ ABS does not operate.	
	☐ ABS does not operate efficiently.	
	ABS Warning Light Abnormal	☐ Remains ON ☐ Does not Light Up

DTC Check	**1st Time**	☐ Normal Code ☐ Malfunction Code (Code)
	2nd Time	☐ Normal Code ☐ Malfunction Code (Code)

DI8CS–02

PRE–CHECK

1. DIAGNOSIS SYSTEM

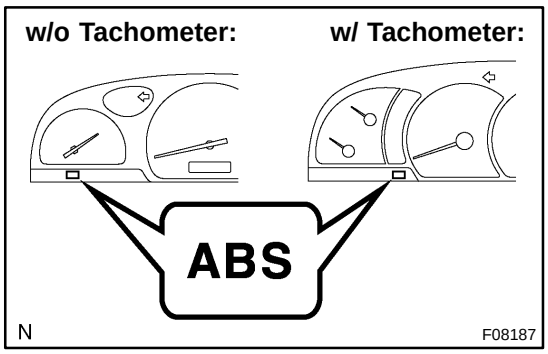

(a) Check the indicator.
When the ignition switch is turned ON, check that the ABS warning light is on for 3 seconds.

HINT:
If the indicator check result is not normal, proceed to trouble-shooting of the ABS warning light circuit (See page DI–480).

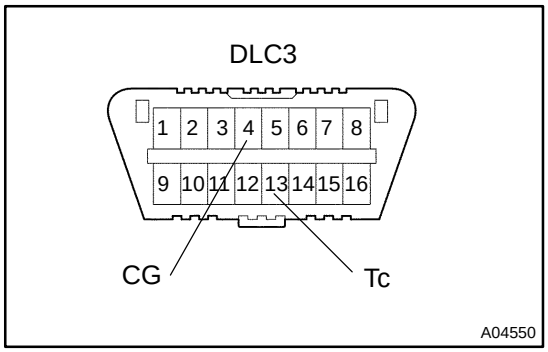

(b) In case of not using hand–held tester:
Check the DTC.
(1) Using SST, connect terminals Tc and CG of the DLC3.
SST 09843–18040
(2) Turn the ignition switch ON.
(3) Read the DTC from the ABS warning light on the combination meter.

HINT:
▲ If no code appears, inspect the ABS warning light circuit or diagnostic circuit (See page DI–480 or DI–483).

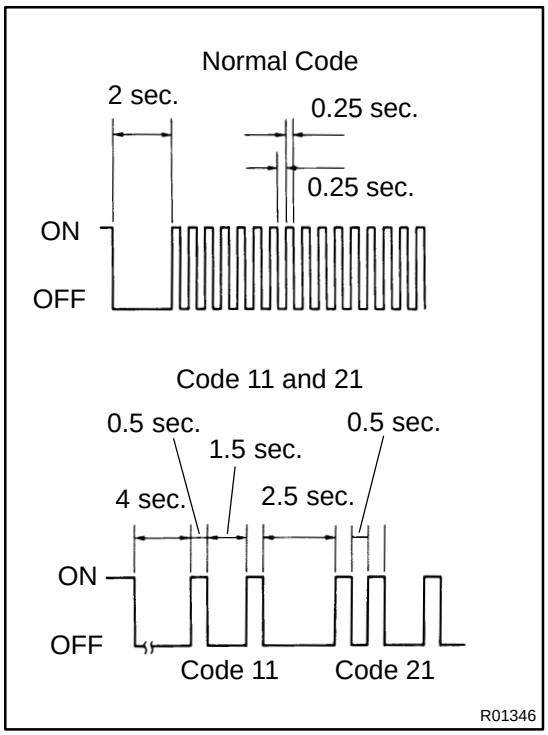

▲ As an example, the blinking patterns of normal code and codes 11 and 21 are shown in the left.
(4) Codes are explained in the code table on page DI–452.
(5) After completing the check, disconnect terminals Tc and CG, and turn off the display.

If 2 or more malfunctions are indicated at the same time, the lowest numbered DTC will be displayed first.

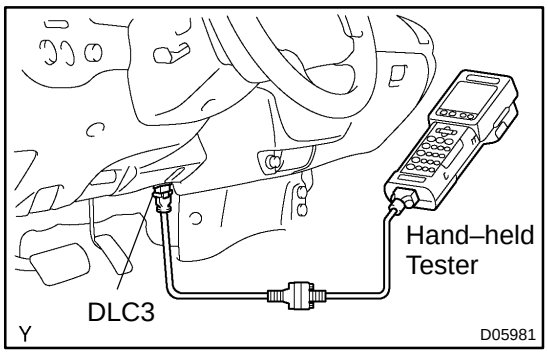

(c) In case of using hand–held tester:
Check the DTC.
(1) Connect the hand–held tester to the DLC3.
(2) Read the DTC by following the prompts on the tester screen.

HINT:
Please refer to the hand–held tester operator's manual for further details.

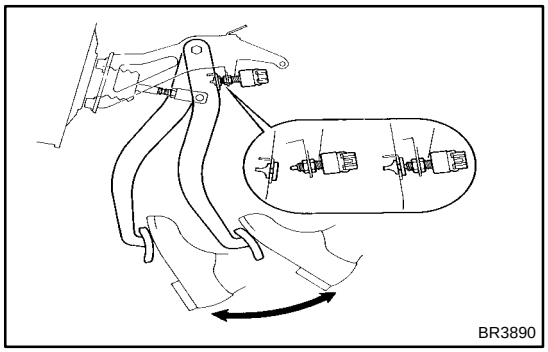

(d) In case of not using hand–held tester:
Clear the DTC.
(1) Using SST, connect terminals Tc and CG of the DLC3.
SST 09843–18040
(2) Turn the ignition switch ON.
(3) Clear the DTC stored in the ECU by depressing the brake pedal 8 or more times within 5 seconds.
(4) Check that the warning light indicates the normal code.
(5) Remove the SST from the terminals of the DLC3.
SST 09843–18040

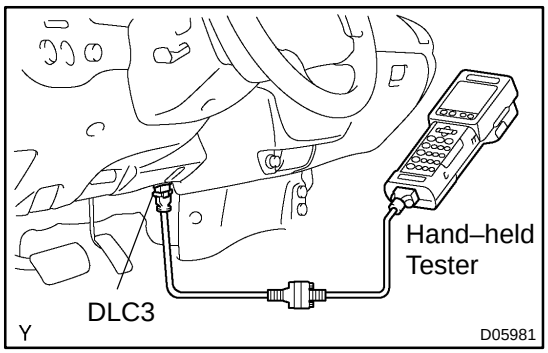

(e) In case of using hand–held tester:
Clear the DTC.
(1) Connect the hand–held tester to the DLC3.
(2) Turn the ignition switch ON.
(3) Operate the hand–held tester to erase the codes. (See the hand–held tester operator's manual)

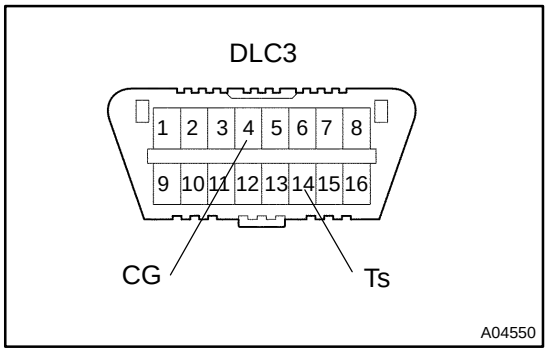

2. SENSOR SIGNAL CHECK (Test Mode)

HINT:
If the ignition switch is turned from ON to ACC or LOCK during the test mode, DTC will be erased.

(a) In case of not using hand–held tester:
Check the sensor signal.
(1) Turn the ignition switch OFF.
(2) Using SST, connect terminals Ts and CG of the DLC3.
SST 09843–18040

(3) Start the engine.

NOTICE:

Be sure to turn the ignition switch ON on flat place.

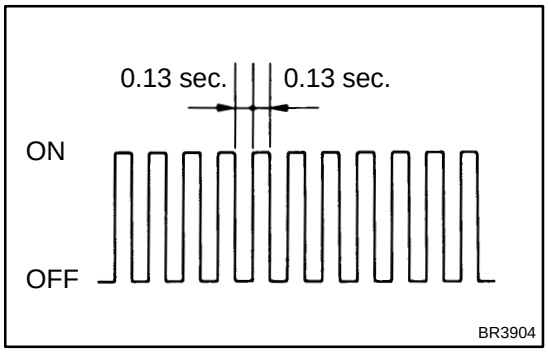

(4) Check that the ABS warning light blinks.

HINT:

If the ABS warning light does not blink, inspect the ABS warning light circuit and Ts circuit (See page DI–480, DI–485).

(5) Drive the vehicle straight forward.

NOTICE:

Step the vehicle for 1 second after turning the ignition switch ON, and then start driving.

HINT:

Drive the vehicle faster than 45 km/h (28 mph) for several seconds.

(6) Stop the vehicle.

(7) Using SST, connect terminals Tc and CG of the DLC3.

SST 09843–18040

(8) Read the number of blinks of the ABS warning light.

HINT:

- See the DTC list shown in the next page.
- If each is sensor is normal, a normal code is output (A cycle of 0.25 seconds ON and 0.25 seconds OFF is repeated).
- If 2 or more malfunctions are indicated at the same time, the lowest numbered code will be displayed first.

(9) After doing the check, disconnect terminals Ts, Tc and CG of the DLC3, and turn the ignition switch OFF.

Malfunction Code (Example Code 72, 76)

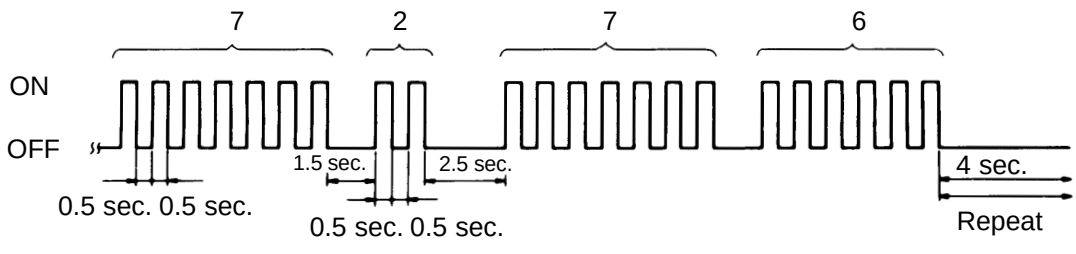

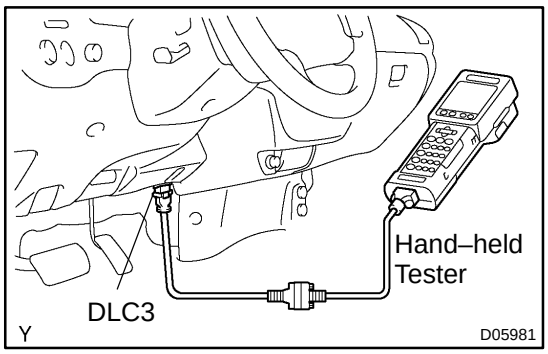

(b) In case of using hand–held tester:
Check the sensor signal.
(1) Connect the hand–held tester to the DLC3.
(2) Do step (3), (5) and (6) described and on the previous page.
(3) Read the DTC by following the prompts on the tester screen.

HINT:
Please refer to the hand–held tester operator's manual for further details.

DTC of sensor check function:

DTC No.	Detection Item	Trouble Area
C1271/71	Low output voltage of right front speed sensor	▲Right front speed sensor ▲Sensor installation
C1272/72	Low output voltage of left front speed sensor	▲Left front speed sensor ▲Sensor installation
C1273/73	Low output voltage of right rear speed sensor	▲Right rear speed sensor ▲Sensor installation
C1274/74	Low output voltage of left rear speed sensor	▲Left rear speed sensor ▲Sensor installation
C1275/75	Abnormal change in output voltage of right front speed sensor	Right front speed sensor rotor
C1276/76	Abnormal change in output voltage of left front speed sensor	Left front speed sensor rotor
C1277/77	Abnormal change in output voltage of right rear speed sensor	Right rear speed sensor rotor
C1278/78	Abnormal change in output voltage of left rear speed sensor	Left rear speed sensor rotor
C1279/79	Deceleration sensor output malfunction	Deceleration sensor

DI65A–06

DIAGNOSTIC TROUBLE CODE CHART

NOTICE:

Before replacing or removing parts, turn the ignition switch OFF.

HINT:

- Using SST 09643–18040, connect the terminals Tc and CG of the DLC3.
- If any abnormalties are not found when inspecting parts, inspect the ECU.
- If a malfunction code is displayed during the DTC check, check the circuit listed by a code. For details of each code, refer to the ”See page” under respective ”DTC No.” in the DTC chart.

DTC No. (See Page)	Detection Item	Trouble Area
C0278/11 (DI–466 and DI–464)	Open and short circuit in ABS solenoid and motor relay circuit	ABS solenoid relay and ABS motor relay in ABS ECU
C0226/21 (DI–462)	Open or short circuit in ABS actuator solenoid circuit	ABS actuator
C0200/31*1 (DI–456)	Right front wheel speed sensor signal malfunction	▲Right front, left front, right rear and left rear speed sensor ▲Each speed sensor circuit ▲Sensor rotor
C0205/32*1 (DI–456)	Left front wheel speed sensor signal malfunction	
C0210/33*1 (DI–456)	Right rear wheel speed sensor signal malfunction	
C0215/34*1 (DI–456)	Left rear wheel speed sensor signal malfunction	
C1337/37 (DI–468)	Some tires are different in size from the other tires	Tire size
C1241/41 (DI–469)	Low battery positive voltage or abnormally high battery positive voltage	▲Battery ▲Charging system ▲Power source circuit
C1244/44*2 (DI–472)	Malfunction in deceleration sensor	Deceleration sensor in ABS ECU
C1249/49 (DI–473)	Open circuit in stop light switch circuit	▲Stop light switch ▲Stop light switch circuit
C1251/51*1 (DI–475)	Pump motor is locked Open circuit in pump motor circuit	ABS pump motor
Always ON (DI–477)	Malfunction in ABS ECU	▲Battery ▲Charging system ▲Power source circuit

*1: As long as the following operations are not performed, ABS warning light will not go off only by repairing the trouble area.

(1) Drive the vehicle at 20 km/h (12 mph) for 30 seconds or more and check that the ABS warning light goes off.

(2) Clear the DTC (See page DI–448).

HINT:

There is a case that TOYOTA hand–held tester cannot be used when the ABS warning light is always ON.

DI65B–04

PARTS LOCATION

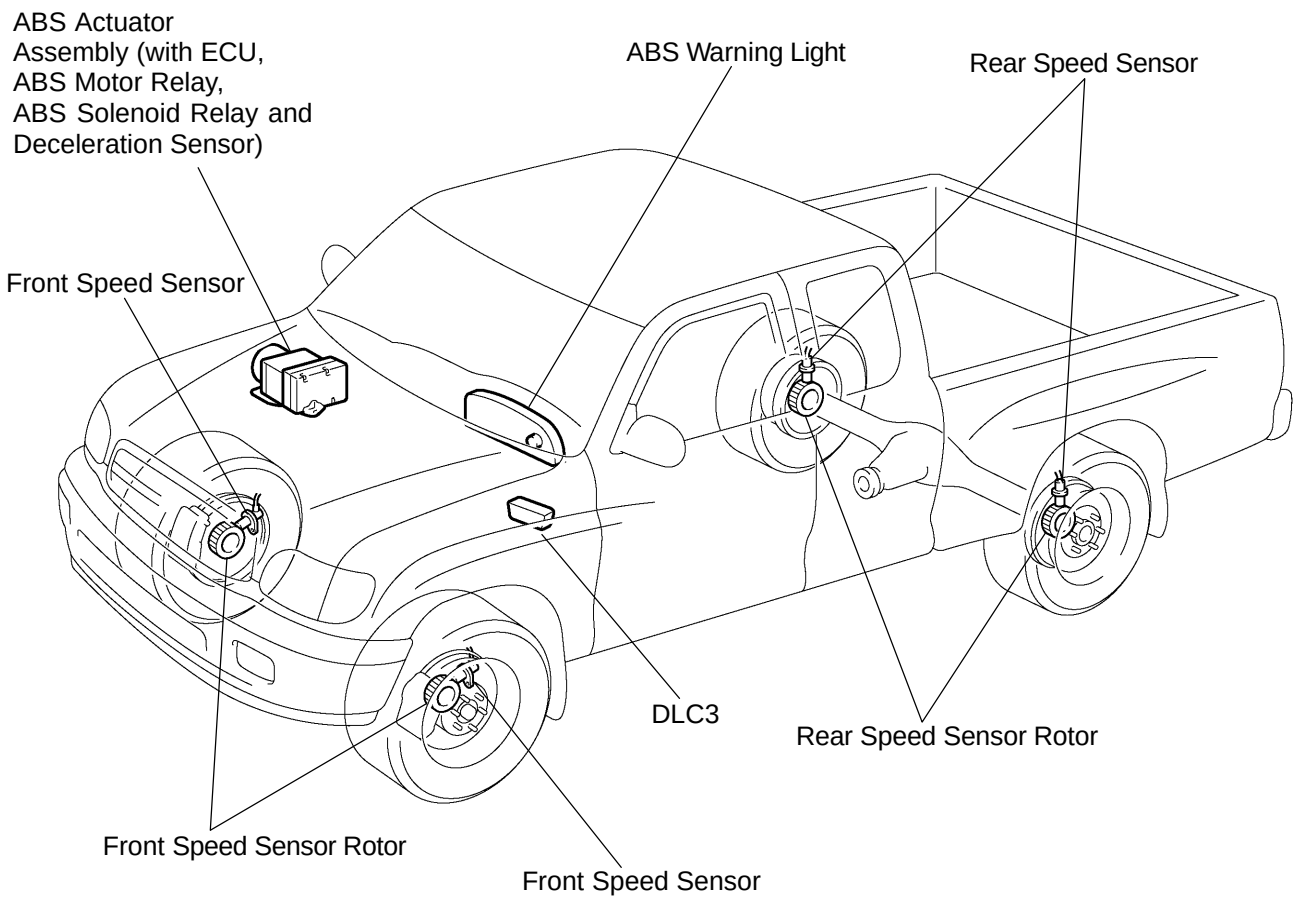

Y

F14016

DI65C–06

TERMINALS OF ECU

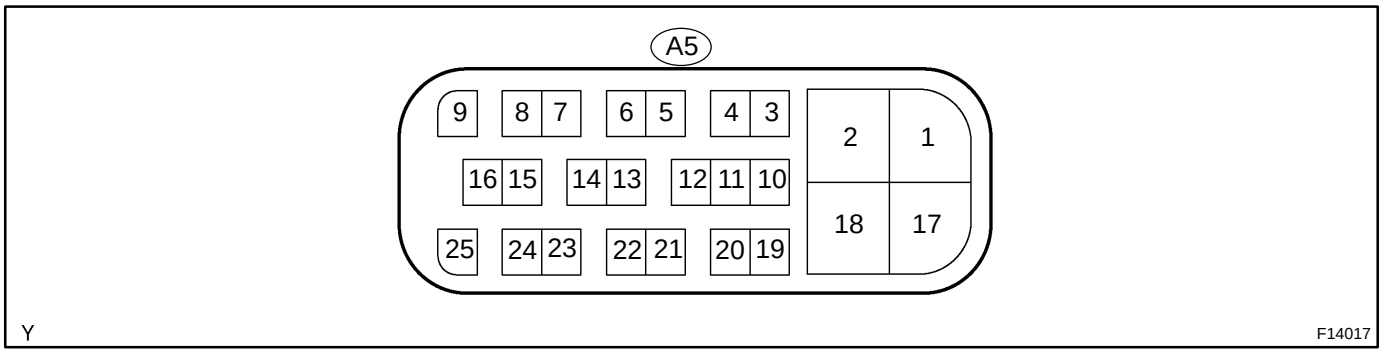

Symbols (Terminals No.)	Wiring Color	Condition	STD Voltage (V)
+BS (A5 – 1) – GND (A5 – 2, 18)	B–Y – W–B	Always	10 – 14
RR+ (A5 – 19) – RR– (A5 – 20)	B – Y	IG switch ON, slowly turn right rear wheel	AC generation
STP (A5 – 24) – GND (A5 – 2, 18)	G–W – W–B	Stop light switch OFF	Below 1.5
		Stop light switch ON	8 – 14
RL+ (A5 – 5) – RL– (A5 – 4)	R – W	IG switch ON, slowly turn left rear wheel	AC generation
Ts (A5 – 7) – GND (A5 – 2, 18)	W–L – W–B	IG switch ON	10 – 14
EXI (A5 – 14) – GND (A5 – 2, 18)	L–R – W–B	IG switch ON, transfer in L position	Below 1.5
		IG switch ON, transfer in any positions except L position	8 – 14
IG1 (A5 – 6) – GND (A5 – 2, 18)	Y – W–B	IG switch ON	10 – 14
D/G (A5 – 3) – GND (A5 – 2, 18)	W – W–B	IG switch ON	10 – 14
WA (A5 – 11) – GND (A5 – 2, 18)	B–L – W–B	IG switch ON, ABS warning light ON	Below 2.0
		IG switch ON, ABS warning light OFF	10 – 14
+BM (A5 – 17) – GND (A5 – 2, 18)	B–R – W–B	Always	10 – 14
Tc (A5 – 15) – GND (A5 – 2, 18)	W–G – W–B	IG switch ON	10 – 14
FR+ (A5 – 23) – FR– (A5 – 22)	LG – L	IG switch ON, slowly turn right front wheel	AC generation
FL+ (A5 – 9) – FL– (A5 –8)	P – V	IG switch ON, slowly turn left front wheel	AC generation

DI65D–04

PROBLEM SYMPTOMS TABLE

If a normal code is displayed during the DTC check but the problem still occurs, check the circuits for each problem symptom in the order given in the table below and proceed to the relevant troubleshooting page.

NOTICE:

When replacing ABS ECU, sensor or etc., turn the ignition switch OFF.

Symptom	Suspect Area	See page
ABS does not operate.	When the followings 1. to 4. are all normal but the problem still occurs, replace the ABS ECU. 1. Check the DTC reconfirming that the normal code is output. 2. IG power source circuit 3. Speed sensor circuit 4. Check the hydraulic circuit for leak.	 DI–448 DI–469 DI–456 DI–487
ABS does not operate efficiently.	When the followings 1. to 4. are all normal but the problem still occurs, replace the ABS ECU. 1. Check the DTC reconfirming that the normal code is output. 2. Speed sensor circuit 3. Stop light switch circuit 4. Check the hydraulic circuit for leak.	 DI–448 DI–456 DI–473 DI–487
ABS warning light abnormality.	1. ABS warning light circuit 2. ABS ECU	DI–480
DTC check is impossible.	When the following 1. and 2. are all normal and but problem still occurs, replace the ABS ECU. 1. ABS warning light circuit 2. Tc terminal circuit	 DI–480 DI–483
Speed sensor signal check is impossible.	1. Ts terminal circuit 2. ABS ECU	DI–485

DI65H–06

CIRCUIT INSPECTION

DTC	C0200/31 to C0215/34	Speed Sensor Circuit

CIRCUIT DESCRIPTION

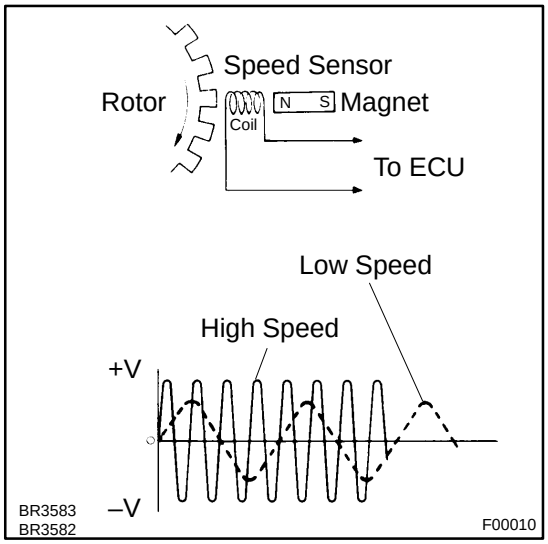

The speed sensor detects wheel speed and sends the appropriate signals to the ECU. These signals are used for control of the ABS control system. Each of the front and rear rotors has 48 serrations.
When the rotors rotate, the magnetic field emitted by the permanent magnet in the speed sensor generates AC voltage. Since the frequency of this AC voltage changes in direct proportion to the speed of the rotor, the frequency is used by the ECU to detect the speed of each wheel.

DTC No.	DTC Detection Condition	Trouble Area
C0200/31 C0205/32 C0210/33 C0215/34	Detection of any of conditions (a) through (d): (a) At vehicle speed of 10 km/h (6 mph) or more, pulses are not input for 15 sec. (b) Momentary interruption of the speed sensor signal occurs at least 7 times when the vehicle is driven at 15 km/h (9 mph) or more. (c) Abnormal signal occurred in the pulse signal from the speed sensor 75 times or more in 5 sec. continuously with the vehicle driven at 20 km/h (12 mph) or more. (d) The condition that the speed sensor signal circuit is open circuit continues for 0.6 sec. or more.	▲Right front, left front, right rear and left rear speed sensor ▲Each speed sensor circuit ▲Sensor rotor

HINT:
DTC No. C0200/31 is for the right front speed sensor.
DTC No. C0205/32 is for the left front speed sensor.
DTC No. C0210/33 is for the right rear speed sensor.
DTC No. C0215/34 is for the left rear speed sensor.
Fail safe function:
If any trouble occurs in the speed sensor circuit, the ECU cuts off the current to the ABS solenoid relay and prohibits the ABS control and brake system from being normal.

WIRING DIAGRAM

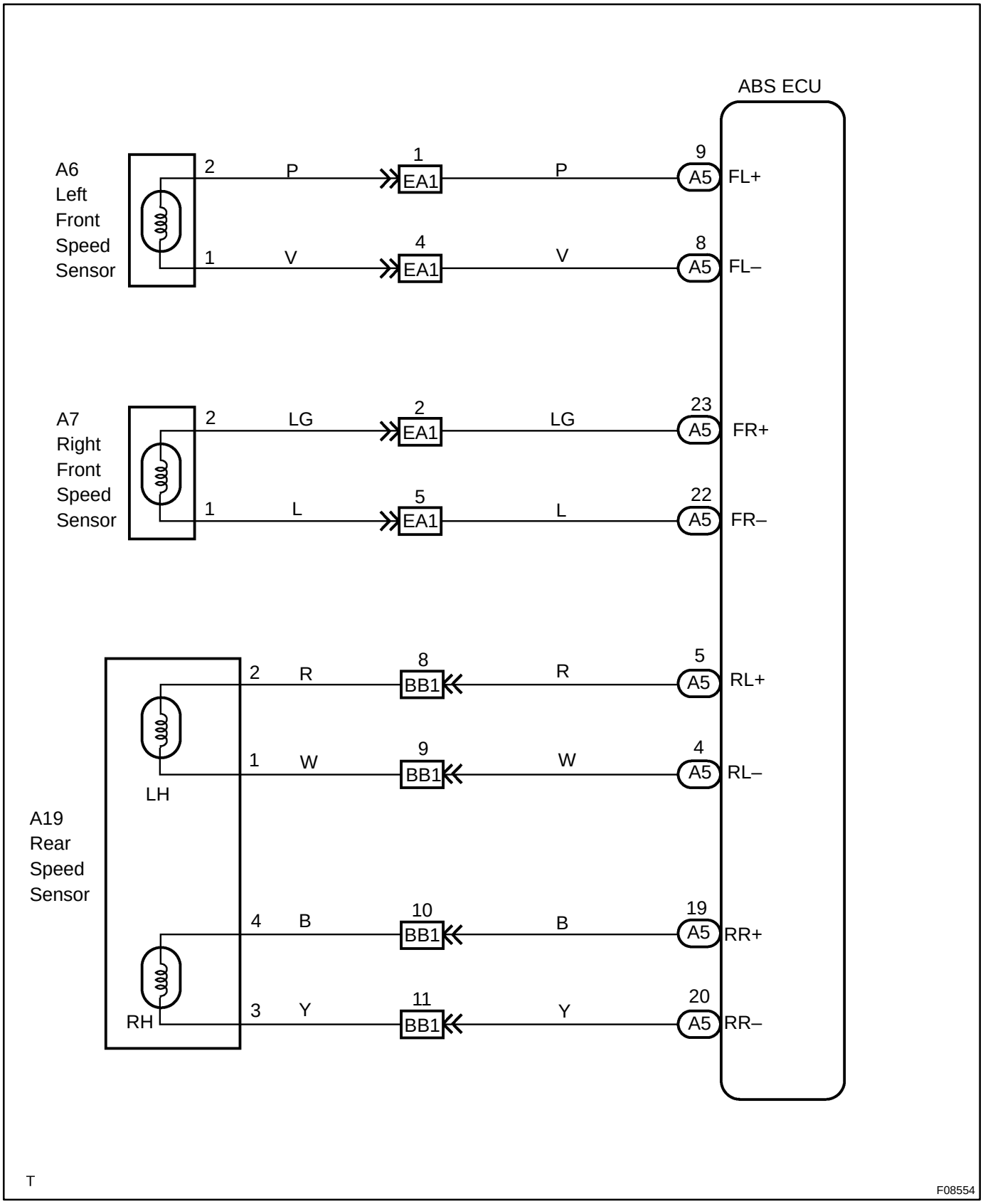

INSPECTION PROCEDURE

HINT:

Start the inspection from step 1 in case of using the hand–held tester and start from step 2 in case of not using hand–held tester.

1	**Check output value of speed sensor.**

PREPARATION:

(a) Connect the hand–held tester to the DLC3.
(b) Turn the ignition switch ON and press the hand–held tester main switch ON.
(c) Select the DATA LIST mode on the hand–held tester.

CHECK:

Check that there is no difference between the speed value output from the speed sensor and displayed by the hand–held tester and the speed value displayed by the speedometer when driving the vehicle.

OK:

There is almost no difference between both values.

HINT:

There is tolerance in the speedometer indication.

OK → **Check and replace ABS ECU.**

NG

2	**Check speed sensor.**

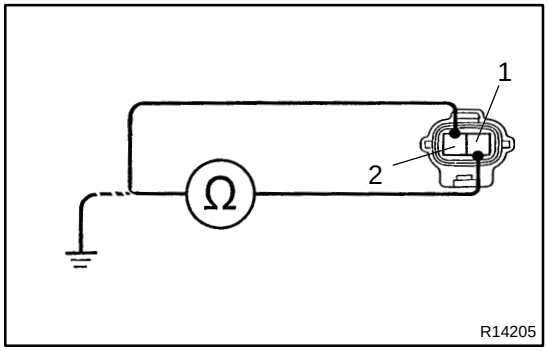

Front speed sensor:

PREPARATION:

Disconnect the speed sensor connector.

CHECK:

Measure the resistance between terminals 1 and 2 of the speed sensor connector.

OK:

Resistance: 0.6 – 2.5 kΩ or 0.9 – 1.8 kΩ at 20˚C

CHECK:

Measure the resistance between each of terminals 1 and 2 of the speed sensor connector and the body ground.

OK:

Resistance: 1 MΩ or higher

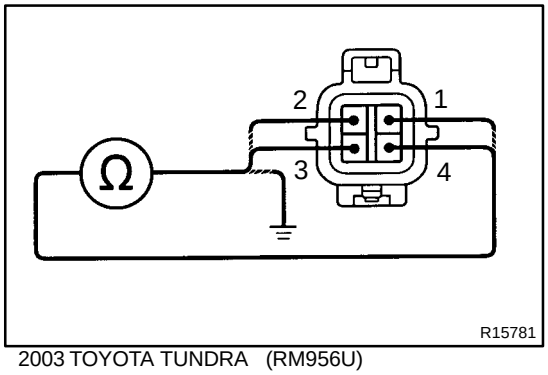

Rear speed sensor:

PREPARATION:

Disconnect the speed sensor connector.

CHECK:

Measure the resistance between terminals 1 – 2 and 3 – 4 of the speed sensor connector.

OK:

Resistance: 0.89 – 1.29 kΩ

CHECK:

Measure the resistance between terminals 1, 2, 3 and 4 of the speed sensor connector and the body ground.

OK:

Resistance: 1 MΩ or higher

NG	**Replace speed sensor.**

NOTICE:

Check the speed sensor signal last (See page DI–448).

OK

3	**Check for open and short circuit in harness and connector between each speed sensor and ABS ECU (See page IN–27).**

NG	**Repair or replace harness or connector.**

OK

4	**Check speed sensor and sensor rotor serrations.**

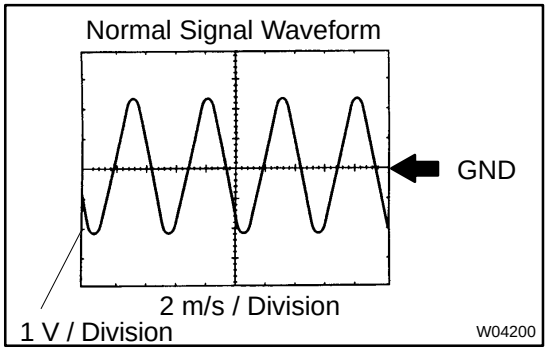

(REFERENCE) INSPECTION USING OSCILLOSCOPE

PREPARATION:

Connect the oscilloscope to the terminals FR+, FL+, RR+ or RL+ and GND of the ABS ECU.

CHECK:

Drive the vehicle at approximately 20 km/h (12 mph), and check the signal waveform.

HINT:

Check if foreign objects stick on the sensor tip when noise occurs.

OK	**Check and replace ABS ECU.**

NG

5	Check sensor installation.

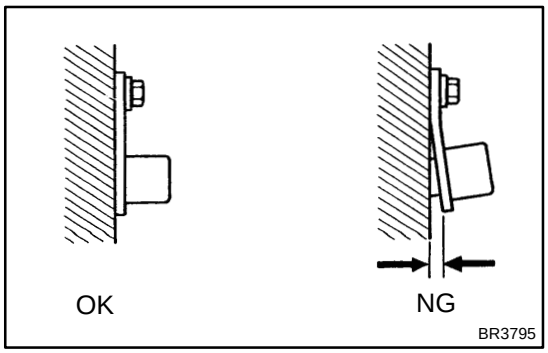

CHECK:
Check the speed sensor installation.
OK:
The installation bolt is tightened properly and there is no clearance between the sensor and the front steering knuckle/rear axle carrier.

NG	Replace speed sensor.

NOTICE:
Check the speed sensor signal last (See page DI–448).

OK

6	Check sensor rotor and sensor tip.

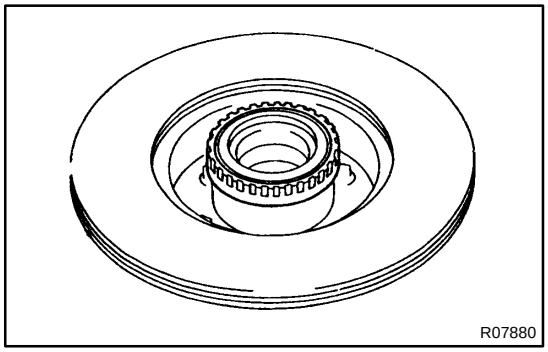

Front:
PREPARATION:
Remove the disc (See page SA–10).
CHECK:
Check the sensor rotor serrations.
OK:
No scratches, missing teeth and foreign objects.
PREPARATION:
Remove the front speed sensor (See page BR–56).
CHECK:
Check the sensor tip.
OK:
No scratches and foreign objects on the sensor tip.

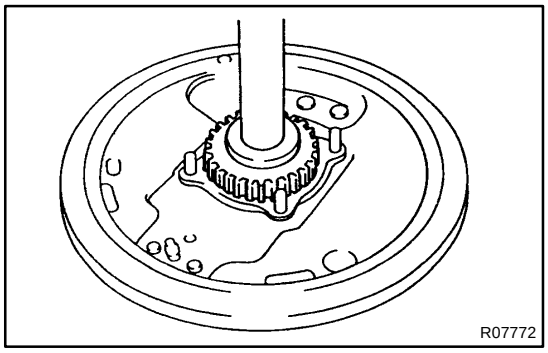

Rear:
PREPARATION:
Remove the axle shaft (See page SA–84).
CHECK:
Check the sensor rotor serrations.
OK:
No scratches, missing teeth and foreign objects.
PREPARATION:
Remove the rear speed sensor (See page BR–60).
CHECK:
Check the sensor tip.
OK:
No scratches and foreign objects on the sensor tip.

NG → **Replace speed sensor or rotor.**

NOTICE:
Check the speed sensor signal last (See page DI–448).

OK

Check and replace ABS ECU.

DI65G–03

DTC	C0226/21	ABS Solenoid Circuit

CIRCUIT DESCRIPTION

This solenoid comes on when signals are received from the ECU and controls the pressure acting on the wheel cylinders thus controlling the braking force.

DTC No.	DTC Detection Condition	Trouble Area
C0226/21	Solenoid valve signal does not match or check result	ABS actuator

Fail safe function:
If any trouble occurs in the actuator solenoid circuit, the ECU cuts off the current to the ABS solenoid relay and prohibits the ABS control and brake system from being normal.

WIRING DIAGRAM

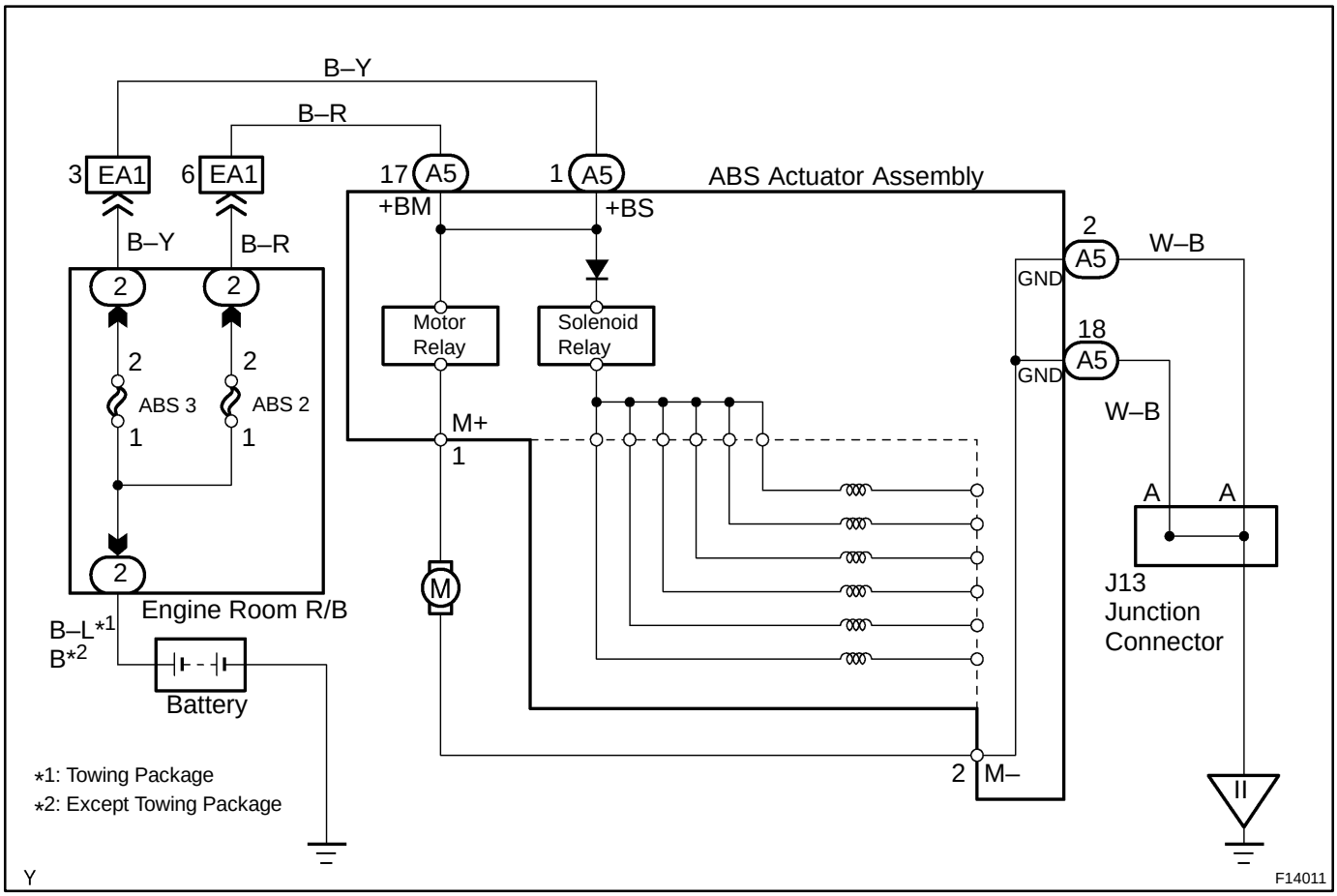

INSPECTION PROCEDURE

1	**Check DTC once more.**

PREPARATION:

(a) Clear the DTC (See page DI–448).

(b) Turn the ignition switch OFF.

CHECK:

Turn the ignition switch ON, and check that the same DTC is stored in the memory.

NO → **No problem.**

YES

Replace ABS ECU.

DI65F–06

DTC	C0278/11	ABS Motor Relay Circuit

CIRCUIT DESCRIPTION

The ABS motor relay supplies power to the ABS pump motor. While the ABS is activated, the ECU switches the motor relay on and operates the ABS pump motor.

DTC No.	DTC Detection Condition	Trouble Area
C0278/11	Detection of conditions (a) and (b): (a) When ABS motor relay is off, there is a leak. (b) When ABS motor relay is on, voltage in downstream of relay does not increase.	ABS motor relay

Fail safe function:

If any trouble occurs in the ABS motor relay circuit, the ECU cuts off the current to the ABS solenoid relay and prohibits the ABS control and brake system from being normal.

WIRING DIAGRAM

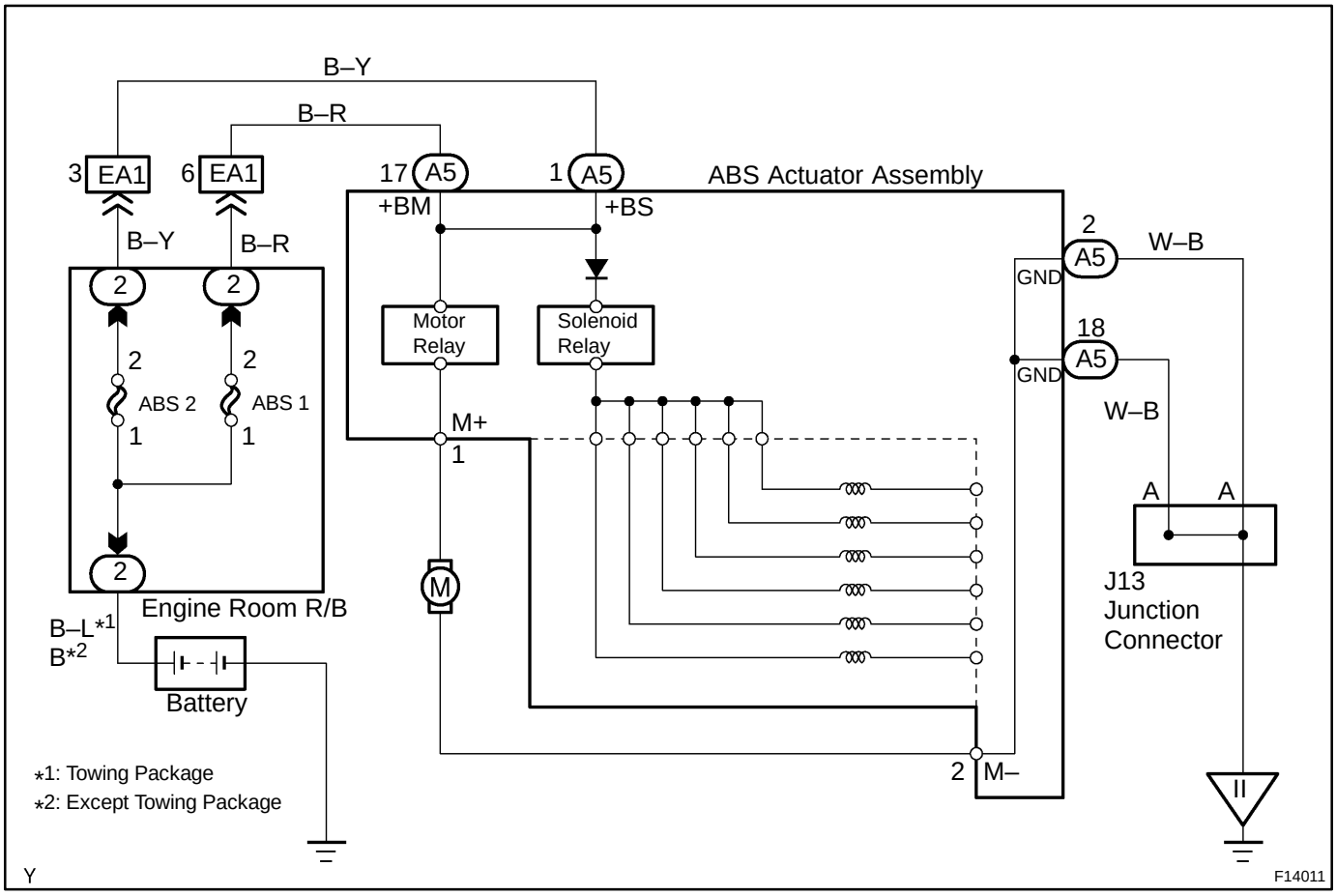

INSPECTION PROCEDURE

1	**Check voltage between terminals +BM and GND of ABS ECU connector.**

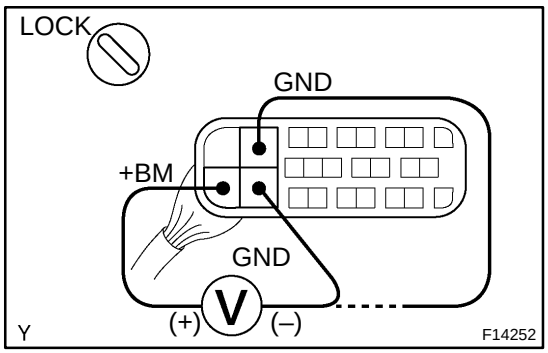

PREPARATION:

Disconnect the ABS ECU connector.

CHECK:

Measure the voltage between terminals +BM and GND of the ABS ECU harness side connector.

OK:

Voltage: 10 – 14 V

NG → **Check and replace ABS1 fuses.**
Check and repair harness or connector.

OK

If same code is still output after DTC is deleted, check contact condition of each connection. If connections are normal, ECU may be defective.

DI65E–06

DTC	C0278/11	ABS Solenoid Relay CIrcuit

CIRCUIT DESCRIPTION

This relay supplies power to each ABS solenoid. After the ignition switch is turned ON, if the initial check is OK, the relay comes on.

DTC No.	DTC Detection Condition	Trouble Area
C0278/11	Detection of conditions (a) and (b): (a) When ABS solenoid relay is off, there is a leak. (b) When ABS solenoid relay is on, voltage in downstream of relay does not increase.	ABS solenoid relay

Fail safe function:

If any trouble occurs in the ABS solenoid relay circuit, the ECU cuts off the current to the ABS solenoid relay and prohibits the ABS control and brake system from being normal.

WIRING DIAGRAM

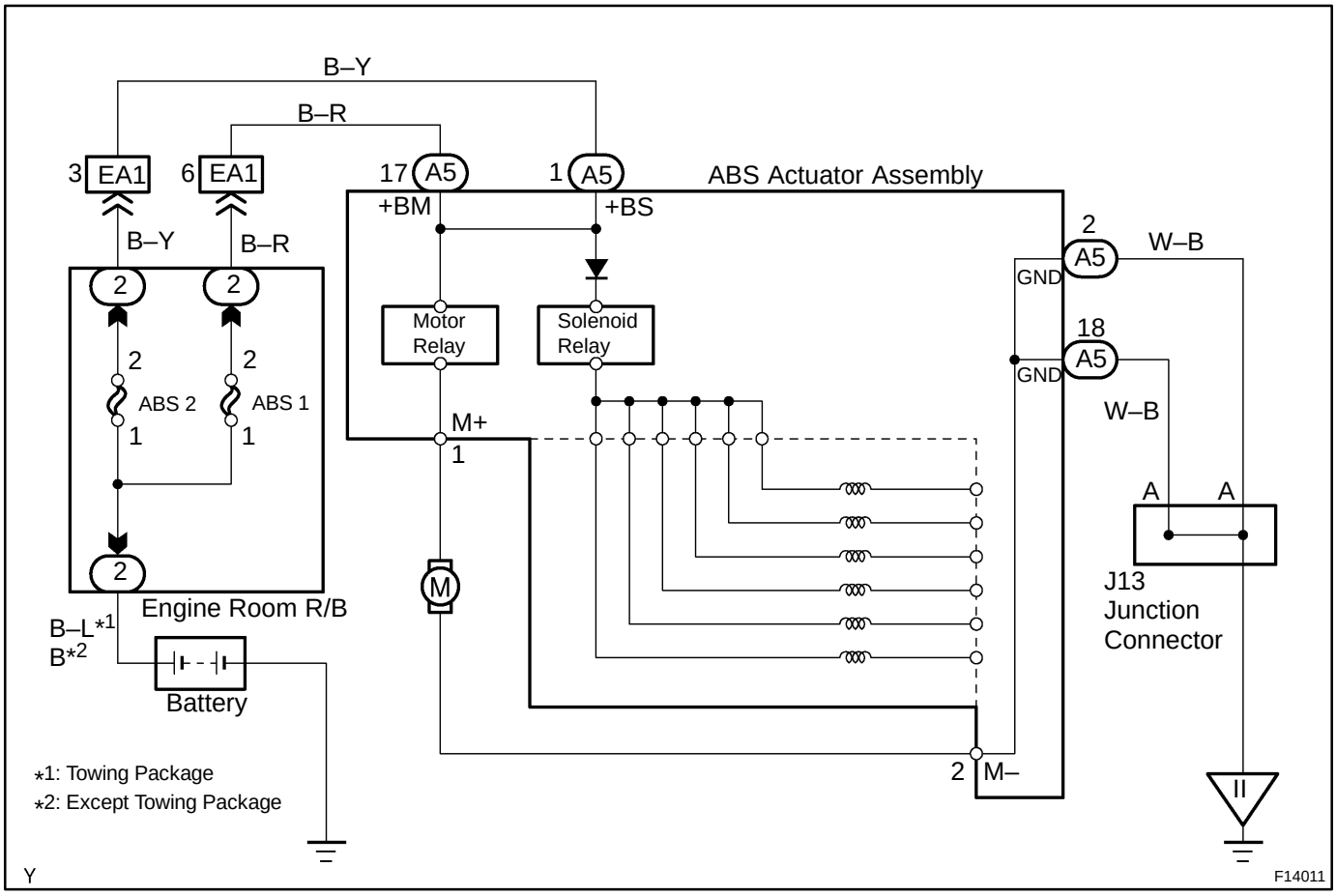

INSPECTION PROCEDURE

1	**Check voltage between terminals +BS and GND of ABS ECU connector.**

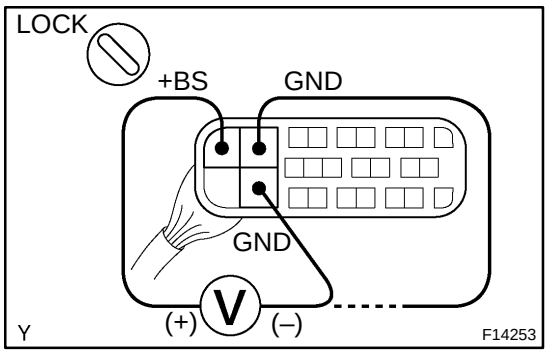

PREPARATION:

Disconnect the ABS ECU connector.

CHECK:

Measure the voltage between terminals +BS and GND of ABS ECU harness side connector.

OK:

Voltage: 10 – 14 V

NG → **Check and replace ABS2 fuses.**
Check and repair harness or connector.

OK

If same code is still output after DTC is deleted, check contact condition of each connection. If connections are normal, ECU may be defective.

DI65I–03

DTC	C1237/37	Tire Size is Different

CIRCUIT DESCRIPTION

DTC No.	DTC Detection Condition	Trouble Area
C1237/37	Detection of condition: Driving at more than 30 km/h (19 mph) for more than 60 seconds with 1 or 2 tires of different size.	Tire size

INSPECTION PROCEDURE

1	**Check tire size.**

NG → **Replace tires so that all 4 tires are same in size.**

OK

Check and replace ABS ECU.

DI65J–06

DTC	C1241/41	IG Power Source Circuit

CIRCUIT DESCRIPTION

DTC No.	DTC Detection Condition	Trouble Area
C1241/41	Detection of conditions (a) and (b): (a) The condition that the ECU terminal IG voltage is 9 to 10 V or less continues for 10 sec. or more with the vehicle driven at 3 km/h (1.9 mph) or more. (b) The condition that the ECU terminal IG voltage rises up to 16 to 17 V continues for 0.6 sec. or more while the ignition switch is ON.	▲Battery ▲Charging system ▲Power source circuit

Fail safe function:
If any trouble occurs in the power source circuit, the ECU cuts off the current to the ABS solenoid relay and prohibits the ABS control and brake system from being normal.

WIRING DIAGRAM

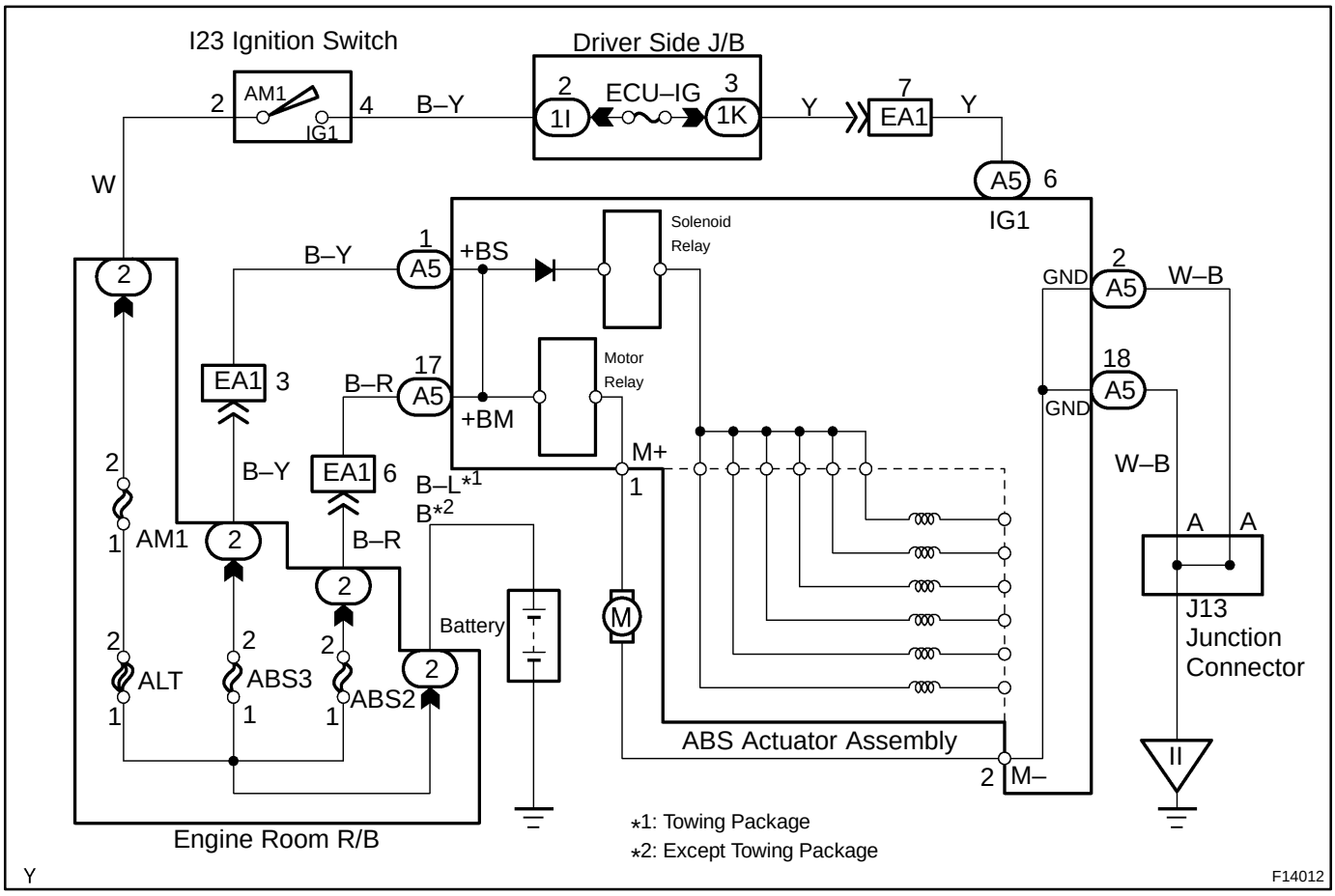

INSPECTION PROCEDURE

1	Check ECU–IG fuse.

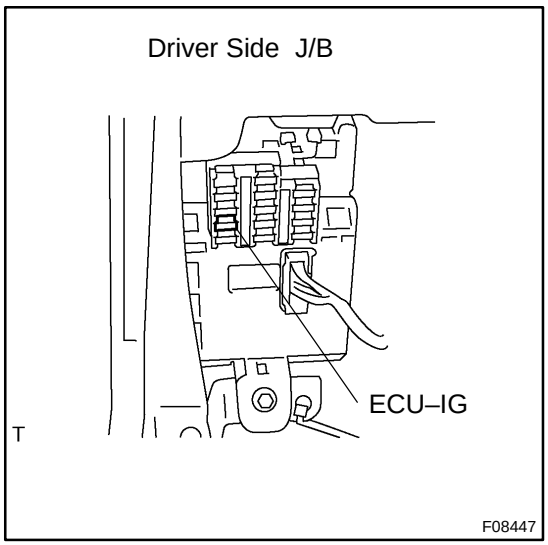

PREPARATION:
Remove ECU–IG fuse from the driver side J/B.
CHECK:
Check the continuity of ECU–IG fuse.
OK:
Continuity

NG → **Check for short circuit in all harness and components connected to ECU–IG fuse (See attached wiring diagram).**

OK

2	Check battery position voltage.

OK:
Voltage: 10 – 14 V

NG → **Check and repair charging system.**

OK

3	Check voltage of the ECU IG power source.

In case of using hand–held tester:

PREPARATION:

(a) Connect the hand–held tester to the DLC3.
(b) Turn the ignition switch ON and push the hand–held tester main switch ON.
(c) Select the DATA LIST mode on the hand–held tester.

CHECK:

Check the voltage condition output from the ECU displayed on the hand–held tester.

OK:

"Normal" is displayed.

In case of not using hand–held tester:

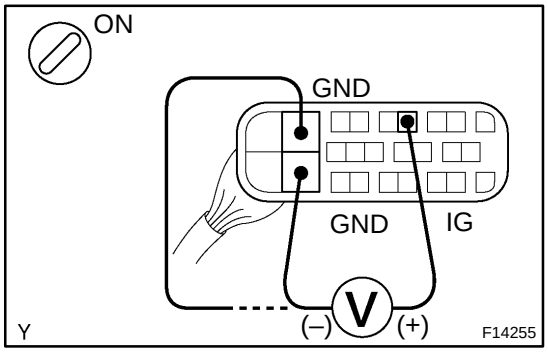

PREPARATION:

Disconnect the ABS ECU connector.

CHECK:

(a) Turn the ignition switch ON.
(b) Measure the voltage between terminals IG and GND of ABS ECU harness side connector.

OK:

Voltage: 10 – 14 V

NG → **Check or replace ABS actuator assembly.**

OK

4	Check continuity between terminal GND of ABS ECU connector and body ground.

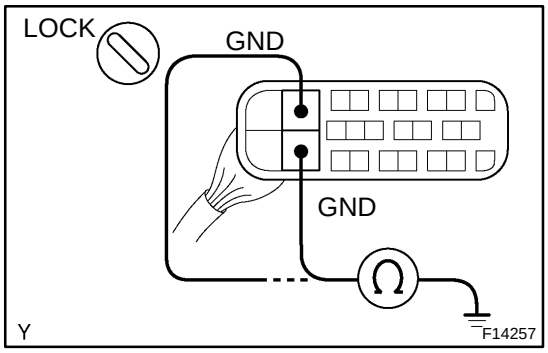

CHECK:

Measure the resistance between terminal GND of ABS ECU harness side connector and the body ground.

OK:

Resistance: 1 Ω or less

NG → **Repair or replace harness or connector.**

OK

Check for open circuit in harness and connector between ABS ECU and battery (See page IN–27).

DI8CT–02

DTC	C1244/44	Malfunction in Deceleration Sensor

CIRCUIT DESCRIPTION

DTC No.	DTC Detection Condition	Trouble Area
C1244/44	Detection of condition (a) and (b): (a) Condition of open or short in deceleration sensor is kept for 1 second. (b) When vehicle speed is 20 km/h (12 mph) or less, condition that difference between G value calculated from speed sensor and G value calculated from deceleration sensor is more than 0.5 G is kept for 1.2 seconds.	Deceleration sensor

Fail safe function:
If any trouble occurs in the deceleration sensor circuit, the ECU cuts off the current to the ABS solenoid relay and prohibits the ABS control and brake system from being normal.

INSPECTION PROCEDURE

HINT:
Start the inspection from step 1 in case of using the hand–held tester and start from step 2 in case of not using the hand–held tester.

1	**Check output value of the deceleration sensor.**

PREPARATION:

(a) Connect the hand–held tester of the DLC3.
(b) Turn the ignition switch ON and push the hand–held tester main switch ON.
(c) Select the DATA LIST mode on the hand–held tester.

CHECK:

Check that the deceleration value of deceleration sensor displayed by the hand–held tester, which changes when the vehicle is tilted.

YES → **Replace ABS ECU.**

OK →

Clear DTC.

DI65M–06

DTC	C1249/49	Stop Light Switch Circuit

CIRCUIT DESCRIPTION

DTC No.	DTC Detection Condition	Trouble Area
C1249/49	The condition that the ECU terminal STP voltage is 1.5 to 4 V continues for 0.3 sec. or more when the ignition switch is ON and stop light switch is ON.	▲Stop light switch ▲Stop light switch circuit

WIRING DIAGRAM

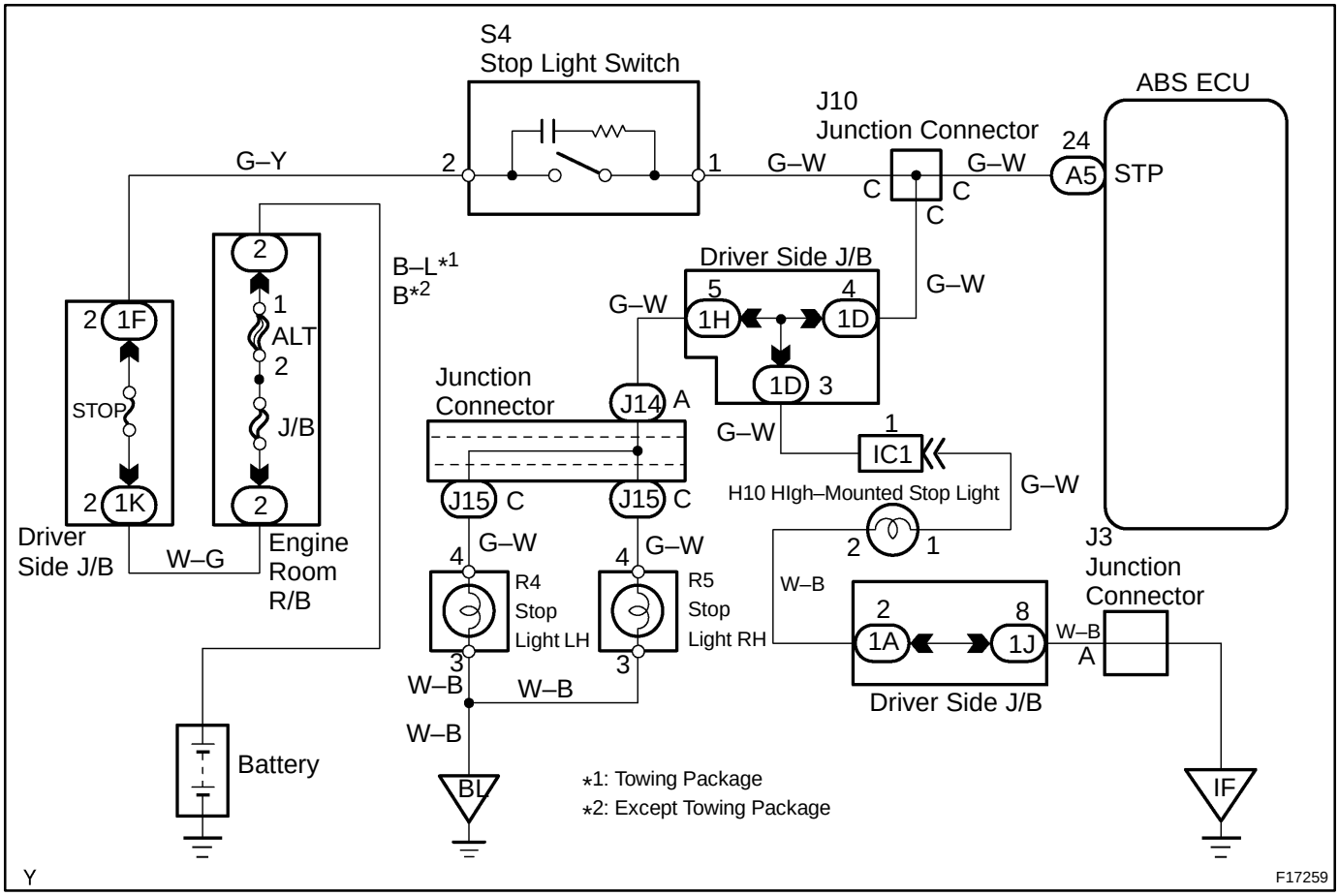

INSPECTION PROCEDURE

1	**Check operation of the stop light switch.**

CHECK:
Check that the stop light turns on when the brake pedal is depressed and turns off when the brake pedal is released.

NG → **Repair stop light circuit (See page BE–38).**

OK

2	**Check voltage between terminal STP of ABS ECU and body ground.**

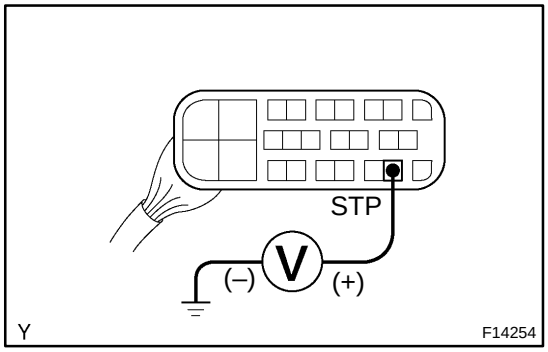

PREPARATION:
Disconnect the ABS ECU connector.
CHECK:
Measure the voltage between terminal STP of ABS ECU harness side connector and the body ground when the brake pedal is depressed.
OK:

Voltage: 8 – 14 V

OK → **Check and replace ABS ECU.**

NG

3	**Check for open circuit in harness and connector between ABS ECU and stop light switch (See page IN–27).**

NG → **Repair or replace harness or connector.**

OK

Proceed to next circuit inspection shown on problem symptoms table (See page DI–455).

DI65N–03

DTC	C1251/51	ABS Pump Motor Lock

CIRCUIT DESCRIPTION

DTC No.	DTC Detection Condition	Trouble Area
C1251/51	Pump motor does not operate during the initial check.	ABS pump motor

Fail safe function:
If any trouble occurs in the ABS pump motor, the ECU cuts off the current to the ABS solenoid relay and prohibits the ABS control and brake system from being normal.

WIRING DIAGRAM

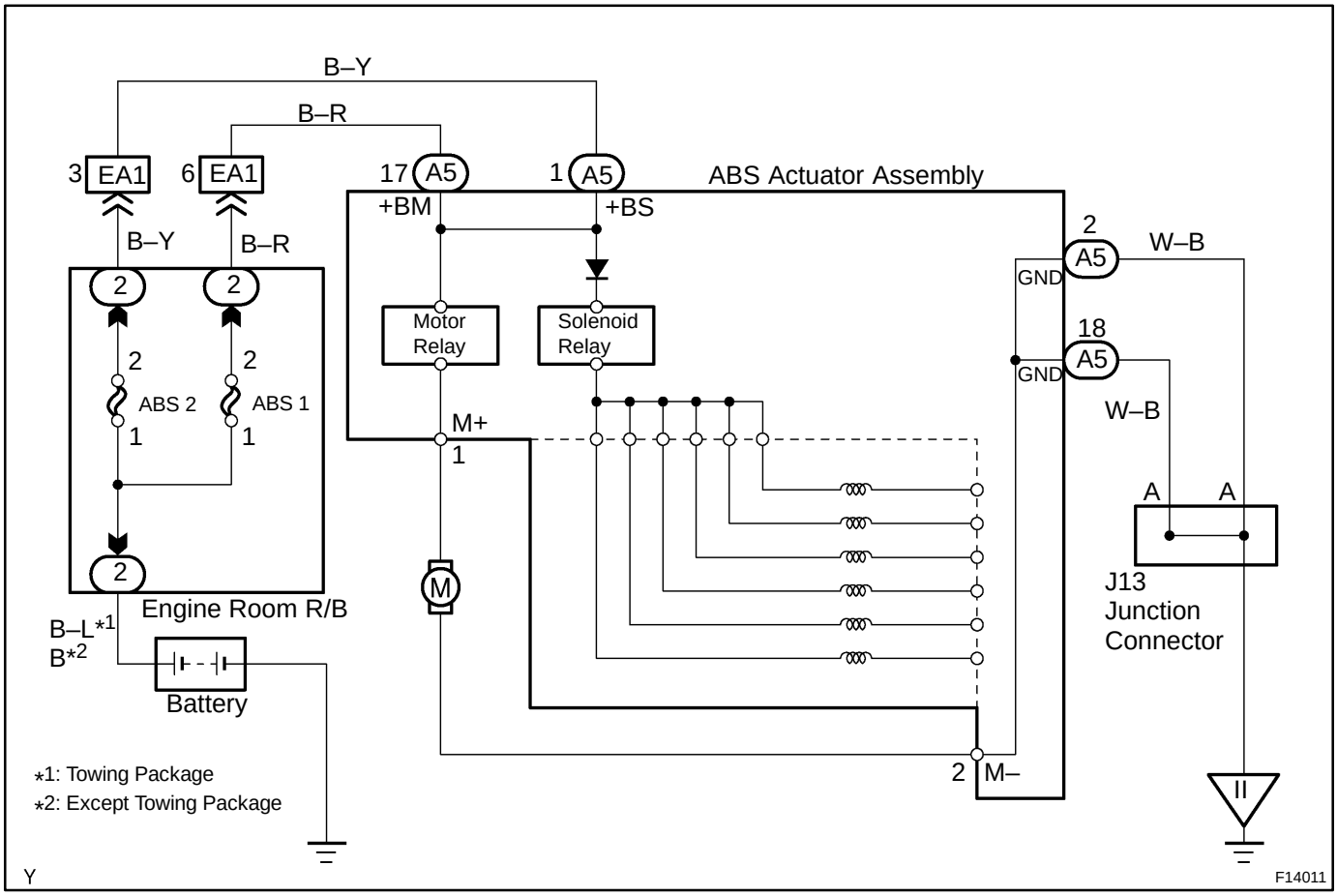

INSPECTION PROCEDURE

1	**Check operation of pump motor.**

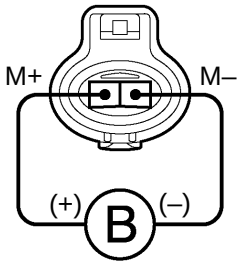

PREPARATION:
Disconnect the ABS ECU connector.
CHECK:
Connect the positive (+) lead to terminal M+ and negative (–) lead to terminal M– of the ABS ECU side connector, and check that the pump motor operates.
OK:

The running sound of the pump motor should be heard.

OK → **Check for open circuit in harness and connector between ABS actuator and ABS ECU (See page IN–27).**

NG

Replace ABS actuator.

DI65O–07

DTC	Always ON	Malfunction in ABS ECU

CIRCUIT DESCRIPTION

DTC No.	DTC Detection Condition	Trouble Area
Always ON	Detection of conditions (a) and (b): (a) There is a malfunction in the ECU internal circuit. (b) ECU power source voltage is 16 to 18 V or more.	▲Battery ▲Charging system ▲Power source circuit ▲ABS ECU

HINT:
There is a case that hand–held tester cannot be used when the ECU is abnormal.
Fail safe function:
If any trouble occurs in the ECU, the ECU cuts off the current to the ABS solenoid relay and prohibits the ABS control and brake system from being normal.

WIRING DIAGRAM

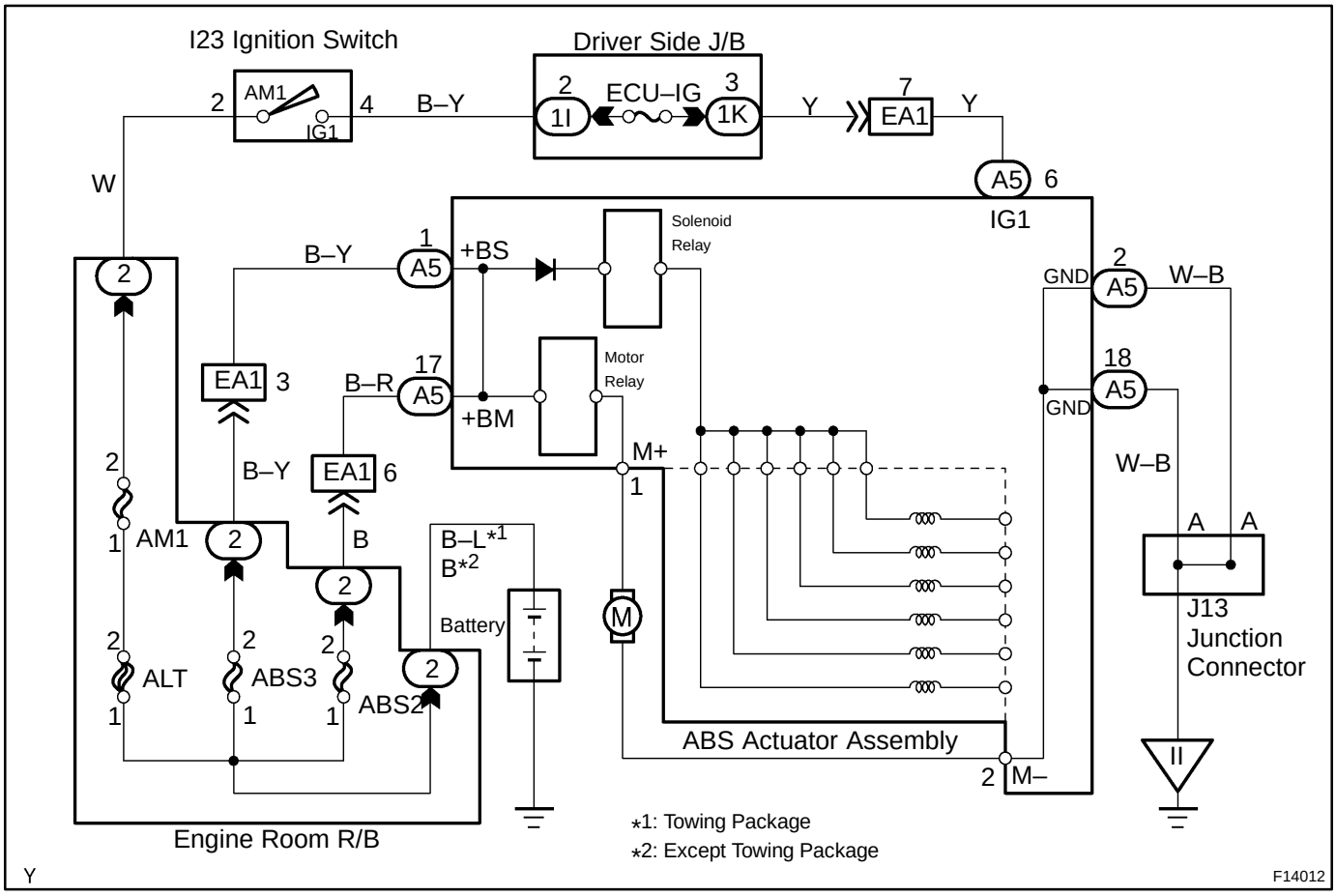

INSPECTION PROCEDURE

1	**Check that the ABS ECU connectors are securely connected to ABS ECU.**

NO → **Connect the connector to ABS ECU.**

YES

2	**Is DTC output?**

Check DTC on page DI–448.

YES → **Repair circuit indicated by output code.**

NO

3	**Check voltage between terminals IG and GND of ABS ECU connector.**

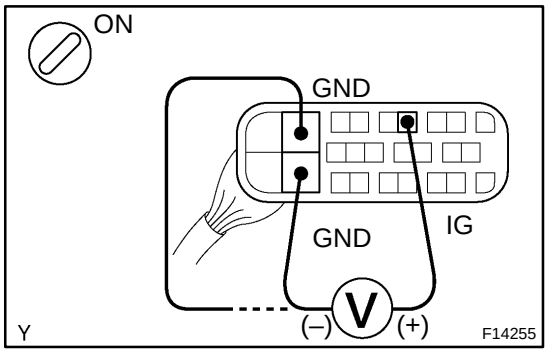

PREPARATION:
Disconnect the ABS ECU connector.
CHECK:
(a) Turn the ignition switch ON.
(b) Measure the voltage between terminals IG and GND of the ABS ECU harness side connector.
OK:
Voltage: 10 – 14 V

NG → **Check for open and short circuit in harness and connector between ECU–IG fuse and ABS ECU (See page IN–27).**

OK

4	Check combination meter.

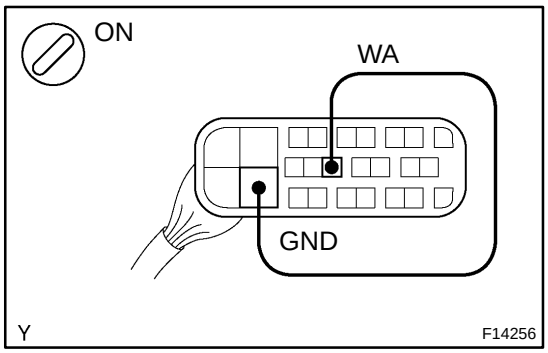

PREPARATION:
Disconnect the ABS ECU connector.
CHECK:
(a) Using a service wire, connect terminals WA and GND of the ABS ECU harness side connector.
(b) Turn the ignition switch ON.
OK:
ABS warning light comes on.

NG → **Repair or replace combination meter assembly (See page BE–46).**

OK

5	Check ABS warning light.

PREPARATION:
(a) Turn the ignition switch OFF.
(b) Disconnect the service wire from the ABS ECU.
(c) Turn the ignition switch ON.
CHECK:
Check the ABS warning light goes off.

OK → **Check and replace ABS ECU.**

NG

Check for short circuit in harness and connector between ABS warning light, DLC3 and ABS ECU (See page IN–27).

DI65P–06

ABS Warning Light Circuit

CIRCUIT DESCRIPTION

If the ECU detects a trouble, the ABS warning light comes on while the ABS control is prohibited and at the same time, the ECU records a DTC in memory.
After removing the short pin of the DLC3, connect terminals Tc and CG of the DLC3 to make the ABS warning light blink and to output the DTC.

WIRING DIAGRAM

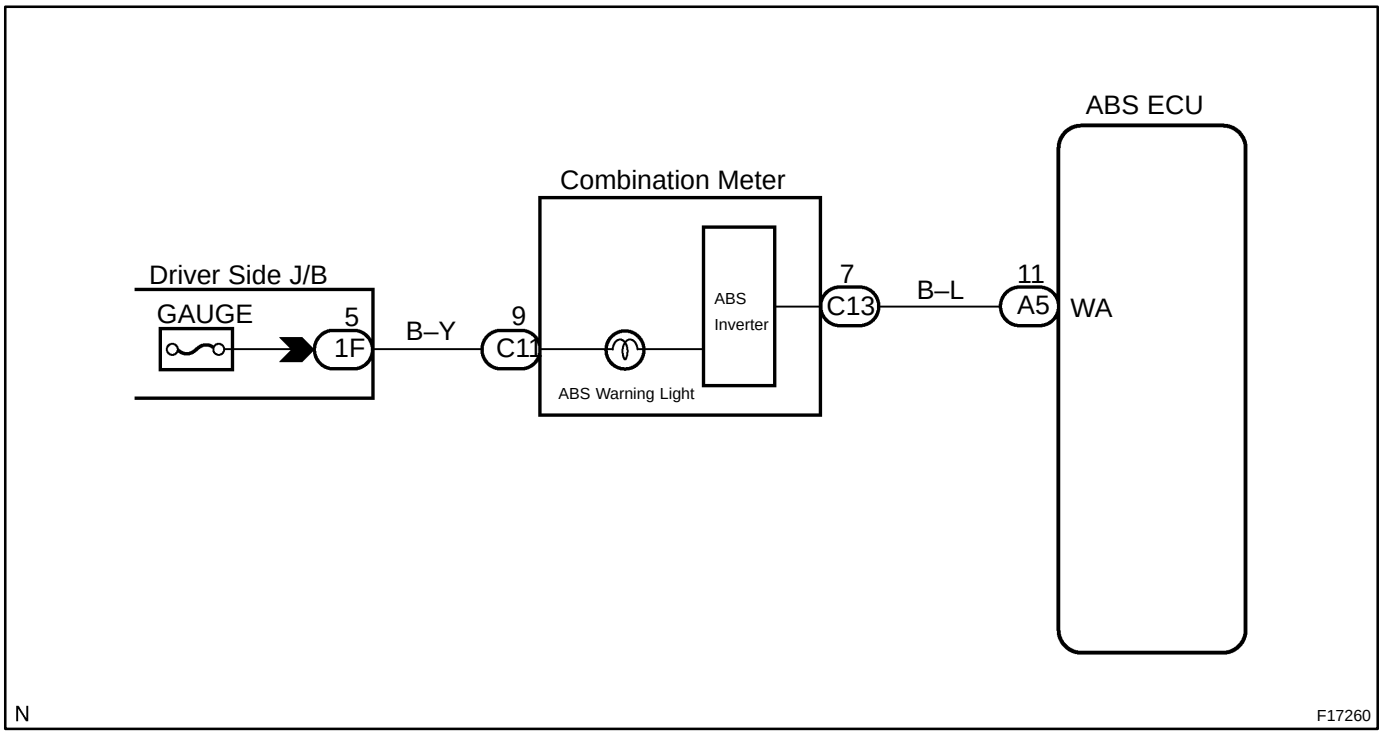

INSPECTION PROCEDURE

HINT:
Troubleshooting in accordance with the chart below for each trouble symptom.

ABS warning light does not light up	*1
ABS warning light remains on	*2

*1: Start the inspection from step 1 in case of using the hand–held tester and start from step 2 in case of not using hand–held tester.
*2: After inspection with step 3, start the inspection from step 4 in case of using the hand–held tester and start from step 5 in case of not using hand–held tester.

1	**Check operation of the ABS warning light.**

PREPARATION:

(a) Connect the hand–held tester to the DLC3.
(b) Turn the ignition switch ON and push the hand–held tester main switch ON.
(c) Select the ACTIVE TEST mode on the hand–held tester.

CHECK:

Check that ”ON” and ”OFF” of the ABS warning light can be seen on the combination meter by the hand–held tester.

OK → **Check and replace ABS ECU.**

NG

2	**Check ABS warning light.**

See the combination meter troubleshooting on page BE–46.

NG → **Replace bulb or combination meter assembly (See page BE–46).**

OK

Check for open in harness and connector between GAUGE fuse and ABS ECU (See page IN–27).

3	**Is DTC output?**

Check DTC on page DI–448.

YES → **Repair circuit indicated by code output.**

NO

4	**Check for short circuit in harness and connector between GAUGE fuse and ABS ECU (See page IN–27).**

NG → **Repair or replace harness or connector.**

OK

Check and repair ABS ECU.

DI65Q–07

Tc Terminal Circuit

CIRCUIT DESCRIPTION

Connecting terminals Tc and CG of the DLC3 causes the ECU to display the DTC by flashing the ABS warning light.

WIRING DIAGRAM

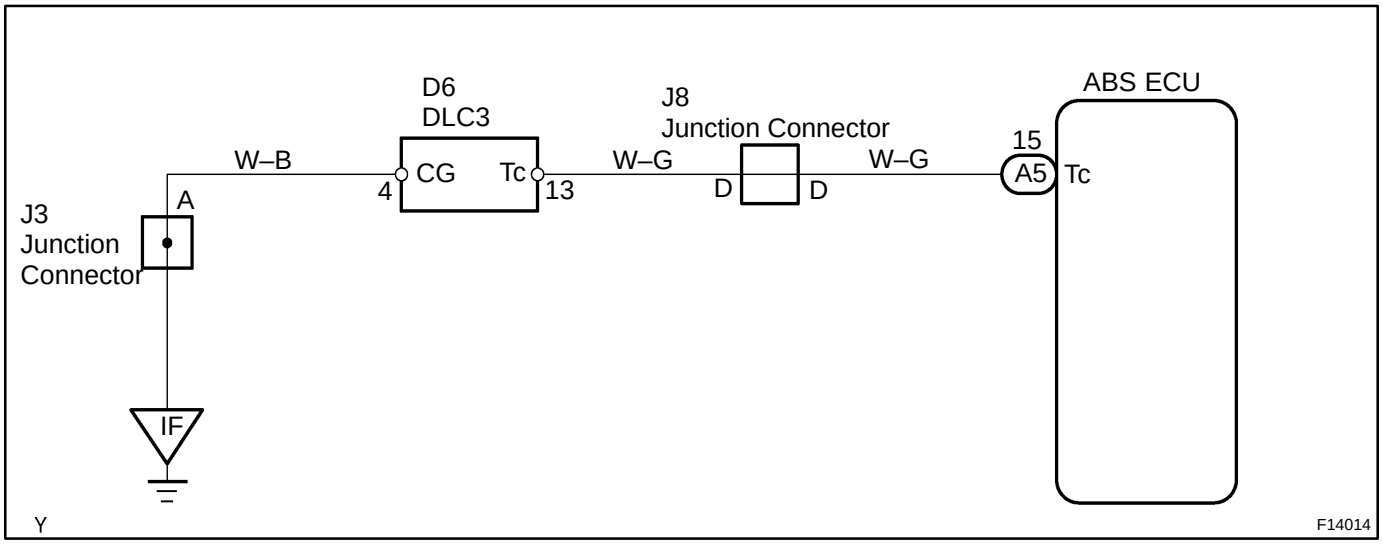

INSPECTION PROCEDURE

1	**Check voltage between terminals Tc and CG of DLC3.**

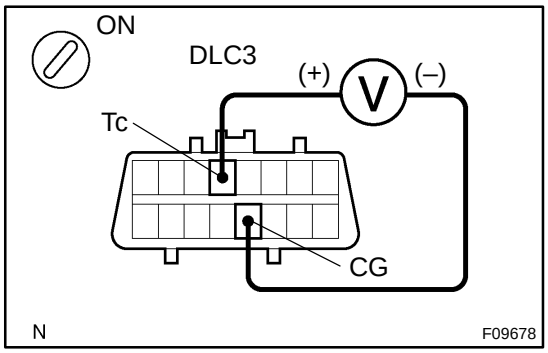

CHECK:

(a) Turn the ignition switch ON.

(b) Measure the voltage between terminals Tc and CG of the DLC3.

OK:

Voltage: 10 – 14 V

OK → **If ABS warning light does not blink even after Tc and CG are connected, ECU may be defective.**

NG

2	**Check for open and short circuit in harness and connector between ABS actuator and DLC3, DLC3 and body ground (See page IN–27).**

NG → **Repair or replace harness or connector.**

OK

Check and replace ABS ECU.

Ts Terminal Circuit

CIRCUIT DESCRIPTION

The sensor check circuit detects abnormalities in the speed sensor signal, which cannot be detected in the DTC check. Connecting terminals Ts and CG of the DLC3 in the engine compartment starts the check.

WIRING DIAGRAM

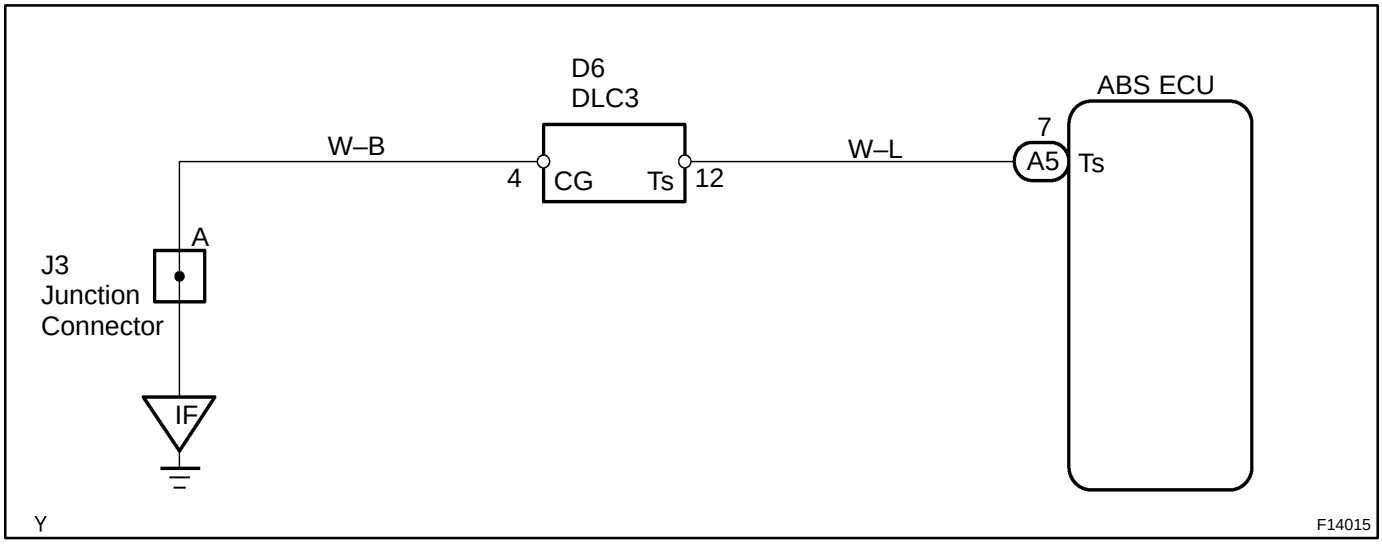

INSPECTION PROCEDURE

1	**Check voltage between terminals Ts and CG of DLC3.**

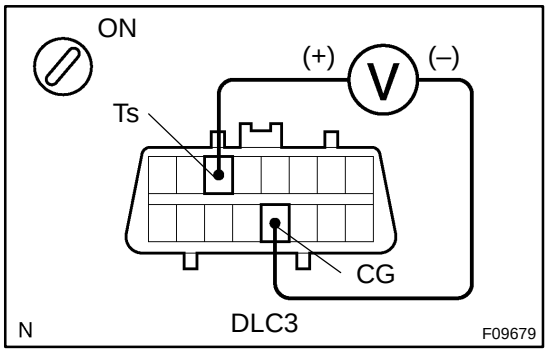

CHECK:

(a) Turn the ignition switch ON.

(b) Measure the voltage between terminals Ts and CG of DLC3.

OK:

Voltage: 10 – 14 V

OK → **If ABS warning light does not blink even after Ts and CG are connected, ECU may be defective.**

NG

2	**Check for open and short circuit in harness and connector between ABS actuator and DLC3, DLC3 and body ground (See page IN–27).**

NG → **Repair or replace harness or connector.**

OK

Check and replace ABS ECU.

DI65S–04

Check for Fluid Leakage

Check for fluid leak from the actuator or the hydraulic lines.

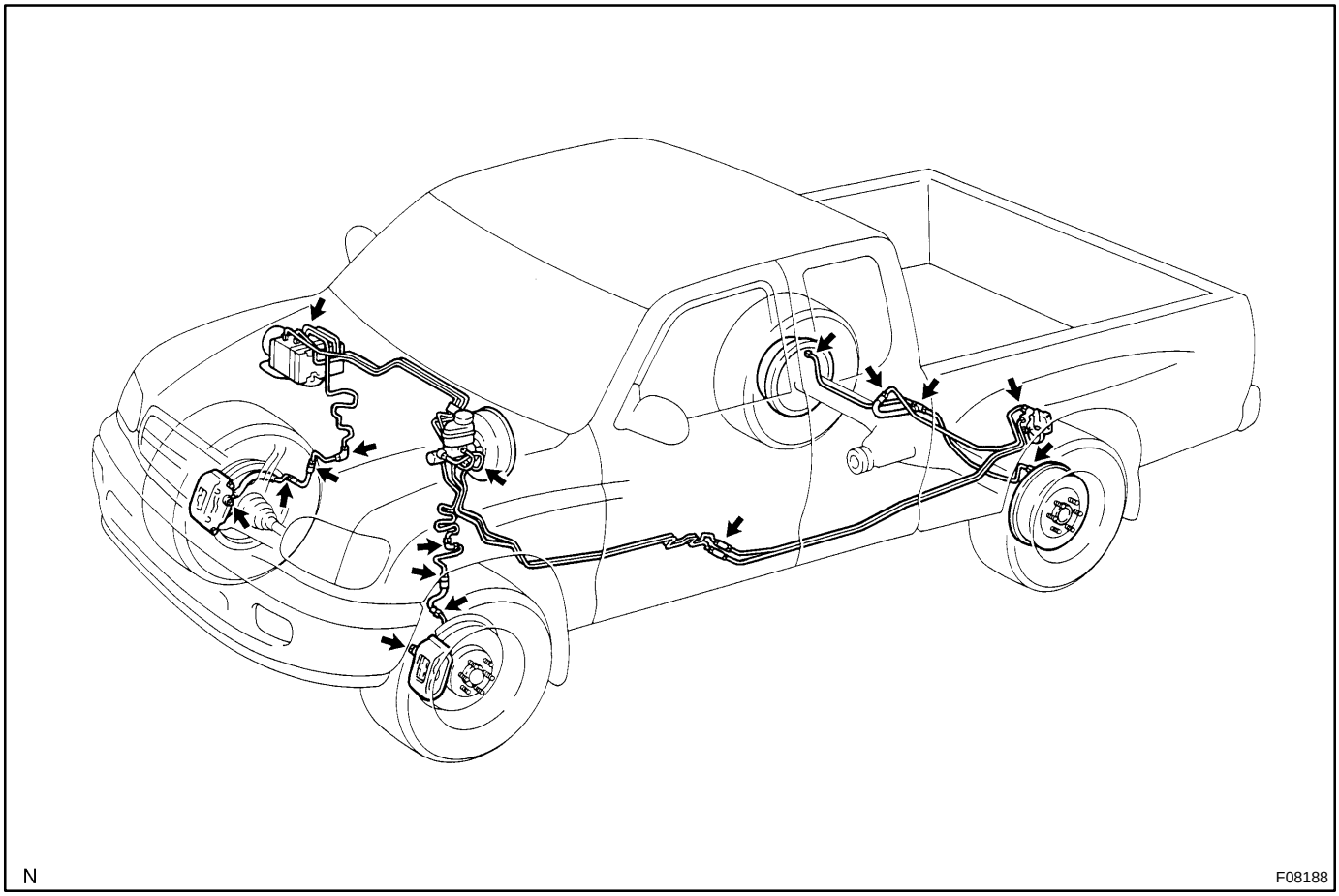

N F08188

ENGINE (2UZ–FE)

DI078–20

HOW TO PROCEED WITH TROUBLESHOOTING

Troubleshoot in accordance with the procedure on the following page.

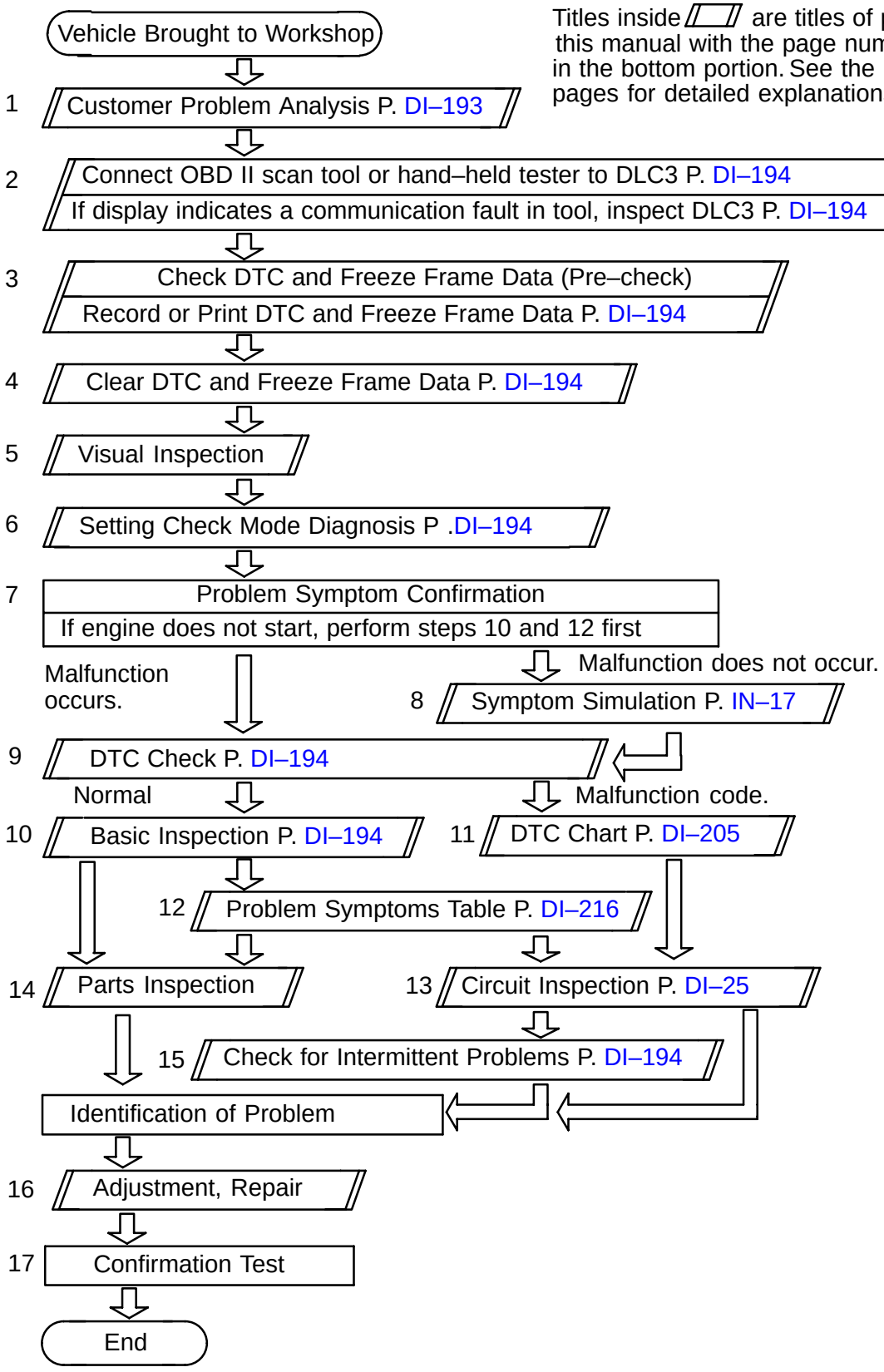

Titles inside ▱ are titles of pages in this manual with the page number indicated in the bottom portion. See the indicated pages for detailed explanations.

DI079–15

CUSTOMER PROBLEM ANALYSIS CHECK

ENGINE CONTROL SYSTEM Check Sheet

Inspector's Name

Customer's Name		Model and Model Year	
Driver's Name		Frame No.	
Date Vehicle Brought in		Engine Model	
License No.		Odometer Reading	km miles

Problem Symptoms	☐ Engine does not Start	☐ Engine does not crank ☐ No initial combustion ☐ No complete combustion
	☐ Difficult to Start	☐ Engine cranks slowly ☐ Other _____
	☐ Poor Idling	☐ Incorrect first idle ☐ Idling rpm is abnormal ☐ High (rpm) ☐ Low (rpm) ☐ Rough idling ☐ Other _____
	☐ Poor Driveability	☐ Hesitation ☐ Back fire ☐ Muffler explosion (after–fire) ☐ Surging ☐ Knocking ☐ Other _____
	☐ Engine Stall	☐ Soon after starting ☐ After accelerator pedal depressed ☐ After accelerator pedal released ☐ During A/C operation ☐ Shifting from N to D ☐ Other _____
	☐ Others	

Date Problem Occurred		
Problem Frequency		☐ Constant ☐ Sometimes (times per day/month) ☐ Once only ☐ Other _____
Condition When Problem Occurs	Weather	☐ Fine ☐ Cloudy ☐ Rainy ☐ Snowy ☐ Various/Other _____
	Outdoor Temperature	☐ Hot ☐ Warm ☐ Cool ☐ Cold (approx. ____°F/____°C)
	Place	☐ Highway ☐ Suburbs ☐ Inner city ☐ Uphill ☐ Downhill ☐ Rough road ☐ Other _____
	Engine Temperature	☐ Cold ☐ Warming up ☐ After warming up ☐ Any temperature ☐ Other _____
	Engine Operation	☐ Starting ☐ Just after starting (min.) ☐ Idling ☐ Racing ☐ Driving ☐ Constant speed ☐ Acceleration ☐ Deceleration ☐ A/C switch ON/OFF ☐ Other _____

Condition of MIL		☐ Remains on ☐ Sometimes lights up ☐ Does not light up
DTC Inspection	Normal Mode (Pre–check)	☐ Normal ☐ Malfunction code(s) (code) ☐ Freeze frame data ( )
	Check Mode	☐ Normal ☐ Malfunction code(s) (code) ☐ Freeze frame data ( )

DI1UV–08

PRE–CHECK

1. DIAGNOSIS SYSTEM

(a) Description

▲ When troubleshooting OBD II vehicles, the only difference from the usual troubleshooting procedure is that you need to connect the vehicle to the OBD II scan tool complying with SAE J1978 or the hand–held tester, and read off various data output from the vehicle's ECM.

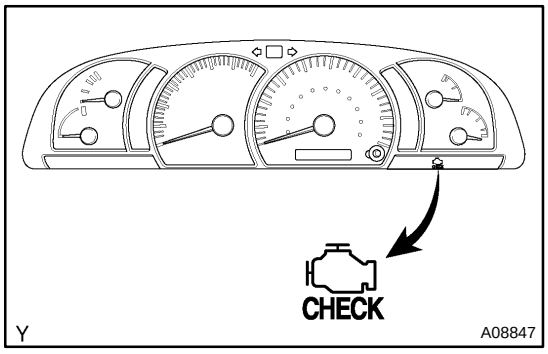

▲ OBD II regulations require that the vehicle's on–board computer lights up the Malfunction Indicator Light (MIL) on the instrument panel when the computer detects a malfunction in the emission control system/components or in the powertrain control components which affect vehicle emissions, or a malfunction in the computer. In addition to the MIL lighting up when a malfunction is detected, the applicable Diagnostic Trouble Codes (DTC) prescribed by SAE J2012 are recorded in the ECM memory (See page DI–205).

If the malfunction does not reoccur in the 3 consecutive trips, the MIL goes off automatically but the DTCs remain in the ECM memory.

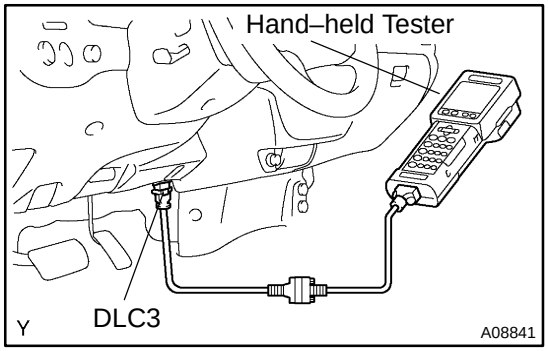

▲ To check the DTCs, connect the OBD II scan tool or hand–held tester to the Data Link Connector 3 (DLC3) of the vehicle. The OBD II scan tool or hand–held tester also enables you to erase the DTCs and check the freeze frame data and various forms of the engine data. (for operating instructions, see the OBD II scan tool's instruction book).

DTCs include SAE controlled codes and manufacturer controlled codes. SAE controlled codes must be set as prescribed by the SAE, while manufacturer controlled codes can be set freely by a manufacturer within the prescribed limits (See the DTC chart on page DI–205).

▲ The diagnosis system operates in the normal mode during normal vehicle use. It also has a check mode for technicians to simulate malfunction symptoms and troubleshoot it. Most DTCs use 2 trip detection logic* to prevent an erroneous detection, and ensure a through malfunction detection. By switching the ECM to the check mode when troubleshooting, a technician can cause the MIL to light up for a malfunction that is only detected once or momentarily. (hand–held tester only) (See step 2)

▲ *2 trip detection logic:
When a malfunction is first detected, the malfunction is temporarily stored in the ECM memory. (1st trip)

If the same malfunction is detected again during the second drive test, this second detection causes the MIL to light up. (2nd trip) (However, the ignition switch must be turned OFF between the 1st trip and 2nd trip.)

▲ Freeze frame data:
The freeze frame data records the engine conditions (fuel system, calculated load, engine coolant temperature, fuel trim, engine speed, vehicle speed, etc.) when a malfunction is detected. When troubleshooting, it is useful for determining whether the vehicle was running or stopped, the engine was warmed up or not, the air–fuel ratio was lean or rich, etc. at the time of the malfunction.

Priorities for troubleshooting:

If troubleshooting priorities for multiple DTCs are given in the applicable DTC chart, these priorities should be followed.

If no instructions are given, perform troubleshootings for those DTCs according to the following priorities.

(1) DTCs other than fuel trim malfunction (DTCs P0171 and P0172) and misfire (DTCs P0300 – P0308).
(2) Fuel trim malfunction (DTCs P0171 and P0172).
(3) Misfire (DTCs P0300 – P0308).

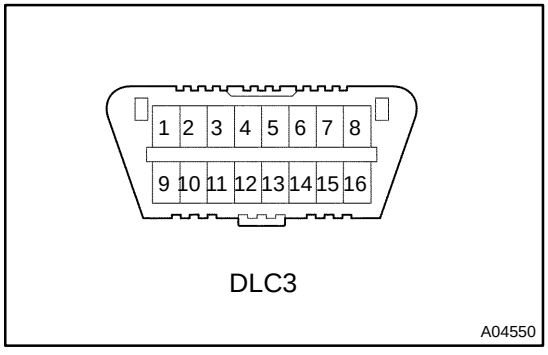

(b) Check the DLC3.
The vehicle's ECM uses the ISO 9141–2 communication protocol. The terminal arrangement of the DLC3 complies with SAE J1962 and matches the ISO 9141–2 format.

Terminal No.	Connection/Voltage or Resistance	Condition
7	Bus < Line/Pulse generation	During transmission
4	Chassis Ground – Body Ground/1 Ω or less	Always
5	Signal Ground – Body Ground/1 Ω or less	Always
16	Battery Positive – Body Ground/9 – 14 V	Always

HINT:
If the display shows UNABLE TO CONNECT TO VEHICLE when you have connected the cable of the OBD II scan tool or the hand–held tester to the DLC3, turned the ignition switch ON and operated the scan tool, there is a problem on the vehicle side or tool side.

- If the communication is normal when the tool is connected to another vehicle, inspect the DLC3 on the original vehicle.
- If the communication is still impossible when the tool is connected to another vehicle, the problem is probably in the tool itself, so consult the Service Department listed in the tool's instruction manual.

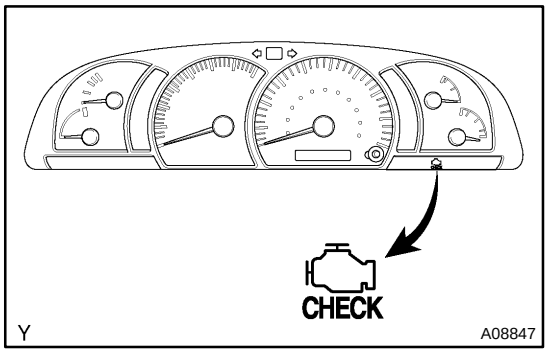

2. Normal mode:
INSPECT DIAGNOSIS

(a) Check the MIL.
(1) The MIL comes on when the ignition switch is turned ON and the engine is not running.

HINT:
If the MIL does not light up, troubleshoot the combination meter (See page BE–1).

(2) When the engine is started, the MIL should go off. If the light remains on, the diagnosis system has detected a malfunction or abnormality in the system.

(b) Check the DTC.

NOTICE:

- **If there is no DTC in the normal mode, check the 1st trip DTC using the Continuous Test Results function (Mode 7 for SAE J1979) on the OBDII scan tool or the hand–held tester.**
- **Hand–held tester only:**
  When the diagnosis system is switched from the normal mode to the check mode, all the DTCs and freeze frame data recorded in the normal mode will be erased. So before switching modes, always check the DTCs and freeze frame data, and note them down.
  (1) Prepare the OBD II scan tool (complying with SAE J1978) or the hand–held tester.
  (2) Connect the OBD II scan tool or the hand–held tester to the DLC3 at the lower left of the instrument panel.
  (3) Turn the ignition switch ON and push the OBD II scan tool or the hand–held tester switch ON.

(4) Use the OBD II scan tool or the hand–held tester to check the DTCs and freeze frame data and note them down (for operating instructions, see the OBD II scan tool's instruction book).

If there is no DTC in the normal mode, check the 1st trip DTC using the Continuous Test Results function (Mode 7 for SAE J1979) on the OBDII scan tool or the hand–held tester.

(5) See page DI–205 to confirm the details of the DTCs.

NOTICE:

- **When simulating a symptom with OBD II scan tool (excluding hand–held tester) to check the DTCs, use the normal mode. For code on the DTC chart subject to "2 trip detection logic", perform either of the following actions.**
- **Turn the ignition switch OFF after the symptom is simulated once. Then repeat the simulation process again. When the problem has been simulated twice, the MIL lights up and the DTCs are recorded in the ECM.**
- **Check the 1st trip DTC using Mode 7 (Continuous Test Results) for SAE J1979.**

(c) Clear the DTC.

The DTCs and freeze frame data will be erased by either action.

(1) Operating the OBD II scan tool (complying with SAE J1978) or the hand–held tester to erase the codes. (See the OBD II scan tool's instruction book for operating instructions.)

(2) Disconnecting the battery terminals or the EFI and ETCS fuses.

NOTICE:

If the hand–held tester switches the ECM from the normal mode to the check mode or vice–versa, or if the ignition switch is turned from ON to ACC or OFF during the check mode, the DTCs and freeze frame data will be erased.

3. Check Mode:

INSPECT DIAGNOSIS

HINT:

Hand–held tester only:

Compared to the normal mode, the check mode has an increased sensitivity to detect malfunctions.

Furthermore, the same diagnostic items which are detected in the normal mode can also be detected in the check mode.

(a) Check the DTC.

(1) Initial conditions

- Battery positive voltage 11 V or more
- Throttle valve fully closed
- Transmission in P or N position
- A/C switched OFF

(2) Turn the ignition switch OFF.
(3) Prepare the hand–held tester.
(4) Connect the hand–held tester to the DLC3 of the vehicle.
(5) Turn the ignition switch ON and push the hand–held tester switch ON.

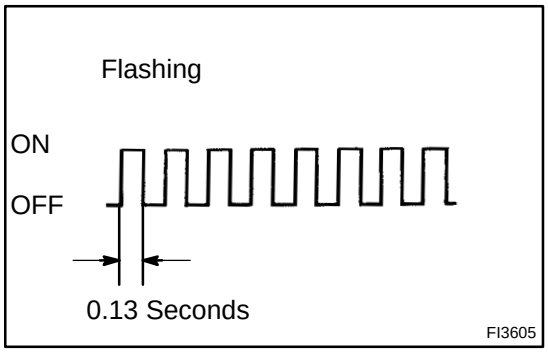

(6) Switch the hand–held tester from the normal mode to the check mode. (Check that the MIL flashes.)

NOTICE:

If the hand–held tester switches the ECM from the normal mode to the check mode or vice–versa, or if the ignition switch is turned from ON to ACC or OFF during the check mode, the DTC and freeze frame data will be erased.

(7) Start the engine (the MIL goes off after the engine starts).
(8) Simulate the conditions of the malfunction described by the customer.

NOTICE:

Leave the ignition switch ON until you have checked the DTC, etc.

(9) After simulating the malfunction conditions, use the hand–held tester diagnosis selector to check the DTCs and freeze frame data, etc.

HINT:

Be careful not to turn the ignition switch OFF. Turning the ignition switch OFF switches the diagnosis system from the check mode to the normal mode, so all the DTCs, etc. are erased.

(10) After checking the DTC, inspect the applicable circuit.

(b) Clear the DTC.
(1) The following actions will erase the DTCs and freeze frame data.
▲ Operating the hand–held tester to erase the codes. (See the hand–held tester's instruction book for operating instractions.)
▲ Disconnecting the battery terminal or EFI fuses and ETCS fuses.

4. FAIL–SAFE CHART

If any of the following codes is recorded, the ECM enters the fail–safe mode.

DTC No.	Fail–Safe Operation	Fail–Safe Deactivation Conditions
P0100 P0102 P0103	Ignition timing is fixed at 5° BTDC	Returned to normal condition
P0110 P0112 P0113	Intake air temperature is fixed at 20°C (68°F)	Returned to normal condition

P0115 P0117 P0118	Engine coolant temperature is fixed at 80˚C (176˚F)	Returned to normal condition
P0031 P0032 P0037 P0038 P0051 P0052 P0057 P0058	The heater circuit in which an abnormality is detected is turned off	Ignition switch OFF
P0325 P0330	Max. timing retardation	Ignition switch OFF
P0351 P0352 P0353 P0354 P0355 P0356 P0357 P0358	Fuel cut	Returned to normal condition

5. CHECK FOR INTERMITTENT PROBLEMS

Hand–held tester only:

By putting the vehicle's ECM in the check mode, 1 trip detection logic is possible instead of the 2 trip detection logic and the sensitivity to detect open circuits is increased. This makes it easier to detect intermittent problems.

(1) Clear the DTCs (See step 2).
(2) Set the check mode (See step 3).
(3) Perform a simulation test (See page IN–17).
(4) Check the connector and terminal (See page IN–27).
(5) Handle the connector (See page IN–27).

6. BASIC INSPECTION

When a malfunction code is not confirmed in the DTC check, troubleshooting should be performed in all the possible circuits considered as the causes of the problems. In many cases, by carrying out the basic engine check shown in the following flow chart, the location causing the problem can be found quickly and efficiently. Therefore using this check is essential in the engine troubleshooting.

1	**Is battery positive voltage 11 V or more when engine is stopped?**

NO → **Charge or replace battery.**

YES

2	**Is engine cranked?**

NO → **Proceed to pages ST–18, ST–20 and continue to troubleshoot.**

YES

3	**Does engine start?**

NO → **Go to step 7.**

YES

4	**Check air filter.**

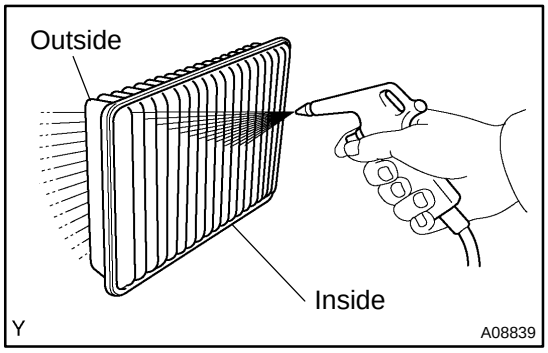

PREPARATION:
Remove the air filter.
CHECK:
Visually check that the air filter is not dirty or excessive oily.
HINT:
If necessary, clean the air filter with compressed air. First blow from inside thoroughly, then blow from outside of the air filter.

NG → **Repair or replace.**

OK

5	**Check idle speed.**

PREPARATION:
(a) Warm up the engine to the normal operating temperature.
(b) Switch off all the accessories.
(c) Switch off the A/C.
(d) Shift the transmission into the N position.
(e) Connect the OBD II scan tool or hand–held tester to the DLC3 of the vehicle.

CHECK:
Use the CURRENT DATA to check the idle speed.

OK:
Idle speed: 650 – 750 rpm

NG → **Proceed to problem symptoms table on page DI–216.**

OK

6	Check ignition timing.

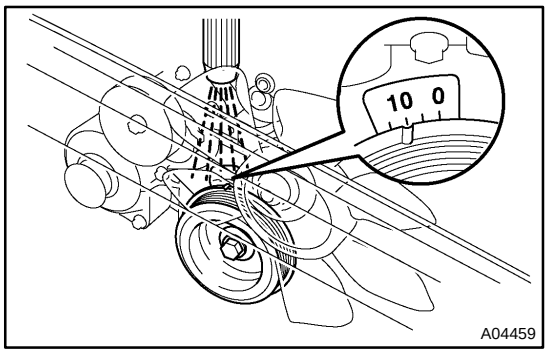

PREPARATION:

(a) Warm up the engine to the normal operating temperature.
(b) Shift the transmission into the N position.
(c) Keep the engine speed at idle.
(d) Using SST, connect terminals TC and CG of the DLC3.
SST 09843–18040
(e) Using a timing light, connect the tester to the ignition coil connector wire (See page EM–9).

CHECK:

Check the ignition timing.

OK:

Ignition timing: 10˚ BTDC at idle

NG → **Proceed to page IG–1 and continue to trouble-shoot.**

OK

Proceed to problem symptoms table on page DI–216.

7	Check fuel pressure.

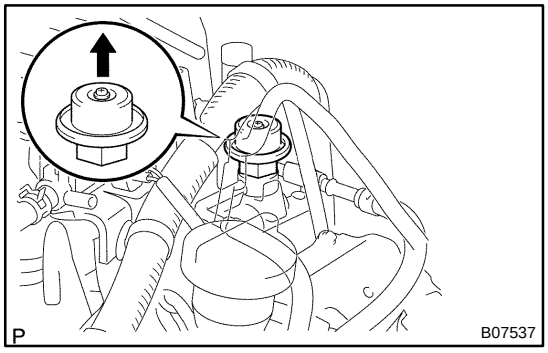

PREPARATION:

(a) Be sure that enough fuel is in the tank.
(b) Connect the hand–held tester to the DLC3.
(c) Turn the ignition switch ON and push the hand–held tester main switch ON.
(d) Use the ACTIVE TEST mode to operate the fuel pump.
(e) Please refer to the hand–held tester operator's manual for further details.
(f) If you have no hand–held tester, connect the positive (+) and negative (–) leads from the battery to the fuel pump connector (See page SF–7).

CHECK:

Check that the pulsation damper screw rises up when the fuel pump operates.
HINT:
At this time, you will hear the fuel flowing noise.

NG → **Proceed to page SF–7 and continue to trouble-shoot.**

OK

8	Check for spark.

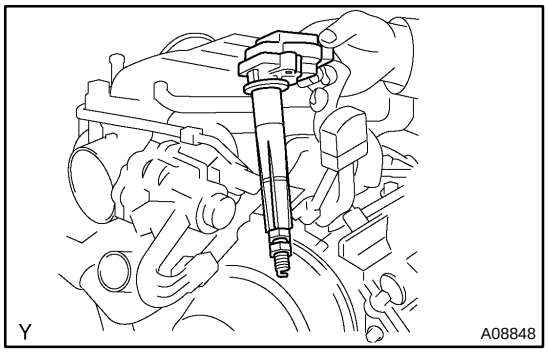

PREPARATION:

(a) Remove the ignition coil from the spark plug.
(b) Remove the spark plug.
(c) Install the spark plug to the ignition coil.
(d) Disconnect the injector connector.
(e) Ground the spark plug.

CHECK:

Check if spark occurs while the engine is being cranked.

NOTICE:

To prevent excess fuel from being injected from the injectors during this test, don't crank the engine for more than 5 – 10 seconds at a time.

NG → **Proceed to page IG–1, and continue to troubleshoot.**

OK

Proceed to problem symptoms table on page DI–216.

7. ENGINE OPERATING CONDITION

NOTICE:

The values given below for "Normal Condition" are representative values. So, a vehicle may still be normal even if its value differs from those listed here. So, do not solely depend on the "Normal Condition" here when deciding whether a part is faulty or not.

(a) CARB mandated signals.

Hand–held Tester Display	Measurement Item	Normal Condition*
FUEL SYS #1	Fuel System Bank 1 OPEN: Air–fuel ratio feedback stopped CLOSED: Air–fuel ratio feedback operating	Idling after warming up: CLOSED
FUEL SYS #2	Fuel System Bank 2 OPEN: Air–fuel ratio feedback stopped CLOSED: Air–fuel ratio feedback operating	Idling after warming up: CLOSED
CALC LOAD	Calculated Load: Current intake air volume as a proportion of max. intake air volume	Idling: 12.0 – 18.0 % Racing without load (2,500rpm): 11.0 – 17.0 %
COOLANT TEMP	Engine Coolant Temp. Sensor Value	After warming up: 80 – 95°C (176 – 203°F)
SHORT FT #1	Short–term Fuel Trim Bank 1	0 ± 20 %
LONG FT #1	Long–term Fuel Trim Bank 1	0 ± 20 %
SHORT FT #2	Short–term Fuel Trim Bank 2	0 ± 20 %

LONG FT #2	Long–term Fuel Trim Bank 2	0 ± 20 %
ENGINE SPD	Engine Speed	Idling: 650 – 750 rpm
VEHICLE SPD	Vehicle Speed	Vehicle stopped: 0 km/h (0 mph)
IGN ADVANCE	Ignition Advance: Ignition Timing of Cylinder No.1	Idling: BTDC 5 – 15°
INTAKE AIR	Intake Air Temp. Sensor Value	Equivalent to ambient temp.
MAF	Air Flow Rate Through Mass Air Flow Meter	Idling: 4.5 – 5.5 gm/sec. Racing without load (2,500 rpm): 13.0 – 20.0 gm/sec.
THROTTLE POS	Output Voltage of Throttle Position Sensor Calculated as a percentage: 0 V → 0 %, 5 V → 100 %	Throttle fully closed: 8 – 20 % Throttle fully open: 64 – 96 %
O2S B1 S1	Output Voltage of Oxygen Sensor Bank 1 Sensor 1	Idling: 0.1 – 0.9 V
O2S B1 S2	Output Voltage of Oxygen Sensor Bank 1 Sensor 2	Driving (50 km/h, 31 mph): 0.1 – 0.9 V
O2S B2 S1	Output Voltage of Oxygen Sensor Bank 2 Sensor 1	Idling: 0.1 – 0.9 V
O2S B2 S2	Output Voltage of Oxygen Sensor Bank 2 Sensor 2	Driving (50 km/h, 31 mph): 0.1 – 0.9 V
O2FT B1 S1	Oxygen Sensor Fuel Trim Bank 1 Sensor 1 (Same as SHORT FT #1)	0 ± 20 %
O2FT B2 S1	Oxygen Sensor Fuel Trim Bank 2 Sensor 1 (Same as SHORT FT #2)	0 ± 20 %

*: If no conditions are specifically stated for ”Idling”, it means the shift lever is at the N or P position, the A/C switch is OFF and all the accessory switches are OFF.

(b) TOYOTA Enhanced Signals.

Hand–held Tester Display	Measurement Item	Normal Condition*
MISFIRE RPM	Engine RPM for first misfire range	Misfire 0: 0 rpm
MISFIRE LOAD	Engine load for first misfire range	Misfire 0: 0 g/r
INJECTOR	Fuel injection time for cylinder No.1	Idling: 2.1 – 3.9 ms
STARTER SIG	Starter Signal	Cranking: ON
A/C SIG	A/C Switch Signal	A/C ON: ON
PNP SW	Park/Neutral Position Switch Signal	P or N position: ON
CTP	Closed Throttle Position	Throttle fully closed: ON
STOP LIGHT SW	Stop Light Switch Signal	Stop light switch: ON
FC IDL	Fuel Cut Idle: Fuel cut when throttle valve fully closed, during deceleration	Fuel cut operating: ON
FC TAU	Fuel Cut TAU: Fuel cut during very light load	Fuel cut operating: ON
CYL#1 – CYL#8	Abnormal revolution variation of each cylinder	0 %
IGNITION	Total number of ignitions for every 1,000 revolutions	0 – 800
FUEL PUMP	Fuel Pump Signal	Idling: ON
EVAP (PURGE) VSV	EVAP VSV Signal	VSV operating: ON
VAPOR PRESS VSV	Vapor Pressure VSV Signal	VSV operating: ON
THROTTLE POS #2	Throttle position sensor No.2 output voltage	Throttle fully closed: 2.0 – 2.9 V Throttle fully open: 4.7 – 5.1 V
ACCEL POS	Accelerator pedal position sensor No.1 output voltage	Accelerator pedal released: 0.3 – 0.9 V Accelerator pedal depressed: 3.2 – 4.8 V

ACCEL POS #2	Accelerator pedal position sensor No.2 output voltage	Accelerator pedal released: 1.8 – 2.7 V Accelerator pedal depressed: 4.7 – 5.1 V
THROTTLE TARGET POS	Target position of throttle valve	Idling: 0.4 – 1.1 V
THROTTLE OPEN DUTY	Throttle motor opening duty ratio	Throttle fully closed: 0 % When accelerator pedal is depressed, duty ratio is increased
THROTTLE CLOSE DUTY	Throttle motor closed duty ratio	Throttle fully closed: 0 % When accelerator pedal is released quickly, duty ratio is increased
THROTTLE MOTOR CTL	Whether or not throttle motor control is permitted	Idling: ON
THROTTLE CLUTCH CTL	Whether or not magnetic clutch control is permitted	Idling: ON
+BM	Whether or not electric throttle control system power is input	Idling: ON
ACCEL IDL	Whether or not accelerator pedal position sensor is detecting idle	Idling: ON
THROTTLE IDL	Whether or not throttle position sensor is detecting idle	Idling: ON
FAIL #1	Whether or not fail safe function is executed	ETCS has failed: ON
FAIL #2	Whether or not fail safe function is executed	ETCS has failed: ON
THROTTLE LEAN VALUE	Throttle fully closed learning value	0.4 – 0.8 V
ACCEL LEAN VALUE	Accelerator fully closed learning value	0.4 – 0.8 V
THROTTLE MOTOR	Throttle motor control current	Idling: 0 – 3.0 A
TOTAL FT B1	Total Fuel Trim Bank 1: Average value for fuel trim system of bank 1	Idling: 0.5 – 1.4
TOTAL FT B2	Total Fuel Trim Bank 2: Average value for fuel trim system of bank 2	Idling: 0.5 – 1.4
O2 LR B1 S1	Oxygen Sensor Lean Rich Bank 1 Sensor 1: Response time of oxygen sensor output to switch from lean to rich	Idling after warming up: 0 – 1,000 msec.
O2 LR B2 S1	Oxygen Sensor Lean Rich Bank 2 Sensor 1: Response time of oxygen sensor output to switch from lean to rich	Idling after warming up: 0 – 1,000 msec.
O2 RL B1 S1	Oxygen Sensor Rich Lean Bank 1 Sensor 1: Response time of oxygen sensor output to switch from rich to lean	Idling after warming up: 0 – 1,000 msec.
O2 RL B2 S1	Oxygen Sensor Rich Lean Bank 1 Sensor 1: Response time of oxygen sensor output to switch from rich to lean	Idling after warming up: 0 – 1,000 msec.

*: If no conditions are specifically stated for ”ldling”, it means the shift lever is at the N or P position, the A/C switch is OFF and all the accessory switches are OFF.

DI1L4–16

DIAGNOSTIC TROUBLE CODE CHART

HINT:

Parameters listed in the chart may not be exactly the same as your reading due to the type of instrument or other factors.

If a malfunction code is displayed during the DTC check in the check mode, check the circuit for the listed in the table below. For details of each code, refer to the ''See page'' under the respective ''DTC No.'' in the DTC chart.

DTC No. (See page)	Detection Item	Trouble Area	MIL*1	Memory
P0031 (DI–217)	Oxygen Sensor Heater Control Circuit Low (Bank 1 Sensor 1)	▲Open in heater circuit of heated oxygen sensor ▲Heated oxygen sensor heater ▲ECM	◀	◀
P0032 (DI–217)	Oxygen Sensor Heater Control Circuit High (Bank 1 Sensor 1)	▲Short in heater circuit of heated oxygen sensor ▲Heated oxygen sensor heater ▲ECM	◀	◀
P0037 (DI–217)	Oxygen Sensor Heater Control Circuit Low (Bank 1 Sensor 2)	▲Open in heater circuit of heated oxygen sensor ▲Heated oxygen sensor heater ▲ECM	◀	◀
P0038 (DI–217)	Oxygen Sensor Heater Control Circuit High (Bank 1 Sensor 2)	▲Short in heater circuit of heated oxygen sensor ▲Heated oxygen sensor heater ▲ECM	◀	◀
P0051 (DI–217)	Oxygen Sensor Heater Control Circuit Low (Bank 2 Sensor 1)	▲Open in heater circuit of heated oxygen sensor ▲Heated oxygen sensor heater ▲ECM	◀	◀
P0052 (DI–217)	Oxygen Sensor Heater Control Circuit High (Bank 2 Sensor 1)	▲Short in heater circuit of heated oxygen sensor ▲Heated oxygen sensor heater ▲ECM	◀	◀
P0057 (DI–217)	Oxygen Sensor Heater Control Circuit Low (Bank 2 Sensor 2)	▲Open in heater circuit of heated oxygen sensor ▲Heated oxygen sensor heater ▲ECM	◀	◀
P0058 (DI–217)	Oxygen Sensor Heater Control Circuit High (Bank 2 Sensor 2)	▲Short in heater circuit of heated oxygen sensor ▲Heated oxygen sensor heater ▲ECM	◀	◀
P0100 (DI–220)	Mass or Volume Air Flow Circuit	▲Open or short in mass air flow meter circuit ▲Mass air flow meter ▲ECM	◀	◀
P0101 (DI–224)	Mass or Volume Air Flow Circuit Range/Performance Problem	▲Mass air flow meter	◀	◀
P0102 (DI–220)	Mass or Volume Air Flow Circuit Low Input	▲Open in mass air flow meter circuit ▲Short in ground circuit ▲Mass air flow meter ▲ECM	◀	◀
P0103 (DI–220)	Mass or Volume Air Flow Circuit High Input	▲Short in mass air flow meter circuit (+B circuit) ▲Mass air flow meter ▲ECM	◀	◀
P0110 (DI–225)	Intake Air Temperature Circuit	▲Open or short in intake air temp. sensor circuit ▲Intake air temp. sensor (built in mass air flow meter) ▲ECM	◀	◀
P0112 (DI–225)	Intake Air Temperature Circuit Low Input	▲Short in intake air temp. sensor circuit ▲Intake air temp. sensor (built in mass air flow meter) ▲ECM	◀	◀

P0113 (DI–225)	Intake Air Temperature Circuit High Input	▲Open in intake air temp. sensor circuit ▲Intake air temp. sensor (built in mass air flow meter) ▲ECM	◀	◀
P0115 (DI–229)	Engine Coolant Temperature Circuit	▲Open or short in engine coolant temp. sensor circuit ▲Engine coolant temp. sensor ▲ECM	◀	◀
P0116 (DI–233)	Engine Coolant Temperature Circuit Range/Performance Problem	▲Cooling system ▲Engine coolant temp. sensor	◀	◀
P0117 (DI–229)	Engine Coolant Temperature Circuit Low Input	▲Short in engine coolant temp. sensor circuit ▲Engine coolant temp. sensor ▲ECM	◀	◀
P0118 (DI–229)	Engine Coolant Temperature Circuit High Input	▲Open in engine coolant temp. sensor circuit ▲Engine coolant temp. sensor ▲ECM	◀	◀
P0120 (DI–235)	Throttle Pedal Position Sensor/ Switch ”A” Circuit	▲Open or short in throttle position sensor circuit ▲Throttle position sensor ▲ECM	◀	◀
P0121 (DI–244)	Throttle Pedal Position Sensor/ Switch ”A” Circuit Range/Performance Problem	▲Throttle position sensor	◀	◀
P0122 (DI–235)	Throttle/Pedal Position Sensor/ Switch ”A” Circuit Low Input	▲Short in throttle position sensor circuit (ground circuit) ▲Throttle position sensor ▲ECM	◀	◀
P0123 (DI–235)	Throttle/Pedal Position Sensor/ Switch ”A” Circuit High Input	▲Open in throttle position sensor circuit ▲Short in +B circuit ▲Throttle position sensor ▲ECM	◀	◀
P0125 (DI–233)	Insufficient Coolant Temperature for Closed Loop Fuel Control	▲Cooling system ▲Engine coolant temp. sensor	◀	◀
P0128 (DI–245)	Coolant Thermostat (Coolant Temperature Below Thermostat Regulating Temperature)	▲Thermostat ▲Cooling system ▲Engine coolant temp. sensor ▲ECM	¿	¿
P0130 (DI–246)	Oxygen Sensor Circuit (Bank 1 Sensor 1)	▲Open or short in heated oxygen sensor circuit ▲Heated oxygen sensor	◀	◀
P0133 (DI–252)	Oxygen Sensor Circuit Slow Response (Bank 1 Sensor 1)	▲Open or short in oxygen sensor circuit ▲Oxygen sensor ▲Air induction system ▲Fuel pressure ▲Injector ▲ECM	◀	◀
P0134 (DI–255)	Oxygen Sensor Circuit No Activity Detected (Bank 1 Sensor 1)	▲Open or short in oxygen sensor circuit ▲Oxygen sensor ▲Air induction system ▲Fuel pressure ▲Injector ▲ECM	◀	◀
P0136 (DI–259)	Oxygen Sensor Malfunction (Bank 1 Sensor 2)	▲Open or short in heated oxygen sensor circuit ▲Heated oxygen sensor	◀	◀
P0150 (DI–246)	Oxygen Sensor Circuit (Bank 2 Sensor 1)	▲Open or short in heated oxygen sensor circuit ▲Heated oxygen sensor	◀	◀

P0153 (DI–252)	Oxygen Sensor Circuit Slow Response (Bank 2 Sensor 1)	▲Open or short in oxygen sensor circuit ▲Oxygen sensor ▲Air induction system ▲Fuel pressure ▲Injector ▲ECM	◀	◀
P0154 (DI–255)	Oxygen Sensor Circuit No Activity Detected (Bank 2 Sensor 1)	▲Open or short in oxygen sensor circuit ▲Oxygen sensor ▲Air induction system ▲Fuel pressure ▲Injector ▲ECM	◀	◀
P0156 (DI–259)	Oxygen Sensor Malfunction (Bank 2 Sensor 2)	▲Open or short in heated oxygen sensor circuit ▲Heated oxygen sensor	◀	◀
P0171 (DI–261)	System too Lean (Bank 1)	▲Air induction system ▲PCV hose connection ▲PCV hose ▲Injector blockage ▲Mass air flow meter ▲Engine coolant temp. sensor ▲Fuel pressure ▲Gas leak on exhaust system ▲Open or short in oxygen sensor (bank 1 sensor 1, 2) circuit ▲Oxygen sensor (bank 1 sensor 1, 2) ▲ECM	◀	◀
P0172 (DI–261)	System too Rich (Bank 1)	▲Injector leak, blockage ▲Mass air flow meter ▲Engine coolant temp. sensor ▲Ignition system ▲Fuel pressure ▲Gas leak in exhaust system ▲Open or short in oxygen sensor (bank 1 sensor 1, 2) circuit ▲Oxygen sensor (bank 1 sensor 1, 2) ▲ECM	◀	◀
P0174 (DI–261)	System too Lean (Bank 2)	▲Air induction system ▲PCV hose connection ▲PCV hose ▲Injector blockage ▲Mass air flow meter ▲Engine coolant temp. sensor ▲Fuel pressure ▲Gas leak on exhaust system ▲Open or short in oxygen sensor (bank 2 sensor 1, 2) circuit ▲Oxygen sensor (bank 2 sensor 1, 2) ▲ECM	◀	◀
P0175 (DI–261)	System too Rich (Bank 2)	▲Injector leak, blockage ▲Mass air flow meter ▲Engine coolant temp. sensor ▲Ignition system ▲Fuel pressure ▲Gas leak in exhaust system ▲Open or short in oxygen sensor (bank 2 sensor 1, 2) circuit ▲Oxygen sensor (bank 2 sensor 1, 2) ▲ECM	◀	◀
P0220 (DI–235)	Throttle/Pedal Position Sensor/ Switch ”B” Circuit	▲Open or short in throttle position sensor circuit ▲Throttle position sensor ▲ECM	◀	◀

P0222 (DI–235)	Throttle/Pedal Position Sensor/ Switch "B" Circuit Low Input	▲Open in throttle position sensor circuit ▲Short in ground circuit ▲Throttle position sensor ▲ECM	◀	◀
P0223 (DI–235)	Throttle/Pedal Position Sensor/ Switch "B" Circuit High Input	▲Short in throttle position sensor circuit (+B circuit) ▲Throttle position sensor ▲ECM	◀	◀
P0230 (DI–266)	Fuel Pump Primary Circuit	▲Open or short in fuel pump relay circuit ▲Circuit opening relay ▲Fuel pump relay ▲Fuel pump ▲ECM	–	◀
P0300 (DI–273)	Random/Multiple Cylinder Misfire Detected	▲Open or short engine wire ▲Connector connection ▲Vacuum hose connection ▲PCV hose connection ▲PCV hose ▲Ignition system ▲Injector ▲Fuel pressure ▲Mass air flow meter ▲Engine coolant temp. sensor ▲Compression pressure ▲Valve clearance ▲Valve timing ▲ECM	◀*2	◀
P0301 (DI–273)	Cylinder 1 Misfire Detected		◀*2	◀
P0302 (DI–273)	Cylinder 2 Misfire Detected			
P0303 (DI–273)	Cylinder 3 Misfire Detected			
P0304 (DI–273)	Cylinder 4 Misfire Detected			
P0305 (DI–273)	Cylinder 5 Misfire Detected		◀*2	◀
P0306 (DI–273)	Cylinder 6 Misfire Detected			
P0307 (DI–273)	Cylinder 7 Misfire Detected			
P0308 (DI–273)	Cylinder 8 Misfire Detected			
P0325 (DI–283)	Knock Sensor 1 Circuit (Bank 1 or Single Sensor)	▲Open or short in knock sensor 1 circuit ▲Knock sensor (looseness) ▲ECM	◀	◀
P0330 (DI–283)	Knock Sensor 2 Circuit (Bank 2)	▲Open or short in knock sensor 2 circuit ▲Knock sensor (looseness) ▲ECM	◀	◀
P0335 (DI–287)	Crankshaft Position Sensor "A" Circuit	▲Open or short in crankshaft position sensor circuit ▲Crankshaft position sensor ▲Signal plate ▲ECM	◀	◀
P0339 (DI–289)	Crankshaft Position Sensor "A" Circuit Intermittent	▲Open or short in crankshaft position sensor circuit ▲Crankshaft position sensor ▲Signal plate ▲ECM	–	◀
P0340 (DI–290)	Camshaft Position Sensor "A" Circuit (Bank 1 or Single Sensor)	▲Open or short in camshaft position sensor circuit ▲Camshaft position sensor ▲Intake camshaft ▲ECM	◀	◀
P0341 (DI–290)	Camshaft Position Sensor "A" Circuit Range/Performance (Bank 1 or Single Sensor)		◀	◀

P0351 (DI–292)	Ignition Coil "A" Primary/Secondary Circuit	▲Ignition system ▲Open or short in IGF1 and IGT1 circuit from No. 1 ignition coil with igniter to ECM ▲No. 1 ignition coil with igniter ▲ECM	◀	◀
P0352 (DI–292)	Ignition Coil "B" Primary/Secondary Circuit	▲Ignition system ▲Open or short in IG2F and IGT2 circuit from No. 2 ignition coil with igniter to ECM ▲No. 2 ignition coil with igniter ▲ECM	◀	◀
P0353 (DI–292)	Ignition Coil "C" Primary/Secondary Circuit	▲Ignition system ▲Open or short in IGF2 and IGT3 circuit from No. 3 ignition coil with igniter to ECM ▲No. 3 ignition coil with igniter ▲ECM	◀	◀
P0354 (DI–292)	Ignition Coil "D" Primary/Secondary Circuit	▲Ignition system ▲Open or short in IGF1 and IGT4 circuit from No. 4 ignition coil with igniter to ECM ▲No. 4 ignition coil with igniter ▲ECM	◀	◀
P0355 (DI–292)	Ignition Coil "E" Primary/Secondary Circuit	▲Ignition system ▲Open or short in IGF2 and IGT5 circuit from No. 5 ignition coil with igniter to ECM ▲No. 5 ignition coil with igniter ▲ECM	◀	◀
P0356 (DI–292)	Ignition Coil "F" Primary/Secondary Circuit	▲Ignition system ▲Open or short in IGF1 and IGT6 circuit from No. 6 ignition coil with igniter to ECM ▲No. 6 ignition coil with igniter ▲ECM	◀	◀
P0357 (DI–292)	Ignition Coil "G" Primary/Secondary Circuit	▲Ignition system ▲Open or short in IGF1 and IGT7 circuit from No. 7 ignition coil with igniter to ECM ▲No. 7 ignition coil with igniter ▲ECM	◀	◀
P0358 (DI–292)	Ignition Coil "F" Primary/Secondary Circuit	▲Ignition system ▲Open or short in IGF2 and IGT8 circuit from No. 8 ignition coil with igniter to ECM ▲No. 8 ignition coil with igniter ▲ECM	◀	◀
P0420 (DI–300)	Catalyst System Efficiency Below Threshold (Bank 1)	▲Gas leak on exhaust system ▲Oxygen sensor (bank 1 sensor 1, 2) ▲Three–way catalytic converter	◀	◀
P0430 (DI–300)	Catalyst System Efficiency Below Threshold (Bank 2)	▲Gas leak on exhaust system ▲Oxygen sensor (bank 2 sensor 1, 2) ▲Three–way catalytic converter	◀	◀

P0441 (DI–303)	Evaporative Emission Control System Incorrect Purge Flow	▲Vacuum hose cracks, holed, blocked, damaged or disconnected EVAP hose and air inlet line ▲Fuel tank cap incorrectly installed ▲Fuel tank cap cracked or damaged ▲Open or short in vapor pressure sensor circuit ▲Vapor pressure sensor ▲Open or short in VSV circuit for EVAP ▲VSV for EVAP ▲Open or short in VSV circuit for CCV ▲VSV for CCV ▲Fuel tank cracked, holed or damaged ▲Charcoal canister cracked, holed or damaged ▲Fuel tank overfill check valve cracked or damaged ▲ECM	◀	◀
P0442 (DI–303)	Evaporative Emission Control System Leak detected (small leak)	▲Hose or tube cracked, holed, damaged or insufficient seal ▲Fuel tank cap incorrectly installed ▲Fuel tank cap cracked or damaged ▲Vacuum hose cracked, holed, blocked, damaged or disconnected ▲Fuel tank cracked, holed or damaged ▲Charcoal canister cracked, holed or damaged ▲Open or short in vapor pressure sensor circuit ▲Vapor pressure sensor ▲Fuel tank over fill check valve cracked or damaged ▲ECM	◀	◀
P0446 (DI–303)	Evaporative Emission Control System Vent Control Circuit	▲Same as DTC No. P0441	◀	◀
P0451 (DI–330)	Evaporative Emission Control System Pressure Sensor/Switch Range/Performance	▲Open or short in vapor pressure sensor circuit ▲Vapor pressure sensor ▲ECM	◀	◀
P0452 (DI–330)	Evaporative Emission Control System Pressure Sensor/Switch Low Input	▲Open in vapor pressure sensor circuit ▲Vapor pressure sensor ▲ECM	◀	◀
P0453 (DI–330)	Evaporative Emission Control System Pressure Sensor/Switch High Input	▲Short in vapor pressure sensor circuit ▲Vapor pressure sensor ▲ECM	◀	◀
P0456 (DI–303)	Evaporative Emission Control System Leak detected (very small leak)	▲Same as DTC No. P0442	◀	◀
P0500 (DI–334)	Vehicle Speed Sensor ”A”	▲Combination meter ▲Open or short in vehicle speed sensor circuit ▲Vehicle speed sensor ▲ECM	◀	◀
P0503 (DI–334)	Vehicle Speed Sensor ”A” Intermittent/Erratic/High	▲Combination meter ▲Open or short in vehicle speed sensor circuit ▲Vehicle speed sensor ▲ECM	–	◀
P0504 (DI–338)	Brake Switch Correlation	▲Short in stop light switch signal circuit ▲Stop light switch ▲ECM	–	◀
P0505 (DI–342)	Idle Air Control System	▲PCV hose connection ▲PCV hose ▲Air induction system ▲Electric control system	◀	◀

P0560 (DI–344)	System Voltage	▲Open in back–up power source circuit ▲ECM	◀	◀
P0571 (DI–346)	Brake Switch "A" Circuit	▲Short in stop light switch signal circuit ▲Stop light switch ▲ECM	◀	◀
P0604 (DI–347)	Internal Control Module Random Access Memory (RAM) Error	▲ECM	◀	◀
P0606 (DI–347)	ECM/PCM Processor	▲ECM	◀	◀
P0607 (DI–347)	Control Module Performance	▲ECM	◀	◀
P0617 (DI–348)	Starter Relay Circuit High	▲Starter relay ▲Park/neutral position (PNP) switch ▲Ignition switch ▲ECM	◀	◀
P0657 (DI–347)	Actuator Supply Voltage Circuit / Open	▲ECM	◀	◀
P0705 (DI–352)	Transmission Range Sensor Circuit Malfunction (PRNDL Input)	▲Short in park/neutral position switch circuit ▲Park/neutral position switch ▲ECM	◀	◀
P2102 (DI–353)	Throttle Actuator Control Motor Circuit Low	▲Open in throttle control motor circuit ▲Throttle control motor ▲ECM	◀	◀
P2103 (DI–353)	Throttle Actuator Control Motor Circuit High	▲Short in throttle control motor circuit ▲Throttle control motor ▲ECM	◀	◀
P2111 (DI–356)	Throttle Actuator Control System – Stuck Open	▲Throttle control motor ▲Throttle body	◀	◀
P2112 (DI–356)	Throttle Actuator Control System – Stuck Closed	▲Throttle control motor ▲Throttle body	◀	◀
P2118 (DI–358)	Actuator Control Motor Current Range/Performance	▲Open in ETCS power source circuit ▲ECM	◀	◀
P2119 (DI–360)	Throttle Actuator Control Throttle Body Range/Performance	▲Electric throttle control system ▲ECM	◀	◀
P2120 (DI–361)	Throttle/Pedal Position Sensor/ Switch "D" Circuit	▲Open or short in accelerator pedal position sensor circuit ▲Accelerator pedal position sensor ▲ECM	◀	◀
P2121 (DI–369)	Throttle/Pedal Position Sensor/ Switch "D" Circuit Range/Performance	▲Accelerator pedal position sensor	◀	◀
P2122 (DI–361)	Throttle/Pedal Position Sensor/ Switch "D" Circuit Low Input	▲Open in accelerator pedal position sensor circuit ▲Short in ground circuit ▲Accelerator pedal position sensor ▲ECM	◀	◀
P2123 (DI–361)	Throttle/Pedal Position Sensor/ Switch "D" Circuit High Input	▲Short in accelerator pedal position sensor circuit (+B circuit) ▲Accelerator pedal position sensor ▲ECM	◀	◀
P2125 (DI–361)	Throttle/Pedal Position Sensor/ Switch "E" Circuit	▲Open or short in accelerator pedal position sensor circuit ▲Accelerator pedal position sensor ▲ECM	◀	◀

P2127 (DI–361)	Throttle/Pedal Position Sensor/ Switch "E" Circuit Low Input	▲Open in accelerator pedal position sensor circuit ▲Short in ground circuit ▲Accelerator pedal position sensor ▲ECM	◀	◀
P2128 (DI–361)	Throttle/Pedal Position Sensor/ Switch "E" Circuit High Input	▲Short in accelerator pedal position sensor circuit (+B circuit) ▲Accelerator pedal position sensor ▲ECM	◀	◀
P2135 (DI–235)	Throttle Pedal Position Sensor/ Switch "A" / "B" Voltage Correlation	▲Open or short in throttle position sensor circuit ▲Throttle position sensor ▲ECM	◀	◀
P2138 (DI–361)	Throttle Pedal Position Sensor/ Switch "D" / "E" Voltage Correlation	▲Open or short in throttle position sensor circuit ▲Throttle position sensor ▲ECM	◀	◀
P2195 (DI–246)	Oxygen Sensor Circuit Range/ Performance Lean Side (Bank 1 Sensor 1)	▲Open or short in oxygen sensor circuit ▲Oxygen sensor ▲Air induction system ▲Fuel pressure ▲Injector ▲ECM	◀	◀
P2196 (DI–246)	Oxygen Sensor Circuit Range/ Performance Rich Side (Bank 1 Sensor 1)		◀	◀
P2197 (DI–246)	Oxygen Sensor Circuit Range/ Performance Lean Side (Bank 2 Sensor 1)		◀	◀
P2198 (DI–246)	Oxygen Sensor Circuit Range/ Performance Rich Side (Bank 2 Sensor 1)		◀	◀

*1: MIL lights up.
*2: MIL lights up or blinks.
*: – .... MIL does not light up, ◀ .... MIL lights up

DI1L5–15

PARTS LOCATION

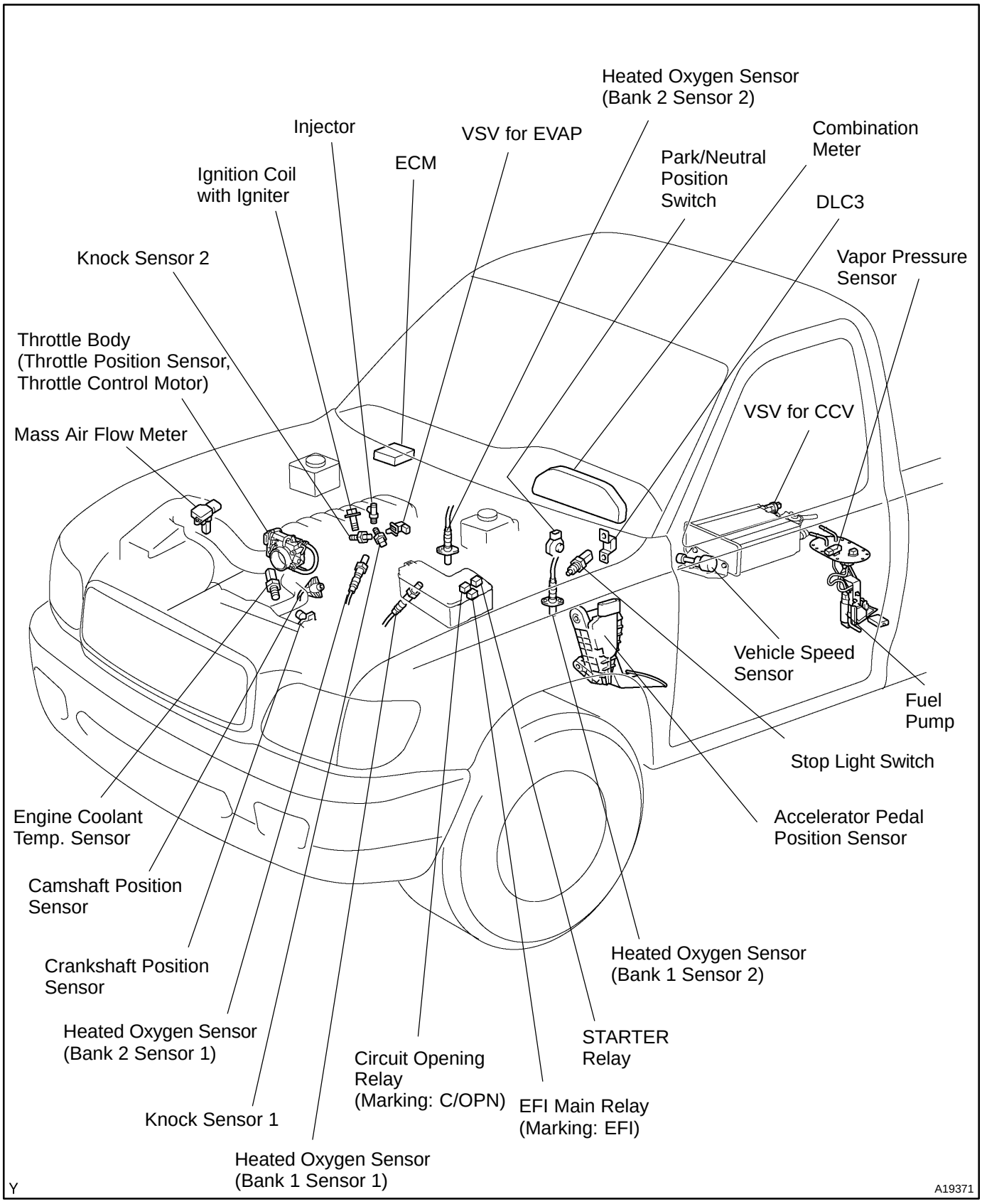

DI1L7–14

TERMINALS OF ECM

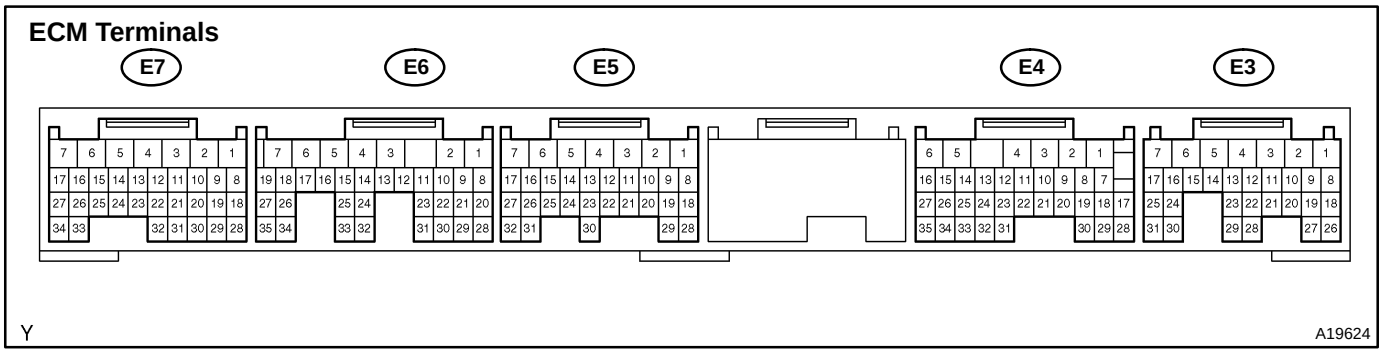

Symbols (Terminals No.)	Wiring Color	Condition	STD Voltage (V)
BATT (E3–3) – E1 (E5–1)	B–R – BR	Always	9 – 14
+BM (E4–6) – E1 (E5–1)	W–G – BR		
IGSW (E3–9) – E1 (E5–1)	B–O – BR	IG switch ON	9 – 14
+B (E3–1) – E1 (E5–1)	W–L – BR		
+B2 (E3–2) – E1 (E5–1)	W–L – BR		
MREL (E3–8) – E1 (E5–1)	B–Y – BR	IG switch ON	9 – 14
VC (E7–18) – E2 (E7–28)	G–B – B–W	IG switch ON	4.5 – 5.5
VG (E7–30) – E2G (E7–29)	R–W – B–Y	Idling, shift lever position P or N position, A/C switch OFF	0.5 – 3.0
THA (E7–20) – E2 (E7–28)	Y–G – B–W	Idling, Intake air temp. 20˚C (68˚F)	0.5 – 3.4
THW (E7–19) – E2 (E7–28)	G – B–W	Idling, Engine coolant temp. 80˚C (176˚F)	0.2 – 1.0
VTA1 (E7–21) – E2 (E7–28)	B–Y – B–W	IG switch ON, Accelerator pedal released	0.4 – 1.0
		IG switch ON, Accelerator pedal depressed	3.2 – 4.8
VTA2 (E7–31) – E2 (E7–28)	P–L – B–W	IG switch ON, Accelerator pedal released	2.1 – 3.0
		IG switch ON, Accelerator pedal depressed	4.7 – 5.1
VPA (E3–22) – EPA (E3–28)	R–G – V–R	IG switch ON, Accelerator pedal released	0.3 – 0.9
		IG switch ON, Accelerator pedal depressed	3.2 – 4.8
VPA2 (E3–23) – EPA2 (E3–29)	L – LG–R	IG switch ON, Accelerator pedal released	1.8 – 2.7
		IG switch ON, Accelerator pedal depressed	4.5 – 5.5
VCPA (E3–26) – EPA (E3–28)	P–G – V–R	IG switch ON	4.5 – 5.5
VCP2 (E3–27) – EPA2 (E3–29)	P–G – LG–R	IG switch ON	4.5 – 5.5
OX1A (E6–23) – E1 (E5–1) OX1B (E6–29) – E1 (E5–1) OX2A (E6–22) – E1 (E5–1) OX2B (E6–21) – E1 (E5–1)	B – BR B – BR W – BR W – BR	Maintain engine speed at 2,500 rpm for 2 minutes after warming up	Pulse generation (See page DI–300)
HT1A (E6–4) – E1 (E5–1) HT1B (E6–5) – E1 (E5–1) HT2A (E6–33) – E1 (E5–1) HT2B (E6–25) – E1 (E5–1)	G–Y – BR R–Y – BR Y–G – BR Y–B – BR	Idling	Below 3.0
		IG switch ON	9 – 14
#1 (E7–1) – E01 (E7–7) #2 (E7–2) – E01 (E7–7) #3 (E7–3) – E01 (E7–7) #4 (E7–4) – E01 (E7–7) #5 (E7–5) – E01 (E7–7) #6 (E6–3) – E01 (E7–7) #7 (E5–6) – E01 (E7–7) #8 (E5–5) – E01 (E7–7)	R – W–B W – W–B G – W–B R–B – W–B L – W–B Y – W–B L–R – W–B R–W – W–B	IG switch ON	9 – 14
		Idling	Pulse generation (See page DI–273)

KNK1 (E6–1) – E1 (E5–1)	GR – BR	Maintain engine speed at 4,000 rpm after warming up	Pulse generation (See page DI–283)
KNK2 (E6–2) – E1 (E5–1)	B – BR		
G2 (E5–27) – G2– (E5–32)	Y – L	Idling	Pulse generation (See page DI–287)
NE+ (E5–25) – NE– (E5–24)	G – R		
PRG (E7–34) – E1 (E5–1)	W–G – BR	IG switch ON	9 – 14
PTNK (E3–21) – E2 (E7–28)	R–L – B–W	Ignition switch ON	2.9 – 3.7
		Apply vacuum 4.0 kPa (26 mmHg, 1.0 in.Hg)	Below 0.5
SPD (E4–17) – E1 (E5–1)	G–O – BR	IG switch ON, Rotate driving wheel slowly	Pulse generation (See page DI–334)
M+ (E5–3) – E1 (E5–1) M– (E5–2) – E1 (E5–1)	R – BR W – BR	Idling	Pulse generation (See page DI–353)
FPR (E7–33) – E1 (E5–1)	B–L – BR	IG switch ON	0 – 3.0
FC (E3–10) – E1 (E5–1)	Y – BR	IG switch ON	9 – 14
IGT1 (E7–9) – E1 (E5–1) IGT2 (E7–8) – E1 (E5–1) IGT3 (E7–25) – E1 (E5–1) IGT4 (E7–11) – E1 (E5–1) IGT5 (E7–12) – E1 (E5–1) IGT6 (E7–26) – E1 (E5–1) IGT7 (E7–13) – E1 (E5–1) IGT8 (E7–10) – E1 (E5–1)	G–R – BR LG–B – BR G–B – BR B–L – BR G–W – BR P–L – BR R–W – BR LG – BR	Idling	Pulse generation (See page DI–292)
IGF1 (E7–24) – E1 (E5–1) IGF2 (E7–23) – E1 (E5–1)	L–B – BR L–W – BR	IG switch ON	4.5 – 5.5
		Idling	Pulse generation (See page DI–292)
STP (E4–19) – E1 (E5–1)	G–W – BR	Brake pedal is depressed	7.5 – 14
		Brake pedal is released	Below 1.5
STA (E7–17) – E1 (E5–1)	P – BR	Shift lever position P or N, Ignition switch START	6.0 or more
NSW (E7–16) – E1 (E5–1)	W–B – BR	IG switch ON, Other shift position in P, N	9 – 14
		IG switch ON, Shift position in P, N	0 – 3.0
W (E3–11) – E1 (E5–1)	V–G – BR	Idling	9 – 14
		IG switch ON	Below 3.0
ST1– (E4–12) – E1 (E5–1)	L–B – BR	IG switch ON, Brake pedal is depressed	Below 1.5
		IG switch ON, Brake pedal is released	7.5 ~ 14
SIL (E3–18) – E1 (E5–1)	W – BR	During chaarge of gears	Pulse generation
ELS (E3–12) – E1 (E5–1)	G–Y – BR	Taillight switch ON, Defogger switch ON	7.5 – 14
		Taillight switch OFF, Defogger switch OFF	0 – 1.5
TACH (E3–5) – E1 (E5–1)	L–W – BR	Idling	Pulse generation
SIL (E3–18) – E1 (E5–1)	W – BR	During transmission	Pulse generation

DI1L9–10

PROBLEM SYMPTOMS TABLE

Symptom	Suspected Area	See page
Engine does not crank (Does not start)	1. Starter 2. Starter relay	ST–18 ST–20
No initial combustion (Does not start)	1. ECM power source circuit 2. Fuel pump control circuit	DI–370 DI–266
No complete combustion (Does not start)	1. Fuel pump control circuit	DI–266
Under normal condition (Difficult to start)	1. Starter signal circuit 2. Fuel pump control circuit 3. Compression	DI–374 DI–266 EM–3
Cold engine (Difficult to start)	1. Starter signal circuit 2. Fuel pump control circuit	DI–374 DI–266
Hot engine (Difficult to start)	1. Starter signal circuit 2. Fuel pump control circuit	DI–374 DI–266
High engine idle speed (Poor idling)	1. A/C signal circuit (Compressor circuit) 2. ECM power source circuit	IN–27 DI–370
Low engine idle speed (Poor idling)	1. A/C signal circuit (Compressor circuit) 2. Fuel pump control circuit	IN–27 DI–266
Rough idling (Poor idling)	1. Compression 2. Fuel pump control circuit	EM–3 DI–266
Hunting (Poor idling)	1. ECM power source circuit 2. Fuel pump control circuit	DI–370 DI–266
Hesitation/Poor acceleration (Poor driveability)	1. Fuel pump control circuit 2. A/T faulty	DI–266 DI–400
Surging (Poor driveability)	1. Fuel pump control circuit	DI–266
Engine stalls during A/C operation	1. Fuel pump control circuit	DI–266
Engine stalls soon after starting	1. A/C signal circuit (Compressor circuit) 2. ECM	IN–27 DI–370

DIA7Y–01

CIRCUIT INSPECTION

DTC	P0031	Oxygen Sensor Heater Control Circuit Low (Bank 1 Sensor 1)

DTC	P0032	Oxygen Sensor Heater Control Circuit High (Bank 1 Sensor 1)

DTC	P0037	Oxygen Sensor Heater Control Circuit Low (Bank 1 Sensor 2)

DTC	P0038	Oxygen Sensor Heater Control Circuit High (Bank 1 Sensor 2)

DTC	P0051	Oxygen Sensor Heater Control Circuit Low (Bank 2 Sensor 1)

DTC	P0052	Oxygen Sensor Heater Control Circuit High (Bank 2 Sensor 1)

DTC	P0057	Oxygen Sensor Heater Control Circuit Low (Bank 2 Sensor 2)

DTC	P0058	Oxygen Sensor Heater Control Circuit High (Bank 2 Sensor 2)

CIRCUIT DESCRIPTION

Refer to DTC P0130 on page DI–246.

DTC No.	DTC Detection Condition	Trouble Area
P0031 P0032 P0037 P0038 P0051 P0052 P0057 P0058	When heater operates, heater current exceeds 2 A (1 trip detection logic)	▲Open or short in heater circuit of heated oxygen sensor ▲Heated oxygen sensor heater ▲ECM
	Heater current is 0.2 A or less when heater operates with +B > 10.5 V and < 11.5 V (1 trip detection logic)	
	Heater current is 0.25 A or less when heater operates with +B < 11.5 V (1 trip detection logic)	

HINT:

- ▲ Bank 1 refers to the bank that includes cylinder No.1.
- ▲ Bank 2 refers to the bank that does not include cylinder No.1.
- ▲ Sensor 1 refers to the sensor being closest to the engine body.
- ▲ Sensor 2 refers to the sensor being farthest from the engine body.

WIRING DIAGRAM

Refer to DTC P0130 on page DI–246.

INSPECTION PROCEDURE

HINT:

Read freeze frame data using hand–held tester or OBD II scan tool, as freeze frame data records the engine conditions when a malfunction is detected. When troubleshooting it is useful for determining whether the vehicle was running or stopped, the engine was warmed up or not, the air–fuel ratio was lean or rich, etc. at the time of the malfunction.

1	**Check voltage between terminals HT1A, HT1B, HT2A and HT2B of ECM connector.**

HINT:

- The HT1A means the oxygen sensor bank 1 sensor 1.
- The HT1B means the oxygen sensor bank 1 sensor 2.
- The HT2A means the oxygen sensor bank 2 sensor 1.
- The HT2B means the oxygen sensor bank 2 sensor 2.

PREPARATION:

(a) Remove the glove compartment (See page SF–55).

(b) Turn the ignition switch ON.

CHECK:

Measure the voltage of the ECM connector terminals as shown in the chart below.

OK:

Standard:

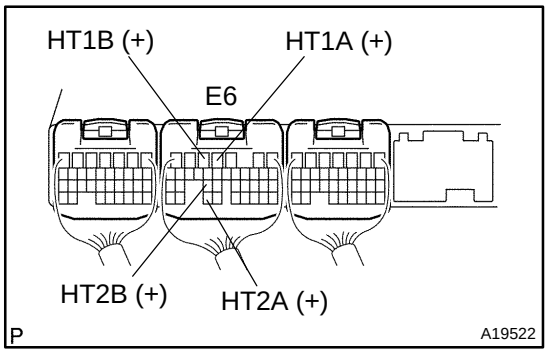

Symbols (Terminal No.)	Specified Condition
HT1A (E6–4) – Body ground	9 – 14 V
HT1B (E6–5) – Body ground	
HT2A (E6–33) – Body ground	
HT2B (E6–25) – Body ground	

OK → **Check and replace ECM (See page IN–27).**

NG

2	**Check resistance of heated oxygen sensor heater (See page SF–51).**

NG → **Replace heated oxygen sensor.**

OK

Check and repair harness or connector between EFI main relay (Marking: EFI) and heated oxygen sensor, and heated oxygen sensor and ECM (See page IN–27).

DIA7Z–01

DTC	P0100	Mass or Volume Air Flow Circuit

DTC	P0102	Mass or Volume Air Flow Circuit Low Input

DTC	P0103	Mass or Volume Air Flow Circuit High Input

CIRCUIT DESCRIPTION

The mass air flow meter uses a platinum hot wire. The hot wire mass air flow meter consists of a platinum hot wire, thermistor and a control circuit installed in a plastic housing. The hot wire mass air flow meter works on the principle that the hot wire and thermistor located in the intake air bypass of the housing detect any changes in the intake air temperature.

The hot wire is maintained at the set temperature by controlling the current flow through the hot wire. This current flow is then measured as the output voltage of the mass air flow meter.

The circuit is constructed so that the platinum hot wire and thermistor provide a bridge circuit, with the power transistor, and controlled so that the potential of A and B remains equal to maintain the set temperature.

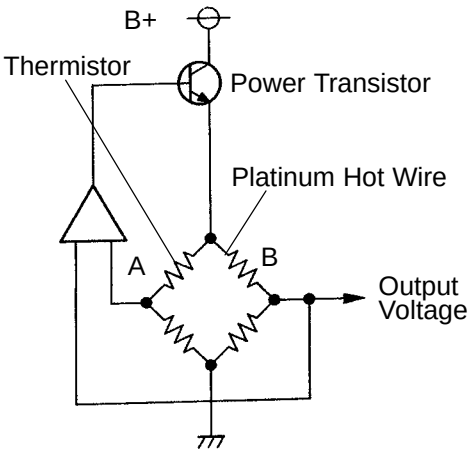

FI6929
B05010

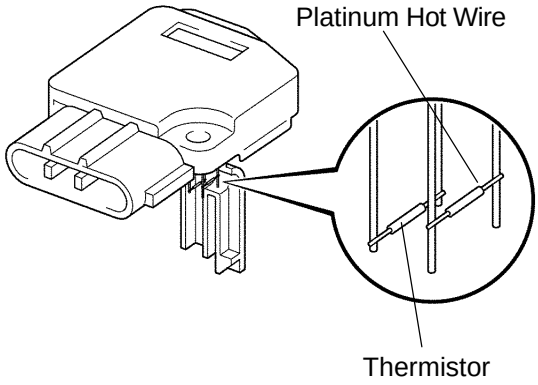

B05009

DTC No.	DTC Detection Condition	Trouble Area
P0100	Open or short in mass air flow meter circuit with more than 3 sec. engine speed 4,000 rpm or less	▲Mass air flow meter circuit ▲Mass air flow meter ▲ECM
P0102	Open in mass air flow meter circuit with more than 3 sec. engine speed 4,000 rpm or less	
P0103	Short in mass air flow meter circuit with more than 3 sec. engine speed 4,000 rpm or less	

HINT:

After confirming DTC P0100, P0102 or P0103, use the hand–held tester or the OBD II scan tool to confirm the mass air flow ratio from the CURRENT DATA.

Mass Air Flow Value (gm/sec.)	Malfunction
Approx. 0.0	▲Mass air flow meter power source circuit open ▲VG circuit open or short
271.0 or more	▲EVG circuit open

WIRING DIAGRAM

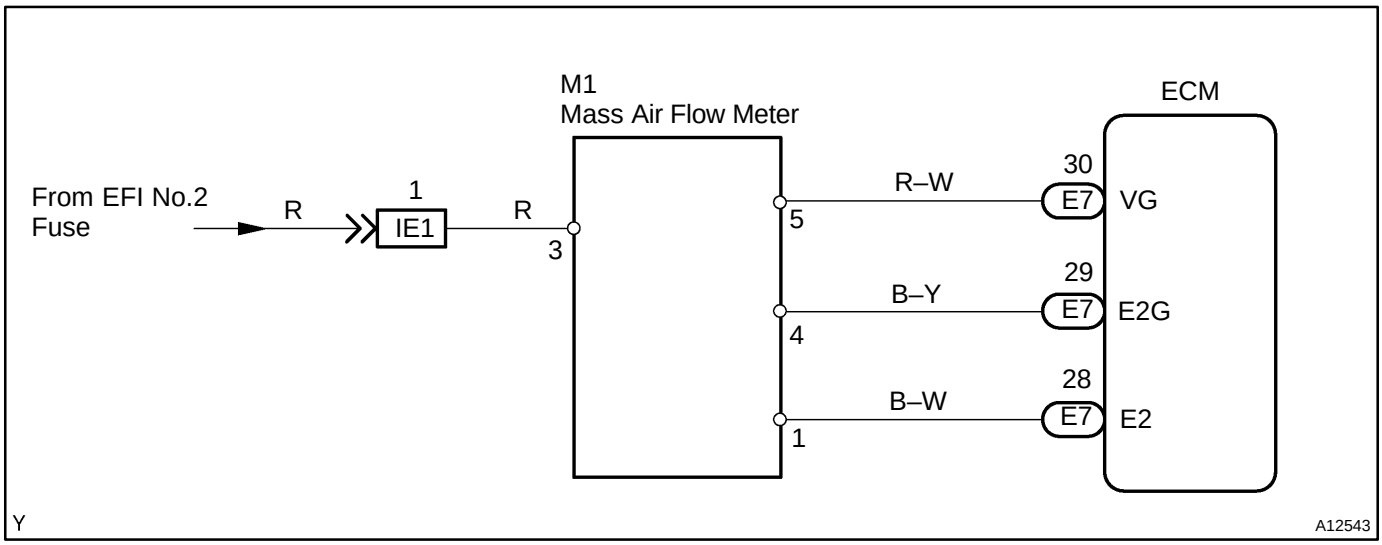

INSPECTION PROCEDURE

HINT:

- ▲ If different DTCs that are related to different systems are output simultaneously while terminal E2 is used as a ground terminal, terminal E2 may be open.
- ▲ Read freeze frame data using hand–held tester or OBD II scan tool, as freeze frame data records the engine conditions when a malfunction is detected. When troubleshooting, it is useful for determining whether the vehicle was running or stopped, the engine was warmed up or not, the air–fuel ratio was lean or rich, etc. at the time of the malfunction.

1	**Connect read value of mass air flow rate on scan tool (OBD ll scan tool or hand–held tester).**

PREPARATION:

(a) Connect the scan tool.
(b) Turn the ignition switch ON and the scan tool main switch ON.
(c) Start the engine.

CHECK:

Read the mass air flow rate.

RESULT:

	Type I	Type II
Mass Air Flow Rate (gm/sec.)	0.0	271.0 or more

Type II	**Go to step 5.**

Type I

2	Check voltage of mass air flow meter power source.

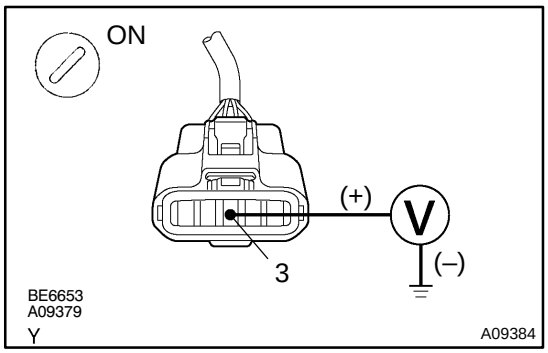

PREPARATION:

(a) Disconnect the mass air flow meter connector.

(b) Turn the ignition switch ON.

CHECK:

Measure the voltage between terminal 3 of the mass air flow meter connector and the body ground.

OK:

Voltage: 9 – 14 V

NG	Check for open in harness and connector between EFI main relay (Marking: EFI) and mass air flow meter (See page IN–27).

OK

3	Check voltage between terminal VG and E2G of ECM connector.

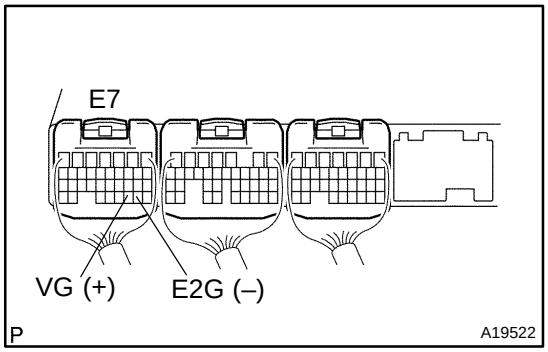

PREPARATION:

(a) Remove the glove compartment (See page SF–55).

(b) Start the engine.

CHECK:

Measure the voltage between terminal VG and E2G of the ECM connector.

OK:

0.5 – 3.0 V

OK	Check and replace ECM (See page IN–27).

NG

4	Check for open and short in harness and connector between mass air flow meter and ECM (See page IN–27).

NG	Repair or replace harness or connector.

OK

Replace mass air flow meter.

5	**Check continuity between terminal E2G and E2 of ECM connector.**

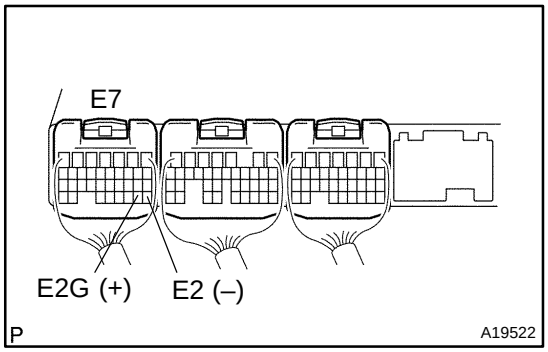

PREPARATION:
Remove the glove compartment (See page SF–55).
CHECK:
Check the continuity between terminal E2G and E2 of the ECM connector.
OK:
Continuity (1 Ω or less)

NG → **Check and replace ECM (See page IN–27).**

OK

6	**Check for open in harness and connector between mass air flow meter and ECM (See page IN–27).**

NG → **Repair or replace harness or connector.**

OK

Replace mass air flow meter.

DTC	P0101	Mass or Volume Air Flow Circuit Range/ Performance Problem

CIRCUIT DESCRIPTION

Refer to DTC P0100 on page DI–220.

DTC No.	DTC Detection Condition	Trouble Area
P0101	After engine is warmed up, conditions (a) and (b) continue with more than 10 sec. engine speed less than 900 rpm: (2 trip detection logic) (b) Throttle valve fully closed (c) Mass air flow meter output > 2.2 V	▲Mass air flow meter
	Conditions (a) and (b) continue with more than 6 sec. engine speed 0 rpm or more: (2 trip detection logic) (a) VTA 0.63 V (b) Mass air flow meter output < 0.25 V	

INSPECTION PROCEDURE

HINT:

Read freeze frame data using hand–held tester or OBD II scan tool, as freeze frame data records the engine conditions when a malfunction is detected. When troubleshooting, it is useful for determining whether the vehicle was running or stopped, the engine was warmed up or not, the air–fuel ratio was lean or rich, etc. at the time of the malfunction.

1	Are there any other codes (besides DTC P0101) being output?

NO → Replace mass air flow meter.

YES

Go to relevant DTC chart (See page DI–194).

DIA80–01

DTC	P0110	Intake Air Temperature Circuit

DTC	P0112	Intake Air Temperature Circuit Low Input

DTC	P0113	Intake Air Temperature Circuit High Input

CIRCUIT INSPECTION

(Fig. 1)

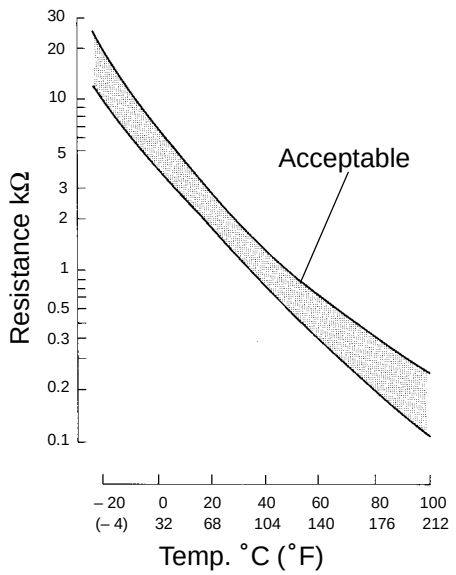

The intake air temperature sensor is built in the mass air flow meter and senses the intake air temperature.
A thermistor built in the sensor changes the resistance value according to the intake air temperature.
The lower the intake air temperature is, the greater the thermistor resistance value becomes, and the higher the intake air temperature is, the lower the thermistor resistance value becomes (See Fig. 1).
The intake air temperature sensor is connected to the ECM (See below). The 5 V power source voltage in the ECM is applied to the intake air temperature sensor from terminal THA via resistor R.
That is, resistor R and the intake air temperature sensor are connected in series. When the resistance value of the intake air temperature sensor changes in accordance with changes in the intake air temperature, the potential at terminal THA also changes. Based on this signal, the ECM increases the fuel injection volume to improve the driveability during cold engine operation.

DTC No.	Proceed to	DTC Detection Condition	Trouble Area
P0110	Step 1	Open or short in intake air temp. sensor circuit for 0.5 sec.	▲Intake air temp. sensor circuit ▲Intake air temp. sensor (built in mass air flow meter) ▲ECM
P0112	Step 4	Short in intake air temp. sensor circuit for 0.5 sec.	
P0113	Step 2	Open in intake air temp. sensor circuit for 0.5 sec.	

HINT:
After confirming DTC P0110, P0112 or P0113 use the OBD II scan tool or hand – held tester to confirm the intake air temperature from the CURRENT DATA.

Displayed Temperature	Malfunction
–40˚C (–40˚F)	Open circuit
140˚C (284˚F) or more	Short circuit

WIRING DIAGRAM

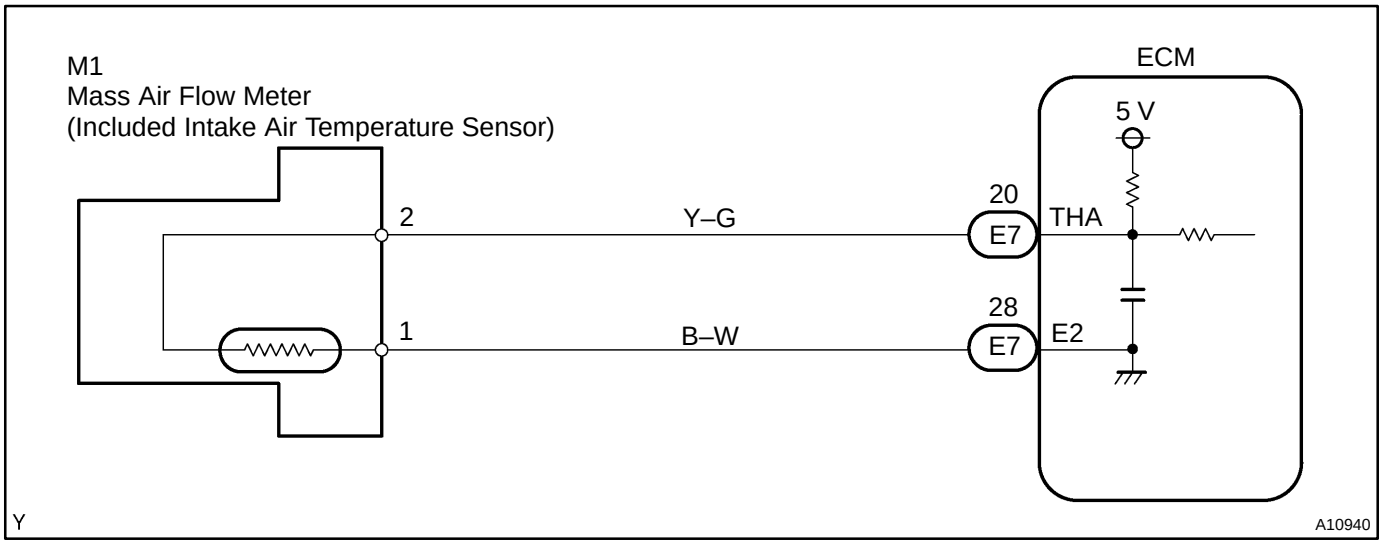

INSPECTION PROCEDURE

HINT:

- If different DTCs that are related to different systems are output simultaneously while terminal E2 is used as a ground terminal, terminal E2 may be open.
- Read freeze frame data using hand–held tester or OBD II scan tool, as freeze frame data records the engine conditions when a malfunction is detected. When troubleshooting, it is useful for determining whether the vehicle was running or stopped, the engine was warmed up or not, the air–fuel ratio was lean or rich, etc. at the time of the malfunction.

1	**Read value of intake air temperature on scan tool (OBD II scan tool or hand–held tester).**

PREPARATION:

(a) Connect the scan tool to the DLC3.
(b) Turn the ignition switch ON.

CHECK:

Read the temperature value.

OK:

Same value as actual intake air temperature.

HINT:

- If there is an open circuit, the scan tool indicates –40˚C (–40˚F).
- If there is a short circuit, the scan tool indicates 140˚C (284˚F).

NG → **–40˚C (–40˚F) ... Go to step 2.**
140˚C (284˚F) ... Go to step 4.

OK

Check for intermittent problems
(See page DI–194).

2	Check for open in wire harness.

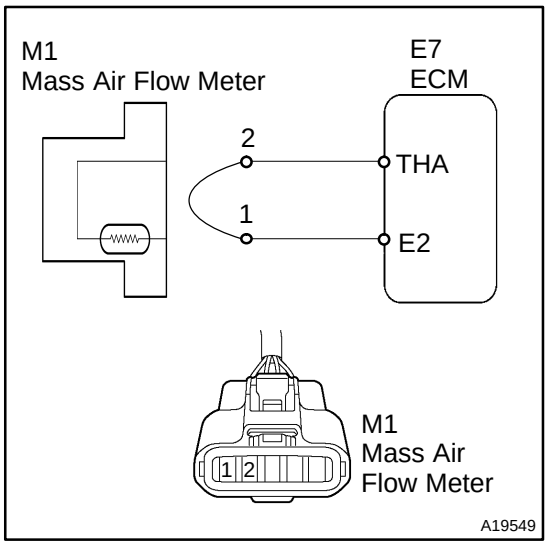

PREPARATION:

(a) Disconnect the mass air flow meter connector.

(b) Connect a jamper wire between the terminals of the sensor wire harness side connector .

(c) Turn the ignition switch ON.

CHECK:

Read the temperature value on the scan tool.

OK:

Temperature value: 140°C (284°F) or more

OK	Confirm good connection at sensor. If OK, replace mass air flow meter.

NG

3	Check for open in ECM.

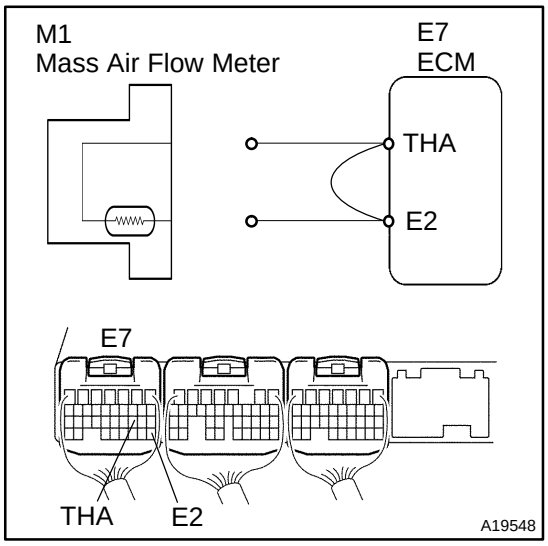

PREPARATION:

(a) Remove the glove compartment (See page SF–55).

(b) Connect a jamper wire between the terminals THA and E2 of the ECM connector.

HINT:

The mass air flow meter connector is disconnected.

CHECK:

Read the temperature value on the scan tool.

OK:

Temperature value: 140°C (284°F) or more

OK	Open in harness between terminal E2 or THA, repair or replace harness.

NG

Confirm good connection at ECM. If OK, check and replace ECM (See page IN–27).

4	Check for short in harness and ECM.

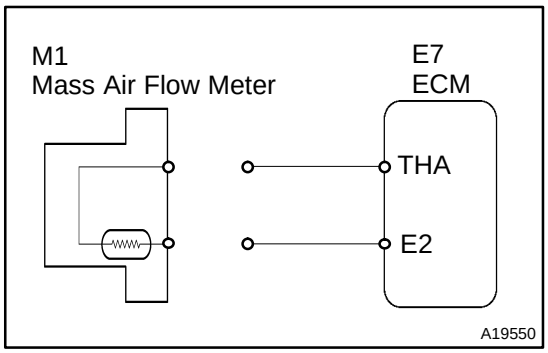

PREPARATION:
(a) Disconnect the mass air flow meter connector.
(b) Turn the ignition switch ON.
CHECK:
Read the temperature value on the OBD II scan tool or hand–held tester.
OK:
Temperature value: –40°C (–40°F)

OK	Replace mass air flow meter.

NG

5	Check for short in harness or ECM.

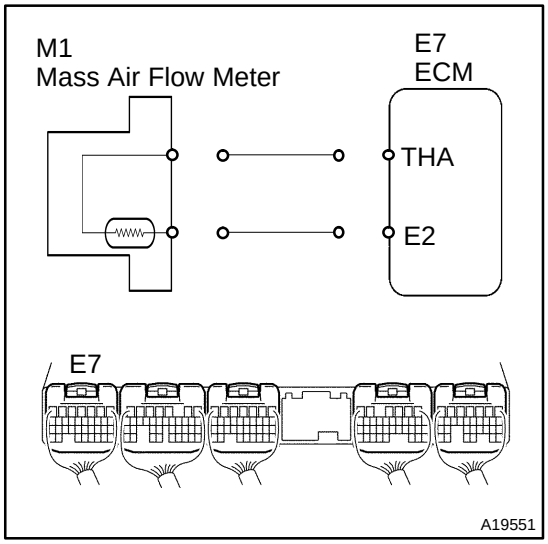

PREPARATION:
(a) Remove the glove compartment (See page SF–55).
(b) Disconnect the E7 connector from the ECM.
HINT:
The mass air flow meter connector is disconnected.
(c) Turn the ignition switch ON.
CHECK:
Read the temperature value on the OBD II scan tool or hand–held tester.
OK:
Temperature value: –40°C (–40°F)

OK	Repair or replace harness or connector.

NG

Check and replace ECM (See page IN–27).

DIA81–01

DTC	P0115	Engine Coolant Temperature Circuit

DTC	P0117	Engine Coolant Temperature Circuit Low Input

DTC	P0118	Engine Coolant Temperature Circuit High Input

CIRCUIT DESCRIPTION

A thermistor built in the engine coolant temperature sensor changes the resistance value according to the engine coolant temperature.

The structure of the sensor and the connection to the ECM is the same as those of the intake air temperature circuit malfunction shown on page DI–225.

DTC No.	Proceed to	DTC Detection Condition	Trouble Area
P0115	Step 1	Open or short in engine coolant temp. sensor circuit for 0.5 sec.	▲Engine coolant temp. sensor circuit ▲Engine coolant temp. sensor ▲ECM
P0117	Step 4	Short in engine coolant temp. sensor circuit for 0.5 sec.	
P0118	Step 2	Open in engine coolant temp. sensor circuit for 0.5 sec.	

HINT:

After confirming DTC P0115, P0117 or P0118 use the hand–held tester or OBD II scan tool to confirm the engine coolant temperature from the CURRENT DATA.

Temperature Displayed	Malfunction
–40°C (–40°F)	Open circuit
140C° (284°F) or more	Short circuit

WIRING DIAGRAM

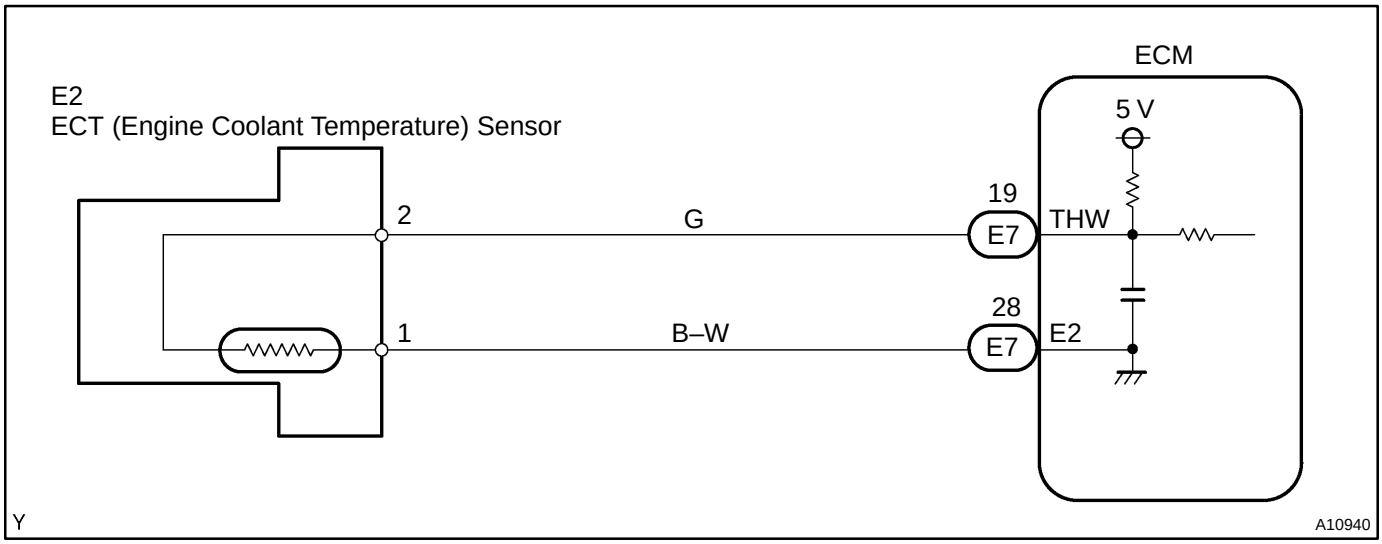

INSPECTION PROCEDURE

HINT:

- If different DTCs that are related to different systems are output simultaneously while terminal E2 is used as a ground terminal, terminal E2 may be open.
- Read freeze frame data using hand–held tester or OBD II scan tool, as freeze frame data records the engine conditions when a malfunction is detected. When troubleshooting, it is useful for determining whether the vehicle was running or stopped, the engine was warmed up or not, the air–fuel ratio was lean or rich, etc. at the time of the malfunction.

1	**Read value of engine coolant temperature on scan tool (OBD II scan tool or hand–held tester).**

PREPARATION:

(a) Connect the scan tool to the DLC3.

(b) Turn the ignition switch ON.

CHECK:

Read the temperature value.

OK:

Same value as actual engine coolant temperature.

HINT:

- If there is open circuit, the scan tool indicates –40˚C (–40˚F).
- If there is short circuit, the scan tool indicates 140˚C (284˚F) or more.

NG → **–40˚C (–40˚F) ... Go to step 2.**
140˚C (284˚F) or more ... Go to step 4.

OK

Check for intermittent problems
(See page DI–194).

2	Check for open in wire harness.

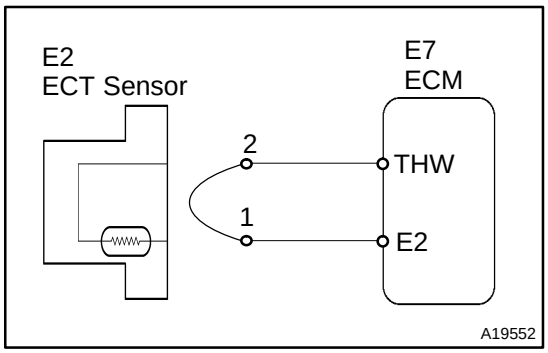

PREPARATION:

(a) Disconnect the engine coolant temperature sensor connector.

(b) Connect the sensor wire harness terminals together.

(c) Turn the ignition switch ON.

CHECK:

Read the temperature value on the scan tool.

OK:

Temperature value: 140°C (284°F) or more

OK	Confirm good connection at sensor. If OK, replace engine coolant temperature sensor.

NG

3	Check for open in ECM.

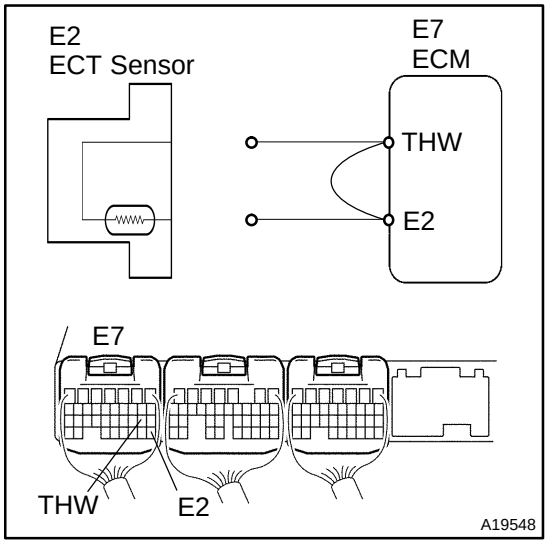

PREPARATION:

(a) Remove the glove compartment (See page SF–55).

(b) Connect a jamper wire between the terminals THW and E2 of the ECM connector.

HINT:

The engine coolant temperature sensor connector is disconnected.

(c) Turn the ignition switch ON.

CHECK:

Read the temperature value on the scan tool.

OK:

Temperature value: 140°C (284°F) or more

OK	Open in harness between terminal E2 or THW, repair or replace harness.

NG

Confirm good connection at ECM. If OK, check and replace ECM (See page IN–27).

4	Check for short in wire harness.

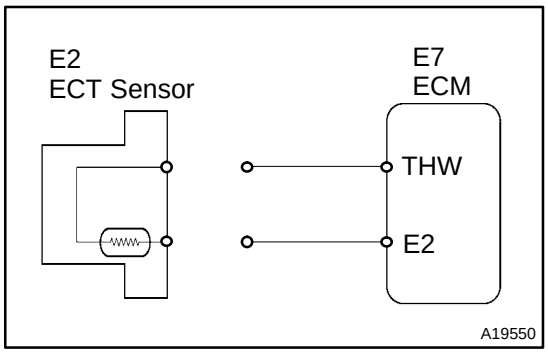

PREPARATION:

(a) Disconnect the engine coolant temperature sensor connector.

(b) Turn the ignition switch ON.

CHECK:

Read the temperature value on the scan tool.

OK:

Temperature value: –40°C (–40°F)

OK	Replace engine coolant temperature sensor.

NG

5	Check for short in ECM.

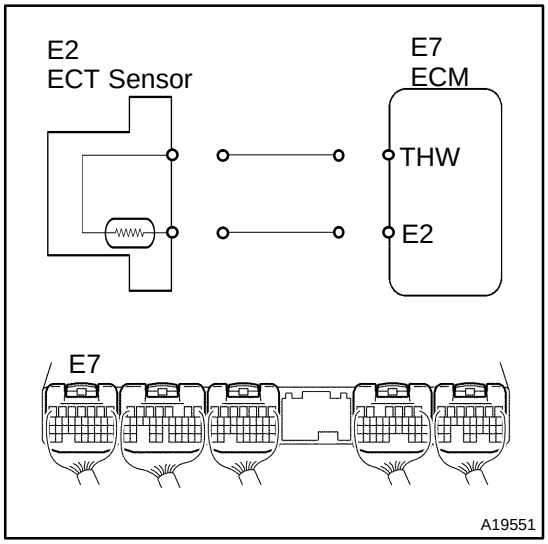

PREPARATION:

(a) Remove the glove compartment (See page SF–55).

(b) Disconnect the E7 connector from the ECM.

HINT:

The engine coolant temperature sensor connector is disconnected.

(c) Turn the ignition switch ON.

CHECK:

Read the temperature value on the scan tool.

OK:

Temperature value: –40°C (–40°F)

OK	Repair or replace harness or connector.

NG

Check and replace ECM (See page IN–27).

DIA82–01

DTC	P0116	Engine Coolant Temperature Circuit Range/ Performance Problem

DTC	P0125	Insufficient Coolant Temperature for Closed Loop Fuel Control

CIRCUIT DESCRIPTION

Refer to DTC P0115 on page DI–229.

DTC No.	DTC Detection Condition	Trouble Area
P0116	When THW ⍰ 35˚C (95˚F) and 60˚C (140˚F), THA < –6.7˚C (19.4˚F) when starting engine, conditions (a) and (b) continue: (2 trip detection logic) (a) Vehicle speed is changing (Not stable) (b) Engine coolant temp. change is lower than 3˚C (37.4˚F) from water temp. since when starting engine	▲Cooling system ▲Engine coolant temp. sensor
	In case that reading value of water temp. sensor will not change more than 1˚C (33.8˚F) even after repeating 6 trips (detection logic) of adjusting speed pattern with THW more than 60˚C (140˚F) when starting engine	
P0125	If THW < –6.7˚C (20˚F) or THA < –6.7˚C (20˚F) 20 min. or more after starting engine, engine coolant temp. sensor value is 20˚C (68˚F) or less (2 trip detection logic)	
	If THW ⍰ –6.7˚C (20˚F) and THA < –6.7˚C (20˚F) and 10˚C (50˚F) at engine start, 5 min. or more after starting engine, engine coolant temp. sensor value is 20˚C (46˚F) or less (2 trip detection logic)	
	If THW < 10˚C (50˚F) and THA < 10˚C (50˚F) at engine start, 2 min. or more after starting engine, engine coolant temp. sensor value is 20˚C (46˚F) or less (2 trip detection logic)	

INSPECTION PROCEDURE

HINT:

- ▲ If DTCs P0115, P0117, P0116, P0118 and P0125 are output simultaneously, engine coolant temperature sensor circuit may be open. Perform the troubleshooting of DTC P0115 first.
- ▲ Read freeze frame data using hand–held tester or OBD II scan tool, as freeze frame data records the engine conditions when a malfunction is detected. When troubleshooting, it is useful for determining whether the vehicle was running or stopped, the engine was warmed up or not, the air–fuel ratio was lean or rich, etc. at the time of the malfunction.

1	Are there any other codes (besides DTC P0116, P0125) being output?

YES → Go to relevant DTC chart (See page DI–194).

NO

2	Check thermostat (See page CO–12).

NG → Replace thermostat.

OK →

Replace engine coolant temperature sensor.

DTC	P0120	Throttle/Pedal Position Sensor/Switch ”A” Circuit

DTC	P0122	Throttle/Pedal Position Sensor/Switch ”A” Circuit Low Input

DTC	P0123	Throttle/Pedal Position Sensor/Switch ”A” Circuit High Input

DTC	P0220	Throttle/Pedal Position Sensor/Switch ”B” Circuit

DTC	P0222	Throttle/Pedal Position Sensor/Switch ”B” Circuit Low Input

DTC	P0223	Throttle/Pedal Position Sensor/Switch ”B” Circuit High Input

DTC	P2135	Throttle/Pedal Position Sensor/Switch ”A”/”B” Voltage Correction

CIRCUIT DESCRIPTION

HINT:

- ▲ This is repair procedure of ”throttle position sensor”.
- ▲ This electrical throttle system is no used throttle cable.
- ▲ This throttle position sensor is non–contact type.

The throttle position sensor is mounted on the throttle body to detect the opening angle of the throttle valve. Since this sensor is electronically controlled with hall elements, accurate control and reliability can be obtained. It has 2 sensors to detect the throttle opening angle and a malfunction of the throttle position sensor. The voltage applied to the terminals VTA1 and VTA2 of the ECM changes between 0 V and 5 V in proportion to the opening angle of the throttle valve. The VTA1 is a signal to indicate the actual throttle valve opening angle which is used for the engine control, and the VTA2 is a signal to indicate the information about the opening angle which is used for detecting a malfunction.

The ECM judges the current opening angle of the throttle valve from these signals input from terminals VTA1 and VTA2, and the ECM controls the throttle motor to make the throttle valve angle properly in response to the driving condition.

If this DTCs is stored, the throttle valve is locked at a certain opening angle.

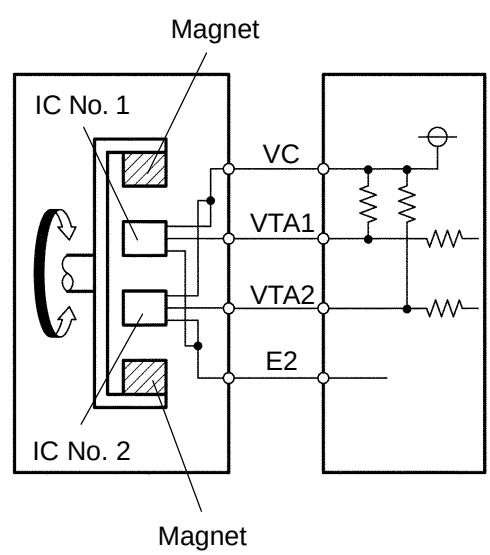

A19755

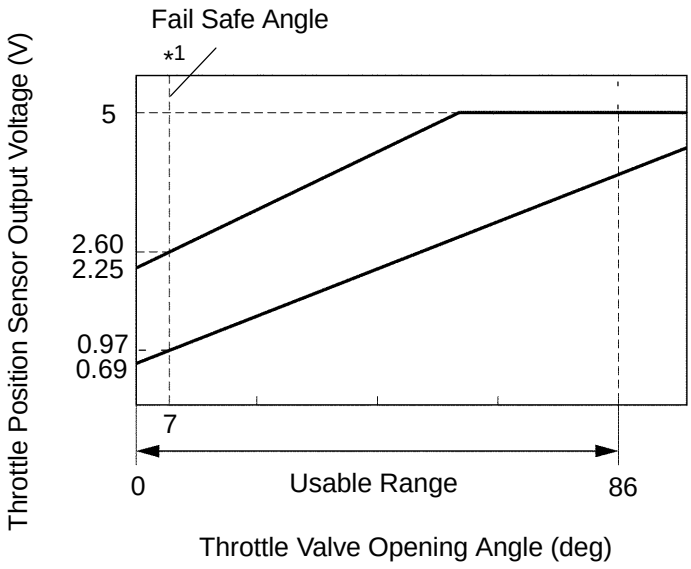

A19802

Throttle Valve Fully Closed
(Throttle Position Opening Position Expressed as Percentage
(VAT1) 0 – 20 %)

Throttle Valve Fully Opened
(Throttle Position Opening Position Expressed as Percentage
(VAT1) 64 – 96 %)

*1 : Fail Safe Angle 7°
(Throttle Position Opening Position Expressed as Percentage
(VAT1) 8 – 20 %)

DTC No.	DTC Detection Condition	Main trouble
Condition (a) of DTC P0120, P0122, P0123, P0220, P0222 or P0223 continues for 10 sec. when Idle is ON, but for 2 sec. when Idle is OFF (Open short in throttle position sensor circuit)		
P0122	(a) VTA1 < 0.2 V	▲Throttle position sensor ▲VTA1 circuit short ▲VC circuit open ▲ECM
P0123	(a) VTA1 > 4.8 V	▲Throttle position sensor ▲VTA1 circuit open ▲E2 circuit open ▲VC and VTA1 circuit are short circuited ▲ECM
P0120	Detection conditions for DTCs P0122 and P0123 are not satisfied but condition (a) is satisfied (a) VTA1 < 0.2 V or VTA1 > 4.8 V	▲Throttle position sensor ▲ECM
P0222	(a) VTA2 < 0.5 V	▲Throttle position sensor ▲VTA2 circuit short ▲VC circuit open ▲ECM
P0223	(a) VTA2 > 4.8 V and 0.2 < VTA1 < 1.8 V	▲Throttle position sensor ▲VTA2 circuit open ▲E2 circuit open ▲VC and VTA2 circuit are short circuited ▲ECM
P0220	Detection conditions for DTCs P0222 and P0223 are not satisfied but condition (a) is satisfied (a) VTA2 < 0.5 V or VTA2 > 4.8 V and 0.2 < VTA1 < 1.8 V	▲Throttle position sensor ▲ECM
P2135	Condition (a) continues for 0.5 sec. or more, or condition (b) continues for 0.4 sec. or more: (a) |VTA1 – VTA2| < 0.02 V (b) VTA1 < 0.2 V and VTA2 < 0.5 V	▲VTA1 and VTA2 circuit are short–circuited ▲Throttle position sensor ▲ECM

NOTICE:

When a malfunction is detected, the throttle valve is locked at a certain opening angle. Also, the whole electronically controlled throttle operation is cancelled until the system returns to normal and the ignition switch is turned OFF.

HINT:

- ▲ After confirming DTCs use the hand–held tester or the OBD II scan tool to confirm the throttle valve opening percentage and closed throttle position switch condition.
- ▲ The THROTTLE POS means VTA1 signal as well as the THROTTLE POS #2 for the VTA2 signal.

Reference (Normal condition):

Tester display	Accelerator fully pedal released	Accelerator pedal fully depressed
THROTTLE POS	6 – 20 %	64 – 96 %
THROTTLE POS #2	2.15 – 3.05 V	4.5 – 5.5 V

WIRING DIAGRAM

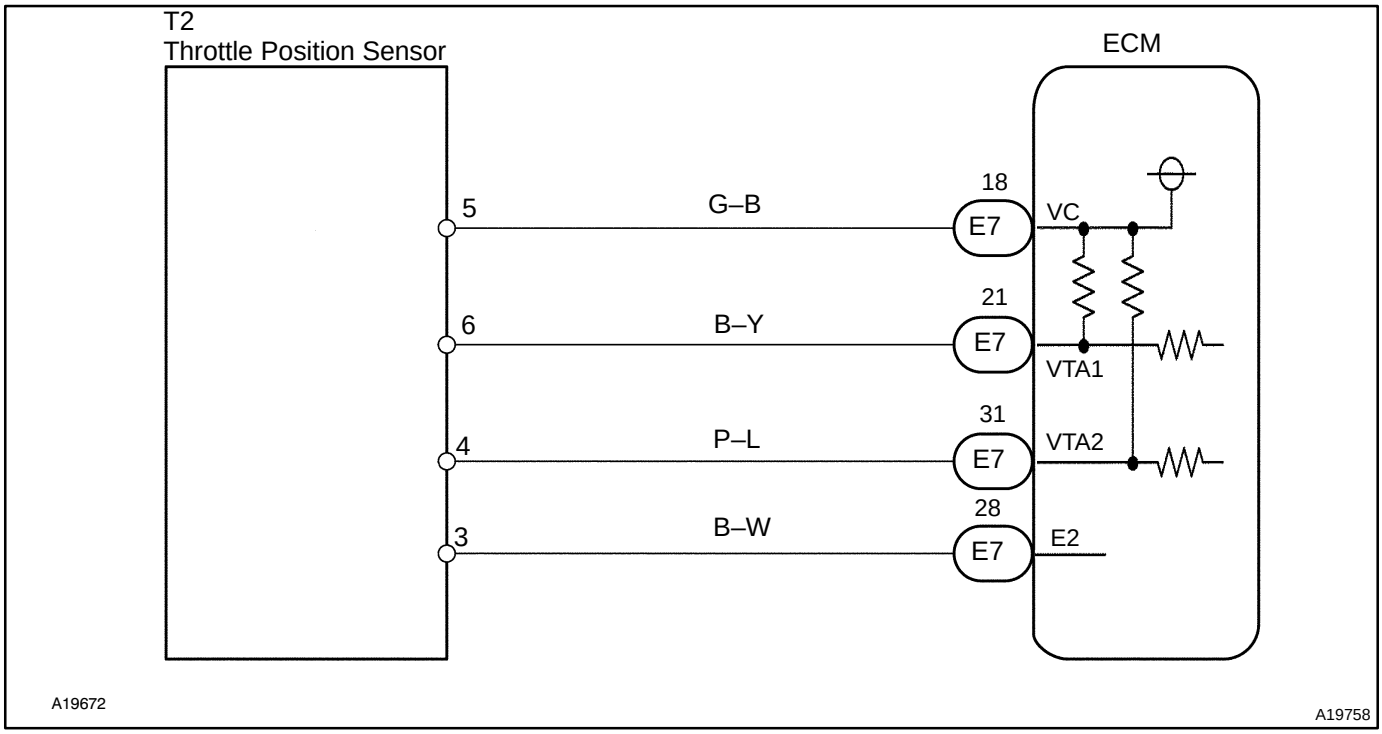

INSPECTION PROCEDURE

HINT:

- If different DTCs that are related to different systems are output simultaneously while terminal E2 is used as a ground terminal, terminal E2 may be open.
- Read freeze frame data using hand–held tester or OBD II scan tool, as freeze frame data records the engine conditions when a malfunction is detected. When troubleshooting, it is useful for determining whether the vehicle was running or stopped, the engine was warmed up or not, the air–fuel ratio was lean or rich, etc. at the time of the malfunction.

Hand–held tester:

1	**Connect hand–held tester, and read the voltage for throttle position sensor data.**

PREPARATION:

(a) Connect the hand–held tester to the DLC3.

(b) Turn the ignition switch ON and push the hand–held tester main switch ON.

CHECK:

Read the voltage for the accelerator pedal position sensor data.

OK:

Result:

Throttle position expressed as percentage and voltage				Trouble area	Proceed to
Accelerator pedal released		Accelerator pedal depressed			
THROTTLE POS (VTA1)	THROTTLE POS #2 (VTA2)	THROTTLE POS (VTA1)	THROTTLE POS #2 (VTA2)		
0 %	0 – 0.2 V	0 %	0 – 0.2 V	VC circuit open	A
100 %	4.5 – 5.5 V	100 %	4.5 – 5.5 V	E2 circuit open	
0 % or 100 %	2.15 – 3.05 V (Fail safe)	0 % or 100 %	2.15 – 3.05 V (Fail safe)	VTA1 circuit open or ground short	
6 – 20 % (Fail safe)	0 – 0.2 or 4.5 – 5.5 V	6 – 20 % (Fail safe)	0 – 0.2 or 4.5 – 5.5 V	VTA2 circuit open or ground short	
6 – 20 %	2.15 – 3.05 V	64 – 96 % (Does not fail safe)	4.5 – 5.5 V (Does not fail safe)	Throttle position sensor circuit is normal	B

B → **Go to step 5.**

A

2	**Check for open and short in harness and connector in VC, VTA1, VTA2 and E2 circuits between ECM and throttle position sensor (See page IN–27).**

NG → **Repair or replace harness and connector.**

OK

3	Check voltage between terminals VC and E2 of ECM connector.

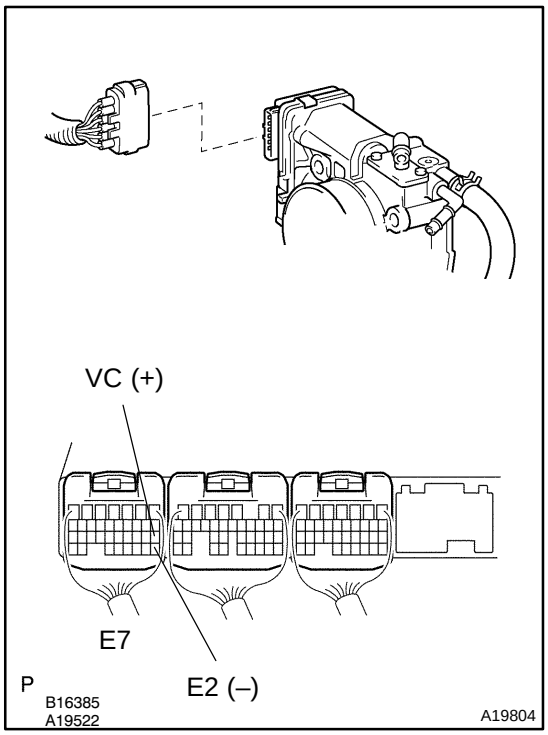

PREPARATION:

(a) Remove the glove compartment (See page SF–55).
(b) Turn the ignition switch ON.
(c) Disconnect the throttle position sensor connnecor.

CHECK:

Measure the voltage between terminals VC and E2 of the ECM connector.

OK:

Voltage: 4.5 – 5.5 V

NG → **Check and replace ECM (See page IN–27).**

OK ↓

4	Replace throttle body (See page SF–32).

GO ↓

5	**Check if DTC output recur.**

PREPARATION:

(a) Connect the hand–held tester to the DLC3.
(b) Disconnect the battery terminals or remove the EFI fuse (Clear DTCs).
(c) Start the engine.
(d) Drive the engine at idle for 15 sec. or more.

CHECK:

Read the DTC output.

OK:

No DTC output.

OK → **System is OK.**

NG

Check and replace ECM (See page IN–27).

OBD II scan tool (excluding hand–held tester):

1	**Check for open and short in harness and connector in VC, VTA1, VTA2 and E2 circuits between ECM and throttle position sensor (See page IN–27)**

NG → **Repair or replace harness and connector.**

OK

2	Check voltage between terminals VC and E2 of ECM connector.

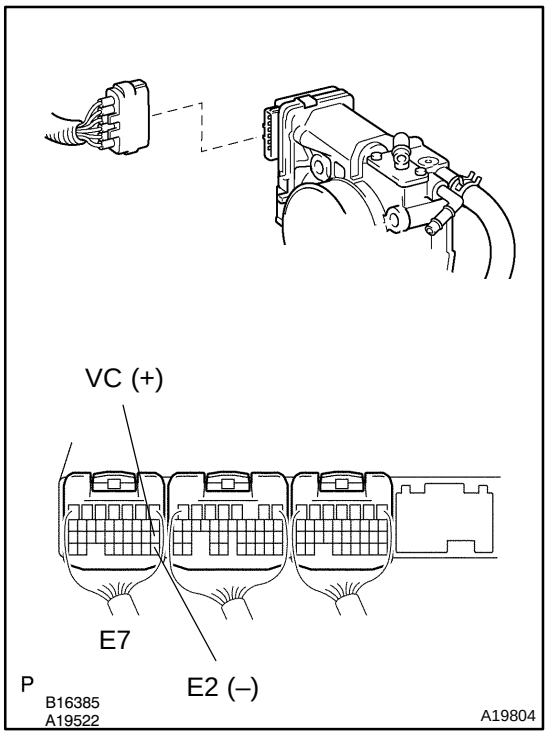

PREPARATION:

(a) Remove the glove compartment (See page SF–55).
(b) Turn the ignition switch ON.
(c) Disconnect the throttle position sensor connnecor.

CHECK:

Measure the voltage between terminals VC and E2 of the ECM connector.

OK:

Voltage: 4.5 – 5.5 V

NG → **Check and replace ECM (See page IN–27).**

OK

3	Replace throttle body (See page SF–32).

GO

4	**Check if DTC output recur.**

PREPARATION:

(a) Connect the hand–held tester to the DLC3.
(b) Disconnect the battery terminals or remove the EFI fuse (Clear DTCs).
(c) Start the engine.
(d) Drive the engine at idle for 15 sec. or more.

CHECK:

Read the DTC output.

OK:

No DTC output.

OK → **System is OK.**

NG

Check and replace ECM (See page IN–27).

DTC	P0121	Throttle Pedal Position Sensor/Switch ”A” Circuit Range/Performance Problem

CIRCUIT DESCRIPTION

Refer to DTC P0120 on page DI–235.

DTC No.	DTC Detection Condition	Trouble Area
P0121	Condition (a) continues for 2.0 seconds (when engine is under heavy load) or 10 seconds (when engine is idling or engine is not under heavy load): (a) Difference between VTA and VTA2 is out of threshold	▲Throttle position sensor

INSPECTION PROCEDURE

HINT:

Read freeze frame data using hand–held tester or OBD II scan tool, as freeze frame data records the engine conditions when a malfunction is detected. When troubleshooting, it is useful for determining whether the vehicle was running or stopped, the engine was warmed up or not, the air–fuel ratio was lean or rich, etc. at the time of the malfunction.

Replace throttle body (See page SF–32).

DIA84–01

DTC	P0128	Coolant Thermostat (Coolant Temperature Below Thermostat Regulating Temperature)

CIRCUIT DESCRIPTION

If the water temperature doesn't reach 75˚C (167˚F) even after warming up, it is abnormal.

DTC No.	DTC Detection Condition	Trouble Area
P0128	Conditions (a), (b) and (c): (a) Cold start (b) After engine is warmed up (c) Engine coolant temp. < 75˚C (167˚F)	▲Thermostat ▲Cooling system ▲Engine coolant temp. sensor ▲ECM

INSPECTION PROCEDURE

HINT:

Read freeze frame data using the hand–held tester or OBD II scan tool, as freeze frame data records the engine conditions when a malfunction is detected. When troubleshooting, it is useful for determining whether the vehicle was running or stopped, the engine was warmed up or not, the air–fuel ratio was lean or rich, etc. at the time of the malfunction.

1	**Check thermostat (See page CO–12).**

NG → **Replace thermostat.**

YES

2	**Are there any other codes (besides DTC P0128) being output?**

YES → **Go to relevant DTC chart (See page DI–205).**

NG

Check and replace ECM (See page IN–27).

DIA85–01

DTC	P0130	Oxygen Sensor Circuit (Bank 1 Sensor 1)

DTC	P0150	Oxygen Sensor Circuit (Bank 2 Sensor 1)

DTC	P2195	Oxygen Sensor Signal Stuck Lean (Bank 1 Sensor 1)

DTC	P2196	Oxygen Sensor Signal Stuck Rich (Bank 1 Sensor 1)

DTC	P2197	Oxygen Sensor Signal Stuck Lean (Bank 2 Sensor 1)

DTC	P2198	Oxygen Sensor Signal Stuck Rich (Bank 2 Sensor 1)

CIRCUIT DESCRIPTION

To obtain a high purification rate of the CO, HC and NOx components of the exhaust gas, a three–way catalytic converter is used. But, for the most efficient use of the three–way catalytic converter, the air–fuel ratio must be precisely controlled so that it is always close to the stoichiometric air–fuel ratio.

The oxygen sensor has the characteristic whereby its output voltage changes suddenly in the vicinity of the stoichiometric air–fuel ratio. This is used to detect the oxygen concentration in the exhaust gas and provide the ECM with feedback to control the air–fuel ratio.

When the air–fuel ratio becomes LEAN, the oxygen concentration in the exhaust gas increases. And the oxygen sensor informs the ECM of the LEAN condition (small electromotive force: <0.45 V).

When the air–fuel ratio is RICHER than the stoichiometric air–fuel ratio, the oxygen concentration in the exhaust gas is reduced. And the oxygen sensor informs the ECM of the RICH condition (large electromotive force: >0.45 V). The ECM judges by the electromotive force from the oxygen sensor whether the air–fuel ratio is RICH or LEAN and controls the injection time accordingly. However, if the malfunction of the oxygen sensor causes an output of abnormal electromotive force, the ECM becomes unable to perform the accurate air–fuel ratio control. The heated oxygen sensors include a heater which heats the zirconia element. The heater is controlled by the ECM. When the intake air volume is low (temperature of the exhaust gas is low), current flows to the heater in order to heat the sensor for the accurate oxygen concentration detection.

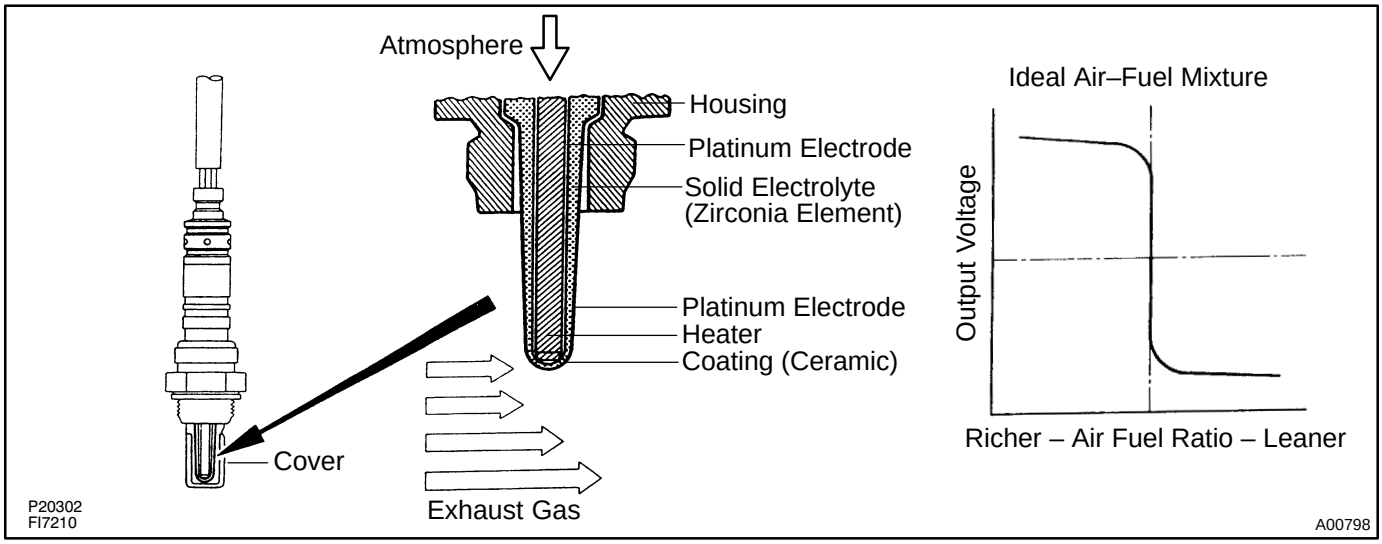

DTC No.	DTC Detection Condition	Trouble Area
P0130 P0150 P2195 P2196 P2197 P2198	Output voltage of heated oxygen sensor remains at 0.4 V or less, or 0.55 V or less, during idling after engine is warmed up (2 trip detection logic)	▲Open or short in heated oxygen sensor circuit ▲Heated oxygen sensor ▲Air induction system ▲Fuel pressure ▲Injector ▲ECM

HINT:

- ▲ Bank 1 refers to the bank that includes cylinder No.1.
- ▲ Bank 2 refers to the bank that does not include cylinder No.1.
- ▲ Sensor 1 refers to the sensor being closest to the engine body.
- ▲ The heated oxygen sensor's output voltage and the short–term fuel trim value can be read using the OBD II scan tool or the hand–held tester.

WIRING DIAGRAM

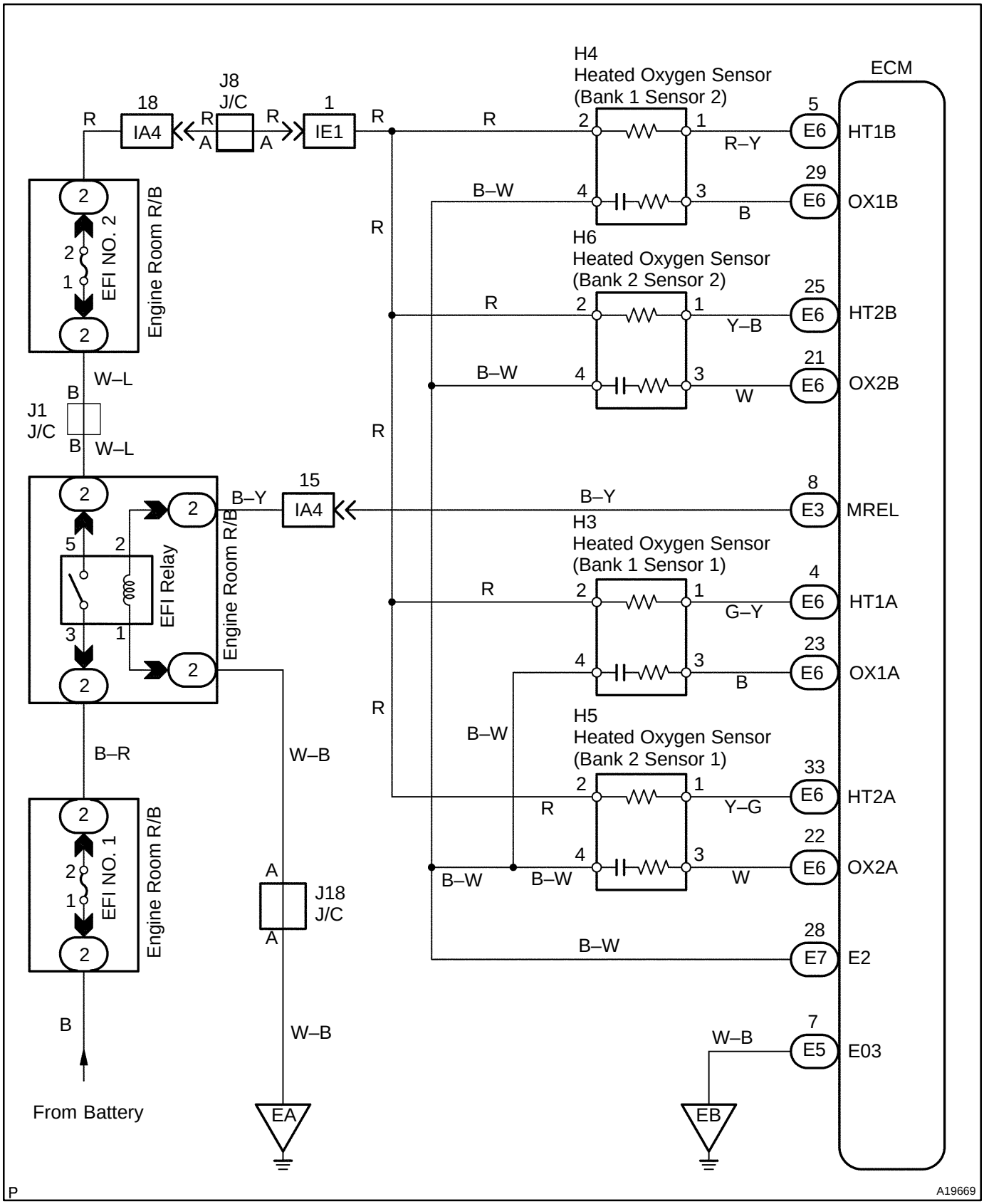

CONFIRMATION DRIVING PATTERN

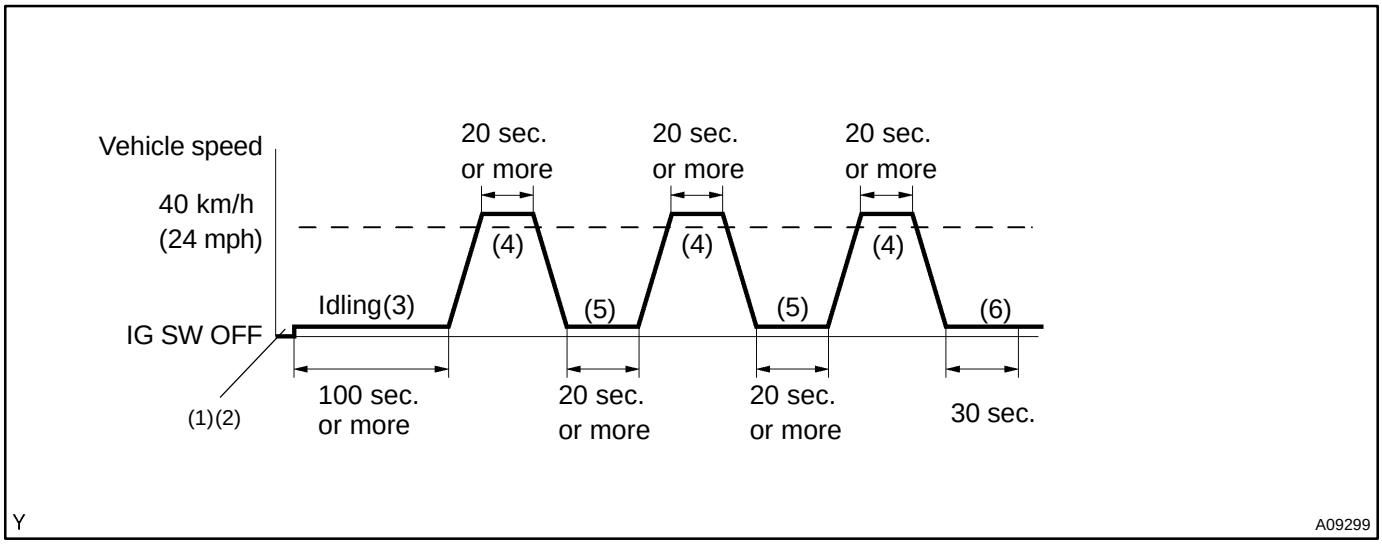

(1) Connect the hand–held tester to the DLC3.
(2) Switch the hand–held tester from the normal mode to the check (test) mode (See page DI–194).
(3) Start the engine and let the engine idle for 120 seconds or more.
(4) Drive the vehicle at 40 km/h (24 mph) or more for 20 seconds or more.
(5) Let the engine idle for 20 seconds or more.
(6) Let the engine idle for 30 seconds.

HINT:
If a malfunction exists, the MIL will light up during step (6).

NOTICE:
If the conditions in this test are not strictly followed, detection of the malfunction will be impossible.
If you do not have the hand–held tester, turn the ignition switch OFF after performing steps (3) to (6) once, then perform steps (3) to (6) again.

INSPECTION PROCEDURE

HINT:

- If different DTCs that are related to different systems are output simultaneously while terminal E2 is used as a ground terminal, terminal E2 may be open.
- Read freeze frame data using hand–held tester or OBD II scan tool, as freeze frame data records the engine conditions when a malfunction is detected. When troubleshooting, it is useful for determining whether the vehicle was running or stopped, the engine was warmed up or not, the air–fuel ratio was lean or rich, etc. at the time of the malfunction.

1	**Are there any other codes (besides DTC P0130 or P0150) being output?**

YES → **Go to relevant DTC chart.**

NO

2	**Check output voltage of heated oxygen sensor during idling.**

PREPARATION:

Warm up the heated oxygen sensor with the engine speed at 2,500 rpm for approximately 90 seconds.

CHECK:

Use the OBD II scan tool or hand–held tester to read the output voltage of the heated oxygen sensor during idling.

OK:

Heated oxygen sensor output voltage:

Alternates repeatedly between less than 0.4 V and more than 0.55 V (See the following table).

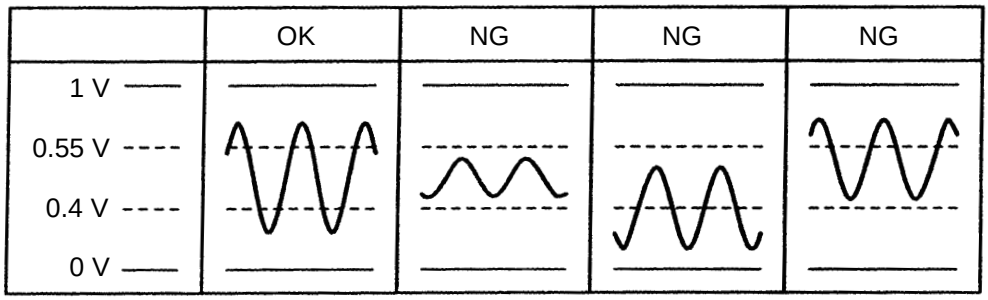

OK → **Go to step 7.**

NG

3	**Check for open and short in harness and connector between ECM and heated oxygen sensor (See page IN–27).**

NG → **Repair or replace harness or connector.**

OK

4	**Check air induction system (See page SF–1).**

NG → **Repair or replace.**

OK

5	Check fuel pressure (See page SF–7).

NG → Check and repair fuel pump, pressure regulator, fuel pipe line and filter (See page SF–1).

OK →

6	Check injector injection (See page SF–21).

NG → Replace injector.

OK →

Replace heated oxygen sensor.

7	Perform confirmation driving pattern.

Go →

8	Is there DTC P0130 or P0150 being output again?

NO → Check for intermittent problems (See page DI–194).

YES →

Check and replace ECM (See page IN–27).

DI66A–03

DTC	P0133	Oxygen Sensor Circuit Slow Response (Bank 1 Sensor 1)

DTC	P0153	Oxygen Sensor Circuit Slow Response (Bank 2 Sensor 1)

CIRCUIT DESCRIPTION

Refer to DTC P0130 on page DI–246.

DTC No.	DTC Detection Condition	Trouble Area
P0133 P0153	Response time for heated oxygen sensor's output voltage to change from rich to lean, or from lean to rich, is 1.1 sec. or more during idling after engine is warmed up (2 trip detection logic)	▲Open or short in heated oxygen sensor circuit ▲Heated oxygen sensor ▲Air induction system ▲Fuel pressure ▲Injector ▲ECM

HINT:

- ▲ Bank 1 refers to the bank that includes cylinder No.1.
- ▲ Bank 2 refers to the bank that does not include cylinder No.1.
- ▲ Sensor 1 refers to the sensor being closest to the engine body.

WIRING DIAGRAM

Refer to DTC P0130 on page DI–246.

INSPECTION PROCEDURE

HINT:

Read freeze frame data using hand–held tester or OBD II scan tool, as freeze frame data records the engine conditions when a malfunction is detected. When troubleshooting, it is useful for determining whether the vehicle was running or stopped, the engine was warmed up or not, the air–fuel ratio was lean or rich, etc. at the time of the malfunction.

1	**Are there any other codes (besides DTC P0133 or P0153) being output?**

YES → **Go to relevant DTC chart.**

NO

2	**Check output voltage of heated oxygen sensor during idling.**

PREPARATION:

Warm up the heated oxygen sensor with the engine speed at 2,500 rpm for approx. 90 sec.

CHECK:

Use the OBD II scan tool or hand–held tester to read the output voltage of the heated oxygen sensor during idling.

OK:

Heated oxygen sensor output voltage:

Alternates repeatedly between less than 0.4 V and more than 0.55 V (See the following table).

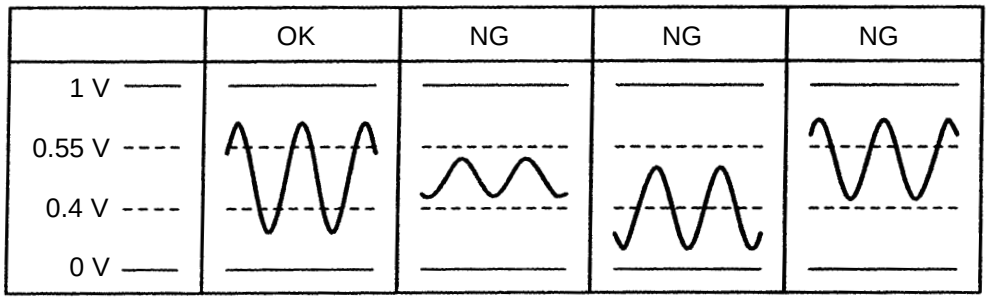

OK → **Go to step 7.**

NG

3	**Check for open and short in harness and connector between ECM and heated oxygen sensor (See page IN–27).**

NG → **Repair or replace harness or connector.**

OK

4	**Check air induction system (See page SF–1).**

NG → **Repair or replace.**

OK

5	Check fuel pressure (See page SF–7).

NG → Check and repair fuel pump, pressure regulator, fuel pipe line and filter (See page SF–1).

OK ↓

6	Check injector injection (See page SF–21).

NG → Replace injector.

OK ↓

Replace heated oxygen sensor.

7	Perform confirmation driving pattern (See page DI–246).

Go ↓

8	Is there DTC P0133 or P0153 being output again?

NO → Check for intermittent problems (See page DI–194).

YES ↓

Check and replace ECM (See page IN–27).

DIA86–01

DTC	P0134	Oxygen Sensor Circuit No Activity Detected (Bank 1 Sensor 1)

DTC	P0154	Oxygen Sensor Circuit No Activity Detected (Bank 2 Sensor 1)

CIRCUIT DESCRIPTION

DTC No.	DTC Detection Condition	Trouble Area
P0134 P0154	After engine is warmed up, heated oxygen sensor (bank 1, 2 sensor 1) output does not indicate RICH (<0.45 V) even once when conditions (a), (b), (c) and (d) continue for at least 65 sec. (a) Engine speed: 1,400 rpm or more (b) Vehicle speed: 130 km/h (81 mph) (c) Throttle valve is not fully closed (d) 180 sec. or more after starting engine	▲Open or short in heated oxygen sensor (bank 1, 2 sensor 1) circuit ▲Heated oxygen sensor (bank 1, 2 sensor 1) ▲Air induction system ▲Fuel system ▲Injector ▲Gas leak in exhaust system ▲PCV valve and hose ▲ECM

HINT:

- ▲ After confirming DTC P0134 and P0154, use the OBD II scan tool or the hand−held tester to confirm output voltage of the heated oxygen sensor (bank 1, 2 sensor 1) from the CURRENT DATA.
- ▲ If output voltage of the heated oxygen sensor (bank 1 sensor 1) is less than 0.1 V, the heated oxygen sensor circuit may be open or short.

WIRING DIAGRAM

Refer to DTC P0130 on page DI–246.

INSPECTION PROCEDURE

HINT:

- ▲ Read freeze frame data using hand–held tester or OBD II scan tool, as freeze frame data records the engine conditions when a malfunction is detected. When troubleshooting, it is useful for determining whether the vehicle was running or stopped, the engine was warmed up or not, the air–fuel ratio was lean or rich, etc. at the time of the malfunction.
- ▲ If the vehicle runs out of fuel, the air–fuel ratio is LEAN and DTC P0134 and P0154 will be recorded. The MIL then comes on.

1	Are there any other codes (besides DTC P0134, P0154) being output?

YES → Go to relevant DTC chart.

NO

2	**Check connection of PCV valve and hose**

NG → **Repair or replace PCV valve and hose**

OK ↓

3	**Connect OBD II scan tool or hand–held tester, and read value for output voltage of heated oxygen sensor (bank 1, 2 sensor 1).**

PREPARATION:

(a) Connect the OBD II scan tool or hand–held tester to the DLC3.

(b) Warm up the engine to normal operating temperature.

CHECK:

Read the output voltage of the heated oxygen sensor when the engine is suddenly raced.

HINT:

Perform a quick racing of 4,000 rpm 3 times by using the accelerator pedal.

OK:

Heated oxygen sensor output a RICH signal (0.45 V or more) at least once.

OK → **Check and replace ECM (See page IN–27).**

NG ↓

4	**Check for open and short in harness and connector between ECM and heated oxygen sensor (bank 1, 2 sensor 1) (See page IN–27).**

NG → **Repair or replace harness or connector.**

OK ↓

5	Check whether misfire is occurred or not by monitoring DTC and data list.

NG → Perform troubleshooting for misfire (See page DI–292).

OK

6	Check air induction system (See page SF–1).

NG → Repair or replace.

OK

7	Check fuel pressure (See page SF–7).

NG → Check and repair fuel pump, pressure regulator, fuel pipe line and filter (See page SF–1).

OK

8	Check injector injection (See page SF–21)

NG → Replace injector.

OK

9	Check gas leak on exhaust system.

NG → Repair or replace.

OK →

Replace heated oxygen sensor (bank 1, 2 sensor 1).

10	Perform confirmation driving pattern (See page DI–246).

Go →

11	Is there DTC P0134 or P0154 being output again?

YES → Check and replace ECM (See page IN–27).

NO →

12	Did vehicle run out of fuel in past?

NO → Check for intermittent problems (See page DI–194).

YES →

DTC P0134 or P0154 are caused by shortage of fuel.

DTC	P0136	Oxygen Sensor Circuit Malfunction (Bank 1 Sensor 2)

DTC	P0156	Oxygen Sensor Circuit Malfunction (Bank 2 Sensor 2)

CIRCUIT DESCRIPTION

Refer to DTC P0130 on page DI–259.

DTC No.	DTC Detection Condition	Trouble Area
P0136 P0156	Output voltage of heated oxygen sensor remains at 0.4 V or more or 0.5 V or less when vehicle is driven at less than 100 km/h (62 mph) after engine is warmed up (2 trip detection logic)	▲Open or short in heated oxygen sensor circuit ▲Heated oxygen sensor

HINT:

- ▲ Bank 1 refers to the bank that includes cylinder No.1.
- ▲ Bank 2 refers to the bank that does not include cylinder No.1.
- ▲ Sensor 2 refers to the sensor being farthest from the engine body.

WIRING DIAGRAM

Refer to DTC P0130 on page DI–246.

INSPECTION PROCEDURE

HINT:

Read freeze frame data using hand–held tester or OBD II scan tool, as freeze frame data records the engine conditions when a malfunction is detected. When troubleshooting, it is useful for determining whether the vehicle was running or stopped, the engine was warmed up or not, the air–fuel ratio was lean or rich, etc. at the time of the malfunction.

1	**Are there any other codes (besides DTC P0136 or P0156) being output?**

YES → **Go to relevant DTC chart (See page DI–205).**

NO

2	**Check for open and short in harness and connector between ECM and heated oxygen sensor (See page IN–27).**

NG → **Repair or replace harness or connector.**

OK

3	**Check output voltage of heated oxygen sensor.**

PREPARATION:

(a) Connect the OBD II scan tool or hand–held tester to the DLC3.

(b) After warming up the engine, race the engine at 2,500 rpm for 3 minutes.

CHECK:

Read the output voltage of the heated oxygen sensor when the engine is suddenly raced.

HINT:

Perform a quick racing of 4,000 rpm 3 times by using the accelerator pedal.

OK:

Heated oxygen sensor output voltage: Alternates from 0.4 V or less to 0.5 V or more.

OK → **Check that each connector is properly connected.**

NG

Replace heated oxygen sensor.

DIA87–01

DTC	P0171	System too Lean (Bank 1)

DTC	P0172	System too Rich (Bank 1)

DTC	P0174	System too Lean (Bank 2)

DTC	P0175	System too Rich (Bank 2)

CIRCUIT DESCRIPTION

The fuel trim is related to the feedback compensation value, not to the basic injection time. The fuel trim includes the short–term fuel trim and the long–term fuel trim.

The short–term fuel trim is the short–term fuel compensation used to maintain the air–fuel ratio at its ideal theoretical value. The signal from the heated oxygen sensor indicates whether the air–fuel ratio is RICH or LEAN compared to the ideal theoretical value, triggering a reduction in the fuel volume if the air–fuel ratio is RICH and an increase in the fuel volume if it is.

The long–term fuel trim is the overall fuel compensation carried out in long–term to compensate for a continual deviation of the short–term fuel trim from the central value, due to individual engine differences, wear overtime and changes in the using environment.

If both the short–term fuel trim and the long–term fuel trim are LEAN or RICH beyond a certain value, it is detected as a malfunction and the MIL lights up.

DTC No.	DTC Detection Condition	Trouble Area
P0171 P0174	When air fuel ratio feedback is stable after engine warmed up, fuel trim is considerably in error on RICH side (2 trip detection logic)	▲Air induction system ▲Injector blockage ▲Mass air flow meter ▲Engine coolant temp. sensor ▲Fuel pressure ▲Gas leak on exhaust system ▲Open or short in heated oxygen sensor (bank 1, 2 sensor 1) circuit ▲Heated oxygen sensor (bank 1, 2 sensor 1) circuit ▲PCV valve and hose ▲ECM
P0172 P0175	When air fuel ratio feedback is stable after engine warmed up, fuel trim is considerably in error on LEAN side (2 trip detection logic)	▲Injector leak, blockage ▲Mass air flow meter ▲Engine coolant temp. sensor ▲Ignition system ▲Fuel pressure ▲Gas leak on exhaust system ▲Open or short in heated oxygen sensor (bank 1, 2 sensor 1) circuit ▲Heated oxygen sensor (bank 1, 2 sensor 1) circuit ▲ECM

HINT:

- When DTC P0171 and P0174 are recorded, the actual air–fuel ratio is on the LEAN side. When DTC P0172 and P0175 are recorded, the actual air–fuel ratio is on the RICH side.
- If the vehicle runs out of fuel, the air–fuel ratio is LEAN and DTC P0171and P0174 are recorded. The MIL then comes on.
- If the total of the short–term fuel trim value and long–term fuel trim value is within ± 25 %, the system is functions normally.

WIRING DIAGRAM

Refer to DTC P0130 on page DI–246.

INSPECTION PROCEDURE

HINT:

Read freeze frame data using hand–held tester or OBD II scan tool, as freeze frame data records the engine conditions when a malfunction is detected. When troubleshooting it is useful for determining whether the vehicle was running or stopped, the engine was warmed up or not, the air–fuel ratio was lean or rich, etc. at the time of the malfunction.

1	**Check air induction system (See page SF–1).**

NG → **Repair or replace.**

OK

2	**Check connection of PCV valve and hose.**

NG → **Repair or replace PCV valve and hose.**

OK

3	**Check injector injection (See page SF–21).**

NG → **Replace injector.**

OK

4	Check mass air flow meter (See page SF–28) and engine coolant temperature sensor (See page SF–43).

NG → Repair or replace.

OK

5	Check for spark and ignition (See page IG–1).

NG → Repair or replace.

OK

6	Check fuel pressure (See page SF–7).

NG → Check and repair fuel pump, pressure regulator, fuel pipe line and filter (See page SF–1).

OK

7	Check gas leak on exhaust system.

NG → Repair or replace.

OK

8	**Check output voltage of heated oxygen sensor (bank 1, 2 sensor 1) during idling.**

PREPARATION:

Warm up the heated oxygen sensor with the engine speed at 2,500 rpm for approximately 90 seconds.

CHECK:

Use the OBD II scan tool or hand–held tester to read the output voltage of the heated oxygen sensor during idling.

OK:

Heated oxygen sensor output voltage:

Alternates repeatedly between less than 0.4 V and more than 0.55 V (See the following table).

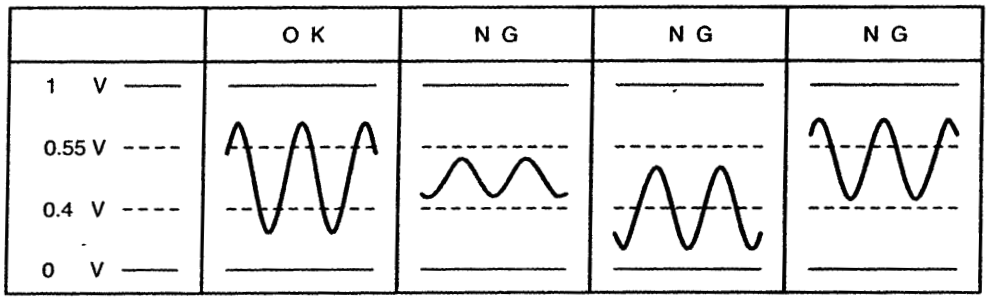

OK → **Go to step 9.**

NG

9	**Check for open and short in harness and connector between ECM and heated oxygen sensor (bank 1, 2 sensor 1) (See page IN–27).**

NG → **Repair or replace harness or connector.**

OK

Replace heated oxygen sensor.

10	Perform confirmation driving pattern (See page DI–246).

GO

11	Is there DTC P0171, P0172, P0174 or P0175 being output again?

YES → Check and replace ECM (See page IN–27).

NO

12	Did vehicle run out of fuel in past?

NO → Check for intermittent problems (See page DI–194).

YES

DTC P0171, P0172, P0174 or P0175 is caused by shortage of fuel.

DIA88–01

DTC	P0230	Fuel Pump Primary Circuit

CIRCUIT DESCRIPTION

In the diagram below, when the engine is cranked, current flows from terminal ST of the ignition switch to the starter relay coil and also current flows to terminal STA of the ECM (STA signal). When the STA signal and NE signal are input to the ECM, the Tr1 is turned on, current flows to the coil of the circuit opening relay, the relay switches on, power is supplied to the fuel pump, and the fuel pump operates. While the NE signal is generated (engine running), the ECM keeps the Tr1 on (circuit opening relay on) and the fuel pump also keeps operating. The fuel pump speed is controlled at two levels (high speed or low speed) by the condition of the engine (starting, light load, heavy load). When the engine starts (STA ON), the Tr2 in the ECM is off, so the fuel pump relay closes and battery positive voltage is applied directly to the fuel pump. The fuel pump operates at high speed. After the engine starts during idling or light loads, since the Tr2 goes on, power is supplied to the fuel pump via the fuel pump resistor. The fuel pump operates at low speed.

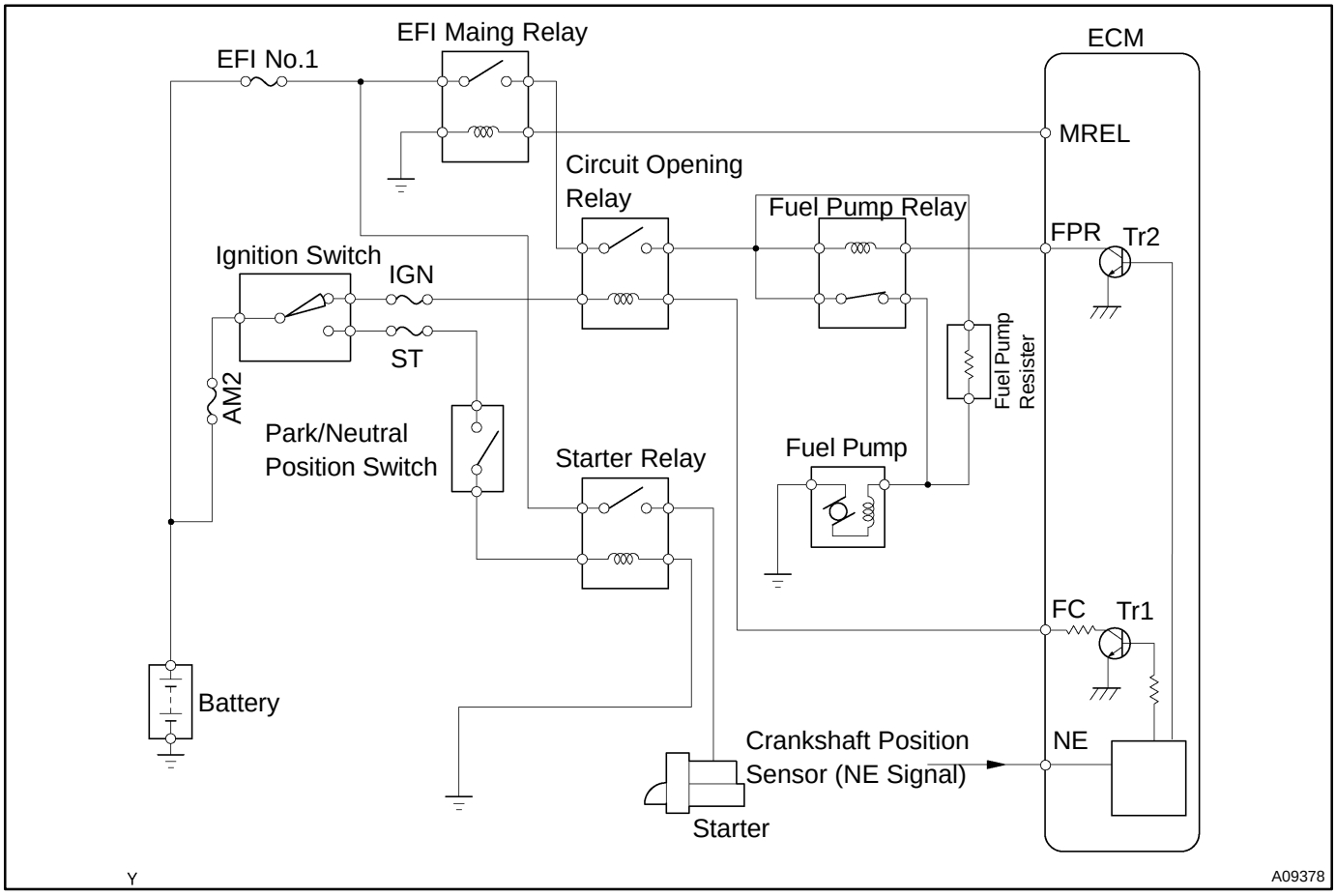

DTC No.	DTC Detection Condition	Trouble Area
P0230	Open or short in fuel pump relay circuit	▲Open or short in fuel pump relay circuit ▲Circuit opening relay ▲Fuel pump relay ▲Fuel pump ▲ECM

WIRING DIAGRAM

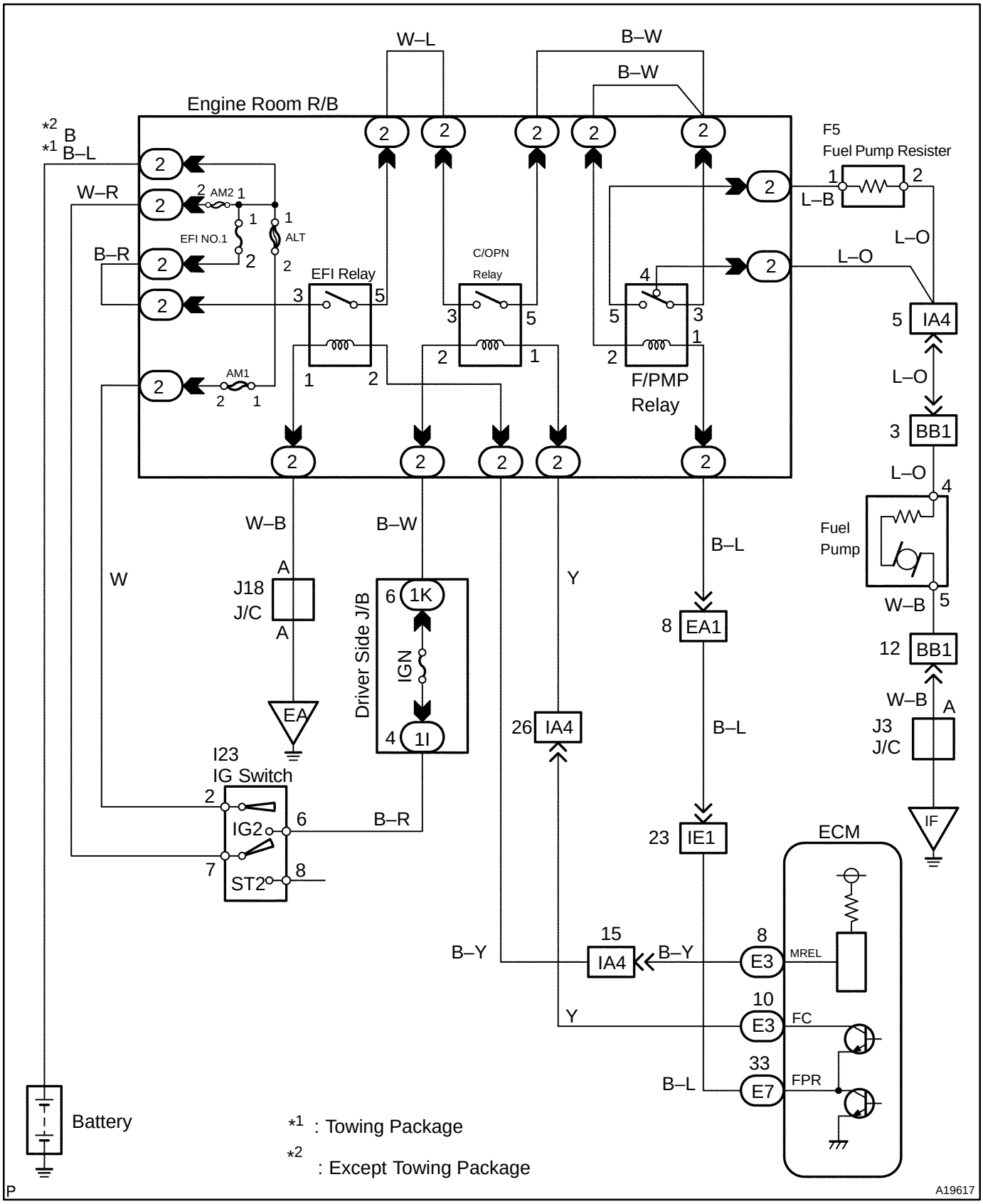

HINT:
This DTC chart is based on the premise that the engine is started. If the engine is not started, proceed to the problem symptoms table on page DI–216.

INSPECTION PROCEDURE

HINT:

Read freeze frame data using hand–held tester or OBD II scan tool, as freeze frame data records the engine conditions when a malfunction is detected. When troubleshooting, it is useful for determining whether the vehicle was running or stopped, the engine was warmed up or not, the air–fuel ratio was lean or rich, etc. at the time of the malfunction.

Hand–held tester:

1	**Connect hand–held tester, and check operation of fuel pump (See page DI–194, step 7).**

OK → **Check for starter signal circuit (See page DI–374).**

NG

2	**Check for ECM power source circuit (See page DI–370).**

NG → **Repair or replace.**

OK

3	**Check circuit opening relay (Marking: C/OPN) (See page SF–34).**

NG → **Replace circuit opening relay.**

OK

4	**Check voltage between terminal FC of ECM and body ground.**

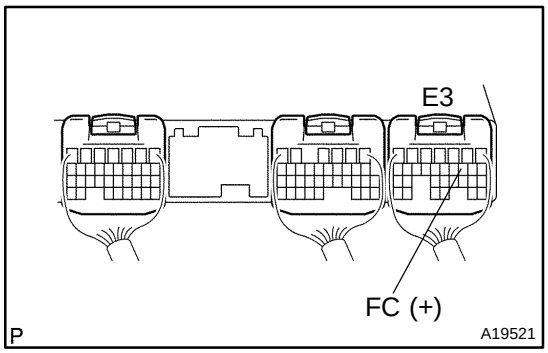

PREPARATION:

(a) Remove the glove compartment.

(b) Turn the ignition switch ON.

CHECK:

Measure the voltage between terminal FC of the ECM connector and the body ground.

OK:

Voltage: 9 – 14 V

NG → **Check for open in harness and connector between EFI main relay and circuit opening relay, and circuit opening relay and ECM.**

OK

5	**Check fuel pump (See page SF–7).**

NG → **Repair or replace fuel pump.**

OK

6	**Check for open in harness and connector between circuit opening relay and fuel pump, and fuel pump and body ground (See page IN–27).**

NG → **Repair or replace harness or connector.**

OK

Check and replace ECM (See page IN–27).

OBD II scan tool (excluding hand–held tester):

1	**Check operation of fuel pump.**

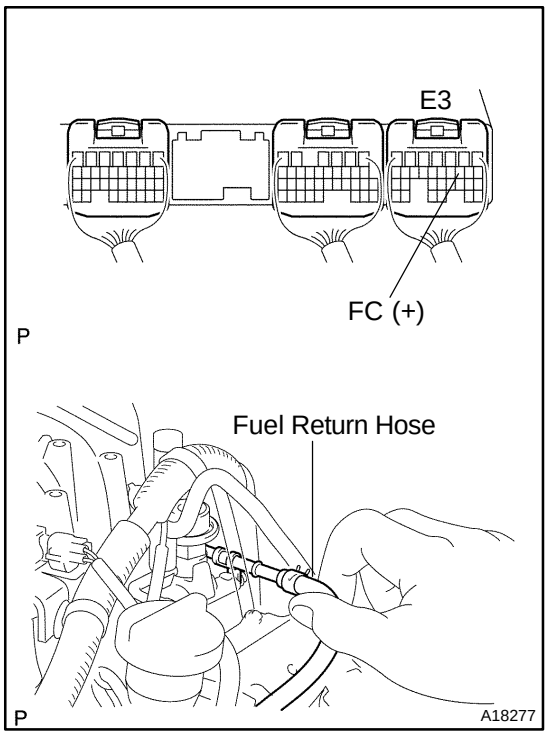

PREPARATION:

(a) Remove the glove compartment.

(b) Turn the ignition switch ON.

CHECK:

(a) Connect terminal FC of the ECM connector and the body ground.

(b) Check the fuel pressure in the return hose when it is pinched by hand.

OK:

There is pressure in the fuel return hose.

HINT:

At this time, you will hear the fuel flowing noise.

OK → **Check for starter signal circuit (See page DI–374).**

NG

2	**Check for ECM power source circuit (See page DI–370).**

NG → **Repair or replace.**

OK

3	**Check circuit opening relay (Marking: C/OPN) (See page SF–34).**

NG → **Replace circuit opening relay.**

OK

4	**Check voltage between terminals FC of ECM connector and body ground.**

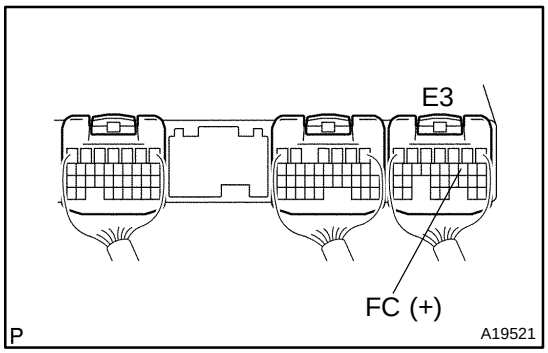

PREPARATION:

(a) Remove the glove compartment.

(b) Turn the ignition switch ON.

CHECK:

Measure the voltage between terminal FC of the ECM and the body ground.

OK:

Voltage: 9 – 14 V

NG → **Check for open in harness and connector between EFI main relay and circuit opening relay, and circuit opening relay and ECM.**

OK

5	**Check fuel pump (See page SF–7).**

NG → **Repair or replace fuel pump.**

OK

6	**Check for open in harness and connector between circuit opening relay and fuel pump, and fuel pump and body ground (See page IN–27).**

NG → **Repair or replace harness or connector.**

OK

Check and replace ECM (See page IN–27).

7	Check voltage between terminal FPR of ECM and body ground.

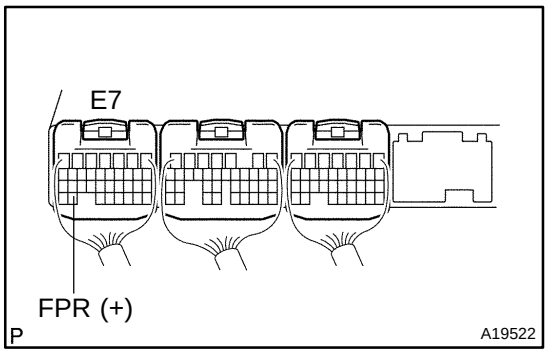

PREPARATION:

(a) Remove the glove compartment (See page SF–55).

(b) Start the engine.

CHECK:

Measure the voltage between terminal FPR of the ECM connector and the body ground while racing the engine.

OK:

Condition	Voltage
STA ON	9 – 14 V
STA OFF	0 – 3 V

OK → **Check and replace ECM (See page IN–27).**

NG

8	Check operation of fuel pump relay (Marking: C/OPN) (See page SF–35).

NG → **Replace fuel pump relay.**

OK

Repair or replace harness or connector between fuel pump relay and ECM.

DTC	P0300	Random/Multiple Cylinder Misfire Detected
DTC	P0301	Cylinder 1 Misfire Detected
DTC	P0302	Cylinder 2 Misfire Detected
DTC	P0303	Cylinder 3 Misfire Detected
DTC	P0304	Cylinder 4 Misfire Detected
DTC	P0305	Cylinder 5 Misfire Detected
DTC	P0306	Cylinder 6 Misfire Detected
DTC	P0307	Cylinder 7 Misfire Detected
DTC	P0308	Cylinder 8 Misfire Detected

CIRCUIT DESCRIPTION

Misfire: The ECM uses the crankshaft position sensor and camshaft position sensor to monitor changes in the crankshaft rotation for each cylinder.

The ECM counts the number of times the engine speed chage rate of indicates that misfire has occurred. And when the misfire rate equals to or exceeds the count of indicating that the engine condition has deteriorated, the MIL lights up.

If the misfire rate is high enough and the driving conditions will cause the catalyst to overheat, the MIL shows the occurrence of misfire by blinking.

DTC No.	DTC Detection Condition	Trouble Area
P0300	Misfiring of random cylinders is detected during any particular 200 or 1,000 revolutions 1trip detection logic: MIL to brink 2trip detection logic: MIL to light up	▲Open or short in engine wire ▲Connector connection ▲Vacuum hose connection ▲Ignition system ▲Injector ▲Fuel pressure ▲Mass air flow meter ▲Engine coolant temp. sensor ▲Compression pressure ▲Valve clearance ▲Valve timing ▲PCV valve and hose ▲ECM
P0301 P0302 P0303 P0304	For any particular 200 revolutions of engine, misfiring is detected which can cause catalyst to overheat (This causes MIL to blink)	
P0305 P0306 P0307 P0308	For any particular 1,000 revolutions of engine, misfiring is detected which causes a deterioration in emissions (2 trip detection logic)	

HINT:

When codes for a misfiring cylinder are recorded repeatedly but no random misfire code is recorded, it indicates that the misfires have been detected and recorded at different times.

WIRING DIAGRAM

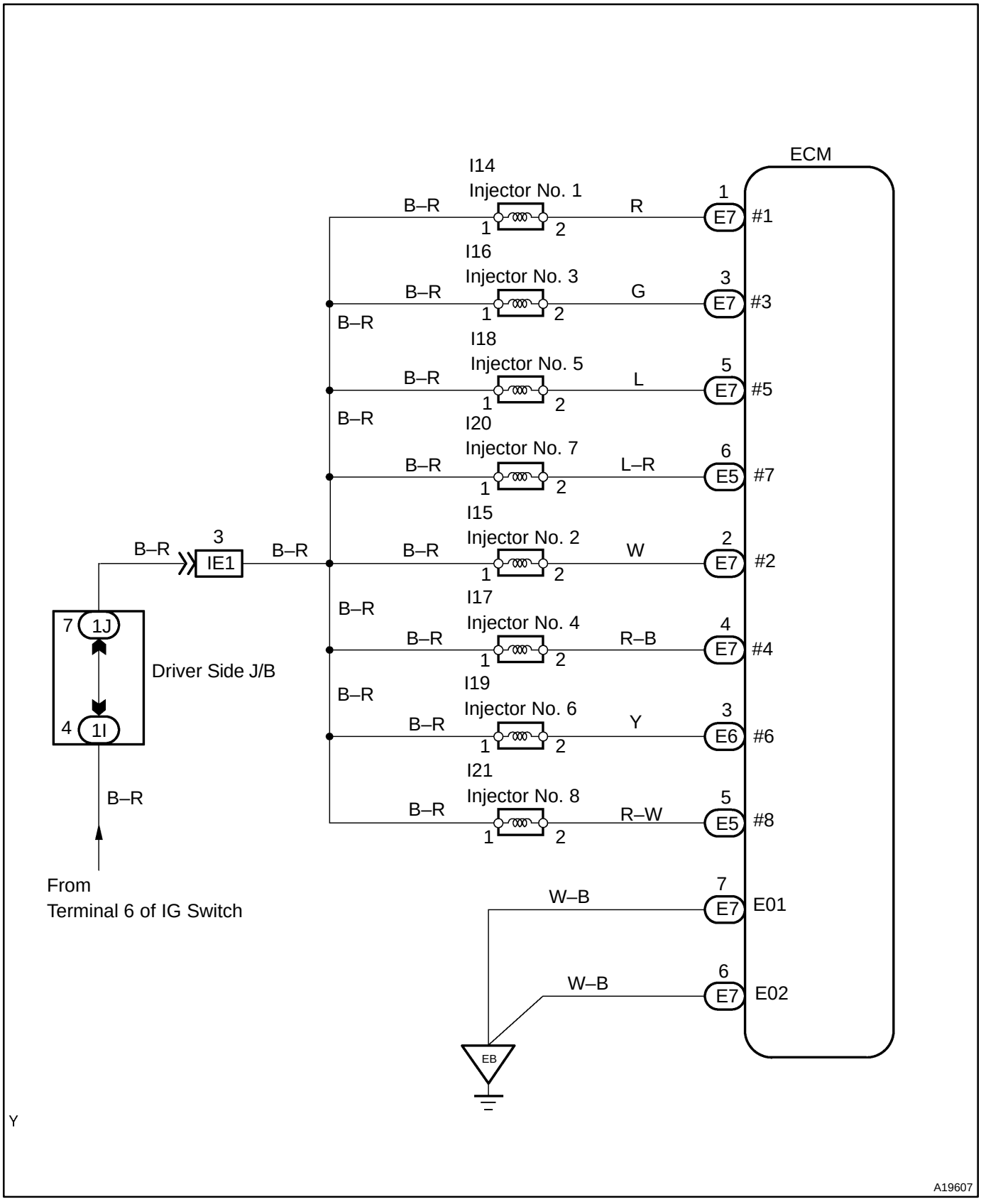

CONFIRMATION DRIVING PATTERN

(a) Connect the hand–held tester or the OBD II scan tool to the DLC3.
(b) Record DTC and freeze frame data.
(c) Use the hand–held tester to set to the check mode (See page DI–194).
(d) Read the value on the misfire counter for each cylinder when idling. If the value is displayed on the misfire counter, skip the following procedure of confirmation driving.
(e) Drive the vehicle several times with the engine speed, load and its surrounding range shown with ENGINE SPD, CALC LOAD in the freeze frame data or MISFIRE RPM, MISFIRE LOAD in the data list. If you have no hand–held tester, turn the ignition switch OFF after the symptom is simulated once. Then repeat the simulation process again.

HINT:
In order to memorize the DTC of misfire, it is necessary to drive around MISFIRE RPM, MISFIRE LOAD for the following period of time in the data list.

Engine Speed	Time
Idling	3 minutes 30 seconds or more
1,000 rpm	3 minutes or more
2,000 rpm	1 minute 30 seconds or more
3,000 rpm	1 minute or more

(f) Check whether there is misfire or not by monitoring DTC and freeze frame data. After that, record them.
(g) Turn the ignition switch OFF and wait at least 5 seconds.

INSPECTION PROCEDURE

HINT:
▲ If DTCs besides misfire are memorized simultaneously, first perform the troubleshooting for them.
▲ Read freeze frame data using hand–held tester or OBD II scan tool, as freeze frame data records the engine conditions when a malfunction is detected. When troubleshooting it is useful for determining whether the vehicle was running or stopped, the engine was warmed up or not, the air–fuel ratio was lean or rich, etc. at the time of the malfunction.
▲ If the misfire does not occur when the vehicle is brought to the workshop, misfire can be confirmed by reproducing the condition of the freeze frame data. Also after finishing the repair, confirm that there is no misfire (See confirmation driving pattern).
▲ On 6 and 8 cylinder engines, misfiring cylinder identification is disabled at high engine speed and only an general misfire fault code P0300 is stored instead of a cylinder specific misfire fault code (i. e., P0301 – P0308). Under the following conditions, only P0300 code may be stored.
Misfire starts in the high engine speed area or Misfire occurs only in the high engine speed area.
Therefore, when a general misfire fault code (i.e., P0300) is only stored, erase the DTCs after read freeze frame data with the hand–held tester or OBD II scan tool. Start the engine and drive the confirmation patten (See the CONFIRMATION DRIVING PATTERN) and read the value of the misfire ratio for each cylinder (or DTC). Perform the repair correspond to the high misfire ratio cylinder (or the misfiring cylinder indicated by DTC). After completing the repair, confirm no misfire is occurring by driving the confirmation pattern.
▲ When either of SHORT FT #1, LONG FT #1, SHORT FT #2 or LONG FT #2 in the freeze frame data is over the range of ± 20 %, there is a possibility that the air–fuel ratio is inclining either to RICH (–20 % or less) or LEAN (+20 % or more).
▲ When COOLANT TEMP in the freeze frame data is less than 80˚C (176˚F), there is a possibility of misfire only during warming up (the engine).
▲ If the misfire cannot be reproduced, the reason may be because of driving the vehicle with lack of fuel, use of improper fuel, a stain on the ignition plug, etc.
▲ Be sure to check the value on the misfire counter after the repair.

1	**Check wire harness and vacuum hose in engine room.**

CHECK:

Check the disconnection, piping and break of vacuum hose.

NG → **Repair or replace, then confirm that there is no misfire (See confirmation driving pattern).**

OK

2	**Check connection of PCV piping.**

NG → **Repair or replace PCV piping.**

OK

3	**Connect hand–held tester, and read the number of misfire.**

PREPARATION:

(a) Connect the hand–held tester to the DLC3.
(b) Turn the ignition switch ON and push the hand–held tester main switch ON.
(c) Start the engine.

CHECK:

Read the number of misfire on the hand–held tester.

RESULT:

High Misfire Rate Cylinder	Proceed to
1 or 2 cylinders	Type I
More than 3 cylinders	Type II

Type II → **Go to step 13.**

Type I

4	Check spark plug and spark of misfiring cylinder.

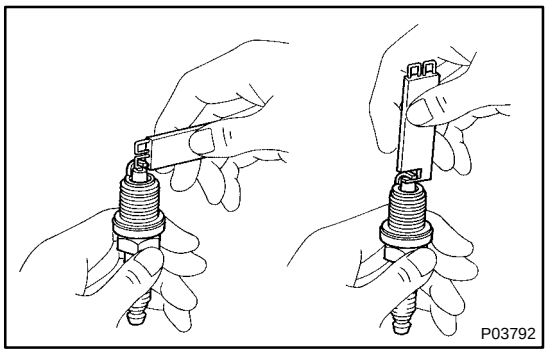

PREPARATION:

(a) Disconnect the ignition coil (See page IG–5).
(b) Remove the spark plug.

CHECK:

(a) Check the spark plug type.
(b) Check the electrode for carbon deposits.
(c) Check the electrode gap.

OK:

(a) Recommended spark plug:

DENSO made	K20R–U
NGK made	BKR6EYA

(b)
No large carbon deposit present.
Not wet with gasoline or oil.
(c)
Maximum electrode gap for used spark plug:
0.8 mm (0.031 in.)

PREPARATION:

(a) Disconnect the ignition coil with igniter connector, and disconnect the ignition coil with igniter (See page IG–5).
(b) Remove the spark plug.
(c) Install the spark plug to the ignition coil with igniter, and connect the ignition coil with igniter connector.
(d) Disconnect the injector connector.
(e) Ground the spark plug.

CHECK:

Check if spark occurs while the engine is being cranked.

NOTICE:

To prevent excess fuel from being injected from the injectors during this test, don't crank the engine for more than 5 – 10 seconds at a time.

OK:

Spark jumps across electrode gap.

NG → **Go to step 7.**

OK

5	**Check original spark plug and spark of misfiring cylinder.**

PREPARATION:
(a) Disconnect the spark plug.
(b) Change the normal spark plug.
(c) Install the spark plug to the ignition coil with igniter.
(d) Disconnect the injector connector.
(e) Ground the spark plug.

CHECK:
Check if spark occurs while the engine is being cranked.

NOTICE:
To prevent excess fuel from being injected from the injectors during this test, don't crank the engine for more than 5 – 10 seconds at a time.

OK:
Spark jumps across electrode gap.

OK → **Replace spark plug.**

NG

6	**Change it normal ignition coil with igniter and check spark of misfiring cylinder.**

PREPARATION:
(a) Disconnect the ignition coil with igniter connector, and disconnect the ignition coil with igniter (See page IG–5).
(b) Remove the spark plug.
(c) Change it normal ignition coil with igniter.
(d) Install the spark plug to the ignition coil with igniter, and connect the ignition coil with igniter connector.
(e) Disconnect the injector connector.
(f) Ground the spark plug.

CHECK:
Check if spark occurs while the engine is being cranked.

NOTICE:
To prevent excess fuel from being injected from the injectors during this test, don't crank the engine for more than 5 – 10 seconds at a time.

OK:
Spark jumps across electrode gap.

OK → **Replace ignition coil with igniter, then confirm that there is no misfire.**

NG

7	Check voltage of ECM terminal for injector of misfiring cylinder.

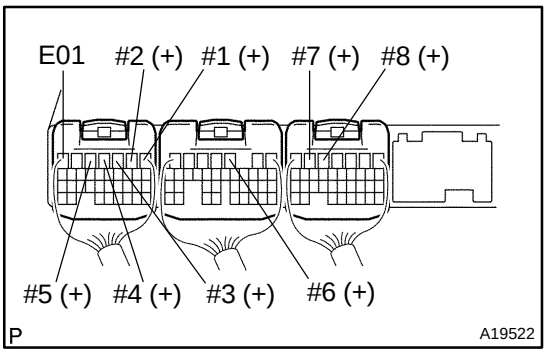

PREPARATION:

(a) Remove the glove compartment door (See page SF–55).

(b) Turn the ignition switch ON.

CHECK:

Measure the voltage between applicable terminal of the ECM connector and body ground.

OK:

Voltage: 9 – 14 V

Reference: INSPECTION USING OSCILLOSCOPE

With the engine idling, check the waveform between terminals #1 – #8 and E01 of the ECM connectors.

HINT:

The correct waveform is as shown.

Injector Signal Waveform

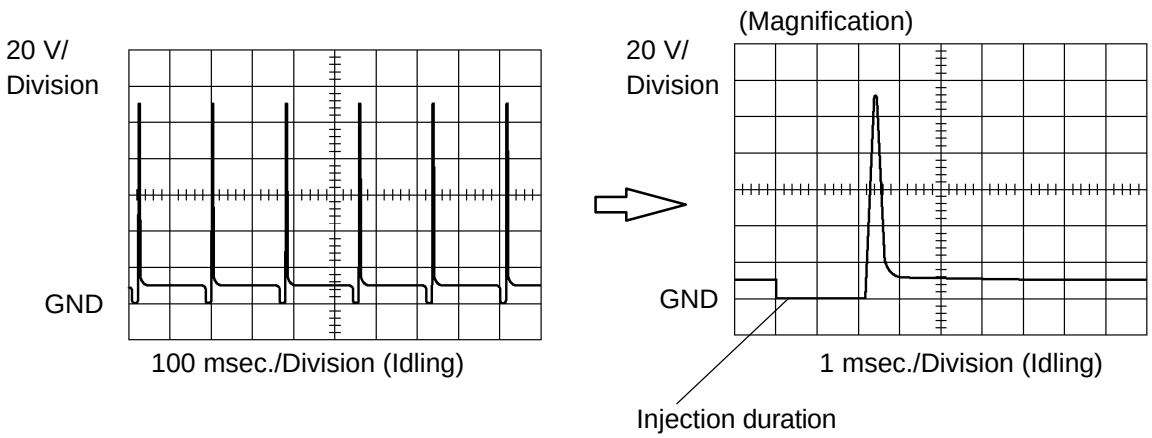

OK	Go to step 10.

NG

8	Check resistance of injector of misfiring cylinder (See page SF–16).

NG → Replace injector.

OK

9	Check for open and short in harness and connector between ignition switch and injector, injector and ECM of misfiring cylinder (See page IN–27).

NG → Repair or replace harness or connector.

OK

10	Check injector injection of misfiring cylinder (See page SF–21).

NG → Replace injector.

OK

11	Check compression pressure of misfiring cylinder (See page EM–3).

NG → Repair or replace.

OK

12	Check valve clearance of misfiring cylinder (See page EM–4).

NG → Adjust valve clearance.

OK

13	Check valve timing (Check for loose and jumping teeth of timing belt) (See page EM–19).

NG → Adjust valve timing (Repair or replace timing belt).

OK ↓

14	Check fuel pressure (See page SF–7).

NG → Check and repair fuel pump, pressure regulator, fuel pipe line and filter (See page SF–1).

OK ↓

15	Check mass air flow meter (See page SF–28).

NG → Repair mass air flow meter.

OK ↓

16	Check engine coolant temp. sensor (See page SF–43).

NG → Replace engine coolant temp. sensor.

OK ↓

Check intermittent problems (See page DI–194).

DTC	P0325	Knock Sensor 1 Circuit (Bank 1 or Single Sensor)

DTC	P0330	Knock Sensor 2 Circuit (Bank 2)

CIRCUIT DESCRIPTION

The knock sensors are fitted on the right bank and left bank of the cylinder block to detect the engine knocking. Each sensor contains a piezoelectric element which generates voltage when it becomes deformed, which occurs when the cylinder block vibrates due to the knocking. If the engine knocking occurs, the ignition timing is retarded to suppress it.

DTC No.	DTC Detection Condition	Trouble Area
P0325	No signal of knock sensor 1 to ECM with engine speed between 1,700 rpm and 5,400 rpm	▲Open or short in knock sensor 1 circuit ▲Knock sensor 1 (looseness) ▲ECM
P0330	No signal of knock sensor 2 to ECM with engine speed between 1,700 rpm and 5,400 rpm	▲Open or short in knock sensor 2 circuit ▲Knock sensor 2 (looseness) ▲ECM

WIRING DIAGRAM

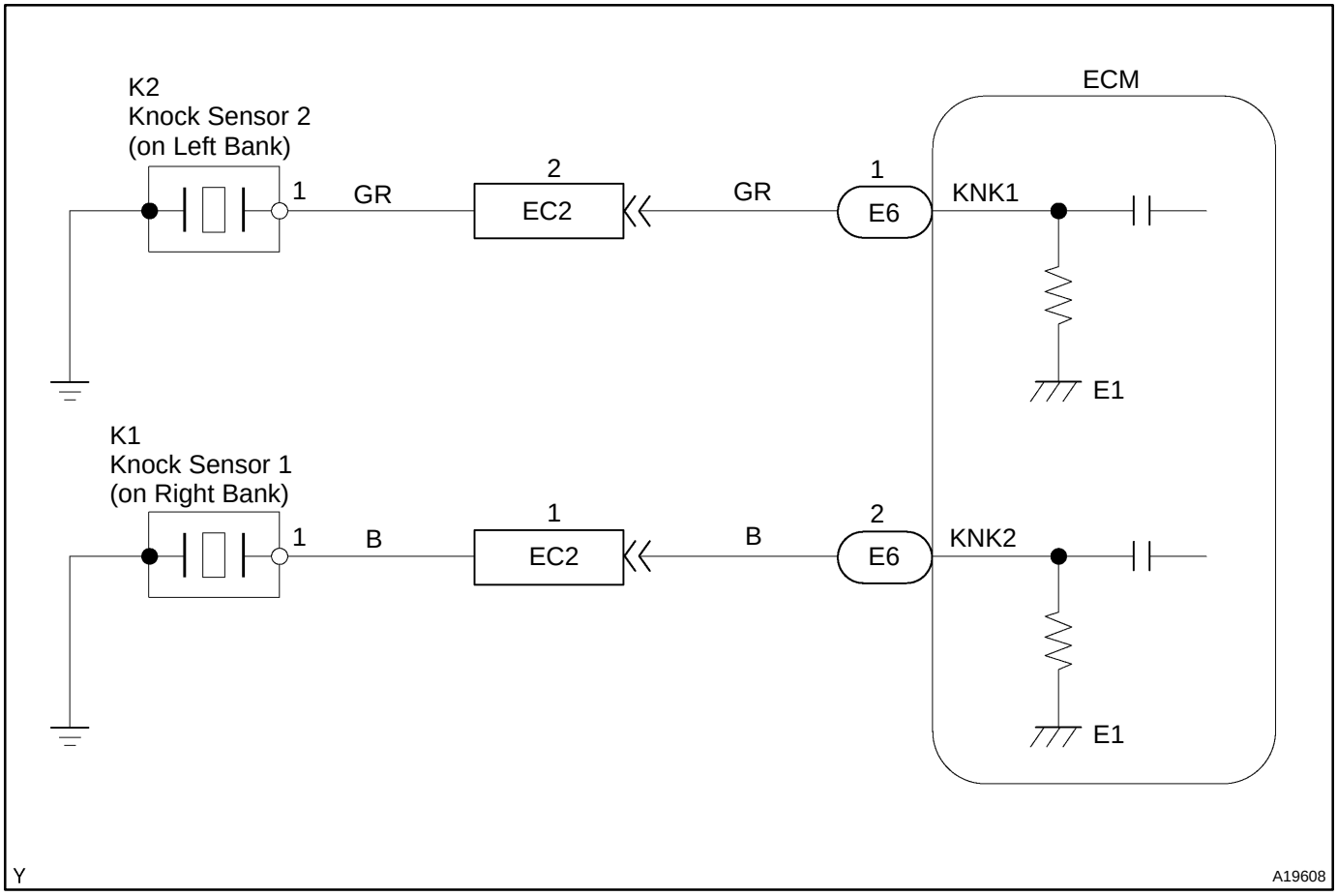

INSPECTION PROCEDURE

HINT:

- DTC P0325 is for the left bank knock sensor circuit.
- DTC P0330 is for the right bank knock sensor circuit.
- Read freeze frame data using hand–held tester or OBD II scan tool, as freeze frame data records the engine conditions when a malfunction is detected. When troubleshooting it is useful for determining whether the vehicle was running or stopped, the engine was warmed up or not, the air–fuel ratio was lean or rich, etc. at the time of the malfunction.

1	**Connect OBD II scan tool or hand–held tester, and check knock sensor circuit.**

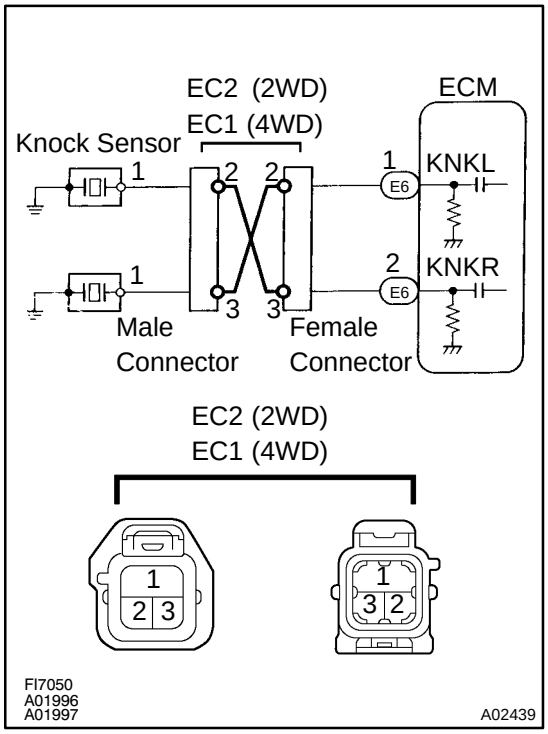

PREPARATION:

(a) Connect the OBD II scan tool or hand–held tester to the DLC3.

(b) Disconnect the wire to wire connector EC2 (2WD) or EC1 (4WD).

(c) Connect the terminals of the disconnected EC2 (2WD) or EC1 (4WD) male connector and EC2 (2WD) or EC1 (4WD) female connector as follows.

Male connector ↔ Female connector
Terminal 1 ↔ Terminal 2
Terminal 2 ↔ Terminal 1

(d) Turn the ignition switch ON and push the OBDII scan tool or hand–held tester main switch ON.

(e) After the engine is warmed up, perform a quick racing 4,000 rpm 3 times.

CHECK:

Check the DTC.

RESULT:

Type I	DTC same as when vehicle brought in P0325 → P0325 or P0330 → P0330
Type II	DTC different from when vehicle brought in P0325 → P0330 or P0330 → P0325

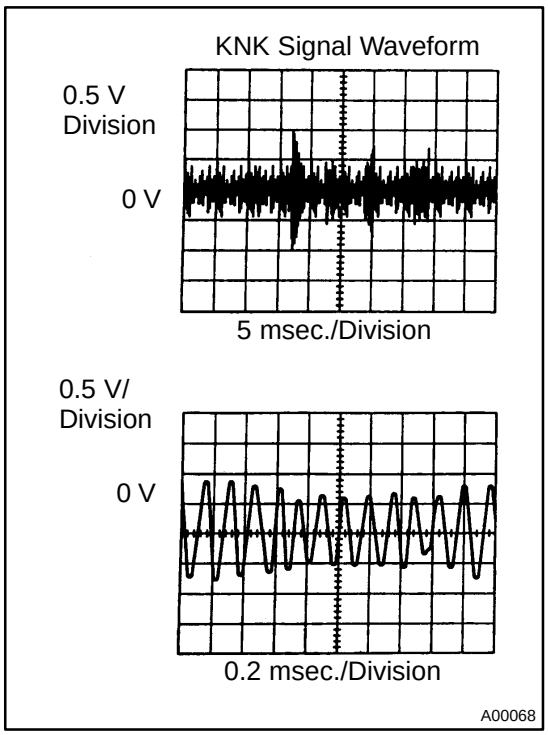

Reference: INSPECTION USING OSCILLOSCOPE

▲ With the engine racing (4,000 rpm), check the waveform between terminals KNK1, KNK2 of the ECM connector and the body ground.

HINT:

The correct waveform is as shown.

▲ Spread the time on the horizontal axis, and confirm that a period of the wave is 0.13 msec. (Normal mode vibration frequency of knock sensor: 8.1 kHz)

HINT:

If the normal mode vibration frequency is not 8.1 kHz, the sensor is malfunctions.

Type II	**Go to step 3.**

Type I

2	**Check for open and short in harness and connector between EC1 connector and ECM (See page IN–27).**

NG	**Repair or replace harness or connector.**

OK

Check and replace ECM (See page IN–27).

3	**Check for open and short in harness and connector between EC2 (2WD) or EC1 (4WD) connector and knock sensor (See page IN–27).**

HINT:

- If DTC P0325 has changed to P0330, check the knock sensor circuit on the left bank.
- If DTC P0330 has changed to P0325, check the knock sensor circuit on the right bank.

NG → **Repair or replace harness or connector.**

OK

Replace knock sensor.

DI1LR–12

DTC	P0335	Crankshaft Position Sensor ”A” Circuit

CIRCUIT DESCRIPTION

The crankshaft position sensor, which detects the engine speed and crankshaft angle signal (NE signal), has been installed on the oil pump body.
The NE signal plate has 34 teeth. The NE signal sensor generates 34 signals at every engine revolution. The ECM detects the standard angle of the crankshaft based on the G signal, and the actual angle of the crankshaft and the engine speed by the NE signal.

DTC No.	DTC Detection Condition	Trouble Area
P0335	No crankshaft position sensor signal to ECM during cranking (2 trip detection logic)	▲Open or short in crankshaft position sensor circuit ▲Crankshaft position sensor ▲Signal plate ▲ECM
	No crankshaft position sensor signal to ECM with engine speed 600 rpm or more (2 trip detection logic)	

WIRING DIAGRAM

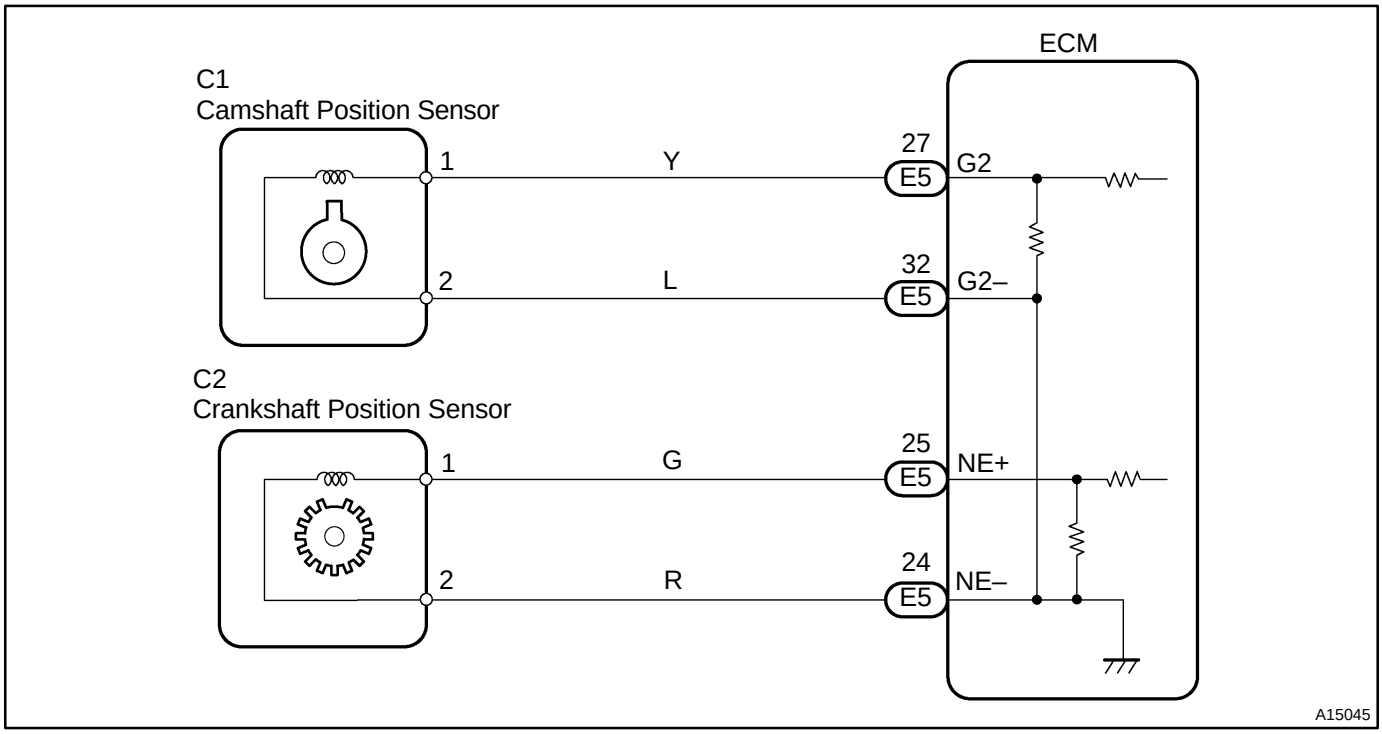

INSPECTION PROCEDURE

HINT:

- ▲ Perform a troubleshooting of DTC P0335 first. If no trouble is found, troubleshoot the following mechanical systems.
- ▲ Read freeze frame data using hand–held tester or OBD II scan tool, as freeze frame data records the engine conditions when a malfunction is detected. When troubleshooting it is useful for determining whether the vehicle was running or stopped, the engine was warmed up or not, the air–fuel ratio was lean or rich, etc. at the time of the malfunction.

1	**Check resistance of crankshaft position sensor (See page IG–1).**

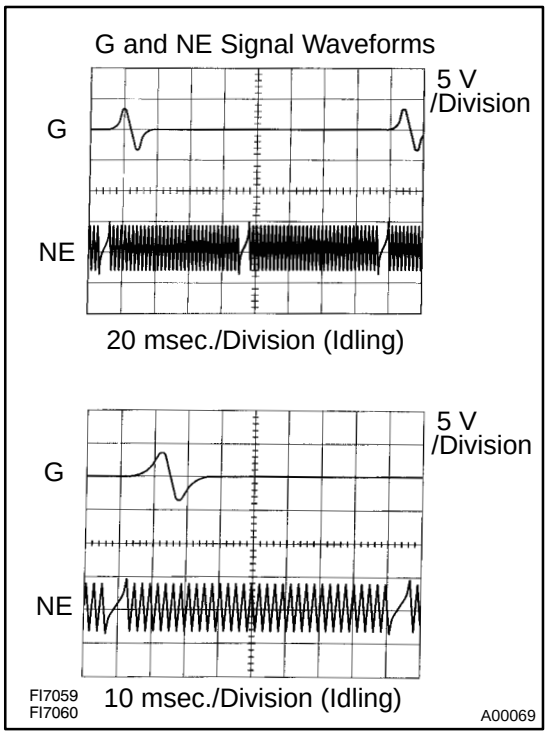

Reference: INSPECTION USING OSCILLOSCOPE
During cranking or idling, check the waveforms between terminals G2 and NE–, and NE and NE– of the ECM connector.
HINT:
The correct waveforms are as shown.

NG → **Replace crankshaft position sensor.**

OK

2	**Check for open and short in harness and connector between ECM and crankshaft position sensor (See page IN–27).**

NG → **Repair or replace harness or connector.**

OK

3	**Inspect sensor installation and teeth of signal plate.**

NG → **Tighten sensor. Replace signal plate.**

OK

Check and replace ECM (See page IN–27).

DIA89–01

DTC	P0339	Crankshaft Position Sensor ”A” Circuit Intermittent

CIRCUIT DESCRIPTION

Refer to DTC P0335 on page DI–287.

DTC No.	DTC Detection Condition	Trouble Area
P0339	No crankshaft position sensor signal to ECM with engine speed 1,000 rpm or more	▲Open or short in crankshaft position sensor circuit ▲Crankshaft position sensor ▲Signal plate ▲ECM

WIRING DIAGRAM

Refer to DTC P0335 on page DI–287.

INSPECTION PROCEDURE

Refer to DTC P0335 on page DI–287.

DTC	P0340	Camshaft Position Sensor ”A” Circuit (Bank 1 or Single Sensor)

DTC	P0341	Camshaft Position Sensor ”A” Circuit Range/Performance (Single Sensor)

CIRCUIT DESCRIPTION

The camshaft position sensor (G signal) consists of a magnet iron core and pickup coil.
The G signal plate has 1 tooth on its outer circumference and is installed on the LH camshaft timing pulley. When the camshafts rotate, protrusion on the signal plate and air gap on the pickup coil change, causing fluctuations in the magnetic field and generating an electromotive force in the pickup coil.
The NE signal plate has 34 teeth and is mounted on the crankshaft. The NE signal sensor generates 34 signals at every engine revolution. The ECM detects the standard angle of the crankshaft based on the G signal, the actual angle of the crankshaft and the engine speed by the NE signal.

DTC No.	DTC Detection Condition	Trouble Area
P0340 P0341	No signal of camshaft to ECM during cranking (2 trip detection logic)	▲Open or short in camshaft position sensor circuit ▲Camshaft position sensor ▲LH camshaft timing pulley ▲ECM
	No signal of camshaft to ECM with engine speed 600 rpm or more	

WIRING DIAGRAM

Refer to DTC P0335 on page DI–287.

INSPECTION PROCEDURE

HINT:
Read freeze frame data using hand–held tester or OBD II scan tool, as freeze frame data records the engine conditions when a malfunction is detected. When troubleshooting, it is useful for determining whether the vehicle was running or stopped, the engine was warmed up or not, the air–fuel ratio was lean or rich, etc. at the time of the malfunction.

1	**Check resistance of camshaft position sensor (See page IG–1).**

Reference: INSPECTION USING OSCILLOSCOPE
Refer to DTC P0335 on page DI–287.

NG → **Replace camshaft position sensor.**

OK

2	Check for open and short in harness and connector between ECM and camshaft position sensor (See page IN–27).

NG → Repair or replace harness or connector.

OK

3	Inspect sensor installation and tooth of LH camshaft timing pulley.

NG → Tighten sensor. Replace LH camshaft timing pulley.

OK

Check and replace ECM (See page IN–27).

DTC	P0351	Ignition Coil ”A” Primary/Secondary Circuit

DTC	P0352	Ignition Coil ”B” Primary/Secondary Circuit

DTC	P0353	Ignition Coil ”C” Primary/Secondary Circuit

DTC	P0354	Ignition Coil ”D” Primary/Secondary Circuit

DTC	P0355	Ignition Coil ”E” Primary/Secondary Circuit

DTC	P0356	Ignition Coil ”F” Primary/Secondary Circuit

DTC	P0357	Ignition Coil ”G” Primary/Secondary Circuit

DTC	P0358	Ignition Coil ”H” Primary/Secondary Circuit

CIRCUIT DESCRIPTION

A Direct Ignition System (DIS) has been adopted. The DIS improves the ignition timing accuracy, reduces high–voltage loss, and enhances overall reliability of the ignition system by eliminating the distributor.
The DIS is a 1–cylinder ignition system which ignites one cylinder with one ignition coil. In the 1–cylinder ignition system, the one spark plug is connected to the end of the secondary winding. High voltage generated in the secondary winding is applied directly to the spark plug. Spark of the spark plug passes from the center electrode to the ground electrode.
The ECM determines the ignition timing and outputs the ignition signals (IGT) for each cylinder. Based on the IGT signals, the power transistors in the igniter cut off the current to the primary coil in the ignition coil is supplied to the spark plug that are connected to the end of the secondary coil. At the same time, the igniter also sends an ignition confirmation signal (IGF) as a fail–safe measurement to the ECM.

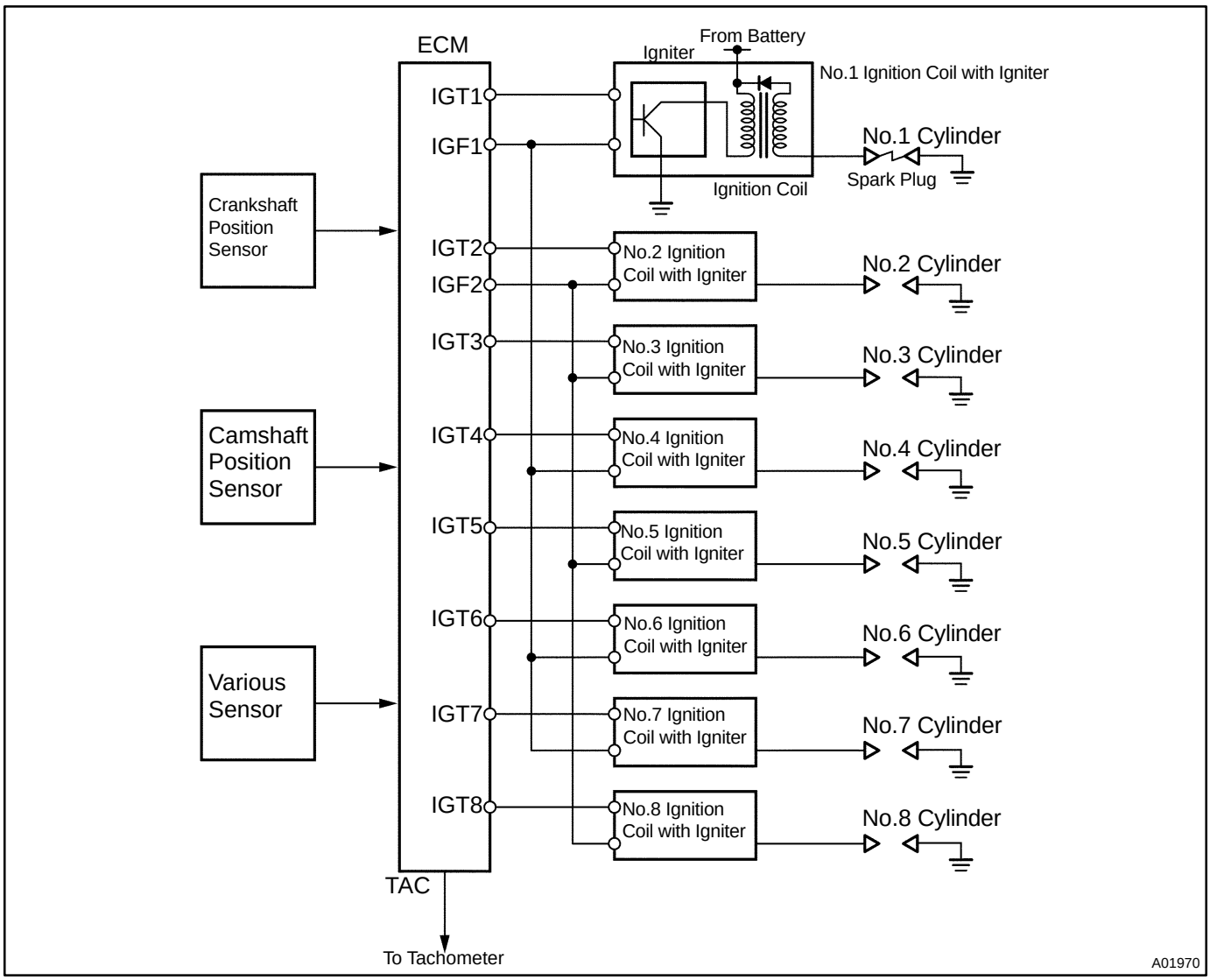

DTC No.	DTC Detection Condition	Trouble Area
P0351 P0352 P0353 P0354 P0355 P0356 P0357 P0358	No IGF signal to ECM while engine is running	▲Ignition system ▲Open or short in IGF1 or IGF2 and IGT1 – IGT8 circuit from ignition coil with igniter to ECM ▲No.1 – No.8 ignition coil with igniter ▲ECM

WIRING DIAGRAM

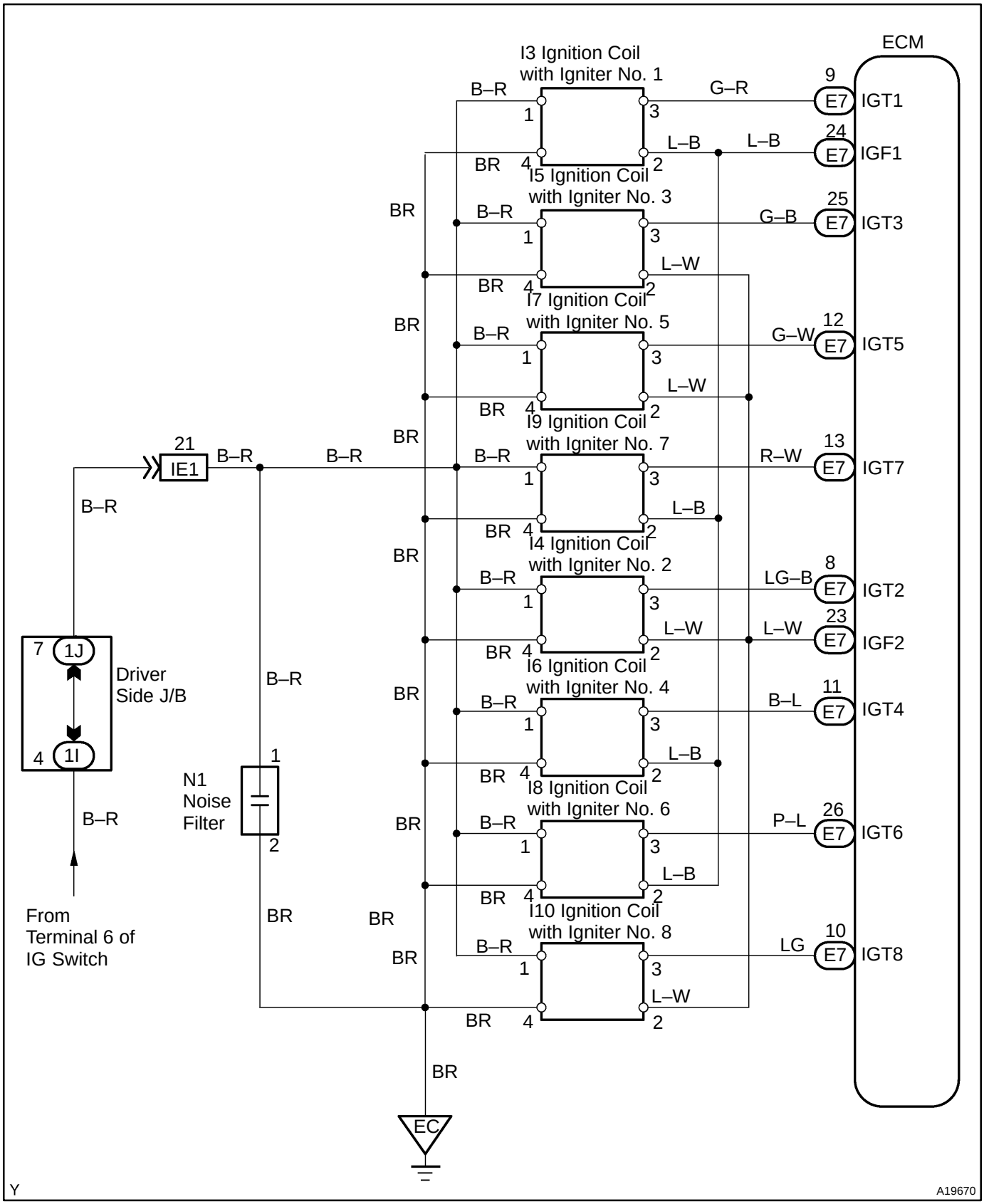

INSPECTION PROCEDURE

HINT:

- If DTC P0351 is displayed, check No.1 ignition coil with igniter circuit.
- If DTC P0352 is displayed, check No.2 ignition coil with igniter circuit.
- If DTC P0353 is displayed, check No.3 ignition coil with igniter circuit.
- If DTC P0354 is displayed, check No.4 ignition coil with igniter circuit.
- If DTC P0355 is displayed, check No.5 ignition coil with igniter circuit.
- If DTC P0356 is displayed, check No.6 ignition coil with igniter circuit.
- If DTC P0357 is displayed, check No.7 ignition coil with igniter circuit.
- If DTC P0358 is displayed, check No.8 ignition coil with igniter circuit.
- If DTCs P0351, P0354, P0356 and P0357 are output simultaneously, IGF1 circuit may be open or short.
- If DTCs P0352, P0353, P0355 and P0358 are output simultaneously, IGF2 circuit may be open or short.
- Read freeze frame data using hand–held tester or OBD II scan tool, as freeze frame data records the engine conditions when a malfunction is detected. When troubleshooting, it is useful for determining whether the vehicle was running or stopped, the engine was warmed up or not, the air–fuel ratio was lean or rich, etc. at the time of the malfunction.

1	**Check spark plug and spark (See page IG–1).**

NG → **Go to step 4.**

OK

2	**Check for open and short in harness and connector in IGF and IGT signal circuits between ECM and ignition coil with igniter (See page IN–27).**

NG → **Repair or replace harness or connector.**

OK

3	**Disconnect ignition coil with igniter connector, and check voltage between terminals IGF1, IGF2 of ECM connector and body ground.**

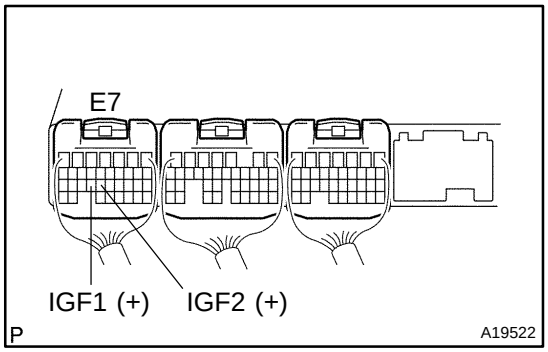

PREPARATION:

(a) Remove the glove compartment (See page SF–55).
(b) Disconnect the ignition coil with the igniter connector.
(c) Turn the ignition switch ON.

CHECK:

Measure the voltage between terminals IGF1, IGF2 of the ECM connector and the body ground.

OK:

Voltage: 4.5 – 5.5 V

OK → **Replace ignition coil with igniter.**

NG

Check and replace ECM (See page IN–27).

4	**Check for open and short in harness and connector in IGT signal circuit between ECM and ignition coil with igniter (See page IN–27).**

NG → **Repair or replace harness or connector.**

OK

5	Check voltage between terminals IGT1 – IGT8 of ECM connector and body ground.

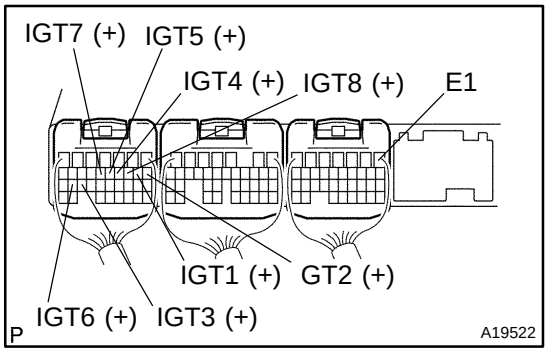

PREPARATION:

Remove the glove compartment (See page SF–55).

CHECK:

Measure the voltage between terminals IGT1 – IGT8 of the ECM connector and the body ground when the engine is cranked.

OK:

Voltage: More than 0.1 V and less than 4.5 V

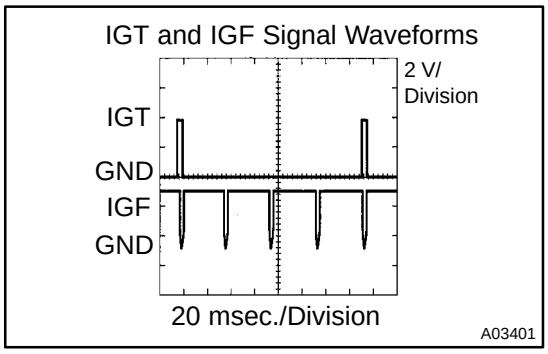

Reference: INSPECTION USING OSCILLOSCOPE

During cranking or idling, check the waveforms between terminals IGT1 – IGT8 and E1, and IGF1, IGF2 and E1 of the ECM connector.

HINT:

Correct waveform is as shown, with rectangle waves.

NG	Check and replace ECM (See page IN–27).

OK

6	**Disconnect ignition coil with igniter connector, and check voltage between terminals IGT1 – IGT8 of ECM connector and body ground.**

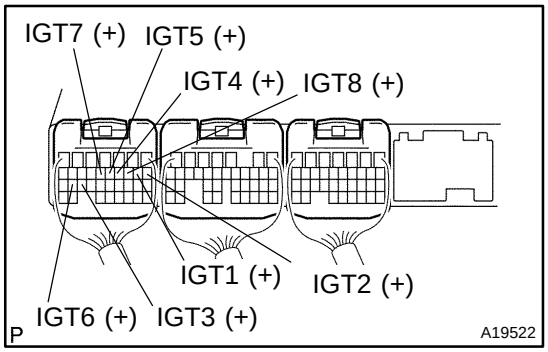

PREPARATION:

(a) Remove the glove compartment (See page SF–55).

(b) Disconnect the ignition coil with the igniter connector.

CHECK:

Measure the voltage between terminals IGT1 – IGT8 of the ECM connector and the body ground when the engine is cranked.

OK:

Voltage: More than 0.1 V and less than 4.5 V

NG	**Check and replace ECM (See page IN–27).**

OK

7	**Check ignition coil with igniter power source circuit.**

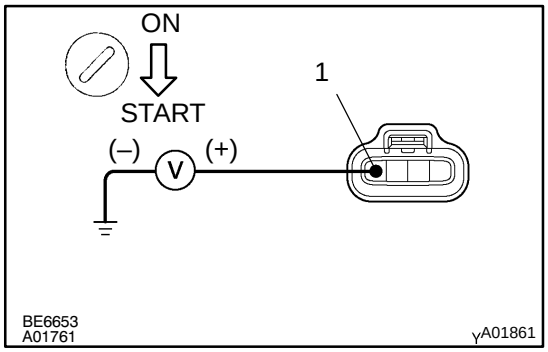

PREPARATION:

Disconnect the ignition coil with the igniter connector.

CHECK:

Measure the voltage between terminal 1 of the ignition coil with the igniter connector and the body ground when the ignition switch is turned to ON and START positions.

OK:

Voltage: 9 – 14 V

OK	**Repair ignition coil with igniter power source circuit.**

NG

8	**Check for open and short in harness and connector between ignition switch and ignition coil with igniter (See page IN–27).**

NG → **Repair or replace harness or connector.**

OK

Replace ignition coil with igniter.

DI1LT–11

DTC	P0420	Catalyst System Efficiency Below Threshold (Bank 1)

DTC	P0430	Catalyst System Efficiency Below Threshold (Bank 2)

CIRCUIT DESCRIPTION

The ECM compares the waveform of the oxygen sensor located before the catalyst with the waveform of the oxygen sensor located after the catalyst to determine whether or not the catalyst performance has deteriorated.

The air–fuel ratio feedback compensation keeps the waveform of the oxygen sensor before the catalyst repeatedly changing back and forth from rich to lean.

If the catalyst is functioning normally, the waveform of the oxygen sensor after the catalyst switches back and forth between rich and lean much more slowly than the waveform of the oxygen sensor before the catalyst.

But when both waveforms change at a similar rate, it indicates that the catalyst performance has deteriorated.

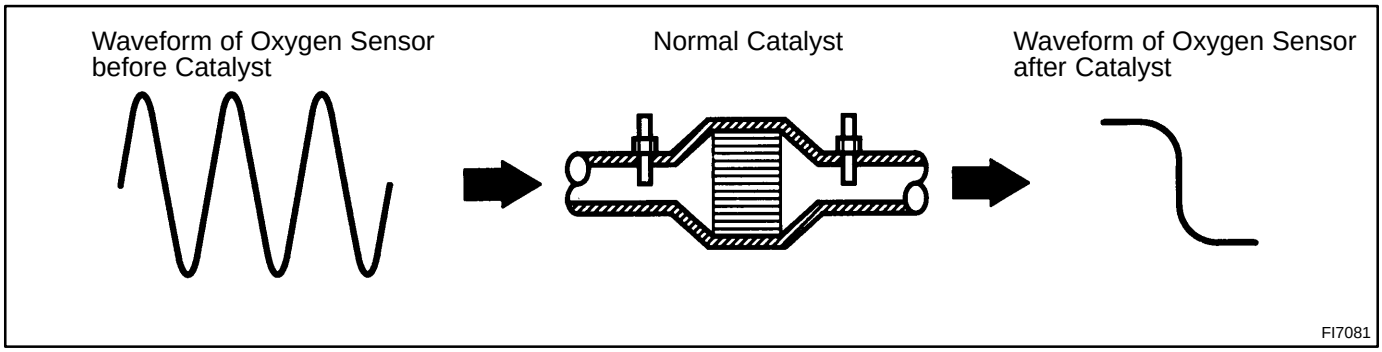

DTC No.	DTC Detection Condition	Trouble Area
P0420 P0430	After engine and catalyst are warmed up, and while vehicle is driven within set value and engine speed range, waveforms of heated oxygen sensors have same amplitude (2 trip detection logic)	▲Gas leak in exhaust system ▲Heated oxygen sensor ▲Three–way catalytic converter

CONFIRMATION ENGINE RACING PATTERN

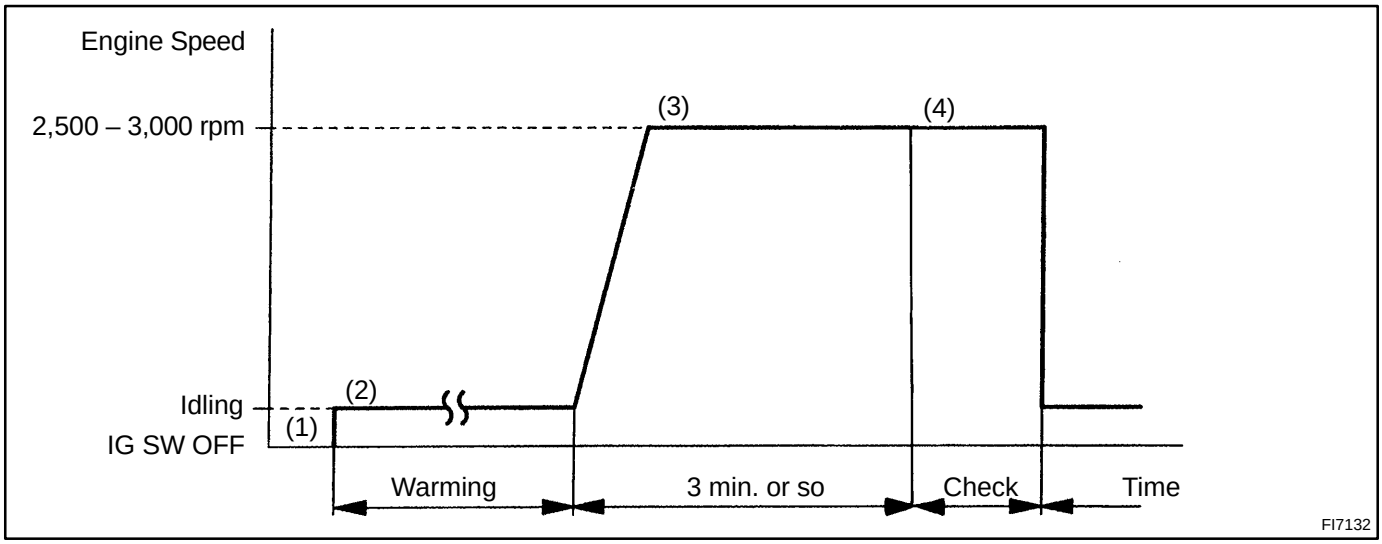

(1) Connect the hand–held tester to the DLC3, or connect the probe of the oscilloscope between terminals OXL1, OXL2, OXR1, OXR2 and E1 of the ECM connector.
(2) Start the engine and warm it up with all the accessories switched OFF until the engine coolant temperature is stable.
(3) Race the engine at 2,500 – 3,000 rpm for about 3 minutes.
(4) After confirming that the waveform of the heated oxygen sensor (bank 1, 2 sensor 1 (OXL1, OXR1)) which oscillates around 0.5 V during feedback to the ECM, check the waveform of the heated oxygen sensor (bank 1, 2 sensor 2 (OXL2, OXR2)).

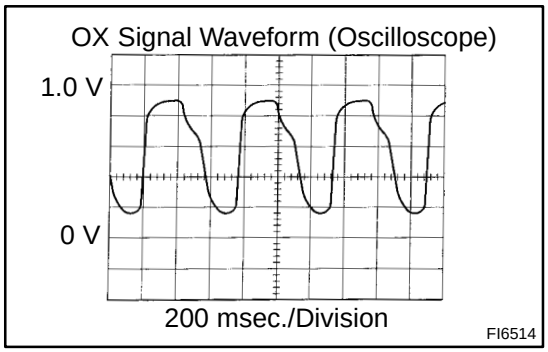

HINT:
If there is a malfunction in the system, the waveform of the heated oxygen sensor (bank 1, 2 sensor 2 (OXL2, OXR2)) is almost the same as that of the heated oxygen sensor (bank 1, 2 sensor 1 (OXL1, OXR1)) on the left.
There are some cases where, the MIL may either light up or not light up even though a malfunction exists.

INSPECTION PROCEDURE

HINT:
Read freeze frame data using hand–held tester or OBD II scan tool, as freeze frame data records the engine conditions when malfunction is detected. When troubleshooting, it is useful for determining whether the vehicle was running or stopped, the engine was warmed up or not, the air–fuel ratio was lean or rich, etc. at the time of the malfunction.

1	**Are there any other codes (besides DTC P0420 or P0430) being output?**

YES → **Go to relevant DTC chart (See page DI–205).**

NO

2	Check gas leak on exhaust system.

NG → Repair or replace.

OK

3	Check heated oxygen sensors (bank 1, 2 sensor 1) (See page DI–246).

NG → Repair or replace.

OK

4	Check heated oxygen sensors (bank 1, 2 sensor 2) (See page DI–259).

NG → Repair or replace.

OK

Replace three–way catalytic converter.

DTC	P0441	Evaporative Emission Control System Incorrect Purge Flow

DTC	P0442	Evaporative Emission Control System Leak Detected (small leak)

DTC	P0446	Evaporative Emission Control System Vent Control Circuit

DTC	P0456	Evaporative Emission Control System Leak Detected (very small leak)

CIRCUIT DESCRIPTION

P0441

The VSV for EVAP is used to purge the evaporative emissions from the fuel tank into the intake manifold. Also, it creates a vacuum inside the fuel tank in unison with the operation of the VSV for CCV (canister closed valve) and leak tests are performed using this vacuum. When the VSV for EVAP remains open (opened malfunction), the vacuum inside the fuel tank does not change. When the VSV for EVAP remains open (opened malfunction), the vacuum inside the fuel tank changes according to the operation of the VSV for CCV.

P0446

The VSV for CCV is open under normal conditions. When the VSV for EVAP is used to purge the evaporative emissions from the fuel tank into the intake manifold, air is drawn from the charcoal canister into the fuel tank. Also, the VSV for CCV has a function that relieves the pressure in the case that the pressure inside the fuel tank has rapidly increased. Also, it creates a vacuum inside the fuel tank in unison with the operation of the VSV for EVAP and leak tests are performed using this vacuum.
When the VSV for CCV remains closed (closed malfunction), the vacuum created inside the fuel tank cannot be relieved. When the VSV for CCV remains open (opened malfunction), it cannot create a large vacuum.

P0442, P0456

The vapor pressure sensor, VSV for EVAP and VSV for CCV are used to detect abnormalities in the evaporative emission control system.
The ECM judges whether there abnormalities exit in the evaporative emission control system, based on the signals from the vapor pressure sensor.
If evaporative emissions leak from the components specified within the dotted line Fig. 1 or the vapor pressure sensor malfunctions, ECM records DTC P0442 or P0456.

DTC No.	DTC Detecting Condition	Trouble Area
P0441	Pressure in charcoal canister and fuel tank does not drop during purge control (2 trip detection logic)	◀Vacuum hose cracks, holed blocked, damaged or disconnected ◀Fuel tank cap incorrectly installed ◀Fuel tank cap cracked or damaged ◀Open or short in vapor pressure sensor circuit ◀Vapor pressure sensor ◀Open or short in VSV circuit for EVAP ◀VSV for EVAP ◀Open or short in VSV circuit for CCV ◀VSV for CCV ◀Fuel tank cracked, holed or damaged ◀Charcoal canister cracked, holed or damaged ◀Fuel tank over fill check valve cracked damaged ◀ECM
	During purge cut–off, negative pressure incoming in the charcoal canister and fuel tank will not stop. (2 trip detection logic)	
P0446	When VSV for CCV is ON, pressure in charcoal canister and fuel tank is maintained at atmospheric pressure (2 trip detection logic)	
P0442 P0456	After cold engine start. After VSV for EVAP operation, the VSV for EVAP is turned off sealing the vacuum in the system and the ECM begins to monitor the pressure increase. Some increase is normal. A very rapid, sharp increase in pressure indicates a leak in the EVAP system and sets the DTC P0442. This monitoring method is also able to distinguish what is called the small or very small leak detection.(DTC P0456) A pressure rise just above normal indicates a very small hole. (2 trip detection logic)	

Fig. 1

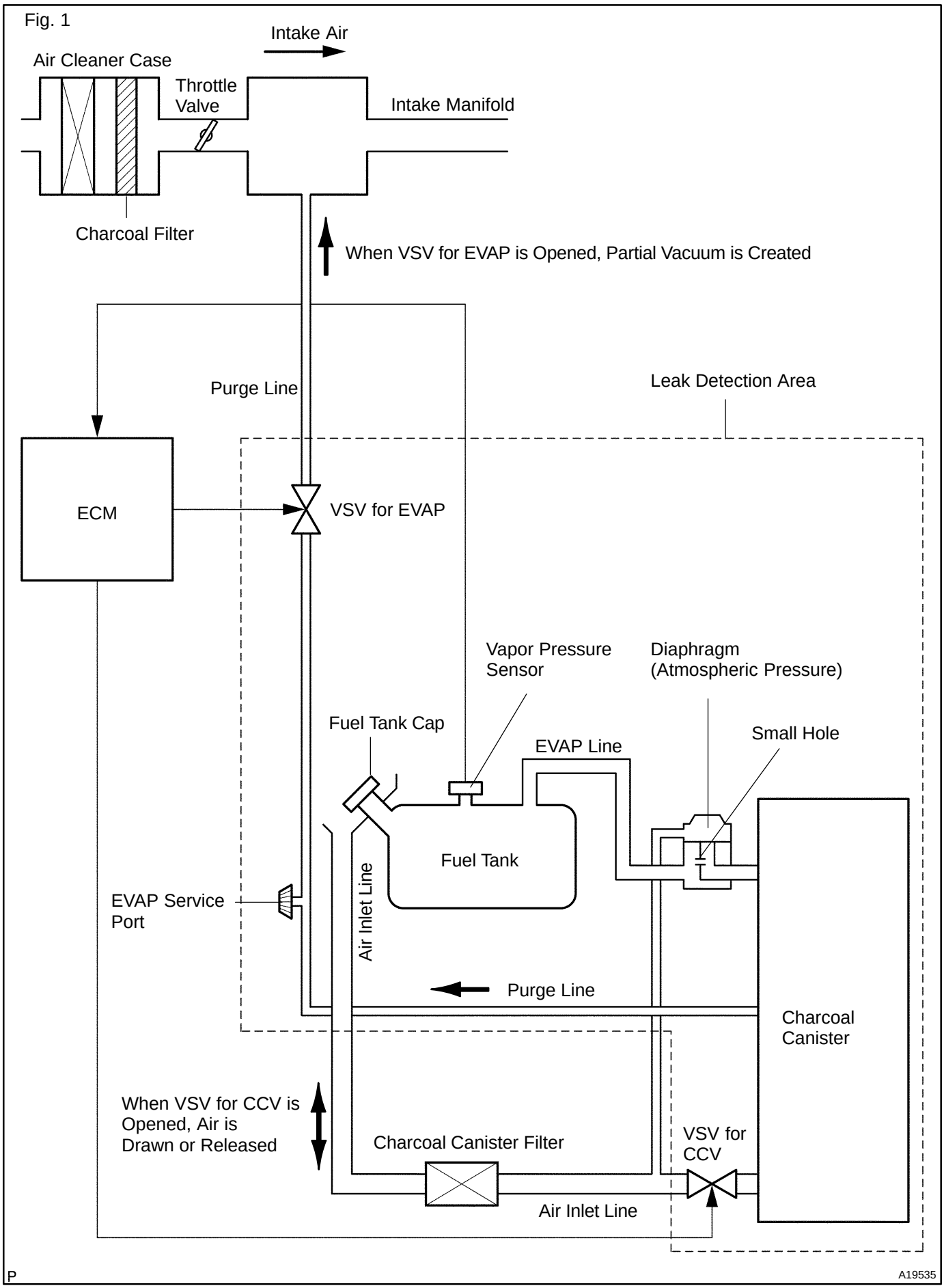
Intake Air
Air Cleaner Case
Throttle Valve
Intake Manifold
Charcoal Filter
When VSV for EVAP is Opened, Partial Vacuum is Created
Purge Line
Leak Detection Area
ECM
VSV for EVAP
Vapor Pressure Sensor
Diaphragm (Atmospheric Pressure)
Fuel Tank Cap
EVAP Line
Small Hole
Fuel Tank
EVAP Service Port
Air Inlet Line
Purge Line
Charcoal Canister
When VSV for CCV is Opened, Air is Drawn or Released
Charcoal Canister Filter
VSV for CCV
Air Inlet Line
P
A19535

Leak Check

Initial Condition
▲Cold Start
▲Engine Coolant Temp./Intake Air Temp. nearly Same

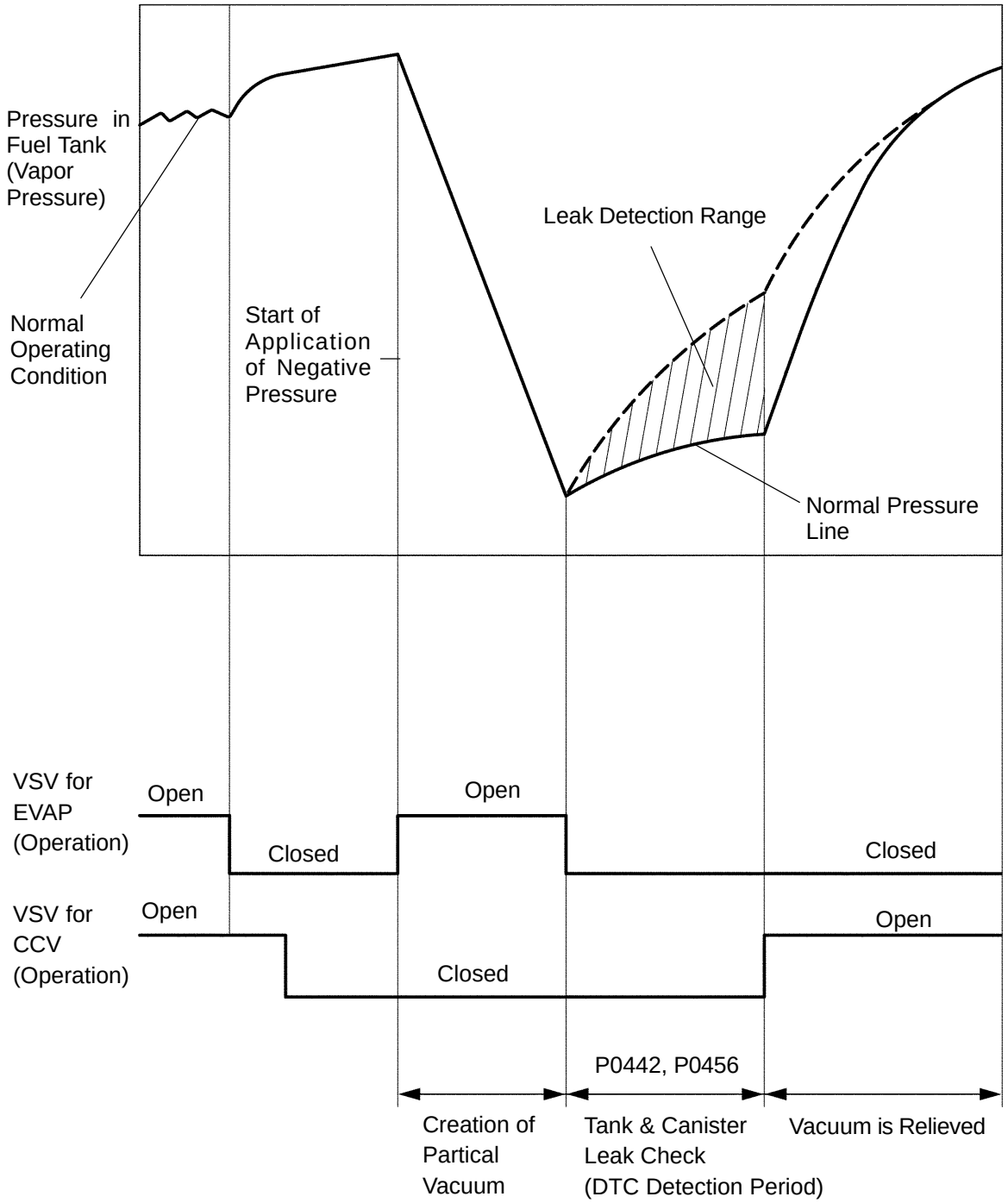

VSV for EVAP is Open: ON
VSV for CCV is Open: OFF

P A19534

VSV Malfunction Condition and DTC Detection Timing

VSV for EVAP is Open: ON
VSV for CCV is Open: OFF

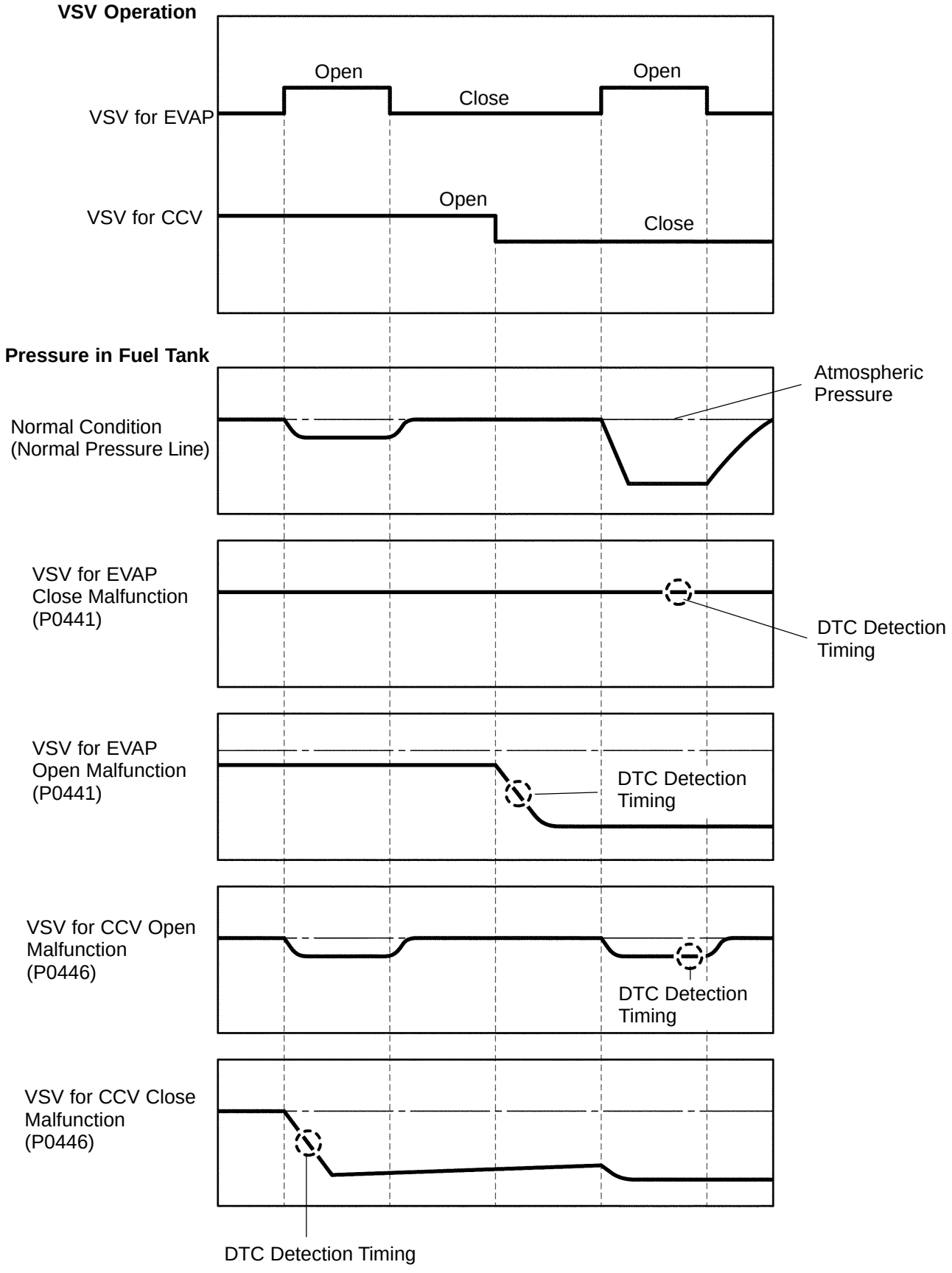

P A19613

EVAP LEAK TEST

(a) Connect the hand–held tester to the DLC3.
(b) Select the ”ENHANCED OBD2/SYSTEM CHECK/EVAP SYS CHECK (or EVAP LEAK TEST)” mode on the hand–held tester.
(c) Perform ”EVAP SYS CHECK (or EVAP LEAK TEST)”.

Display on the Hand–held tester	Scan tool detect a leak on the EVAP system
	Scan tool does not detect a leak on the EVAP system

HINT:
If a leak is detected during this leak test, or if DTCs P0441, P0442 and P0446 are output simultaneously, conduct a leak test again after repair. If no leak is found at this time, the EVAP system is recovered to normal.

WIRING DIAGRAM

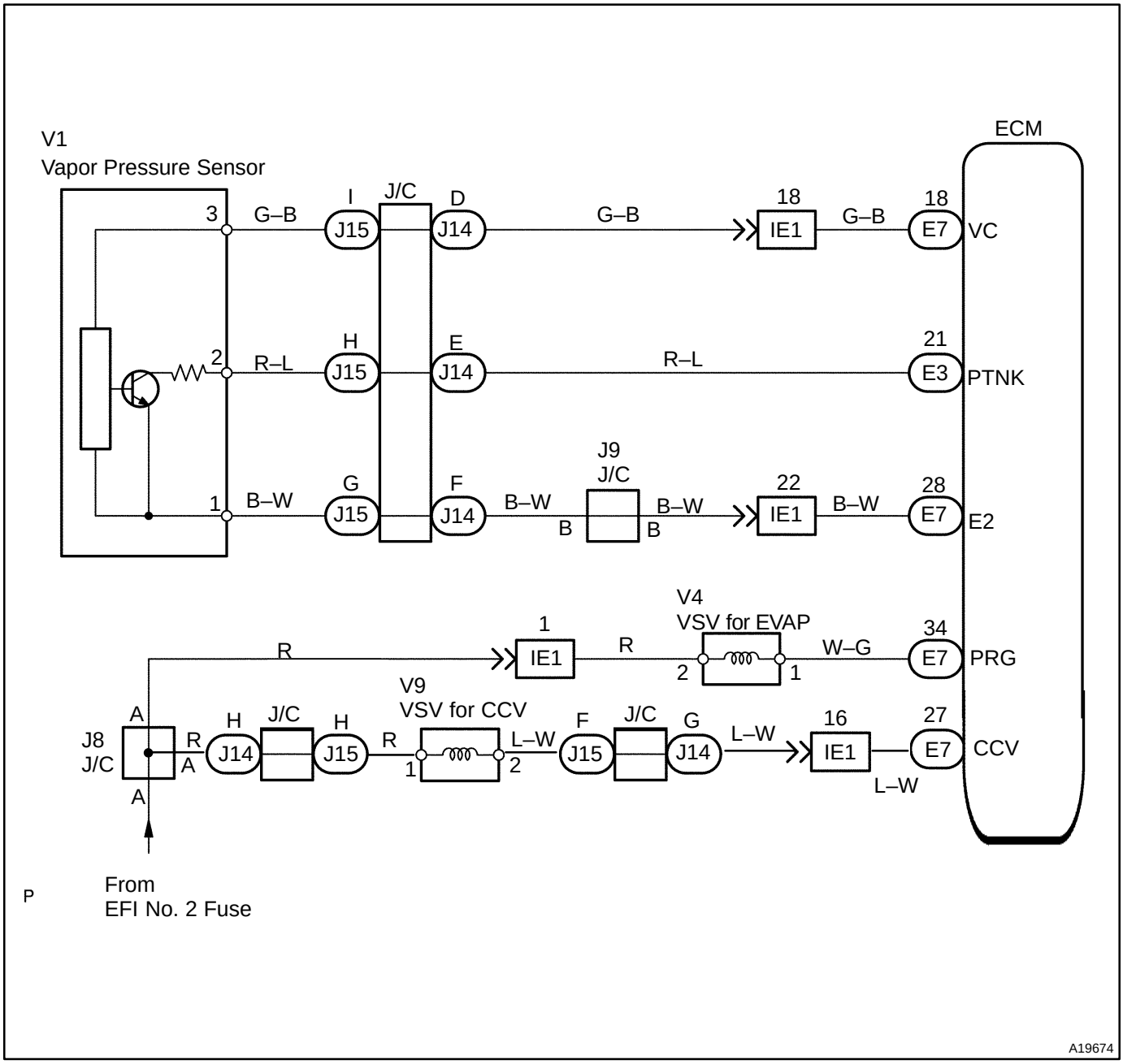

CONFIRMATION READINESS TEST

First Trip Procedure

(a) Vehicle must be cold, ambient temperature approximately between 50˚F – 95˚F.

(b) Intake Air Temp. (IAT) and Engine Coolant Temp. (ECT) sensor almost same value.

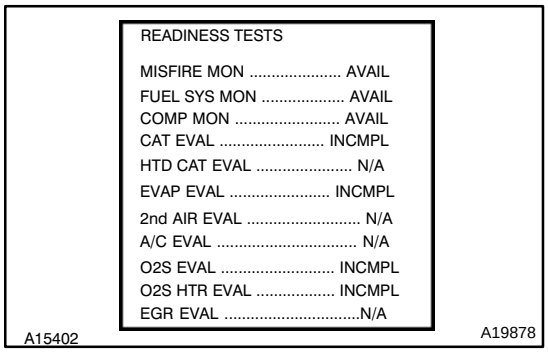

(c) Clear DTC's.

- ◀ Disconnecting the battery terminals or EFI fuse.
- ◀ Readiness tests will show INCMPL (incomplete).

(d) Drive the vehicle according to LA#4 drive cycle. Note the state of Readiness Tests. They will change to COMPL as the evaluation monitors operate and if the system passes. This procedure may take approximately 20 minutes or more.

NOTICE:

Do not shut off the engine – the results will be invalid.

Pass Condition – No Problem Found by the ECM

If the EVAP evaluation monitor shows COMPL, go to the Non–Continuous Test screen.

NOTICE:

Do not shut off the engine – the results will be invalid.

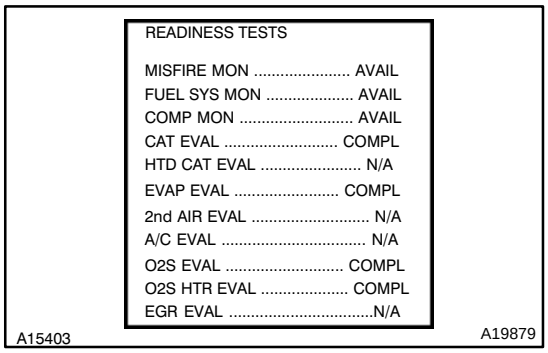

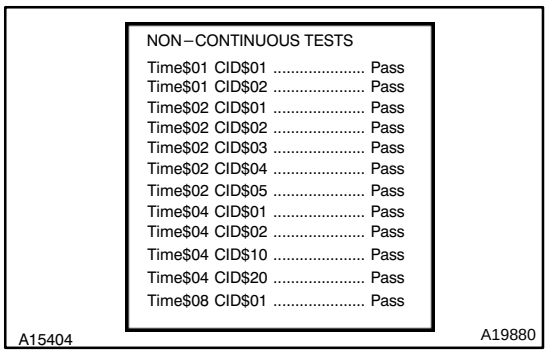

- ◀ To get there, go to Advanced OBD II, Onboard Tests, Non–continuous Tests.
- ◀ If all of the tests in the time $02 category Tests show Pass, the evaluation monitor has operated and no problem was detected.

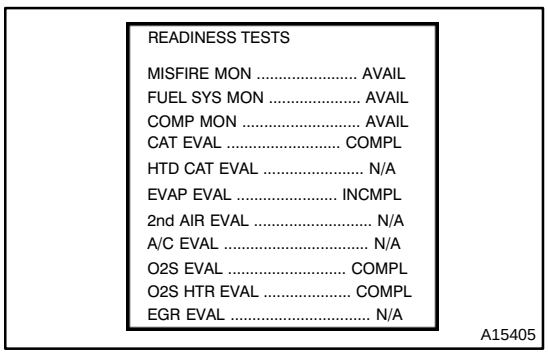

Fail Condition – Problem Detected by the ECM

If the EVAP evaluation monitor shows INCMPL, go to the Non–Continuous Test screen.

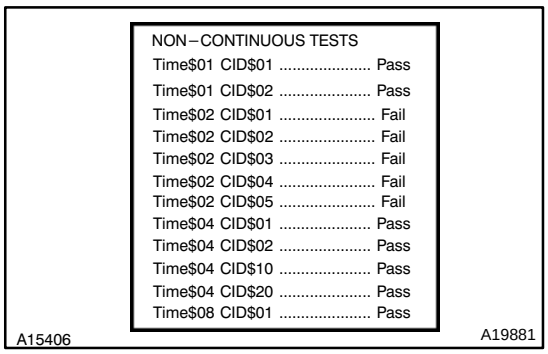

(1) If all Tests show Pass, the following may have occurred.
- ◀ The EVAP evaluation monitor did not operate.
- ◀ The EVAP evaluation monitor did not finish.
- ◀ The ECM withheld judgement.

(2) If one or more of the tests in the time $02 category show Fail, the EVAP evaluation monitor did operate and the ECM detected a problem.

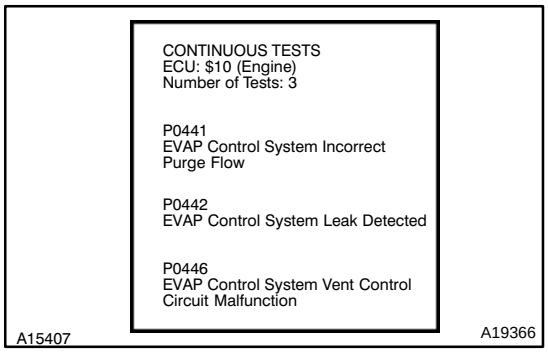

(3) Go to Continuous Tests screen. This is the only place DTC's are listed for the first trip.

NOTICE:

The DTC listed may not be valid. A second trip is needed to confirm the DTC.

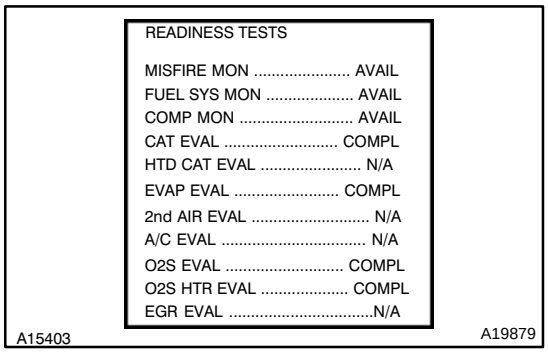

Second Trip Procedure

(a) Vehicle must be cold, ambient temperature approximately between 50°F – 95°F.

(b) Go to Readiness Tests screen.

(c) Drive the vehicle according to LA#4 drive cycle. Note the state of EVAP evaluation monitor. This procedure may take approximately 20 minutes or more.

NOTICE:

Do not shut off the engine – the results will be invalid.

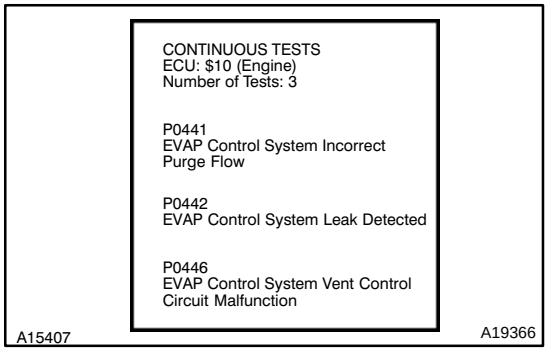

If Readiness Tests changes to COMPL, the EVAP evaluation monitor has operated. Check for any stored DTC's.
- ◀ If a DTC has stored, the problem has been detected and confirmed by the ECM.
- ◀ If no DTC was found, the EVAP monitor operated but no problem was detected.

INSPECTION PROCEDURE

HINT:

- ◀ If DTC P0441 (Purge Flow), P0446 (VSV for CCV), P0451, P0452 or P0453 (Evaporative Pressure Sensor) is output with DTC P0442 or P0456, first troubleshoot DTC P0441, P0446, P0451, P0452 or P0453. If no malfunction is detected, troubleshoot DTC P0442 or P0456 next.
- ◀ Ask the customer whether, after the MIL came on, the customer found the fuel tank cap loose and tightened it. Also ask the customer whether the fuel tank cap was loose when refuelling. If the fuel tank cap was loose, it was the cause of the DTC. If the fuel tank cap was not loose or if the customer was not sure if it was loose, troubleshoot according to the following procedure.
- ◀ Read freeze frame data using OBD II scan tool or hand–held tester. Because freeze frame records the engine conditions when the malfunction is detected. When troubleshooting, it is useful for determining whether the vehicle was running or stopped, the engine was warmed up or not, the air–fuel ratio was lean or rich, etc. at the time of the malfunction.
- ◀ When the ENGINE RUN TIME in the freeze frame data is less than 200 seconds, carefully check the vapor pressure sensor.

HINT:

DTC output of each trouble part.

DTC output	Trouble part	Trouble chart	
P0441 only	Open Malfunction of VSV for EVAP	Execute step from 7 to 10	Check and replace of VSV for EVAP
P0446 only	Close Malfunction of VSV for CCV	Execute step from 11 to 15	Check and replace of VSV for CCV
P0442 and/or P0456	Very small or small or medium leak	Execute step from 2	
P0441 and P0442 and P0446	Large leak (for example fuel tank cap loose) or VSV malfunction (open malfunction of VSV for CCV or close malfunction of VSV for EVAP)	Execute step from 3*	

*: In most cases, troubleshooting can be completed by checking if the fuel tank cap is not loose and repairing the VSV for CCV and VSV for EVAP.

Hand–held tester:

1	**Read output DTC.**

PREPARATION:

Connect the hand–held tester to the DLC3.

CHECK:

(a) Read the output DTC.

(b) Troubleshoot the problems, according to the DTC output.

HINT:

If trouble area is known by the DTC, proceed to the applicable part.

DTC output	Troubleshoot	Proceed to
◀P0442 (small leak) ◀P0456 (very small leak) ◀P0442 and P0456 ◀Other DTC combination	Go to step 2	A
P0441 only (VSV for EVAP malfunction)	Execute step from 7 to 10	B
P0446 only (VSV for CCV malfunction)	Execute step from 11 to 15	C
P0441 and P0446 and P0446	Go to step 3	D

B → **Execute step from 7 to 10.**

C → **Execute step from 11 to 15.**

D → **Go to step 3.**

A

2	**Perform EVAP leak test.**

GO

3	**Check that fuel tank cap is TOYOTA genuine parts.**

NG → **Replace to TOYOTA genuine parts.**

OK

4	**Check that fuel tank cap is correctly installed.**

NG → **Correctly install fuel tank cap.**

OK

5	**Check fuel tank cap (See page EC–8).**

NG → **Replace fuel tank cap.**

OK

6	**Check filler neck for damage.**

PREPARATION:
Remove the fuel tank cap.
CHECK:
Visually inspect the filler neck for damage.

NG → **Replace filler pipe.**

OK

7	Check purge flow.

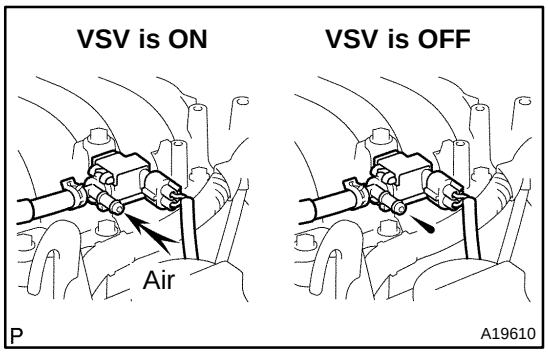

PREPARATION:

(a) Connect the hand–held tester to the DLC3.
(b) Select the ”ENHANCED OBD2/ACTIVE TEST” mode on the hand–held tester.
(c) Disconnect the vacuum hose for the VSV for the EVAP from the charcoal canister.
(d) Start the engine.
(e) Select the item ”EVAP (ALON)/ALL” in the ACTIVE TEST and operate VSV for EVAP.

CHECK:

When the VSV for the EVAP is operated by the hand–held tester, check whether the disconnected hose applies suction to your finger.

OK:

VSV is ON:
Disconnected hose applies suction to your finger.
VSV is OFF:
Disconnected hose applies no suction to your finger.

OK	Go to step 11.

NG

8	Check vacuum hose between intake manifold and VSV for EVAP, and VSV for EVAP and charcoal canister.

CHECK:

(a) Check that the vacuum hose is connected correctly.
(b) Check the vacuum hose for looseness and disconnection.
(c) Check the vacuum hose for cracks, hole, damage and blockage.

NG	Repair or replace.

OK

9	Check operation of VSV for EVAP (See page SF–38).

NG → Replace VSV for EVAP.

OK

10	Check for open and short in harness and connector between EFI main relay (Marking: EFI) and VSV for EVAP, and VSV for EVAP and ECM (See page IN–27).

NG → Repair or replace harness or connector.

OK

Check and replace ECM (See page IN–27).

11	Check VSV for CCV.

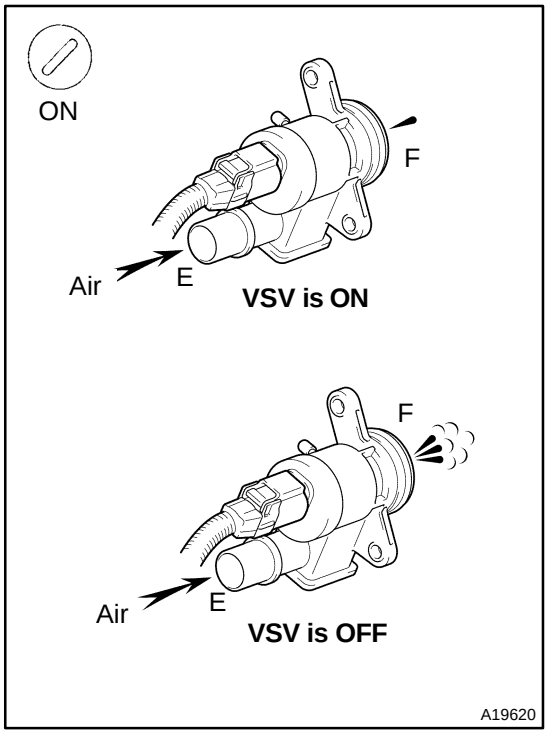

PREPARATION:

(a) Disconnect the vacuum hose for the VSV for the CCV from the charcoal canister.
(b) Turn the ignition switch ON and push the hand–held tester main switch ON.
(c) Select the ”ENHANCED OBD2/ACTIVE TEST” mode on the hand–held tester.
(d) Select the item ”INTAKE CTL VSV/ALL” in the ACTIVE TEST and operate VSV for CCV.

CHECK:

Check the VSV operation when it is operated by the hand–held tester.

OK:

VSV is ON:
Air does not flow from port E to port F.
VSV is OFF:
Air from port E flows out through port F.

VSV operation	Output DTC	Proceed to
NG	–	A
OK	P0446 output	B
	P0446 does not output	C

B	Go to step 15.

C	Go to step 16.

A

12	Check leakage for between VSV for CCV and charcoal canister.

CHECK:

(a) Check that the VSV for CCV is correctly installed.
(b) Check the O–ring.

NG	Repair or replace.

OK

13	Check operation of VSV for CCV (See page SF–41).

NG → Replace VSV for CCV.

OK

14	Check for open and short in harness and connector between EFI main relay (Marking: EFI) and VSV for CCV, and VSV for CCV and ECM (See page IN–27).

NG → Repair or replace harness or connector.

OK

15	Perform active test for VSV for EVAP (Check that charcoal canister filter is not clogged).

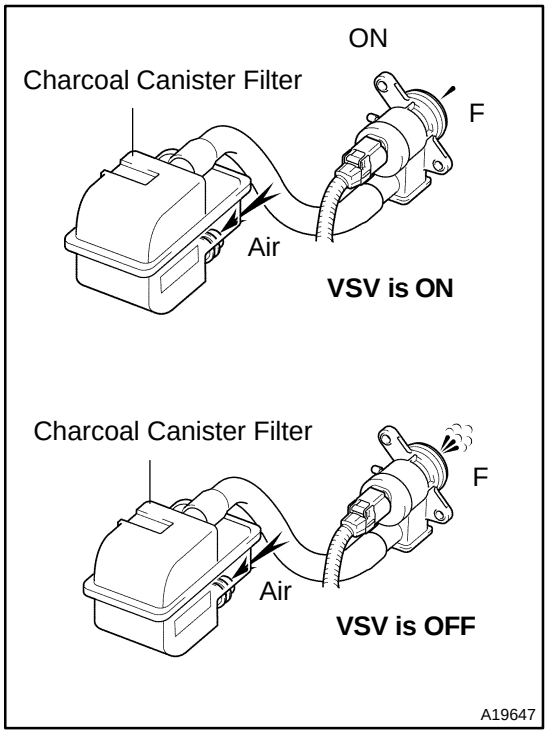

PREPARATION:

(a) Disconnect the vacuum hose for the VSV for the CCV from the charcoal canister.
(b) Turn the ignition switch ON and push the hand–held tester main switch ON.
(c) Select the ”ENHANCED OBD2/ACTIVE TEST” mode on the hand–held tester.
(d) Select the item ”INTAKE CTL VSV/ALL” in the ACTIVE TEST and operate VSV for CCV.

CHECK:

Check the VSV operation when it is operated by the hand–held tester.

OK:

VSV is ON:
Air does not flow from charcoal canister filter port to port F.
VSV is OFF:
Air from charcoal canister filter port flows out through port F.

NG	Replace charcoal canister filter.

OK

Check and replace ECM (See page IN–27).

16	Check whether hose close to fuel tank have been modified, and check whether there are signs of any accident near fuel tank or charcoal canister.

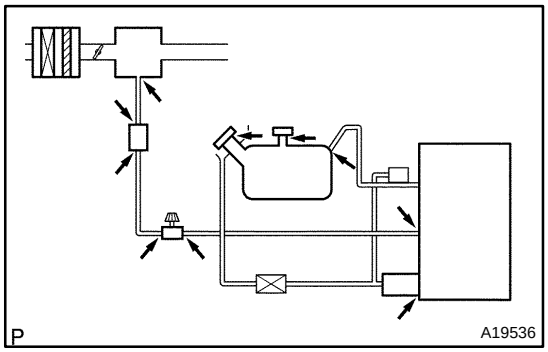

CHECK:

Check for cracks, deformation and loose connection of the following parts:

- Fuel tank
- Charcoal canister
- Fuel tank filler pipe
- Hoses and tubes around fuel tank and charcoal canister

NG	Repair or replace.

OK

17	**Check vacuum hoses between vapor pressure sensor and fuel tank, and charcoal canister and VSV for pressure switching valve.**

CHECK:

(a) Check that the vacuum hose is connected correctly.
(b) Check the vacuum hose for looseness and disconnection.
(c) Check the vacuum hose for cracks, hole and damage.

NG → **Repair or replace.**

OK

18	**Check hoses and tube (purge line and EVAP line).**

CHECK:

(a) Check that the vacuum hose is connected correctly.
(b) Check the vacuum hose for looseness and disconnection.
(c) Check the vacuum hose for cracks, hole and damage.

NG → **Repair or replace.**

OK

19	**Check hose and tube between fuel tank and charcoal canister.**

CHECK:

(a) Check for proper connection of the fuel tank and fuel EVAP pipe (See page EC–8), fuel EVAP pipe and fuel tube under the floor, fuel tube under the floor and charcoal canister.
(b) Check the hose and tube for cracks, hole and damage.

NG → **Repair or replace.**

OK

20	**Check charcoal canister for cracks, hole and damage (See page EC–8).**

NG → **Repair or replace.**

OK

21	Check voltage between terminals VC and E2 of ECM connector.

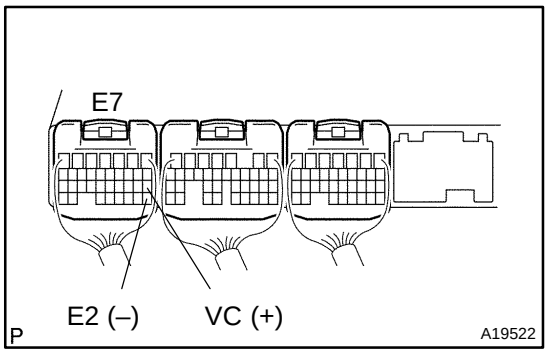

CHECK:

(a) Remove the grove compartment (See page SF–54).

(b) Turn the ignition switch ON.

CHECK:

Measure the voltage between terminals VC and E2 of the ECM connector.

OK:

Voltage: 4.5 – 5.5 V

NG	Check and replace ECM (See page IN–27).

OK

22	Check voltage between terminals PTNK and E2 of ECM connectors.

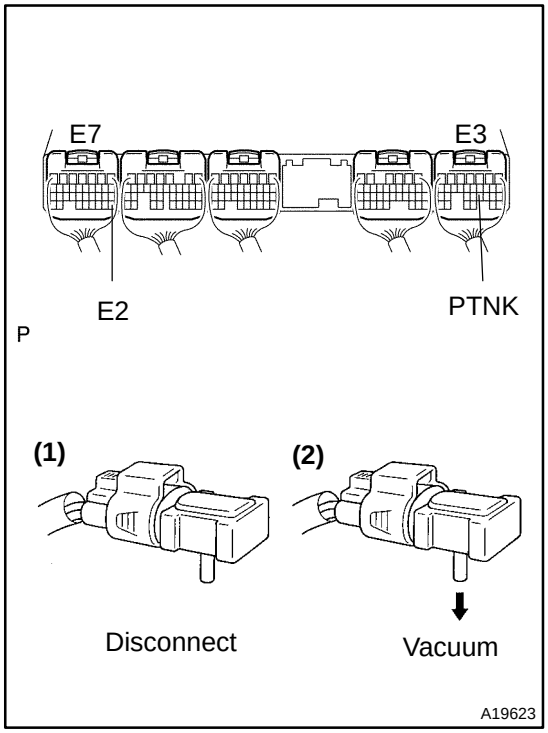

PREPARATION:

(a) Remove the grove compartment (See page SF–54).

(b) Turn the ignition switch ON.

CHECK:

Measure the voltage between terminals PTNK and E2 of the ECM connectors.

(1) Disconnect the vapor pressure sensor.

(2) Using the MITYVAC (Hand–Held Vacuum Pump), apply a vacuum of 4.0 kPa (30 mmHg, 1.18 in.Hg) to the vapor pressure sensor.

NOTICE:

The vacuum applied to the vapor pressure sensor must be less than 66.7 kPa (500 mmHg, 19.7 in.Hg).

OK:

(1) Voltage: 2.9 – 3.7 V

(2) Voltage: 0.5 V or less

OK	Go to step 24.

NG

23	Check for open and short in harness and connector between vapor pressure sensor and ECM (See page IN–27).

NG → Repair or replace harness or connector.

OK →

Replace vapor pressure sensor.

24	Check fuel tank for cracks and damage.

NG → Replace fuel tank

OK →

It is likely that vehicle user did not properly close fuel tank cap. Please explain to customer how to properly install fuel tank cap.

OBD II scan tool (excluding hand–held tester):

1	Check that fuel tank cap is TOYOTA genuine parts.

NG → Replace to TOYOTA genuine parts.

OK →

2	Check that fuel tank cap is correctly installed.

NG → Correctly install fuel tank cap.

OK →

3	**Check fuel tank cap (See page EC–8).**

NG → **Replace fuel tank cap.**

OK

4	**Check filler neck for damage.**

PREPARATION:
Remove the fuel tank cap.
CHECK:
Visually inspect the filler neck for damage.

NG → **Replace filler pipe.**

OK

5	**Check whether hose close to fuel tank have been modified, and check whether there are signs of any accident near fuel tank or charcoal canister.**

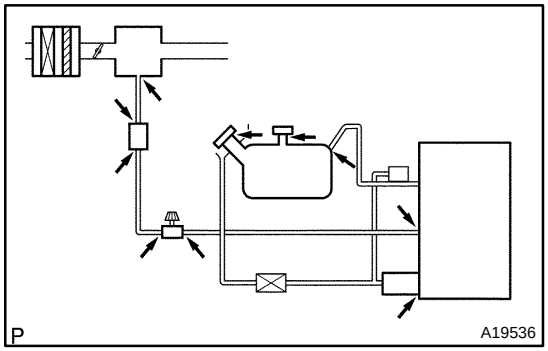

CHECK:
Check for cracks, deformation and loose connection of the following parts:

- Fuel tank
- Charcoal canister
- Fuel tank filler pipe
- Hoses and tubes around fuel tank and charcoal canister

NG → **Repair or replace.**

OK

6	**Check vacuum hoses between vapor pressure sensor and fuel tank, charcoal canister and charcoal canister.**

CHECK:

(a) Check that the vacuum hose is connected correctly.
(b) Check the vacuum hose for looseness and disconnection.
(c) Check the vacuum hose for cracks, hole and damage.

NG → **Repair or connect vacuum hoses.**

OK

7	**Check hose and tube between fuel tank and charcoal canister.**

CHECK:

(a) Check for proper connection of the fuel tank and fuel EVAP pipe (See page EC–8), fuel EVAP pipe and fuel tube under the floor, fuel tube under the floor and charcoal canister.
(b) Check the hose and tube for cracks, hole and damage.

NG → **Repair or replace.**

OK

8	**Check VSV connector for EVAP, VSV connector for CCV and vapor pressure sensor connector for looseness and disconnection.**

NG → **Repair or connect VSV or sensor connector.**

OK

9	Check hoses and tube (purge line and EVAP line).

CHECK:

(a) Check that the vacuum hose is connected correctly.
(b) Check the vacuum hose for looseness and disconnection.
(c) Check the vacuum hose for cracks, hole damage and blockage.

NG → **Repair or replace.**

OK

10	Check voltage between terminals VC and E2 of ECM connector.

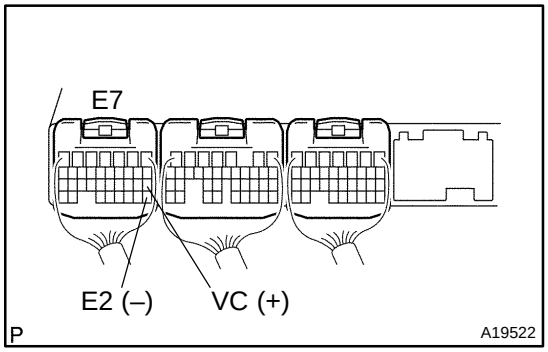

CHECK:

(a) Remove the grove compartment (See page SF–54).
(b) Turn the ignition switch ON.

CHECK:

Measure the voltage between terminals VC and E2 of the ECM connector.

OK:

Voltage: 4.5 – 5.5 V

NG → **Check and replace ECM (See page IN–27).**

OK

11	Check voltage between terminals PTNK and E2 of ECM connectors.

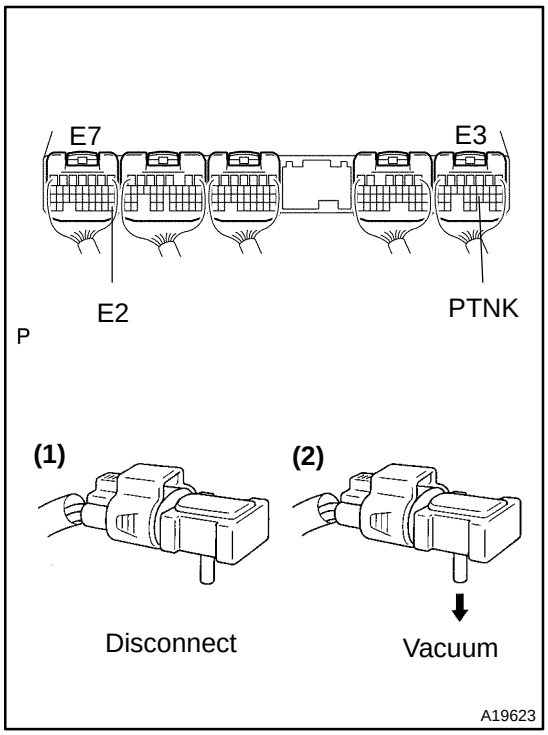

PREPARATION:

(a) Remove the grove compartment (See page SF–54).

(b) Turn the ignition switch ON.

CHECK:

Measure the voltage between terminals PTNK and E2 of the ECM connectors.

(1) Disconnect the vapor pressure sensor.

(2) Using the MITYVAC (Hand–Held Vacuum Pump), apply a vacuum of 4.0 kPa (30 mmHg, 1.18 in.Hg) to the vapor pressure sensor.

NOTICE:

The vacuum applied to the vapor pressure sensor must be less than 66.7 kPa (500 mmHg, 19.7 in.Hg).

OK:

(1) Voltage: 2.9 – 3.7 V

(2) Voltage: 0.5 V or less

OK → **Go to step 13.**

NG

12	Check for open and short in harness and connector between vapor pressure sensor and ECM (See page IN–27).

NG → **Repair or replace harness or connector.**

OK

Replace vapor pressure sensor.

13	Check VSV for EVAP.

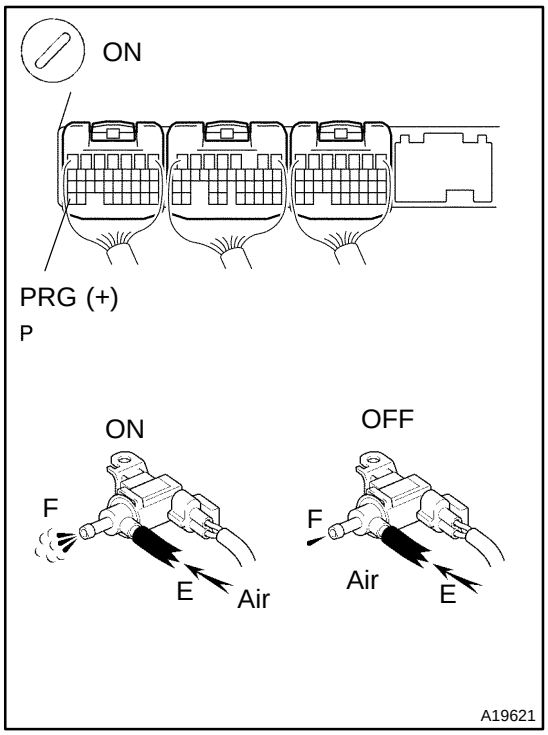

PREPARATION:

(a) Remove the glove compartment (See page SF–54).

(b) Turn the ignition switch ON.

CHECK:

Check the VSV function.

(1) Connect between terminal PRG of the ECM connector and body ground (ON).

(2) Disconnect between terminal PRG of the ECM connector and body ground (OFF).

OK:

(1) VSV is ON:
Air from port E flows out through port F.
(2) VSV is OFF:
Air does not flow from port E to port F.

OK	Go to step 16.

NG

14	Check operation of VSV for EVAP (See page SF–38).

OK	Go to step 15.

NG

Replace VSV and clean vacuum hoses between throttle body and VSV for EVAP, and VSV for EVAP and charcoal canister, and then check charcoal canister.

15	**Check for open and short in harness and connector between EFI main relay (Marking: EFI) and VSV for EVAP, and VSV for EVAP and ECM (See page IN–27).**

NG → **Repair or replace harness or connector.**

OK

Check and replace ECM (See page IN–27).

16	**Check VSV for CCV.**

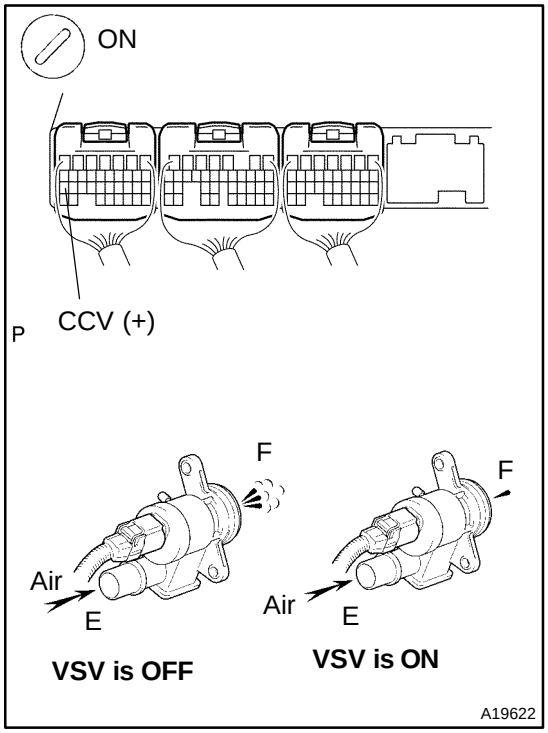

PREPARATION:

(a) Remove the grove compartment (See page SF–54).

(b) Turn the ignition switch ON.

CHECK:

Check the VSV function.

(1) Connect between terminal CCV of the ECM connector and body ground (ON).

(2) Disconnect between terminal CCV of the ECM connector and body ground (OFF).

OK:

VSV is ON:
Air does not flow from port E to port F.
VSV is OFF:
Air from port E flows out through port F.

OK → **Go to step 20.**

NG

17	Check charcoal canister filter (Check that charcoal canister filter is not clogged).

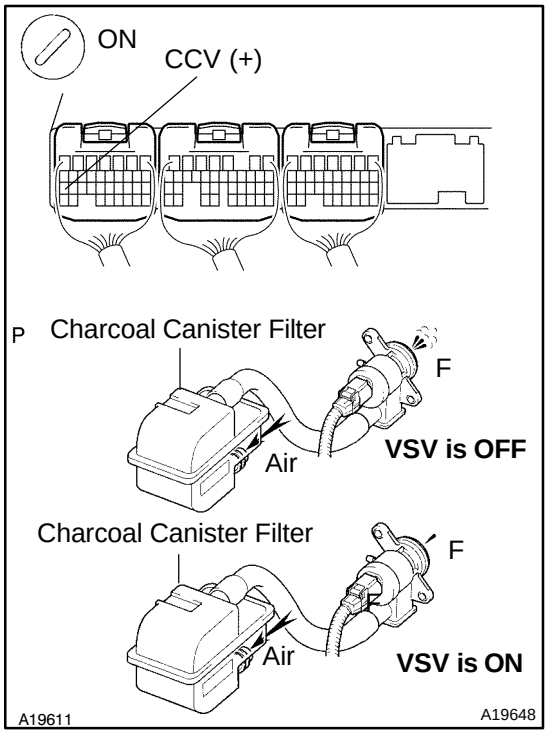

PREPARATION:

(a) Remove the grove compartment (See page SF–54).

(b) Turn the ignition switch ON.

CHECK:

Check the VSV function.

(1) Connect between terminal CCV of the ECM connector and body ground (ON).

(2) Disconnect between terminal CCV of the ECM connector and body ground (OFF).

OK:

VSV is ON:
Air does not flow from charcoal canister filter port to port F.
VSV is OFF:
Air from charcoal canister filter port flows out through port F.

NG	Replace charcoal canister filter.

OK

18	Check operation of VSV for CCV (See page SF–41).

OK	Go to step 19.

NG

Replace VSV and charcoal canister, and then check leakage for between charcoal canister and VSV for CCV.

19	Check for open and short in harness and connector between EFI main relay (Marking: EFI) and VSV for CCV, and VSV for CCV and ECM (See page IN–27).

NG → Repair or replace harness or connector.

OK ↓

Check and replace ECM (See page IN–27).

20	Check the fuel tank over fill check valve (See page EC–8).

NG → Replace fuel tank over fill check valve or fuel tank.

OK ↓

Check and replace charcoal canister (See page EC–8).

DTC	P0451	Evaporative Emission Control System Pressure Sensor/Switch Range/Performance

DTC	P0452	Evaporative Emission Control System Pressure Sensor/Switch Low Input

DTC	P0453	Evaporative Emission Control System Pressure Sensor/Switch High Input

CIRCUIT DESCRIPTION

The vapor pressure sensor and the vsv for the canister closed valve (CCV) are used to detect abnormalities in the evaporative emission control system.

The ECM decides whether there is an abnormality in the evaporative emission control system, based on the vapor pressure sensor signal.

DTC P0451, P0452 or P0453 is recorded by the ECM when the vapor pressure sensor malfunction.

Fig. 1

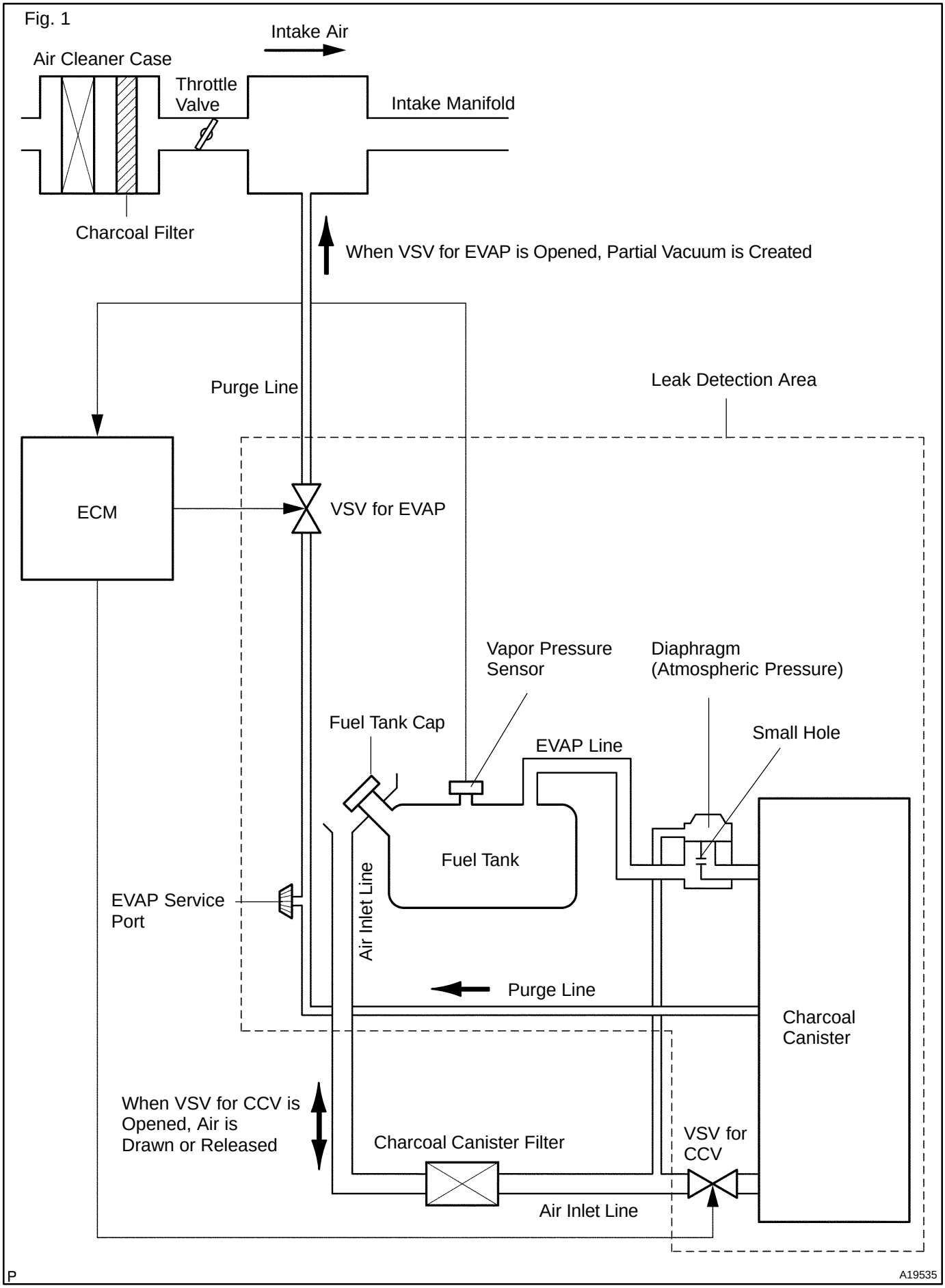
Intake Air
Air Cleaner Case
Throttle Valve
Intake Manifold
Charcoal Filter
When VSV for EVAP is Opened, Partial Vacuum is Created
Purge Line
Leak Detection Area
ECM
VSV for EVAP
Vapor Pressure Sensor
Diaphragm (Atmospheric Pressure)
Fuel Tank Cap
EVAP Line
Small Hole
Fuel Tank
EVAP Service Port
Air Inlet Line
Purge Line
Charcoal Canister
When VSV for CCV is Opened, Air is Drawn or Released
Charcoal Canister Filter
VSV for CCV
Air Inlet Line
P
A19535

DTC No.	DTC Detection Condition	Trouble Area
P0451	Vapor pressure sensor output extremely changes under conditions of (a), (b) and (c): (2 trip detection logic) (a) Vehicle speed: 0 km/h (0 mph) (b) Engine speed: Idling (c) VSV for vapor pressure sensor is ON	▲Open or short in vapor pressure sensor circuit ▲Vapor pressure sensor ▲ECM
P0452	10 seconds or more after engine starting condition (Vapor pressure sensor value < –4.0 kPa (–30 mmHg, –1.2 in.Hg)) continues for 7 seconds or more: (2 trip detection logic)	
P0453	10 seconds or less after engine starting condition (Vapor pressure sensor value < 2.0 kPa (15 mmHg, 0.6 in.Hg)) continues for 7 seconds or more: (2 trip detection logic)	

WIRING DIAGRAM

Refer to DTC P0441 DI–303.

INSPECTION PROCEDURE

HINT:

- ▲ If different DTCs that are related to different systems are output simultaneously while terminal E2 is used as a ground terminal, terminal E2 may be open.
- ▲ If DTC P0451, P0452, P0453 is output after DTC P0441, P0442, P0446, P0456 first troubleshoot DTC P0441, P0452 or P0453. If no other malfunction is detected, troubleshoot DTC next P0451, P0452, P0453.
- ▲ Read freeze frame data using hand–held tester or OBD II scan tool, as freeze frame data records the engine conditions when a malfunction is detected. When troubleshooting, it is useful for determining whether the vehicle was running or stopped, the engine was warmed up or not, the air–fuel ratio was lean or rich, etc. at the time of the malfunction.
- ▲ When the ENGINE RUN TIME in the freeze frame data is less than 200 seconds, carefully check the the vapor pressure sensor.

1	**Check voltage between terminals VC and E2 of ECM connector (See page DI–303, step 21).**

NG → **Check and replace ECM (See page IN–27).**

OK

2	Check voltage between terminals PTNK and E2 of ECM connectors (See page DI–303, step 22).

OK → Check and replace ECM (See page IN–27).

NG

3	Check for open and short in harness and connector between vapor pressure sensor and ECM (See page IN–27).

NG → Repair or replace harness or connector.

OK

Replace vapor pressure sensor.

DIA8E–01

DTC	P0500	Vehicle Speed Sensor ”A”

DTC	P0503	Vehicle Speed Sensor ”A” Intermittent/Erratic/High

CIRCUIT DESCRIPTION

The vehicle speed sensor outputs a 4–pulse signal for every revolution of the rotor shaft, which is rotated by the transmission output shaft via the driven gear. After this signal is converted into a more precise rectangular waveform by the waveform shaping circuit inside the combination meter, it is then transmitted to the ECM. The ECM determines the vehicle speed based on the frequency of these pulse signals.

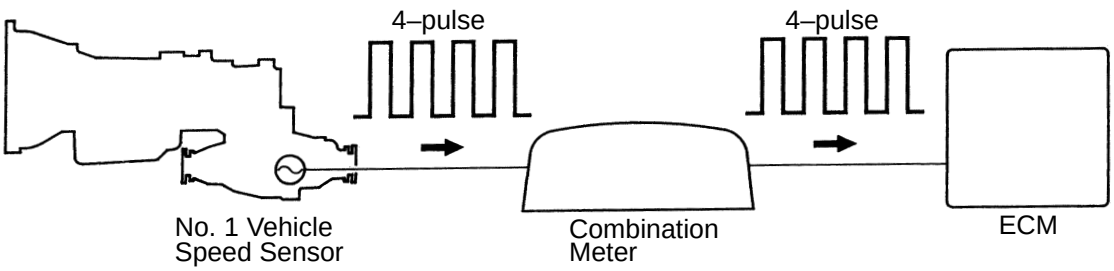

P22487

DTC No.	DTC Detecting Condition	Trouble Area
P0500 P0503	ECM detects following condition simultaneously for 500 times (2–trip detection logic) ▲No SP1 (No. 1 speed sensor) signal while ECM detects SP2 (No. 2 speed sensor) signal ▲Vehicle speed is 9 km/h (6 mph) or more for 4 sec. ▲Park/neutral position switch is OFF (Except P and N position) ▲Transfer is except N position (4WD)	▲Open or short in No. 1 vehicle speed sensor circuit ▲No. 1 vehicle speed sensor ▲Combination meter ▲ECM

WIRING DIAGRAM

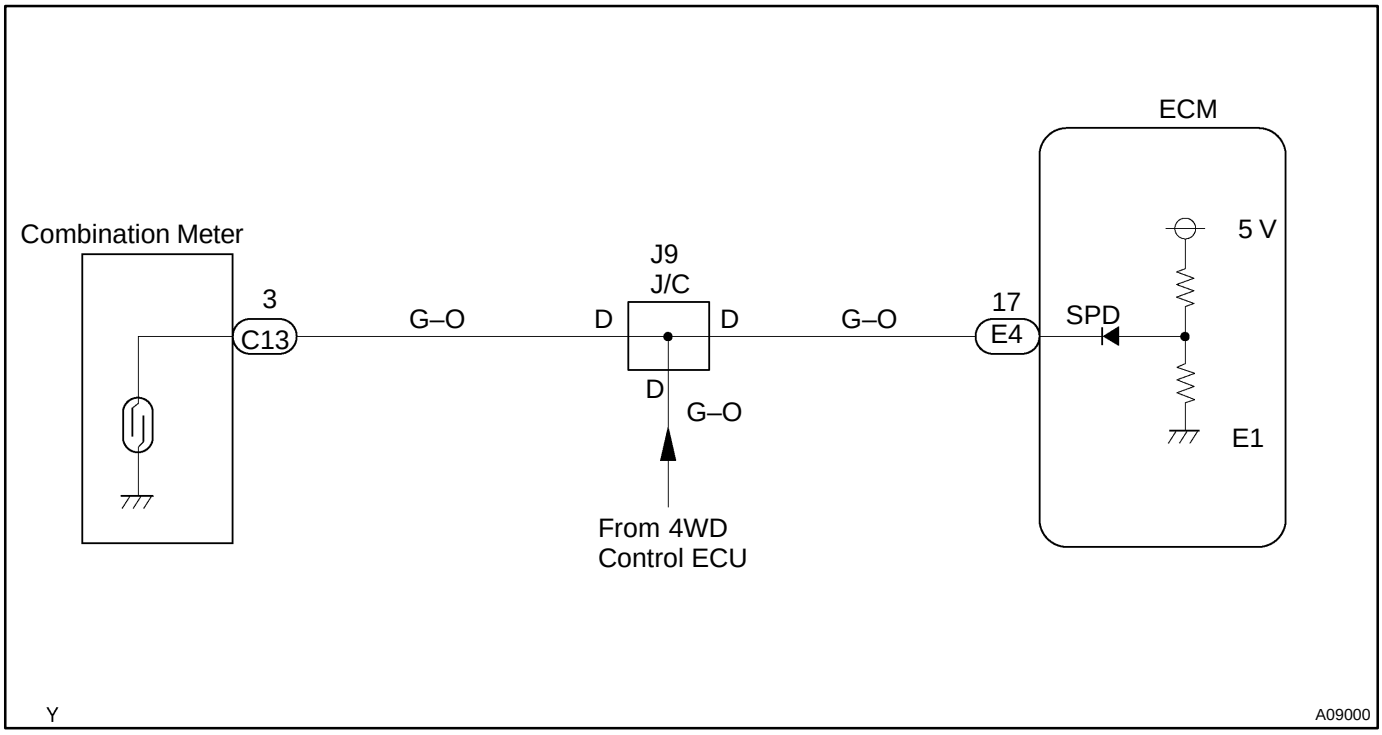

INSPECTION PROCEDURE

1	**Check operation of speedometer.**

CHECK:

Drive the vehicle and check if the operation of the speedometer in the combination meter is normal.

HINT:

The vehicle speed sensor is operating normally if the speedometer display is normal.

OK	**Go to step 5.**

NG

2	Check power source for No. 1 vehicle speed sensor.

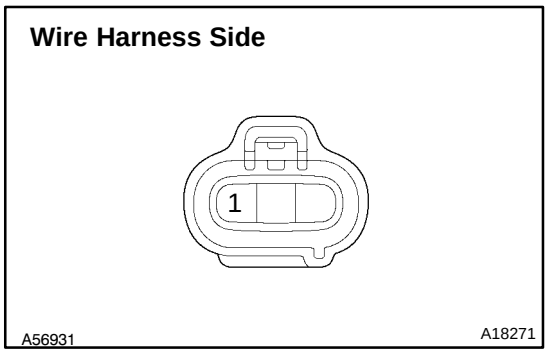

CHECK:

(a) Disconnect the sensor connector.
(b) Turn the ignition switch ON.
(c) Measure the voltage between the terminal 1 on the wire harness side connector and a known good ground.

OK:

Voltage: 10 – 14 V

NG	Repair or replace wire harness between sensor and power source circuit.

OK

3	Check No. 1 vehicle speed sensor.

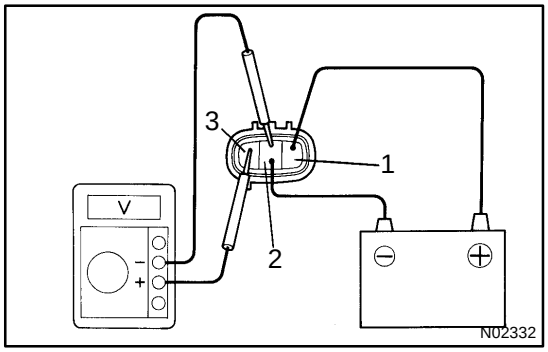

CHECK:

(a) Remove the sensor.
(b) Connect the voltage meter and battery as shown in the illustration.
(c) Measure the voltmeter when rotating the sensor shaft.

OK:

The voltage changes between 0 V and battery voltage.

NG	Replace speed sensor.

OK

4	**Check harness and connector between combination meter and No. 1 vehicle speed sensor.**

NG → **Repair or replace harness and connector between combination meter and sensor.**

OK

Replace combination meter.

5	**Check harness and connector between combination meter and ECM.**

NG → **Repair or replace harness and connector between combination meter and ECM.**

OK

Replace ECM.

DIA8F–01

DTC	P0504	Brake Switch ”A”/”B”Correlation

CIRCUIT DESCRIPTION

In this system, the signal of the stop light switch is used to judge whether the acceleration system is abnormal or not.

The stop light switch has a duplex system (signals STP and ST1–) to memorize the abnormality when the signals of depressing and releasing the brake pedal are detected simultaneously.

HINT:

Normal condition is as shown in the table.

Signal	Brake pedal released	In transition	Brake pedal depressed
STP	OFF	ON	ON
ST1–	ON	ON	OFF

DTC No.	DTC Detection Condition	Trouble Area
P0504	Condition (a), (b) and (c) continue for 0.5 sec. or more (a) Ignition switch ON (b) Brake pedal released (c) STP signal is OFF when the ST1– signal is OFF	▲Short in stop light switch signal circuit ▲Stop light switch ▲ECM

WIRING DIAGRAM

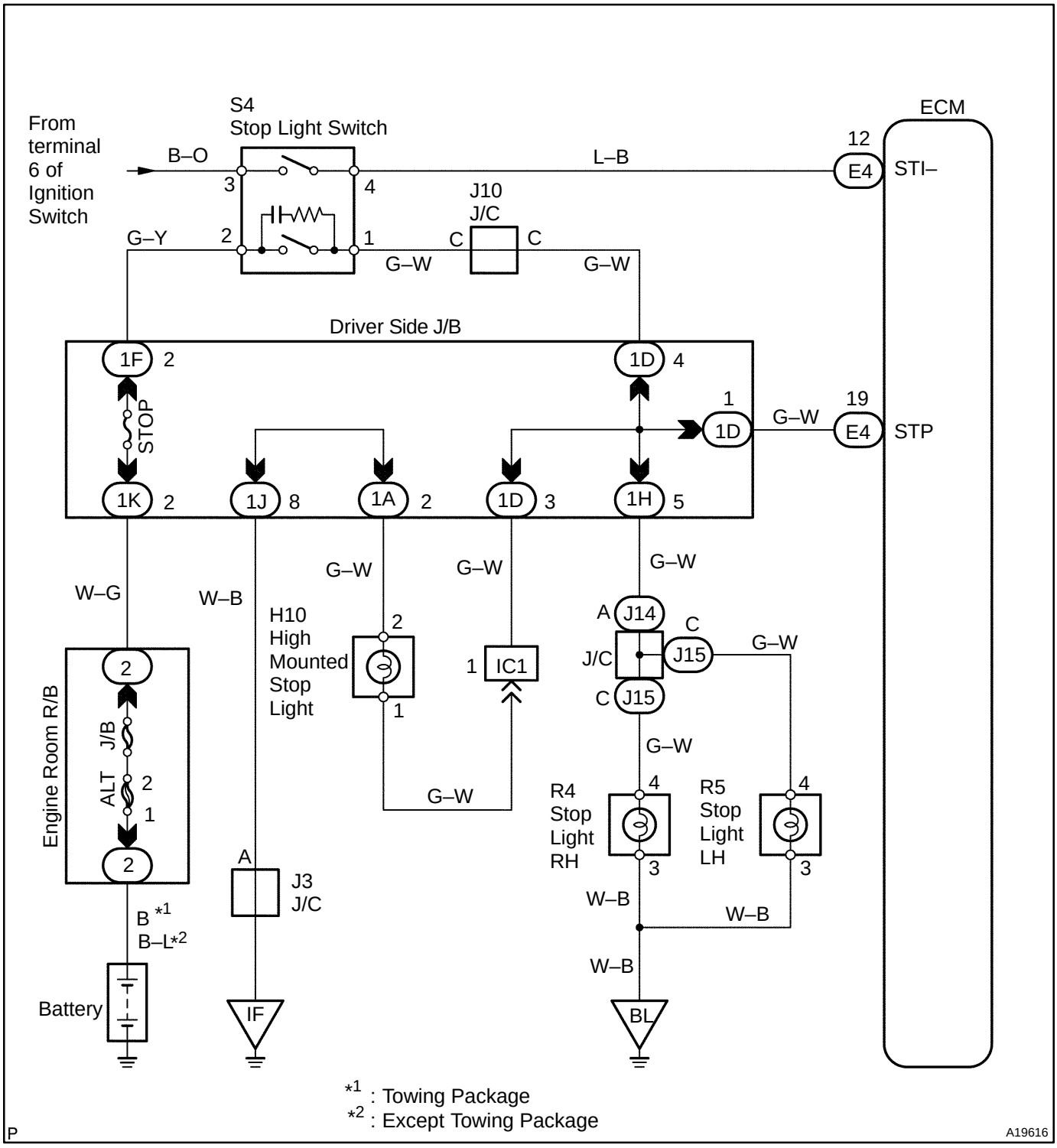

INSPECTION PROCEDURE

HINT:

Read freeze frame data using hand–held tester or OBD II scan tool, as freeze frame data records the engine conditions when a malfunction is detected. When troubleshooting, it is useful for determining whether the vehicle was running or stopped, the engine was warmed up or not, the air–fuel ratio was lean or rich, etc. at the time of the malfunction.

1	**Check operation of stop light.**

PREPARATION:

Check if the stop lights come on and go off normally when the brake pedal is depressed and released.

NG → **Check and repair stop light circuit (See page BE–39).**

OK

2	Check STP and ST1– signals.

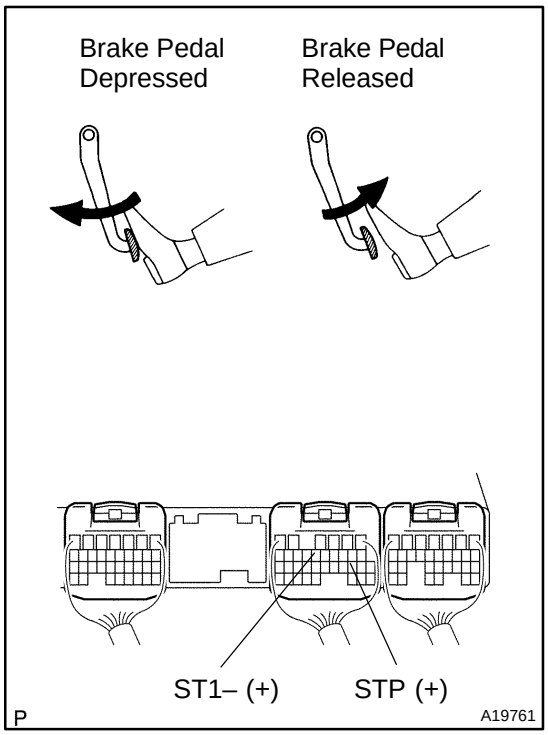

When using hand–held tester:

PREPARATION:

(a) Connect the hand–held tester to the DLC3.

(b) Turn the ignition switch ON, and push the hand–held tester main switch ON.

CHECK:

(a) Read the STP signal on the hand–held tester.

(b) Check the voltage between terminal ST1– of the ECM connector and the body ground.

OK:

Brake Pedal	STP signal	ST1– terminal voltage
Depressed	ON	Below 1.5 V
Released	OFF	7.5 – 14 V

When not using hand–held tester:

PREPARATION:

(a) Remove the glove compartment (See page SF–54).

(b) Turn the ignition switch ON.

CHECK:

Check the voltage between terminals STP and ST1– of the ECM connector and the body ground.

OK:

Brake Pedal	STP terminal voltage	ST1– terminal voltage
Depressed	7.5 – 14 V	Below 1.5 V
Released	Below 1.5 V	7.5 – 14 V

OK → **Check for intermittent problems (See page DI–194).**

NG

3	Check for harness and connector between ECM and stop light switch (See page IN–27).

NG → **Repair or replace harness or connector.**

OK

Check and replace ECM (See page IN–27).

DI1LY–12

DTC	P0505	Idle Air Control System

CIRCUIT DESCRIPTION

The idle speed is controlled by the Electric Throttle Control System (ETCS).
ETCS is composed of the throttle motor to operate the throttle valve, the magnetic clutch to connect the throttle motor to the throttle valve, the throttle position sensor to detect the opening angle of the throttle valve, the accelerator pedal position sensor to detect the accelerator pedal position, the ECM to control the ETCS, and the one valve type throttle body.
The ECM controls the throttle motor to make the throttle valve opening angle properly for the target idle speed.

DTC No.	DTC Detection Condition	Trouble Area
P0505	Idle speed continues to vary greatly from target speed (2 trip detection logic)	▲Air induction system ▲Electric throttle control system ▲PCV valve and hose

INSPECTION PROCEDURE

HINT:
Read freeze frame data using hand–held tester or OBD II scan tool, as freeze frame data records the engine conditions when a malfunction is detected. When troubleshooting it is useful for determining whether the vehicle was running or stopped, the engine was warmed up or not, the air–fuel ratio was lean or rich, etc. at the time of the malfunction.

1	**Are there any other codes (besides P0505) being output?**

YES → **Go to relevant DTC chart (See page DI–205).**

NO

2	**Check connection of PCV valve and hose.**

NG → **Repair or replace PCV valve and hose**

OK

3	Check air induction system (See page SF–1).

NG → Repair or replace.

OK

Check electric throttle control system (See page SF–29).

DIA8G–01

DTC	P0560	System Voltage

CIRCUIT DESCRIPTION

Battery positive voltage is supplied to terminal BATT of the ECM, even when the ignition switch is OFF for use by the DTCs memory and air–fuel ratio adoptive control value memory, etc.

DTC No.	DTC Detection Condition	Trouble Area
P0560	Open in back up power source circuit	▲Open in back up power source circuit ▲ECM

HINT:

If DTC P0560 appears, the ECM does not store another DTC.

WIRING DIAGRAM

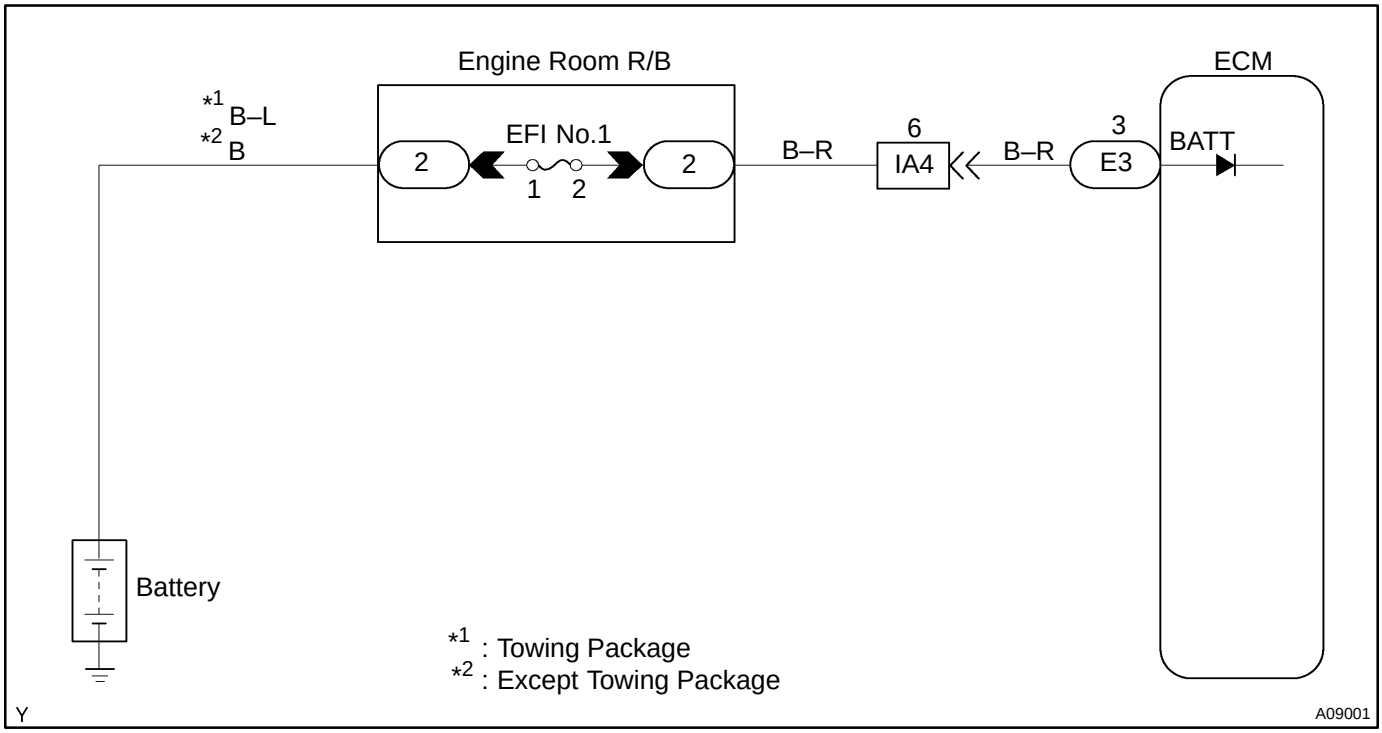

INSPECTION PROCEDURE

HINT:

Read freeze frame data using hand–held tester or OBD II scan tool, as freeze frame data records the engine conditions when a malfunction is detected. When troubleshooting, it is useful for determining whether the vehicle was running or stopped, the engine was warmed up or not, the air–fuel ratio was lean or rich, etc. at the time of the malfunction.

1	Check voltage between terminal BATT of ECM connector and body ground.

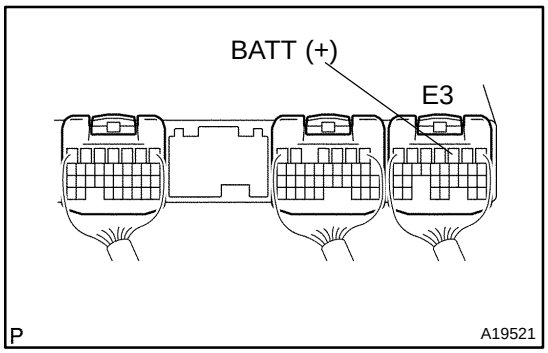

PREPARATION:
Remove the glove compartment (See page SF–55).
CHECK:
Measure the voltage between terminal BATT of the ECM connector and the body ground.
OK:
Voltage: 9 – 14 V

OK → **Check and replace ECM (See page IN–27).**

NG

2	Check EFI No.1 fuse.

PREPARATION:
Remove the EFI No.1 fuse from the engine room R/B.
CHECK:
Check the continuity of the EFI No.1 fuse.
OK:
Continuity

NG → **Check for short in all harness and components connected to EFI No.1 fuse.**

OK

Check and repair harness or connector between battery and EFI No.1 fuse, and EFI No.1 fuse and ECM (See page IN–27).

DIA8H–01

DTC	P0571	Brake Switch ”A” Circuit

CIRCUIT DESCRIPTION

This signal is used to detect when the brakes have been applied. The STP signal voltage is the same as the voltage supplied to the stop lights.
The STP signal is used mainly to control the fuel cutoff engine speed. (The fuel cutoff engine speed is reduced slightly when the vehicle is braking.)

DTC No.	DTC Detection Condition	Trouble Area
P0571	Stop light switch does not turn off even once the vehicle is driven (with cruise control function) (2 trip detection logic)	▲Short in stop light switch signal circuit ▲Stop light switch ▲ECM

WIRING DIAGRAM

Refer to DTC P0504 on page DI–338.

INSPECTION PROCEDURE

Refer to DTC P0504 on page DI–338.

DIA8I–01

DTC	P0604	Internal Control Module Randam Access Memory (RAM) Error

DTC	P0606	ECM/PCM Processor

DTC	P0607	Control Module Performance

DTC	P0657	Actuator Supply Voltage Circuit / Open

CIRCUIT DESCRIPTION

Refer to DTC P2119 on page DI–360.

DTC No.	DTC Detection Condition	Trouble Area
P0604 P0606 P0607 P0657	ECM malfunction	ECM

INSPECTION PROCEDURE

HINT:

Read freeze frame data using hand–held tester or OBD II scan tool, as freeze frame data records the engine conditions when a malfunction is detected. When troubleshooting, it is useful for determining whether the vehicle was running or stopped, the engine was warmed up or not, the air–fuel ratio was lean or rich, etc. at the time of the malfunction.

Replace ECM.

DIA8J–01

DTC	P0617	Starter Relay Circuit High

CIRCUIT DESCRIPTION

While the engine is being cranked, the battery positive voltage is applied to terminal STA of the ECM.

DTC No.	DTC Detection Condition	Trouble Area
P0617	When all conditions (a), (b) and (c) are satisfied with battery (+B) voltage 10.5 V or more (a) Vehicle speed < 20 km/h (12 mph) (b) Engine revolution < 1,000 rpm (c) STA signal ON	▲Starter relay ▲Park/neutral position (PNP) switch (A/T) ▲Clutch start switch (M/T) ▲ECM

WIRING DIAGRAM

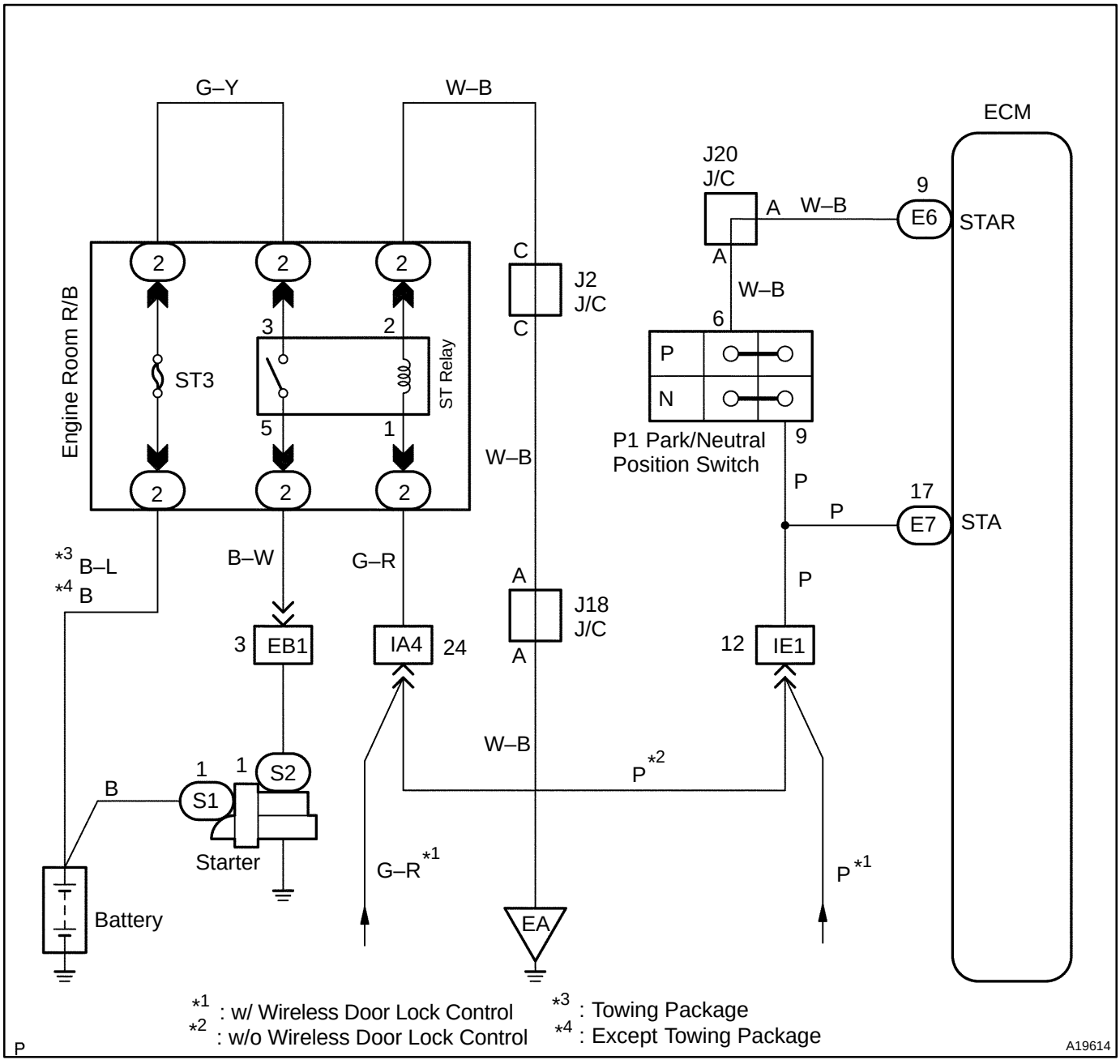

INSPECTION PROCEDURE

HINT:

Read freeze frame data using the hand–held tester or OBD II scan tool, as freeze frame data records the engine conditions when a malfunction is detected. When troubleshooting, it is useful for determining whether the vehicle was running or stopped, the engine was warmed up or not, the air–fuel ratio was lean or rich, etc. at the time of the malfunction.

Hand–held tester:

1	**Connect hand–held tester, and check STA signal.**

PREPARATION:

(a) Connect the hand–held tester to the DLC3.

(b) Turn the ignition switch ON and push the hand–held tester main switch ON.

CHECK:

Read the STA signal on the hand–held tester while the starter operates.

OK:

Ignition Switch Position	ON	START
STA Signal	OFF	ON

OK → **Check and replace ECM (See page IN–27)**

NG

2	**Check starter relay (Marking ST) (See page ST–20).**

NG → **Replace starter relay.**

OK

3	**Check ignition switch (See page BE–15).**

NG → **Replace ignition switch.**

OK

4	Check park/neutral position (PNP) switch (A/T) (See page DI–408) or clutch start switch (M/T) (See page CL–2).

NG → Replace park/neutral position switch or clutch start switch.

OK

5	Check for open in harness and connector between ECM and park/neutral position (PNP) switch (A/T) (See page DI–408) or clutch start switch (M/T) (See page IN–27).

NG → Repair or replace harness or connector.

OK

Check and replace ECM (See page IN–27).

OBD II scan tool (excluding hand–held tester):

1	Check voltage between terminal STA of ECM connector and body ground.

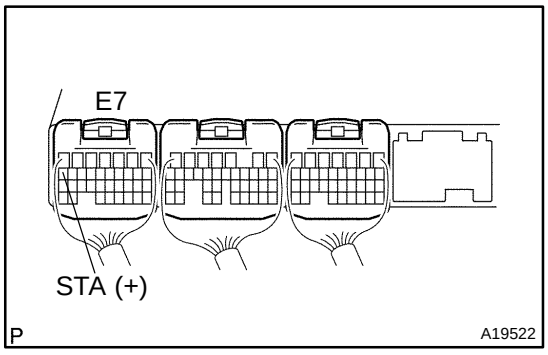

PREPARATION:
Remove the glove compartment (See page SF–49).
CHECK:
Measure the voltage between terminal STA of the ECM connector and the body ground, during the engine cranking (ignition switch START position) and does not engine cranking (ignition switch position ON).
OK:

Voltage:
6 V or more (ignition switch START position)
0 V (ignition switch ON position)

OK → Check and replace ECM (See page IN–27)

NG

2	Check ignition switch (See page BE–15).

NG → Replace ignition switch.

OK

3	Check park/neutral position (PNP) switch (A/T) (See page DI–408) or clutch start switch (M/T) (See page CL–2).

NG → Replace park/neutral position switch or clutch start switch.

OK

4	Check for open in harness and connector between ECM and park/neutral position (PNP) switch (A/T) (See page DI–408) or clutch start switch (M/T) (See page IN–27).

NG → Repair or replace harness or connector.

OK

Check and replace ECM (See page IN–27).

DIA8K–01

DTC	P0705	Transmission Range Sensor Malfunction (PRNDL Input)

CIRCUIT DESCRIPTION

The park/neutral position switch comes on when the shift lever is in the N or P shift position. When it comes on, terminal NSW of the ECM is grounded to the body ground via the starter relay, thus the terminal NSW voltage becomes 0 V. When the shift lever is in the D, 2, L or R position, the park/neutral position switch goes off, so the voltage of terminal NSW becomes battery positive voltage and the voltage of the ECM internal power source.
If the shift lever is moved from the N position to the D position, this signal is used for air–fuel ratio correction and for idle speed control (estimated control), etc.

DTC No.	DTC Detection Condition	Trouble Area
P0705	2 or more switches are ON simultaneously for N, 2, L and R positions (2 trip detection logic)	▲Short in park/neutral position switch circuit ▲Park/neutral position switch ▲ECM

HINT:
After confirming DTC P0705 use the hand–held tester to confirm the PNP switch signal from the CURRENT DATA.

WIRING DIAGRAM

Refer to DTC P0705 on page DI–408.

INSPECTION PROCEDURE

Refer to DTC P0705 on page DI–408.
HINT:
Read freeze frame data using hand–held tester or OBD II scan tool, as freeze frame data records the engine conditions when a malfunction is detected. When troubleshooting, it is useful for determining whether the vehicle was running or stopped, the engine was warmed up or not, the air–fuel ratio was lean or rich, etc. at the time of the malfunction.

DIA8L–01

DTC	P2102	Throttle Actuator Control Motor Circuit Low

DTC	P2103	Throttle Actuator Control Motor Circuit High

CIRCUIT DESCRIPTION

The throttle motor is operated by the ECM and it opens and closes the throttle valve.
The opening angle of the throttle valve is detected by the throttle position sensor which is mounted on the throttle body. And it provides feedback to the ECM to control the throttle motor in order to the throttle valve opening angle properly in response to the driving condition.
If this DTC is stored, the throttle valve is locked at a certain opening angle. Also, the whole electronically controlled throttle operation is cancelled until the system returns to normal and the ignition switch is turned OFF.

DTC No.	DTC Detection Condition	Trouble Area
P2102 P2103	Conditions (a) and (b) continue for 2 sec.: (a) Throttle control motor output duty < 80 % (b) Throttle control motor current < 0.5 A	▲Open or short in throttle control motor circuit ▲Throttle control motor ▲ECM
	Throttle control motor current < 10 A	
	Condition (a) continues for 0.6 sec.: (a) Throttle control motor current < 7 A	

WIRING DIAGRAM

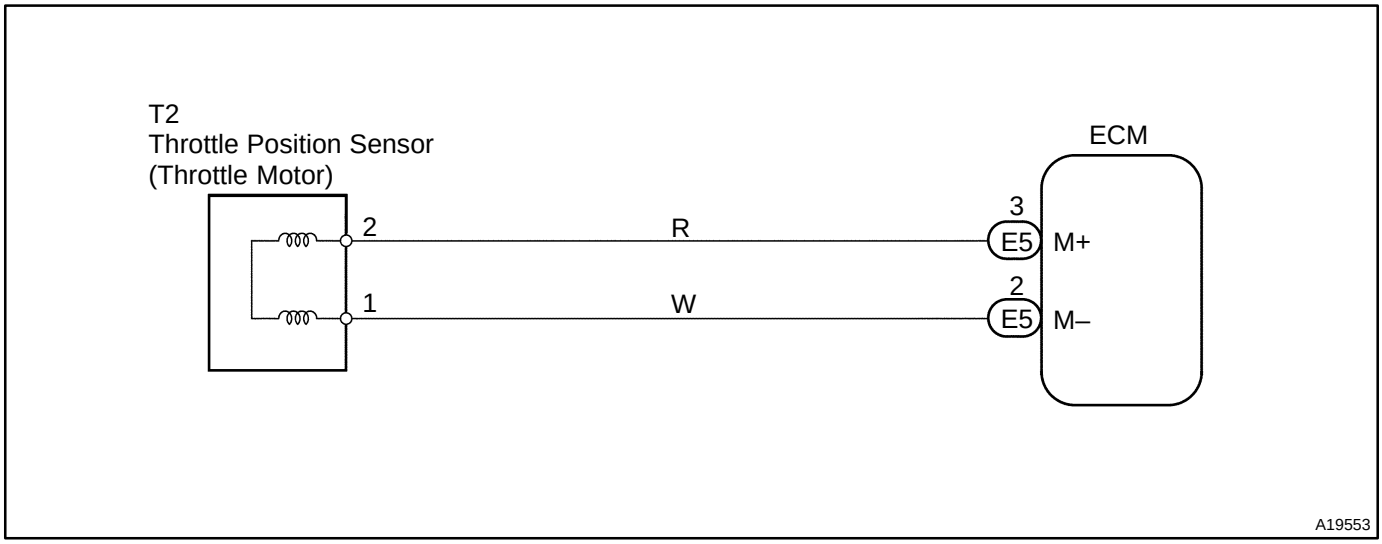

INSPECTION PROCEDURE

HINT:

Read freeze frame data using hand–held tester or OBD II scan tool, as freeze frame data records the engine conditions when a malfunction is detected. When troubleshooting, it is useful for determining whether the vehicle was running or stopped, the engine was warmed up or not, the air–fuel ratio was lean or rich, etc. at the time of the malfunction.

1	Check throttle control motor circuit.

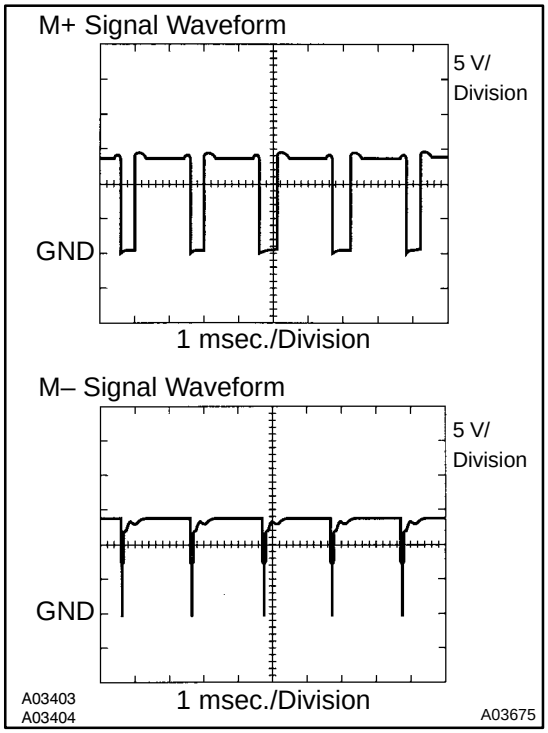

When not using hand–held tester:

PREPARATION:

(a) Connect an oscilloscope between terminals M+ or M– and E1 of the ECM connector.

(b) Start the engine.

CHECK:

Check the waveform between terminals M+ or M– and E1 of the ECM when the engine is idling.

OK:

The correct waveforms are as shown.

HINT:

The waveform frequency varies depending on the throttle opening.

OK → **Check and replace ECM (See page IN–27).**

NG

2	Check throttle control motor.

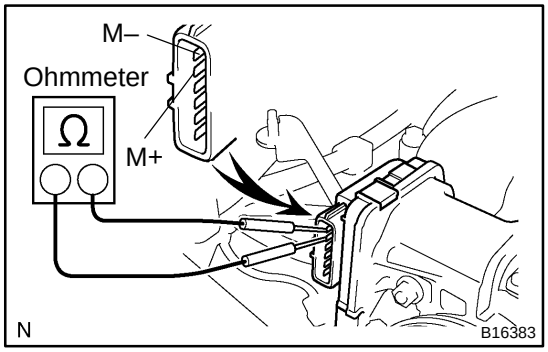

PREPARATION:

Disconnect the throttle control motor connector.

CHECK:

Measure the resistance between terminals 1 and 2 of the throttle control motor.

OK:

Resistance: 0.3 – 100 Ω at 20˚C (68˚F)

NG → **Replace throttle control motor (See page SF–32).**

OK

3	**Check for open and short in harness and connector between throttle control motor and ECM (See page IN–27).**

NG → **Repair or replace.**

OK

Check and replace ECM (See page IN–27).

DIA8M–01

DTC	P2111	Throttle Actuator Control System –Stuck Open

DTC	P2112	Throttle Actuator Control System –Stuck Closed

CIRCUIT DESCRIPTION

The throttle motor is operated by the ECM and it opens and closes the throttle valve. The opening angle of the throttle valve is detected by the throttle position sensor which is mounted on the throttle body. And, it provides feedback to the ECM to control the throttle motor in order to make the throttle valve opening angle properly in response to the driving condition. If this DTC is stored, the throttle valve is locked at a certain opening angle. Also, the whole electronically controlled throttle operation is cancelled until the system returns to normal and the ignition switch is turned OFF.

DTC No.	DTC Detection Condition	Trouble Area
P2111 P2112	Lock throttle control motor during control of throttle control motor	▲Throttle control motor ▲Throttle body

WIRING DIAGRAM

Refer to DTC P2102 DI–353.

INSPECTION PROCEDURE

HINT:

Read freeze frame data using hand–held tester or OBD II scan tool, as freeze frame data records the engine conditions when a malfunction is detected. When troubleshooting, it is useful for determining whether the vehicle was running or stopped, the engine was warmed up or not, the air–fuel ratio was lean or rich, etc. at the time of the malfunction.

1	**Check throttle control motor (See page DI–353, step 2).**

NG → **Replace throttle control motor (See page SF–32).**

OK

2	**Visually check throttle valve.**

PREPARATION:

Remove the intake air connector.

CHECK:

Check whether or not there is a foreign objects between the throttle valve and the housing.

NG → **Remove a foreign objects and clean throttle body.**

OK

Replace throttle body.

DIA8N–01

DTC	P2118	Throttle Actuator Control Motor Current Range/Performance

CIRCUIT DESCRIPTION

Battery positive voltage is supplied to terminal +BM of the ECM even once when the ignition switch is OFF for the electric throttle control system.
If this DTC is stored, the throttle valve is locked at a certain opening angle. Also, the whole electronically controlled throttle operation is cancelled until the system returns to normal and the ignition switch is turned OFF.

DTC No.	DTC Detection Condition	Trouble Area
P2118	Open in ETCS power source circuit	▲Open in ETCS power source circuit ▲ECM

WIRING DIAGRAM

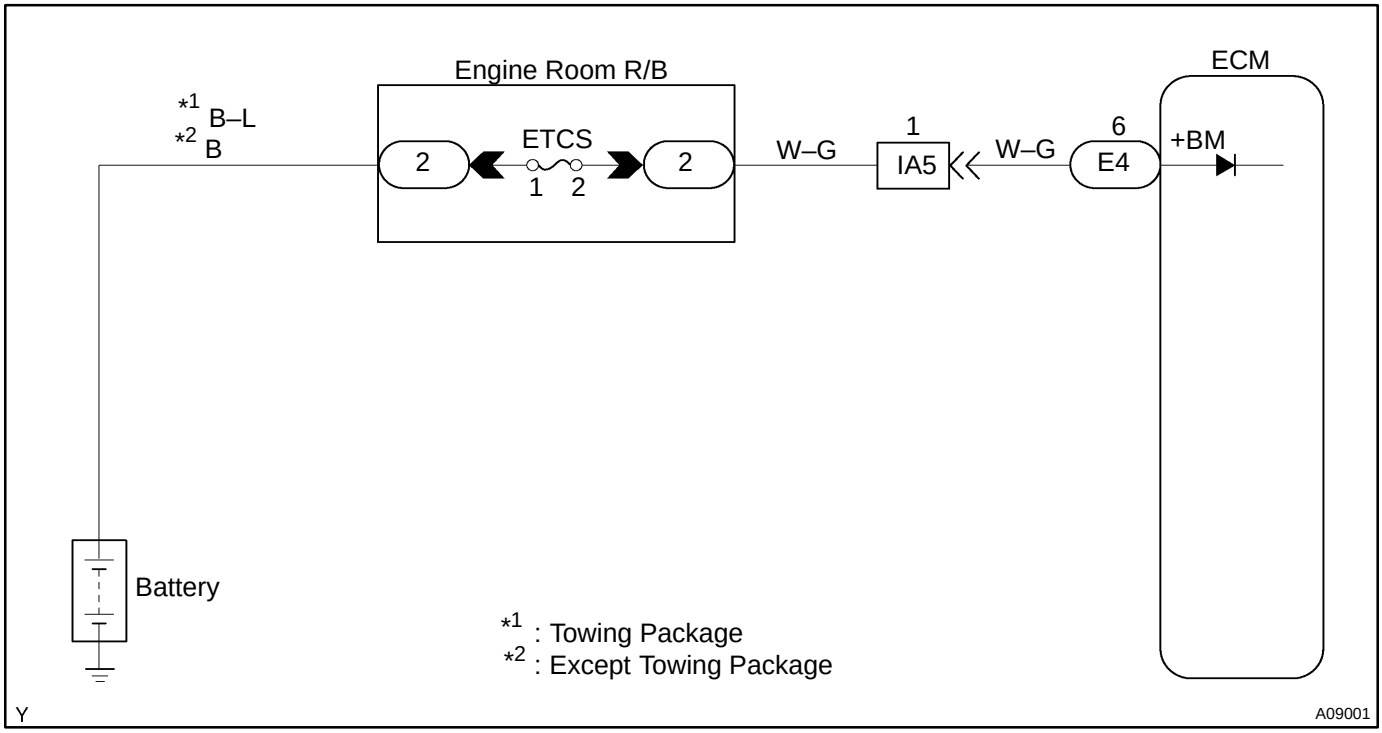

INSPECTION PROCEDURE

HINT:
Read freeze frame data using hand–held tester or OBD II scan tool, as freeze frame data records the engine conditions when a malfunction is detected. When troubleshooting, it is useful for determining whether the vehicle was running or stopped, the engine was warmed up or not, the air–fuel ratio was lean or rich, etc. at the time of the malfunction.

1	**Check ETCS fuse.**

PREPARATION:
Remove the ETCS fuse from the engine room R/B.
CHECK:
Check the continuity of the ETCS fuse.
OK:
Continuity

NG → **Check for short in all harness and components connected to ETCS fuse.**

OK

2	**Check voltage between terminal +BM of ECM connector and body ground.**

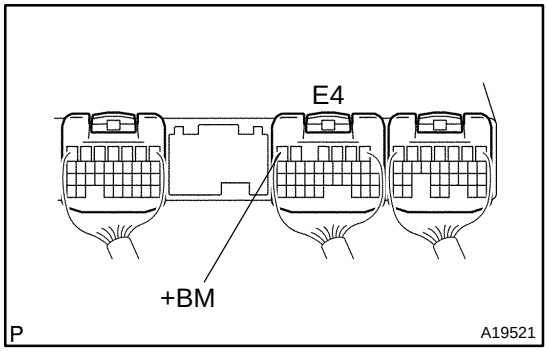

PREPARATION:
Remove the glove compartment (See page SF–55).
CHECK:
Measure the voltage between terminal +BM of the ECM connector and the body ground.
OK:
Voltage: 9 – 14 V

OK → **Check and replace ECM (See page IN–27).**

NG

Check and repair harness or connector between battery and ETCS fuse, and ETCS fuse and ECM (See page IN–27).

DTC	P2119	Throttle Actuator Control Throttle Body Range Performance

CIRCUIT DESCRIPTION

The Electric Throttle Control System (ETCS) is composed of the throttle motor to operate the throttle valve, the throttle position sensor to detect the opening angle of the throttle valve, the accelerator pedal position sensor to detect the accelerator pedal position, the ECM to control the ETCS, and the one valve type throttle body.
The ECM controls the throttle motor to make the throttle valve opening angle properly in response to the driving condition.
The throttle position sensor which is mounted on the throttle body detects the opening angle of the throttle valve, and it provides feedback to the ECM to control the throttle motor.
If the ETCS has a malfunction, the throttle valve is locked at a certain opening angle. Also, the whole electronically controlled throttle operation is cancelled until the system returns to normal and the ignition switch is turned OFF.

DTC No.	DTC Detection Condition	Trouble Area
P2119	Throttle opening angle continues to vary greatly from target throttle opening angle	▲Electric throttle control system ▲ECM

WIRING DIAGRAM

Refer to DTC P2102 on page DI–353.

INSPECTION PROCEDURE

HINT:
Read freeze frame data using hand–held tester or OBD II scan tool, as freeze frame data records the engine conditions when malfunction is detected. When troubleshooting, it is useful for determining whether the vehicle was running or stopped, the engine was warmed up or not, the air–fuel ratio was lean or rich, etc. at the time of the malfunction.

1	**Are there any other codes (besides DTC P2119) being output?**

YES → **Go to relevant DTC chart (See page DI–205).**

NO

Replace ECM, and clear DTC. If DTC P2219 is memorized again, and then replace throttle body.

DTC	P2120	Throttle/Pedal Position Sensor/Switch ”D” Circuit

DTC	P2122	Throttle/Pedal Position Sensor/Switch ”D” Circuit Low Input

DTC	P2123	Throttle/Pedal Position Sensor/Switch ”D” Circuit High Input

DTC	P2125	Throttle/Pedal Position Sensor/Switch ”E” Circuit

DTC	P2127	Throttle/Pedal Position Sensor/Switch ”E” Circuit Low Input

DTC	P2128	Throttle/Pedal Position Sensor/Switch ”E” Circuit High Input

DTC	P2138	Throttle/Pedal Position Sensor/Switch ”D”/”E” Voltage Correlation

CIRCUIT DESCRIPTION

HINT:

- ▲ This is repair procedure of ”accelerator pedal position sensor”.
- ▲ This electrical throttle system is no used throttle cable.
- ▲ This accelerator pedal position sensor is non–contact type.

The throttle position sensor is mounted in the accelerator pedal to detect the opening angle of the accelerator pedal. Since this sensors is electronically controlled with hall elements, accurate control and reliability can be obtained. It have the 2 sensors to detect the accelerator position and a malfunction of the accelerator position sensor.

In the accelerator pedal position sensor, the voltage applied to pedal terminals VPA and VPA2 of the ECM changes between 0 V and 5 V, in proportion to the opening angle of the accelerator pedal. The VPA is a signal to indicate the actual accelerator pedal opening angle which is used for the engine control, and the VPA2 is a signal to indicate the information about the opening angle which is used for detecting a malfunction.

The ECM judges the current opening angle of the accelerator pedal from these signals input from terminals VPA and VPA2 and, the ECM controls the throttle motor based on these signals. If this DTCs is stored, the throttle valve is locked at a certain opening angle. Also, the whole electronically controlled throttle operation is cancelled until the system returns to normal and the ignition switch is turned OFF. However, the maximum opening angle of the accelerator pedal is limited to 22˚ when either of the VPA or VPA2 circuit is normal.

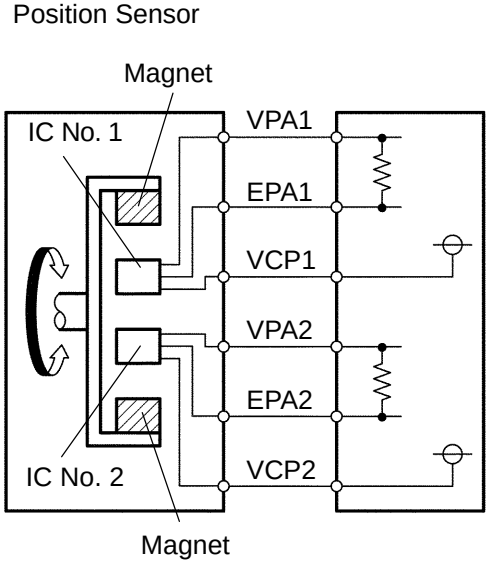

A19694

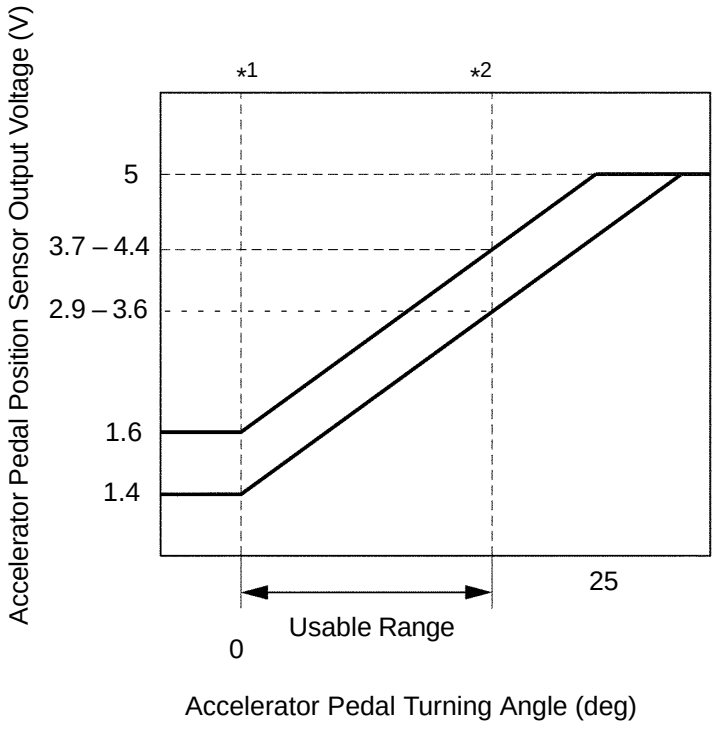

*1 : Accelerator Pedal Fully Released

*2 : Accelerator Pedal Fully Depressed

A19803

DTC No.	DTC Detection Condition (Open or short in accelerator pedal position sensor circuit)	Main trouble Area
P2122	Condition (a) and (b) continues for 0.5 sec. or more: (a) VPA1 < 0.2 V (b) VPA2 > 0.97 deg	▲Accelerator pedal position sensor ▲VCPA circuit open ▲VPA1 circuit open or ground short ▲ECM
P2123	Condition (a) continues for 2.0 sec. or more: (a) VPA1 > 4.8 V	▲Accelerator pedal position sensor ▲EPA1 circuit open ▲ECM
P2120	Condition (a) continues for 0.5 sec. or more: (a) VPA1 < 0.2 V and VPA2 > 0.97 deg, or VPA1 > 4.8 V	▲Accelerator pedal position sensor ▲ECM
P2127	Condition (a) and (b) continues for 0.5 sec. or more: (a) VPA2 < 0.5 V (b) VPA1 > 0.97 deg	▲Accelerator pedal position sensor ▲VCP2 circuit open ▲VPA2 circuit open or ground short ▲ECM
P2128	Condition (a) and (b) continues for 2.0 sec. or more: (a) VPA2 > 4.8 V (a) 0.2 V < VPA1 < 3.45 V	▲Accelerator pedal position sensor ▲EPA1 circuit open ▲ECM
P2125	Condition (a) continues for 0.5 sec. or more: (a) VPA2 < 0.5 V and VPA1 > 0.97 deg, or VPA2 > 4.8 V and 0.2 V < VPA1 < 3.45 V	▲Accelerator pedal position sensor ▲ECM
P2138	Condition (a) or (b) continues for 2.0 sec. or more: (a) |VPA1 – VPA2| < 0.02 V (b) VPA1 < 0.2 V and VPA2 < 0.5 V	▲VPA1 and VPA2 circuit are short circuited ▲Accelerator pedal position sensor ▲ECM

HINT:

After confirming DTC P2120, P2122, P2123, P2125, P2127, P2128 and P2138 use the OBD II scan tool or the hand–held tester to confirm the accelerator pedal opening percentage.

Trouble area	Accelerator pedal position expressed as voltage			
	Accelerator pedal completely released		Accelerator pedal fully depressed	
	ACCEL POS #1	ACCEL POS #2	ACCEL POS #1	ACCEL POS #2
VC circuit open	0 – 0.2 V	0 – 0.2 V	0 – 0.2 V	0 – 0.2 V
VPA1 circuit open or ground short	0 – 0.2 V	1.2 – 2.0 V	0 – 0.2 V	3.4 – 5.3 V
VPA2 circuit open or ground short	0.5 – 1.1 V	0 –0.2 V	2.6 – 4.5 V	0 – 0.2 V
E2 circuit open	4.5 – 5.5 V	4.5 – 5.5 V	4.5 – 5.5 V	4.5 – 5.5 V

WIRING DIAGRAM

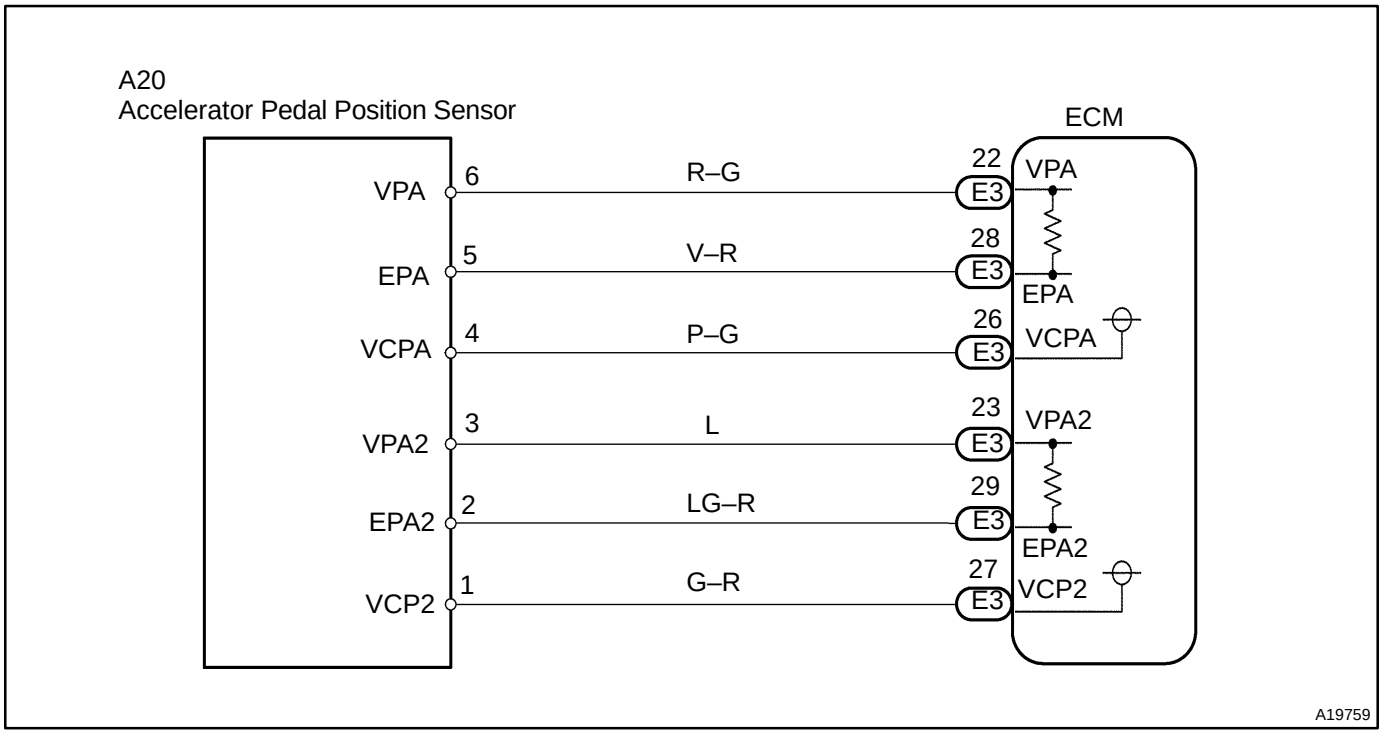

INSPECTION PROCEDURE

HINT:

Read freeze frame data using hand–held tester or OBD II scan tool, as freeze frame data records the engine conditions when a malfunction is detected. When troubleshooting, it is useful for determining whether the vehicle was running or stopped, the engine was warmed up or not, the air–fuel ratio was lean or rich, etc. at the time of the malfunction.

Hand–held tester:

1	**Connect hand–held tester, and read the voltage for accelerator pedal position sensor data.**

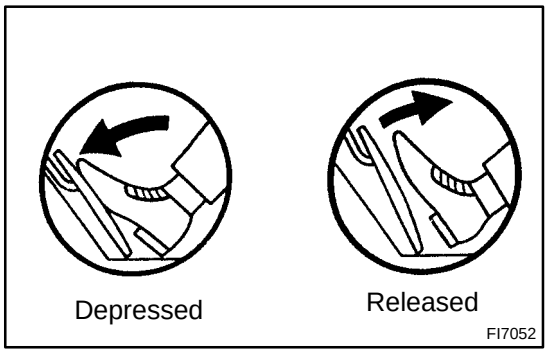

PREPARATION:

(a) Connect the hand–held tester to the DLC3.

(b) Turn the ignition switch ON and push the hand–held tester main switch ON.

CHECK:

Read the voltage for the accelerator pedal position sensor data.

OK:

Accelerator pedal	VPA1	VPA2
Released	0.5 – 1.1 V	1.2 – 2.0 V
Depressed	2.6 – 4.5 V	3.4 – 5.3 V

OK	**Go to step 5.**

NG

2	**Check for open and short in harness and connector in VCPA, VCP2, VPA, VPA2 EPA and EPA2 circuit between ECM and accelerator pedal position sensor (See page IN–27)**

NG → **Repair or replace harness and connector.**

OK

3	**Check voltage between terminals VCPA and EPA, and VCP2 and EPA2 of ECM terminals.**

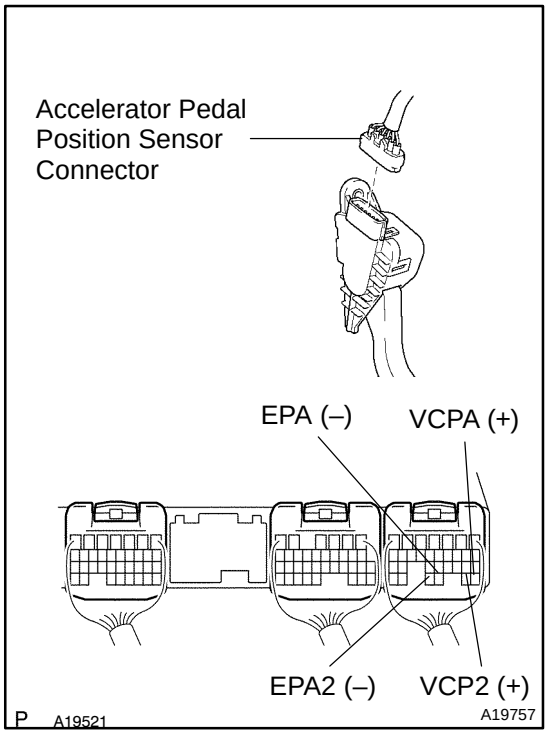

CHECK:

(a) Remove the glove compartment (See page SF–54).
(b) Turn the ignition switch ON.
(c) Disconnect the accelerator pedal position sensor connector.

CHECK:

Measure the voltage between terminals VCPA and EPA, and VCP2 and EPA2 of the ECM connector.

OK:

Voltage: 4.5 – 5.5 V

NG → **Check and replace ECM (See page IN–27).**

OK

4	**Replace accelerator pedal assembly (See page SF–52).**

GO

5	**Check if DTC output recur ?**

PREPARATION:

(a) Connect the hand–held tester to the DLC3.
(b) Disconnect the battery terminals or remove the EFI fuses and ETCS fuses (Clear DTCs).
(c) Start the engine.
(d) Drive the engine at idle for 15 sec. or more.

CHECK:

Read the DTC output.

OK:

No DTC output.

OK → **System is OK.**

NG

Check and replace ECM (See page IN–27).

OBD II scan tool (excluding hand–held tester):

1	**Check for open and short in harness and connector in VCPA, VCP2, VPA, VPA2 EPA and EPA2 circuit between ECM and accelerator pedal position sensor (See page IN–27)**

NG → **Repair or replace harness and connector.**

OK

2	**Check voltage between terminals VCPA and EPA, and VCP2 and EPA2 of ECM terminals.**

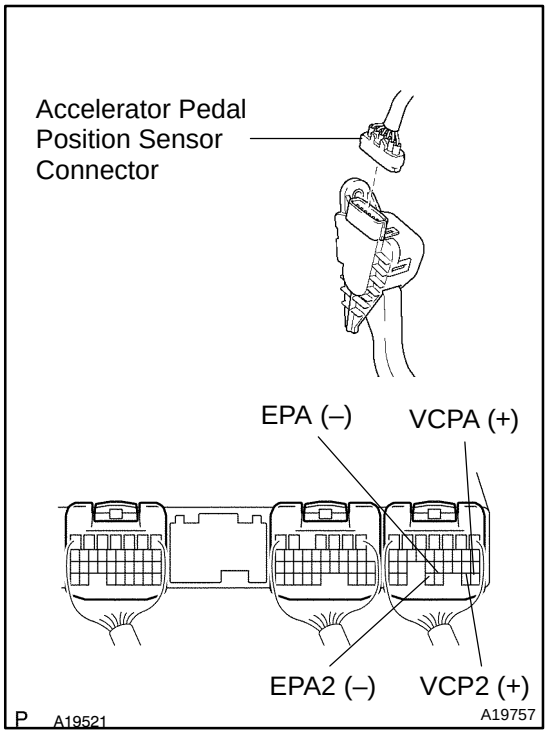

CHECK:

(a) Remove the glove compartment (See page SF–54).

(b) Turn the ignition switch ON.

(c) Disconnect the accelerator pedal position sensor connector.

CHECK:

Measure the voltage between terminals VCPA and EPA, and VCP2 and EPA2 of the ECM connector.

OK:

Voltage: 4.5 – 5.5 V

NG → **Check and replace ECM (See page IN–27).**

OK

3	**Replace accelerator pedal position sensor (See page SF–52).**

GO

4	**Check if DTC output recur ?**

PREPARATION:

(a) Connect the hand–held tester to the DLC3.
(b) Disconnect the battery terminals or remove the EFI fuse and ETCS fuses (Clear DTCs).
(c) Start the engine.
(d) Drive the engine at idle for 15 sec. or more.

CHECK:

Read the DTC output.

OK:

No DTC output.

OK → **System is OK.**

NG

Check and replace ECM (See page IN–27).

DTC	P2121	Throttle/Pedal Position Sensor/Switch ”D” Circuit Range/Performance

CIRCUIT DESCRIPTION

Refer to DTC P2120 on page DI–361.

DTC No.	DTC Detection Condition	Trouble Area
P2121	Condition (a) continues for 0.5 seconds: (a) Difference between VPA and VPA2 exceeds the threshold	▲Accelerator pedal position sensor

INSPECTION PROCEDURE

HINT:

Read freeze frame data using hand–held tester or OBD II scan tool, as freeze frame data records the engine conditions when a malfunction is detected. When troubleshooting, it is useful for determining whether the vehicle was running or stopped, the engine was warmed up or not, the air–fuel ratio was lean or rich, etc. at the time of the malfunction.

Replace accelerator pedal assembly (See page SF–52).

DI3CR–09

ECM Power Source Circuit

CIRCUIT DESCRIPTION

When the ignition switch is turned ON, battery positive voltage is applied to terminal IGSW of the ECM and the EFI main relay (Marking: EFI) control circuit in the ECM sends a signal to terminal MREL of the ECM switching on the EFI main relay.

This signal causes current to flow to the coil, closing the contacts of the EFI main relay and supplying power to terminals +B of the ECM.

If the ignition switch is turned OFF, the ECM continues to switch on the EFI main relay for a maximum of 2 seconds for the initial setting of the throttle valve.

WIRING DIAGRAM

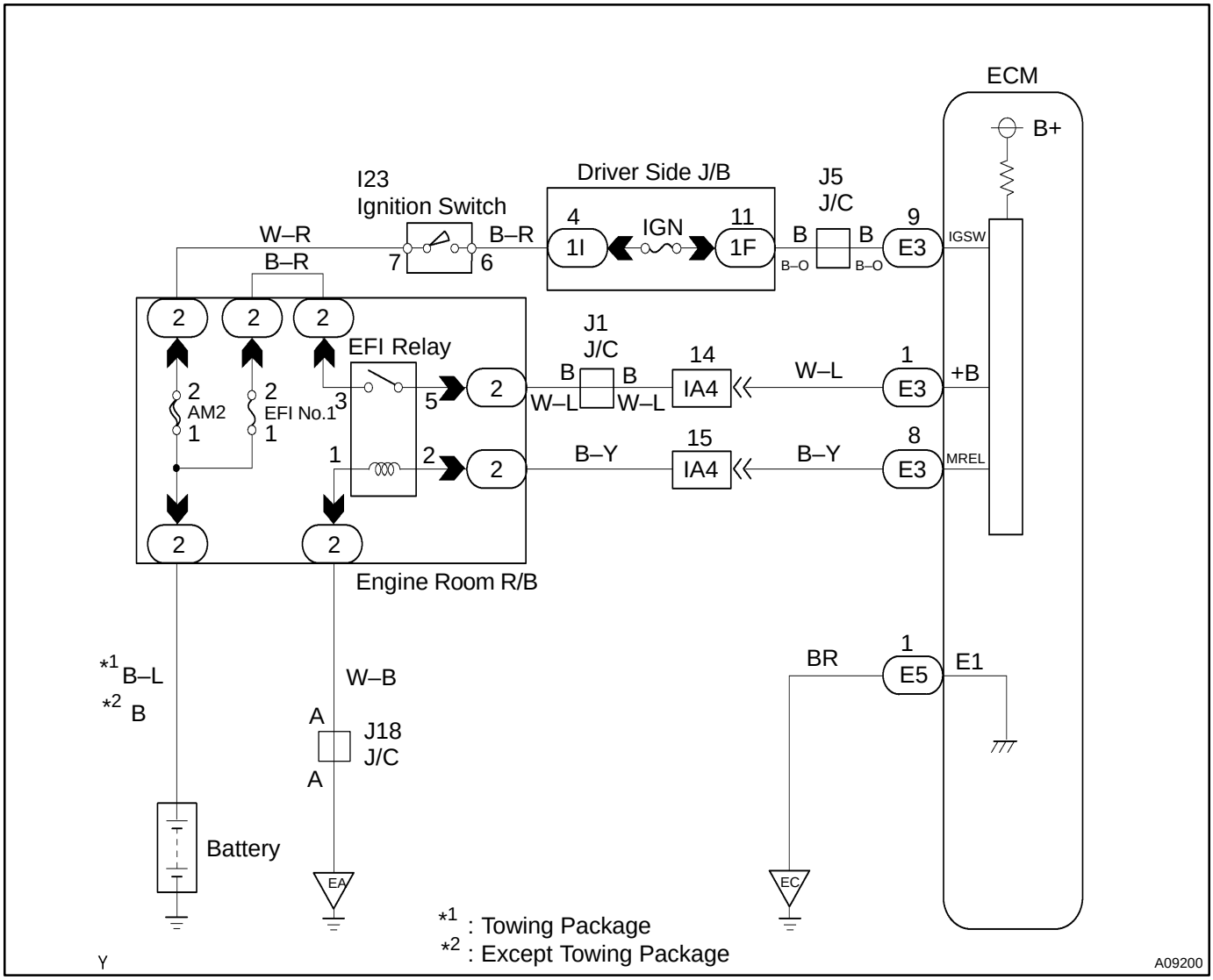

INSPECTION PROCEDURE

1	**Check voltage between terminals +B and E1 of ECM connectors.**

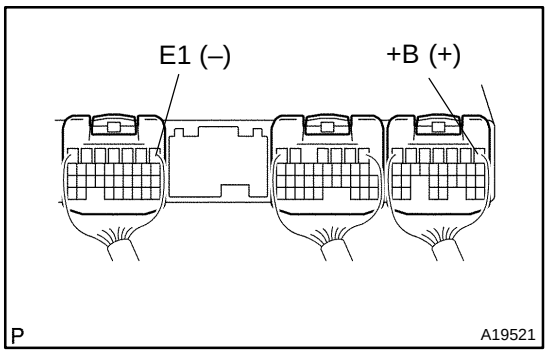

PREPARATION:

(a) Remove the glove compartment (See page SF–55).

(b) Turn the ignition switch ON.

CHECK:

Measure the voltage between terminals +B and E1 of the ECM connectors.

OK:

Voltage: 9 – 14 V

OK	**Proceed to next circuit inspection shown on Problem symptoms table (See page DI–216).**

NG

2	**Check for open in harness and connector between terminal E1 of ECM and body ground (See page IN–27).**

NG	**Repair or replace harness or connector.**

OK

3	**Check voltage between terminal IGSW of ECM connector and body ground.**

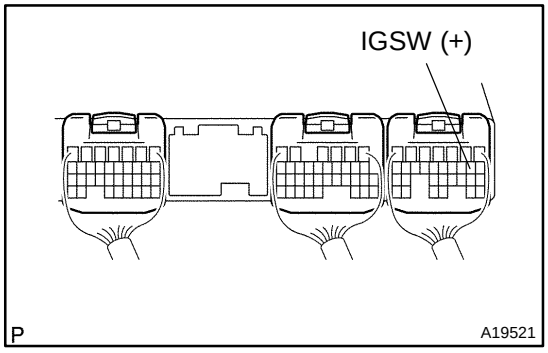

PREPARATION:

(a) Remove the glove compartment (See page SF–55).

(b) Turn the ignition switch ON.

CHECK:

Measure the voltage between terminal IGSW of the ECM and the body ground.

OK:

Voltage: 9 – 14 V

OK	**Go to step 6.**

NG

4	Check IGN fuse.

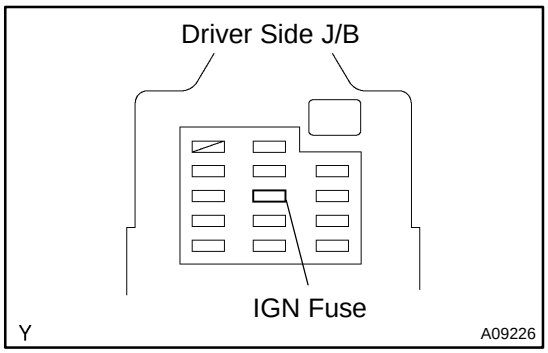

PREPARATION:
Remove the IGN fuse from the driver side J/B.
CHECK:
Check the continuity of the IGN fuse.
OK:
Continuity

NG → **Check for short in all harness and components connected to IGN fuse.**

OK ↓

5	Check ignition switch (See page BE–15).

NG → **Replace ignition switch.**

OK ↓

Check and repair harness and connector between battery and ignition switch, and ignition switch and ECM.

6	Check voltage between terminal MREL of ECM connector and body ground.

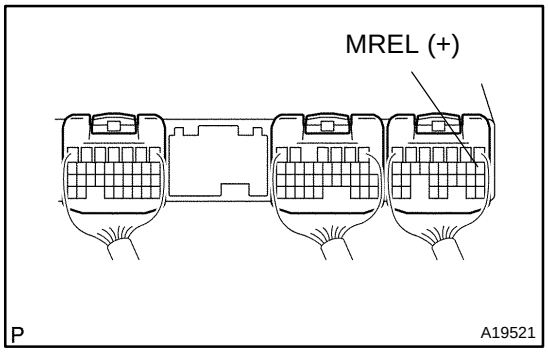

PREPARATION:
(a) Remove the glove compartment (See page SF–55).
(b) Turn the ignition switch ON.
CHECK:
Measure the voltage between terminal MREL of the ECM connector and the body ground.
OK:
Voltage: 9 – 14 V

NG → **Check and replace ECM (See page IN–27).**

OK ↓

7	Check EFI No.1 fuse (See page DI–344).

NG → Check for short in all harness and components connected to EFI No.1 fuse.

OK ↓

8	Check EFI main relay (Marking: EFI) (See page SF–33).

NG → Replace EFI main relay.

OK ↓

9	Check for open and short in harness and connector between terminal MREL of ECM and body ground (See page IN–27).

NG → Repair and replace harness or connector.

OK ↓

Check and repair harness or connector between EFI No.1 fuse and battery.

DIA8R–01

Cranking Holding Function Circuit

CIRCUIT DESCRIPTION

The system is detects the IG switch's starting signal and supply current to starter until judge engine perfect explosion is judged. The purpose is to reduce the holding time of the ignition key.

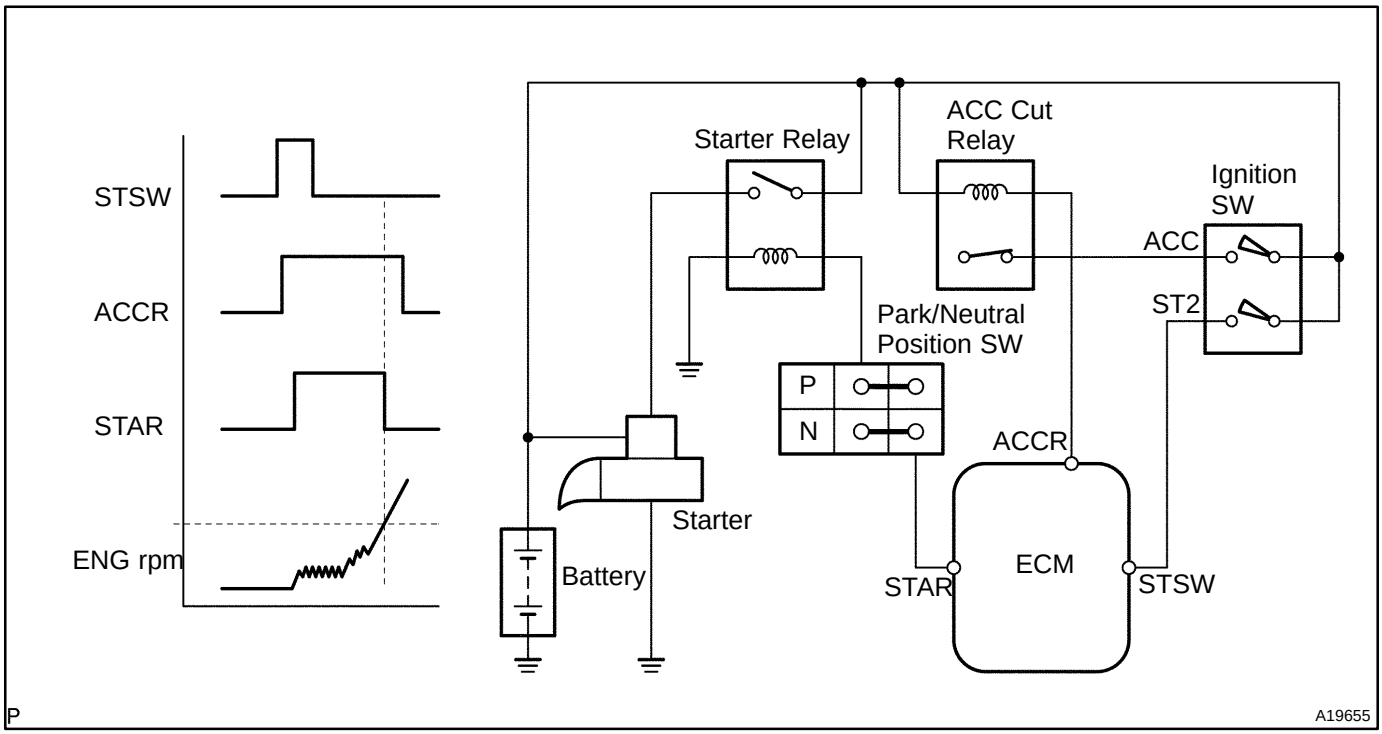

WIRING DIAGRAM

Refer to DTC P0617 on page DI–348.

INSPECTION PROCEDURE

Hand–held tester:

1	**Check operation of engine cranking.**

CHECK:

When turning the ignition switch to the ST position, check whether the starter motor starts.

OK → **Check for intermittent problems (See page DI–194)**

NG

2	**Connect hand–held tester, and check STA signal.**

PREPARATION:

(a) Connect the hand–held tester to the DLC3.

(b) Turn the ignition switch ON, and push the hand–held tester main switch ON.

CHECK:

Read the STA signal on the hand–held tester while the starter operates.

OK:

Ignition Switch Position	ON	START
STA Signal	OFF	ON

NG → **Go to step 7.**

OK

3	**Check voltage between terminal STAR of ECM connector and body ground.**

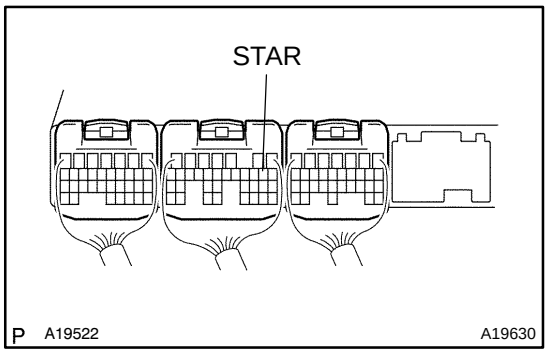

PREPARATION:

(a) Remove the glove compartment (See page SF–54).

(b) Turn the ignition switch ON.

CHECK:

Measure the voltage between terminal STAR of the ECM connector and the body ground, while cranking the engine (ignition switch START position) and while not engine cranking the engine (ignition switch position ON).

OK:

Voltage: 9 – 14 V

NG → **Check and replace ECM (See page IN–27).**

OK

4	**Check park/neutral position switch.**

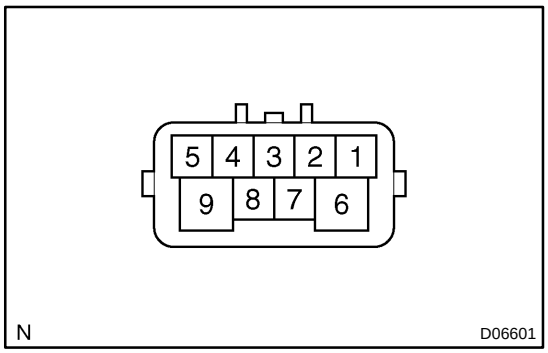

PREPARATION:

Remove the park/neutral position switch connector.

CHECK:

Check continuity between each terminal shown below when the shift lever is moved to each range.

Shift range	Terminal No. to continuity	
P	1 – 3	6 – 9
R	2 – 3	–
N	3 – 5	6 – 9
D	3 – 7	–
2	3 – 4	–
L	3 – 8	–

OK:

There is continuity.

NG → **Replace the park/neutral position switch.**

OK

5	**Check starter relay (Marking: ST) (See page ST–20).**

NG → **Replace starter relay.**

OK

6	**Check for open and short in harness and connector between ECM and park/neutral position switch, park/neutral position switch and starter relay, starter relay and body ground (See page IN–27).**

NG → **Repair or replace harness or connector.**

OK

Check for intermittent problems (See page DI–194).

7	Check STA fuse.

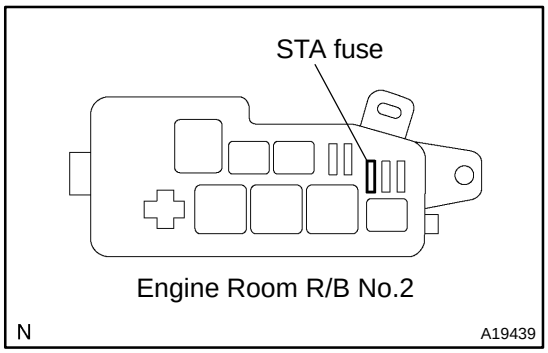

PREPARATION:
Remove the STA fuse from the engine room R/B No.2.
CHECK:
Check continuity of STA fuse.
OK:

Continuity

NG	Check for short in all the harness and components connected to STA fuse (See attached wiring diagram.).

OK

8	Check ignition switch.

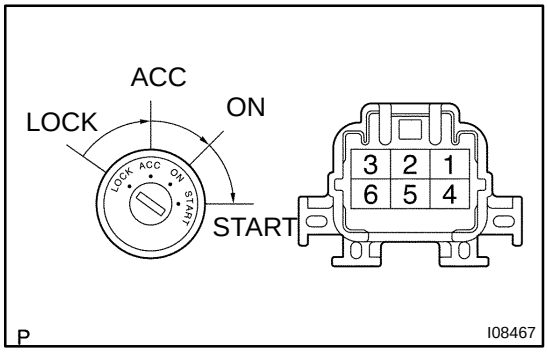

PREPARATION:
(a) Remove the lower finish panel.
(b) Disconnect the ignition switch connector.
CHECK:
Check continuity between terminals shown below.
OK:

Switch Position	Terminal No. to continuity	
LOCK	–	–
ACC	1 – 3	–
ON	1 – 2 – 3	5 – 6
START	1 – 2	4 – 5 – 6

NG	Replace ignition switch.

OK

9	**Check for open in harness and connector between terminal STSW of ECM connector and STA fuse, ignition switch and STA fuse (See page IN–27).**

NG → **Repair or replace harness or connector.**

OK

Check for intermittent problems (See page DI–194).

OBD II scan tool (excluding hand–held tester):

1	**Check operation of engine cranking.**

CHECK:

When turning the ignition switch to the ST position, check whether the starter motor starts.

OK → **Check for intermittent problems (See page DI–194)**

NG

2	**Check voltage between terminal STSW of ECM connector and body ground.**

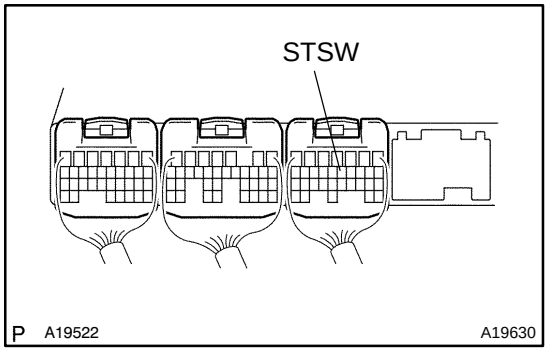

PREPARATION:

(a) Remove the glove compartment door (See page SF–54).

(b) Turn the ignition switch ON.

CHECK:

Measure the voltage between terminal STA of the ECM connector and the body ground, while cranking the engine (ignition switch START position) and while not engine cranking the engine (ignition switch position ON).

OK:

Voltage: 6 V or more

NG → **Go to step 8.**

OK

3	Check voltage between terminal STAR of ECM connector and body ground.

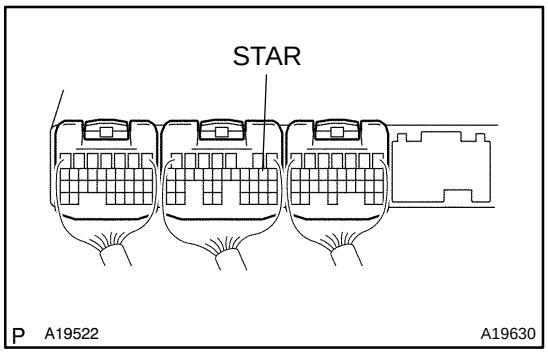

PREPARATION:

(a) Remove the glove compartment (See page SF–54).

(b) Turn the ignition switch ON.

CHECK:

Measure the voltage between terminal STAR of the ECM connector and the body ground, while cranking the engine (ignition switch START position) and while not engine cranking the engine (ignition switch position ON).

OK:

Voltage: 9 – 14 V

NG	Check and replace ECM (See page IN–27).

OK

4	Check park/neutral position switch.

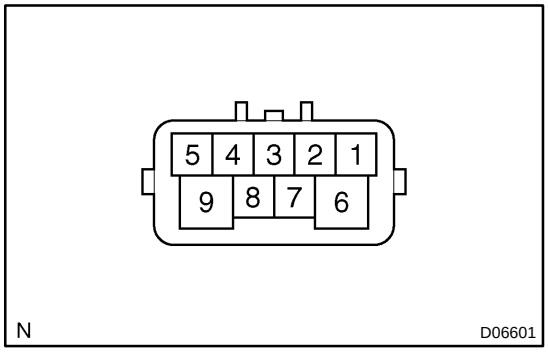

PREPARATION:

Remove the park/neutral position switch connector.

CHECK:

Check continuity between each terminal shown below when the shift lever is moved to each range.

Shift range	Terminal No. to continuity	
P	1 – 3	6 – 9
R	2 – 3	–
N	3 – 5	6 – 9
D	3 – 7	–
2	3 – 4	–
L	3 – 8	–

OK:

There is continuity.

NG	Replace the park/neutral position switch.

OK

5	Check starter relay (Marking: ST) (See page ST–20).

NG → Replace starter relay.

OK

6	Check for open and short in harness and connector between ECM and park/neutral position switch, park/neutral position switch and starter relay, starter relay and body ground (See page IN–27).

NG → Repair or replace harness or connector.

OK

Check for intermittent problems (See page DI–194).

7	Check STA fuse.

PREPARATION:

Remove the STA fuse from the driver side J/B.

CHECK:

Check continuity of STA fuse.

OK:

Continuity

NG → Check for short in all the harness and components connected to STA fuse (See attached wiring diagram.).

OK

8	Check ignition switch.

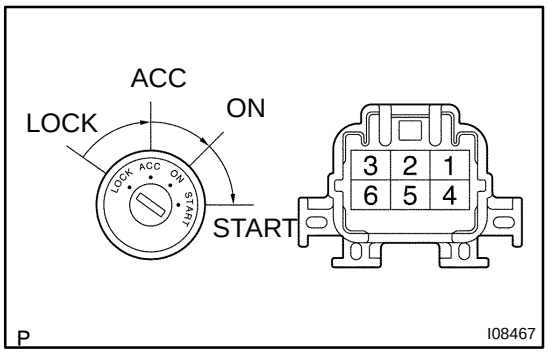

PREPARATION:

(a) Remove the lower finish panel.

(b) Disconnect the ignition switch connector.

CHECK:

Check continuity between terminals shown below.

OK:

Switch Position	Terminal No. to continuity	
LOCK	–	–
ACC	1 – 3	–
ON	1 – 2 – 3	5 – 6
START	1 – 2	4 – 5 – 6

NG → **Replace ignition switch.**

OK

9	Check for open in harness and connector between terminal STSW of ECM connector and STA fuse, ignition switch and STA fuse (See page IN–27).

NG → **Repair or replace harness or connector.**

OK

Check for intermittent problems (See page DI–194).

AUTOMATIC TRANSMISSION (A340E, A340F)

DI0SL–33

HOW TO PROCEED WITH TROUBLESHOOTING

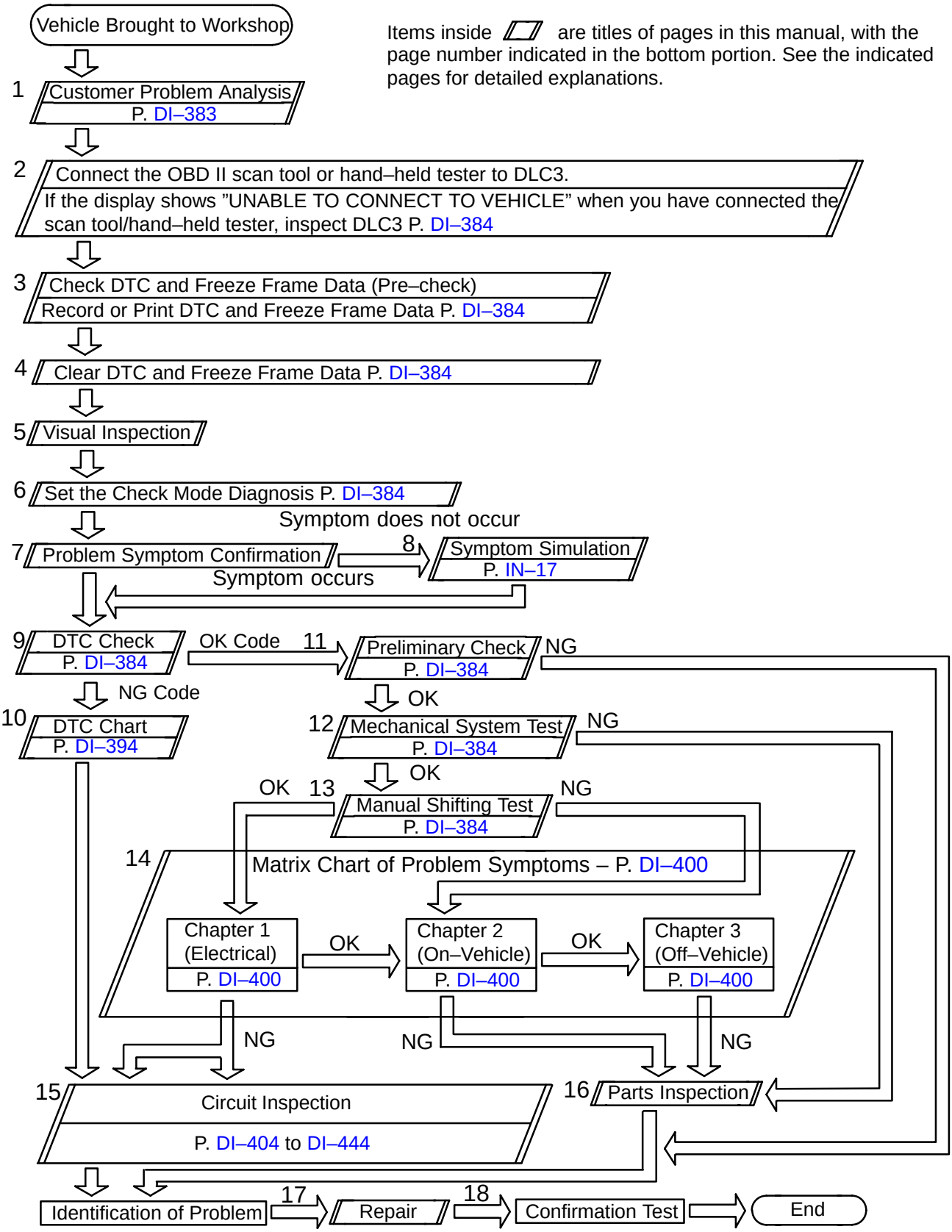

DI0SM–24

CUSTOMER PROBLEM ANALYSIS CHECK

Transmission Control System Check Sheet

Inspector's Name :

Customer's Name		Registration No.	
		Registration Year	/ /
		Frame No.	
Date Vehicle Brought In	/ /	Odometer Reading	km mile

Date Problem Occurred	/ /
How Often Does Problem Occur?	◀ Continuously ◀ Intermittently (times a day)

Symptoms	◀ Vehicle does not move (◀ Any position ◀ Particular position)
	◀ No up–shift (◀ 1st → 2nd ◀ 2nd → 3rd ◀ 3rd → O/D)
	◀ No down–shift (◀ O/D → 3rd ◀ 3rd → 2nd ◀ 2nd → 1st)
	◀ Lock–up malfunction
	◀ Shift point too high or too low
	◀ Harsh engagement (◀ N → D ◀ Lock–up ◀ Any drive position)
	◀ Slip or shudder
	◀ No kick–down
	◀ Others ( )

Check Item	Malfunction Indicator Lamp	◀ Normal ◀ Remains ON

DTC Check	1st Time	◀ Normal code	◀ Malfunction code (Code)
	2nd Time	◀ Normal code	◀ Malfunction code (Code)

DI65Z–04

PRE–CHECK

1. DIAGNOSIS SYSTEM

(a) Description

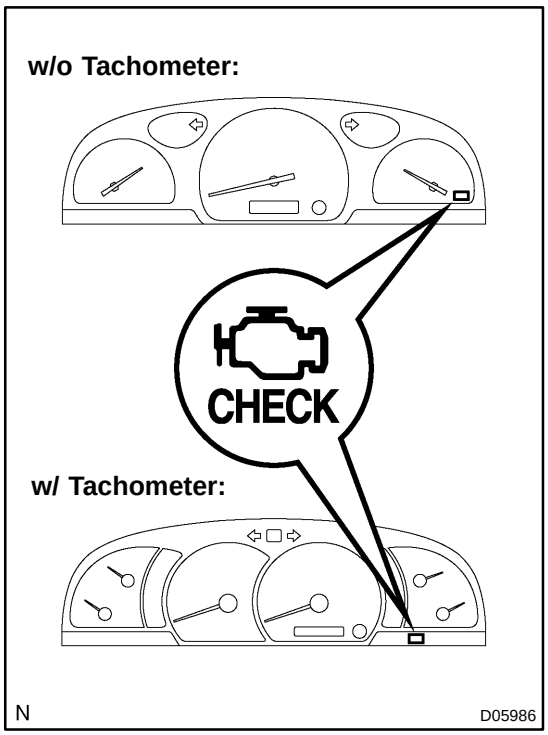

▲ When troubleshooting the OBD II vehicles, the only difference from the usual troubleshooting procedure is that you connect the OBD II scan tool complying with SAE J1987 or the hand–held tester to the vehicle, and read off the various data output from the vehicle's ECM.

The OBD II regulations require that the vehicle's on–board computer should light up the Malfunction Indicator Lamp (MIL) on the instrument panel when the computer detects a malfunction in the computer itself or in the drive system components which affect the vehicle emissions. In addition to the MIL lighting up when a malfunction is detected, the applicable DTCs prescribed by the SAE J2012 are recorded in the ECM memory.

If the malfunction only occurs in 3 trips, the MIL goes off but the DTCs remain recorded in the ECM memory.

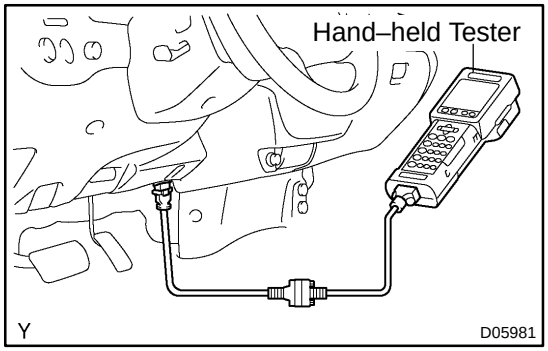

▲ To check the DTCs, connect the scan tool (OBD II scan tool or hand–held tester) to the DLC3 on the vehicle. The scan tool also enables you to erase the DTCs and check the freeze frame data and various forms of engine data (For further information, refer to the instruction book).

The DTCs include the SAE controlled codes and the Manufacturer controlled codes.

The SAE controlled codes must be set as the codes prescribed by the SAE, while the Manufacturer controlled codes can be set freely by a manufacturer within the prescribed limits (See the DTC chart on page DI–394).

▲ The diagnosis system operates in the normal mode during the normal vehicle use, and also has the check mode for technicians to simulate malfunction symptoms and perform the troubleshooting. Most DTCs use the 2–trip detection logic* to prevent erroneous detection. By switching the ECM to the check mode when troubleshooting, the technician can

cause the MIL to light up for the malfunction that is only detected once or momentarily (hand–held tester only).

*: When a logic malfunction is first detected, the malfunction is temporarily stored in the ECM memory. If the same malfunction is detected again during the 2nd test drive, this 2nd detection causes the MIL to light up.

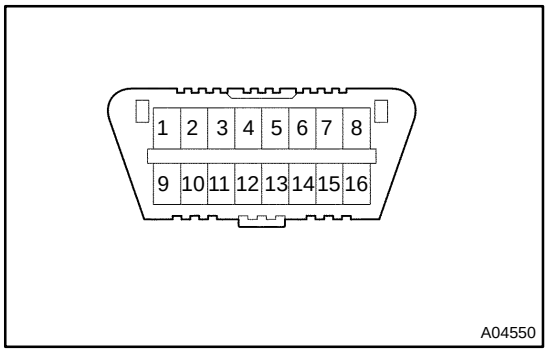

(b) Inspect the DLC3.

The vehicle's ECM uses the V.P.W. (Variable Pulse Width) for communication to comply with the SAE J1850. The terminal arrangement of the DLC3 complies with the SAE J1962 and matches the V.P.W. format.

Terminal No.	Condition	Specified condition
2 (Bus < Line) ↔ 5 (Signal Ground)	During communication	Pulse generation
4 (Chassis Ground) ↔ Body ground	Always	1 Ω or less
5 (Signal Ground) ↔ Body ground	Always	1 Ω or less
16 (B+) ↔ Body ground	Always	1 Ω or less
		9 – 14 V

HINT:

If the display shows "UNABLE TO CONNECT TO VEHICLE" when you have connected the cable of the scan tool (OBD II scan tool or hand–held tester) to the DLC3, turned the ignition switch ON and operated the scan tool, there is a problem on the vehicle side or the scan tool side.

- If the communication is normal when the scan tool is connected to another vehicle, inspect the DLC3 on the original vehicle.
- If the communication is still impossible when the scan tool is connected to another vehicle, the problem is probably in the scan tool itself, so consult the Service Department listed in the scan tool's instruction manual.

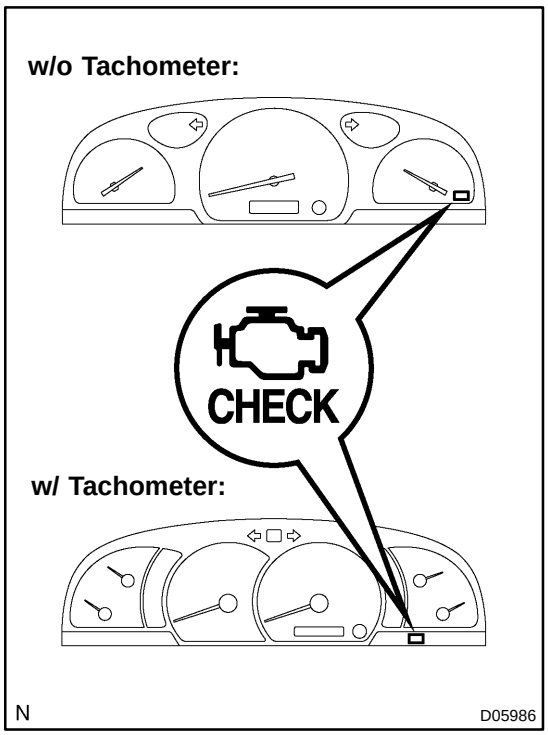

2. INSPECT DIAGNOSIS (NORMAL MODE)

(a) Check the MIL.

(1) The MIL comes on when the ignition switch is turned ON and the engine is not running.

HINT:

If the MIL does not light up, troubleshoot the combination meter (See page BE–52).

(2) When the engine is started, the MIL should go off. If the lamp remains on, the diagnosis system has detected a malfunction or an abnormality in the system.

(b) Check the DTC.

NOTICE:

Hand–held tester only: When the diagnosis system is switched from the normal mode to the check mode, all the DTCs and freeze frame data recorded in the normal mode will be erased. So before switching modes, always check the DTCs and freeze frame data, and make a note.

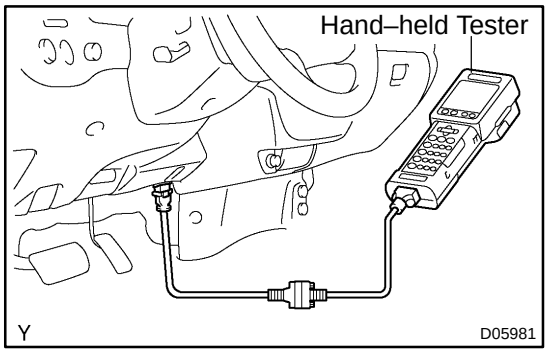

(1) Connect the scan tool (OBD II scan tool or hand–held tester) to the DLC3.

(2) Turn the ignition switch ON and turn the scan tool switch ON.

(3) Use the scan tool to check the DTCs and freeze frame data and make a note (For operating instructions, see the scan tool's instruction book).

(4) See page DI–394 to confirm the details of the DTCs.

NOTICE:

When simulating symptoms with the OBD II scan tool (excluding hand–held tester) to check the DTCs, use the normal mode. For codes on the DTCs chart subject to the "2 trip detection logic", turn the ignition switch off after the symptoms have been simulated the 1st time. Then use the simulation process again.

3. INSPECT DIAGNOSIS (CHECK MODE)

HINT:

Hand–held tester only: Compared to the normal mode, the check mode has high sensibility to detect malfunctions. Furthermore, the same diagnostic items which are detected in the normal mode can also be detected in the check mode.

(a) Check the DTC.

(1) Check the initial conditions.

- Battery positive voltage 11 V or more.
- Throttle valve fully closed.
- Transmission in P position.
- Air conditioning switched off.

(2) Turn the ignition switch OFF.

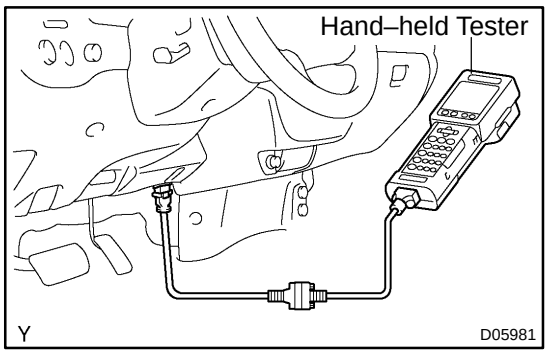

(3) Connect the hand–held tester to the DLC3.
(4) Turn the ignition switch ON and the hand–held tester ON.

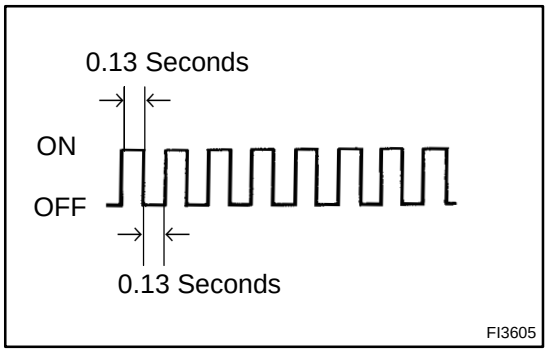

(5) Switch the hand–held tester from the normal mode to the check mode (Check that the MIL flashes).
(6) Start the engine (the MIL goes off after the engine starts).
(7) Simulate the conditions of the malfunction described by the customer.

NOTICE:
Leave the ignition switch ON until you have checked the DTCs, etc.

(8) After simulating the malfunction conditions, use the hand–held tester diagnosis selector to check the DTCs and freeze frame data, etc.

HINT:
Take care not to turn the ignition switch OFF, because it switches the diagnosis system from the check mode to the normal mode and erases all the DTCs, etc..

(9) After checking the DTC, inspect the applicable circuit.

(b) Clear the DTC.
Operate the scan tool (OBD II scan tool or hand–held tester) to erase the DTC and freeze frame data (See the scan tool's instruction book for the operating instructions.).

4. ROAD TEST

NOTICE:
Conduct the test at the normal operating temperature of the ATF: 50 – 80˚C (122 – 176˚F).

(a) D position test:
Shift into the D position and fully depress the accelerator pedal to check the following points.
(1) Check the up–shift operation.
Check if 1 → 2, 2 → 3 and 3 → O/D up–shifts take place and if the shift points conform to the automatic shift schedule (See page SS–46).

HINT:
▲ O/D Gear Up–shift Prohibition Control (1. Coolant temperature is 60˚C (140˚F) or less. 2. There is a 10 km/h (6 mph) difference between the set speed of the cruise control and the actual vehicle speed.)
▲ O/D Gear Lock–up Prohibition Control (1. Brake pedal is depressed. 2. Coolant temperature is 60 ˚C (140 ˚F) or less.)

(2) Check for abnormal shock and slip at the up–shifts.
(3) Check for abnormal noises and vibration.
Drive in the D position lock–up and the O/D gear to check for abnormal noises and vibration.

HINT:
The cause of abnormal noises and vibration must be checked very thoroughly, because they could also cause loss of balance in the differential or torque converter clutch, etc.

(4) Check the kick–down operation.
While driving in the D position, 2nd, 3rd and O/D gears, check if the 2 → 1, 3 → 2, and O/D → 3 kick–downs take place and if the shift points conform to the automatic shift schedule (See page SS–46).

(5) Check for abnormal shock and slip at the kick–downs.

(6) Check the lock–up mechanism.

▲ Drive in the D position, O/D gear, at a steady speed (lock–up ON) of about 70 km/h (43 mph).

▲ Lightly depress the accelerator pedal and check that the engine speed does not change abruptly.

If there is a big jump in the engine speed, there is no lock–up.

(b) 2 position test:
Shift into the 2 position and fully depress the accelerator pedal to check the following points.

(1) Check the up–shift operation.
Check if the 1 → 2 up–shift takes place and if the shift point conforms to the automatic shift schedule (See page SS–46).

HINT:
There is no O/D up–shift and lock–up in the 2 position.

(2) Check the engine braking.
While driving in the 2 position and 2nd gear, release the accelerator pedal and check the engine braking effect.

(3) Check for abnormal noises during acceleration and deceleration, and for abnormal shock at the up–shift and the down–shift.

(c) L position test:
Shift into the L position and fully depress the accelerator pedal to check the following points.

(1) Check that there is no up–shift.
While driving in the L position, check that there is no up–shift to the 2nd gear.

(2) Check the engine braking.
While driving in the L position, release the accelerator pedal and check the engine braking effect.

(3) Check for abnormal noises during acceleration and deceleration.

(d) R position test:
Shift into the R position and fully depress the accelerator pedal and check for slipping.

CAUTION:
Before conducting this test, ensure that the test area is free from people and obstruction.

(e) P position test:
Stop the vehicle on a grade (more than 5°), shift into the P position, and release the parking brake. Then, check if the parking lock pawl holds the vehicle in place.

5. BASIC INSPECTION

(a) Check the ATF level.

HINT:

▲ Drive the vehicle until the engine and transmission become the normal operating temperature.
ATF temperature: 70 – 80˚C (158 – 176˚F)

▲ Only use the COOL range on the dipstick as a rough reference when the ATF is replaced or the engine does not run.

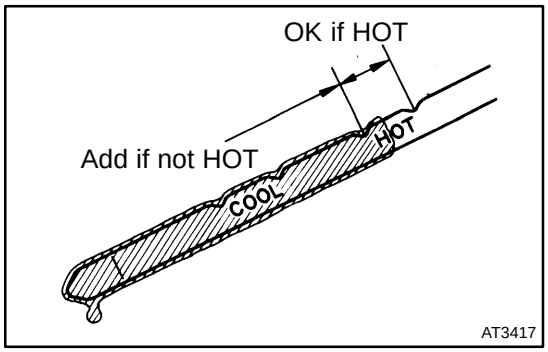

(1) Park the vehicle on a level surface and set the parking brake.
(2) With the engine idling and the brake pedal depressed, shift the shift lever into all positions from P to L and put it back to the P position.
(3) Pull out the dipstick and wipe it clean.
(4) Push it back fully into the pipe.
(5) Pull it out and check that the fluid level is in the HOT range.

If the level is not within the range, add new ATF.

ATF: T–IV

NOTICE:

Do not overfill.

(b) Check the ATF condition.

If the ATF smells burnt or the color is black, replace it.

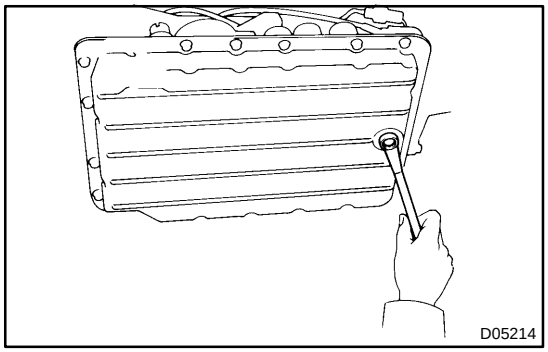

(c) Replace the ATF.
(1) Remove the drain plug and drain the ATF.
(2) Reinstall the drain plug securely.

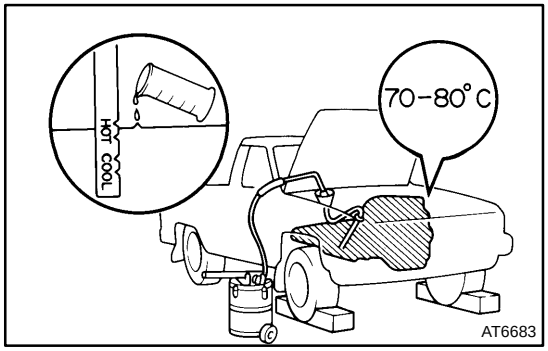

(3) With the engine OFF, add new ATF through the oil filler pipe.

ATF: T–IV

Capacity: 2.2 liters (2.3 US qts, 2.0 Imp. qts)

(4) Start the engine and shift the shift lever into all positions from P to L, and then put it back to the P position.

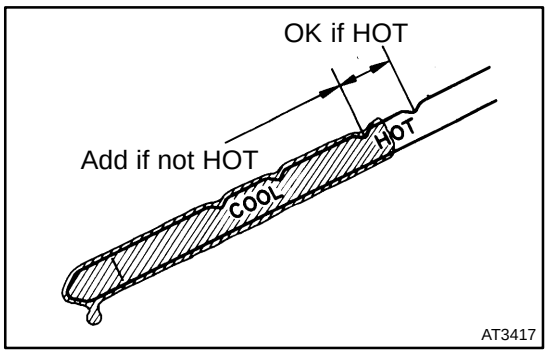

(5) With the engine idling, check the fluid level. Add fluid up to the COOL level on the dipstick.
(6) Check the fluid level at the normal operating temperature, 70 – 80˚C (158 – 176˚F), and add as necessary.

NOTICE:
Do not overfill.

(d) Check the fluid leaks.

If there are leaks, it is necessary to repair or replace the O–rings, the FIPGs, the oil seals, the plugs or the other parts.

(e) Inspect and adjust the shift lever position.
When shifting the shift lever from the N position to the other positions, check that the lever can be shifted smoothly and accurately to each position and that the position indicator correctly indicates the position.

If the indicator is not aligned with the correct position, carry out the following adjustment procedures.

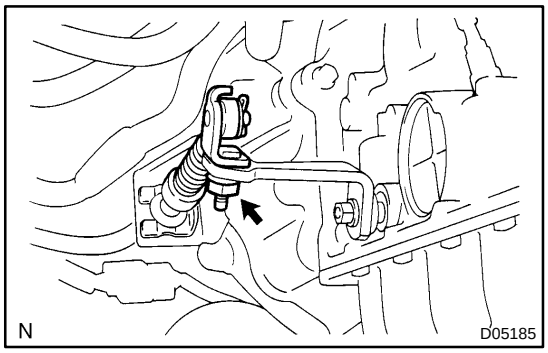

(1) Loosen the nut on the control shaft lever.
(2) Push the control shaft fully rearward.
(3) Return the control shaft lever by 2 notches.
(4) Set the shift lever to the N position.
(5) While holding the shift lever lightly toward the R position, adjust the control lever nut.
(6) Tighten the control shaft lever nut.
Torque: 12.5 N·m (130 kgf·cm, 9 ft·lbf)

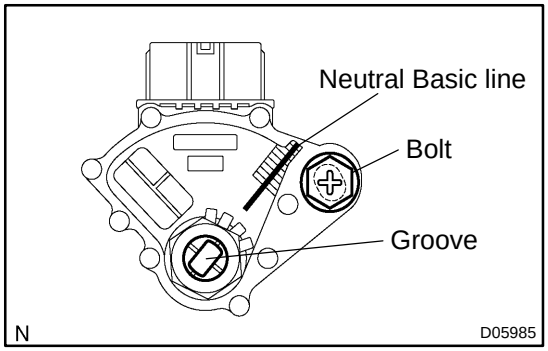

(f) Inspect and adjust the park/neutral position.

If the engine does not start at the P and N positions, carry out the following adjustment procedure.

(1) Loosen the park/neutral position switch bolt and set the shift lever to the N position.
(2) Align the groove with the neutral basic line.
(3) Tighten the bolt at the position.
Torque: 13 N·m (130 kgf·cm, 10 ft·lbf)

For further inspection of the park/neutral position switch (See page DI–408).

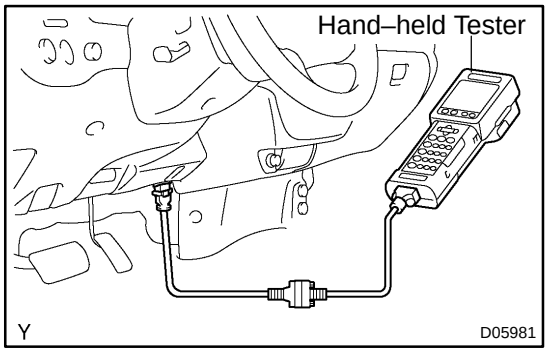

(g) Check the idle speed.
Connect the OBD II scan tool or the hand–held tester to the DLC3 and inspect the idle speed.
Idle speed: 700 ± 50 rpm (In the N position and air conditioner OFF)

6. MECHANICAL SYSTEM TESTS

(a) Check the stall speed.

The object of this test is to check the overall performance of the transmission and engine by measuring the stall speed in the D and R positions.

NOTICE:

- **Conduct the test at the normal operating temperature of the ATF: 50 – 80˚C (122 – 176˚F).**
- **Do not run this test continuously for more than 5 seconds.**
- **To ensure safety, conduct this test in a wide, clear and level area which provides good traction.**
- **The test should always be carried out in pairs. One technician should observe the conditions of the wheels or the wheel stoppers outside the vehicle while the other is conducting the test.**

(1) Chock the 4 wheels.

(2) Connect the scan tool (OBD ll scan tool or hand–held tester) to the DLC3.

(3) Fully apply the parking brake.

(4) Keep your left foot depressing firmly the brake pedal.

(5) Start the engine.

(6) Shift into the D position. Depress all the way down the accelerator pedal with your right foot. Quickly read the stall speed at this time.

Stall speed: 2,250 ± 150 rpm

(7) Conduct the same test in the R position.

Stall speed: 2,250 ± 150 rpm

Evaluation:

Problem	Possible cause
(a) Stall speed is low in D and R positions	▲Engine output insufficient ▲Stator one–way clutch not operating properly HINT: If the value is more than 600 rpm or below the specified value, the torque converter clutch could be faulty.
(b) Stall speed is high in D position	▲Line pressure too low ▲Forward clutch slipping ▲No. 2 one–way clutch not operating properly ▲O/D one–way clutch not operating properly
(c) Stall speed is high in R position	▲Line pressure too low ▲Direct clutch slipping ▲1st & reverse brake slipping ▲O/D one–way clutch not operating properly
(d) Stall speed is high in D and R positions	▲Line pressure too low ▲ATF level improper ▲O/D one–way clutch not operating properly

(b) Measure the time lag.
When the shift lever is shifted while the engine is idling, there will be a certain lapse of time or time lag before the shock can be felt. This is used for checking the condition of the O/D direct clutch, the forward clutch, and the 1st and reverse brake.

NOTICE:

- **Conduct the test at the normal operating temperature of the ATF: 50 – 80˚C (122 – 176˚F).**
- **Be sure to allow 1 minute interval between the tests.**
- **Perform measurement 3 times and take the average value.**

(1) Fully apply the parking brake.
(2) Start the engine and check the idle speed.
Idle speed: 700 ± 50 rpm (in the N position and the air conditioner OFF)
(3) Shift the shift lever from the N to D position. Using a stop watch, measure the time from the lever is shifted until the shock is felt.
Time lag at N → D: Less than 1.2 seconds
(4) In the same manner, measure the time lag at N → R.
Time lag at N → R: Less than 1.5 seconds

Evaluation (if the N → D or N → R is longer than the specified):

Problem	Possible cause
Time lag at N → D is longer	▲Line pressure too low ▲Forward clutch worn ▲O/D one–way clutch not operating properly
Time lag at N → R is longer	▲Line pressure too low ▲Direct clutch worn ▲1st & reverse brake worn ▲O/D one–way clutch not operating properly

7. HYDRAULIC TEST

Measure the line pressure.

NOTICE:

- **Conduct the test at the normal operating temperature of the ATF: 50 – 80˚C (122 – 176˚F).**
- **The line pressure test should always be carried out in pairs. One technician should observe the conditions of the wheels or the wheel stoppers outside the vehicle while the other is conducting the test.**
- **Be careful to prevent the SST's hose from interfering with the exhaust pipe.**

(1) Warm up the ATF.
(2) Remove the test plug on front left side of the transmission case front left side and connect the SST (See pages AT–33 and AT–26 for the location to connect SST).
SST 09992–00095 (09992–00151, 09992–00271)
(3) Fully apply the parking brake and chock the 4 wheels.
(4) Start the engine and check the idle speed.
(5) Keep your left foot depressing firmly the brake pedal and shift the shift lever into the D position.
(6) Measure the line pressure while the engine is idling.
(7) Depress the accelerator pedal all the way down. Quickly read the highest line pressure when the engine speed reaches the specified stall speed (in the mechanical system tests).
(8) In the same manner, conduct the test in the R position.
Specified line pressure (5VZ–FE):

Condition	D position kPa (kgf/cm^2, psi)	R position kPa (kgf/cm^2, psi)
Idling	380 – 440 (3.9 – 4.5, 51 – 64)	600 – 695 (6.1 – 7.1, 87 – 101)
Stall	1,090 – 1,225 (11.1 – 12.5, 158 – 178)	1,460 – 1,795 (14.9 – 18.3, 212 – 260)

Specified line pressure (2UZ–FE):

Condition	D position kPa (kgf/cm^2, psi)	R position kPa (kgf/cm^2, psi)
Idling	480 – 540 (4.9 – 5.5, 70 – 78)	695 – 795 (7.1 – 8.1, 101 – 115)
Stall	1,360 – 1,500 (13.9 – 15.3, 197 – 218)	1,735 – 2,070 (17.7 – 21.1, 252 – 300)

If the measured pressures are not up to the specified values, recheck the throttle cable adjustment and retest.

Evaluation

Problem	Possible cause
If the measured values at all positions are higher than the specified value	▲Shift solenoid valve SLT ▲Throttle valve defective ▲Regulator valve defective
If the measured values at all positions are lower than the specified value	▲Shift solenoid valve SLT ▲Throttle valve defective ▲Regulator valve defective ▲Oil pump defective ▲O/D direct clutch defective
If pressure is lower in the D position only	▲D position circuit fluid leakage ▲Forward clutch defective
If pressure is lower in the R position only	▲R position circuit fluid leakage ▲Direct clutch defective ▲1st and reverse brake defective

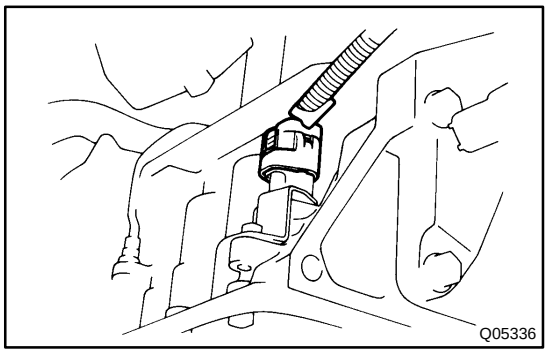

8. MANUAL SHIFTING TEST

HINT:

By this test, it can be determined if the trouble is within the electrical circuit or if there is a mechanical problem in the transmission.

(a) Disconnect the solenoid wire.

(b) Inspect the manual driving operation.
Check that the shift and gear positions correspond to the table below.

Shift Position	Gear Position
D	O/D
2	3rd
L	1st
R	Reverse
P	Pawl Lock

HINT:

If the L, 2 and D positions and the gear positions are difficult to be distinguished, conduct the manual shifting test. While driving, shift the shift lever through the L, 2 and D positions. Check that the changed gear corresponds to the shift position.

If any abnormality is found during the manual shifting test, the problem is in the transmission itself.

(c) Connect the solenoid wire.

(d) Clear the DTC.

DI0SO–22

DIAGNOSTIC TROUBLE CODE CHART

If a DTC is displayed during the DTC check, check the circuit listed for that code in the table below and proceed to the page given.

DTC No. (See Page)	Detection Item	Trouble Condition	MIL *1	Memory
P0500 (DI–404)	Vehicle Speed Sensor ”A”	◀Open or short in No. 1 vehicle speed sensor circuit ◀No. 1 vehicle speed sensor ◀Combination meter ◀ECM	▲	
P0705 (DI–408)	Transmission Range Sensor Circuit Malfunction (PRNDL Input)	◀Short in park/neutral position switch circuit ◀Park/neutral position switch ◀ECM	▲	
P0710 (DI–412)	Transmission Fluid Temperature Sensor ”A” Circuit	◀Open or short in ATF temperature sensor circuit ◀ATF temperature sensor ◀ECM	▲	
P0712 (DI–412)	Transmission Fluid Temperature Sensor ”A” Circuit Low Input		▲	
P0713 (DI–412)	Transmission Fluid Temperature Sensor ”A” Circuit High Input		▲	
P0717 *2 (DI–415)	Input Speed Sensor Circuit No Signal	◀Open or short in O/D direct clutch speed sensor circuit ◀O/D direct clutch speed sensor ◀ECM	▲	
P0722 (DI–418)	Output Speed Sensor	◀Open or short in No. 2 vehicle speed sensor circuit ◀No. 2 vehicle speed sensor ◀ECM	▲	
P0724 (DI–421)	Brake Switch ”B” Circuit High	◀Short in stop light switch circuit ◀Stop light switch ◀ECM	▲	
P0741 (DI–424)	Torque Converter Clutch Solenoid Performance (Shift Solenoid Valve SL)	◀Shift solenoid valve SL is stuck open or closed ◀Valve body is blocked up or stuck ◀Lock–up clutch	▲	
P0743 (DI–426)	Torque Converter Clutch Circuit Electrical	◀Open or short in shift solenoid valve SL circuit ◀Shift solenoid valve SL ◀ECM	▲	
P0751 (DI–428)	Shift Solenoid ”A” Performance (Sfiht Solenoid Valve S1)	◀Shift solenoid valve No. 1 is stuck open or closed ◀Valve body is blocked up or stuck ◀Open or short in shift solenoid valve No.1 circuit ◀Shift solenoid valve No. 1 ◀ECM	▲	
P0756 (DI–428)	Shift Solenoid ”B” Performance (Sfiht Solenoid Valve S2)	◀Shift solenoid valve No. 2 is stuck open or closed ◀Valve body is blocked up or stuck ◀Open or short in shift solenoid valve No. 2 circuit ◀Shift solenoid valve No. 2 ◀ECM	▲	
P0818 *3 (DI–430)	Driveline Disconnect Switch Input Circuit	◀Short in transfer neutral position switch circuit ◀Transfer neutral position switch ◀ECM	▲	
P0850 *3,4 (DI–408)	Park/Neutral Switch Input Circuit	◀Short in park/neutral position switch circuit ◀Park/neutral position switch ◀ECM	▲	

DTC No. (See Page)	Detection Item	Trouble Condition	MIL *1	Memory
P0973 (DI–432)	Shift Solenoid ”A” Control Circuit Low	◀Open or short in shift solenoid valve No. 1 circuit ◀Shift solenoid valve No. 1 ◀ECM	▲	
P0974 (DI–432)	Shift Solenoid ”A” Control Circuit High		▲	
P0976 (DI–432)	Shift Solenoid ”B” Control Circuit Low	◀Open or short in shift solenoid valve No. 2 circuit ◀Shift solenoid valve No. 2 ◀ECM	▲	
P0977 (DI–432)	Shift Solenoid ”B” Control Circuit High		▲	
P1782 *4 (DI–435)	T/F L4 Range Position Switch Performance	◀Short in transfer L4 position switch circuit ◀Transfer L4 position switch ◀ECM	▲	
P2716 (DI–437)	Pressure Contorl Solenoid ”D” Electrical	◀Open or short in shift solenoid valve SLT circuit ◀Shift solenoid valve SLT ◀ECM	▲	

*1 : ▲...MIL light up
*2 : 2UZ–FE only
*3 : 5VZ–FE only
*4 : 4WD only

DI0SP–10

PARTS LOCATION

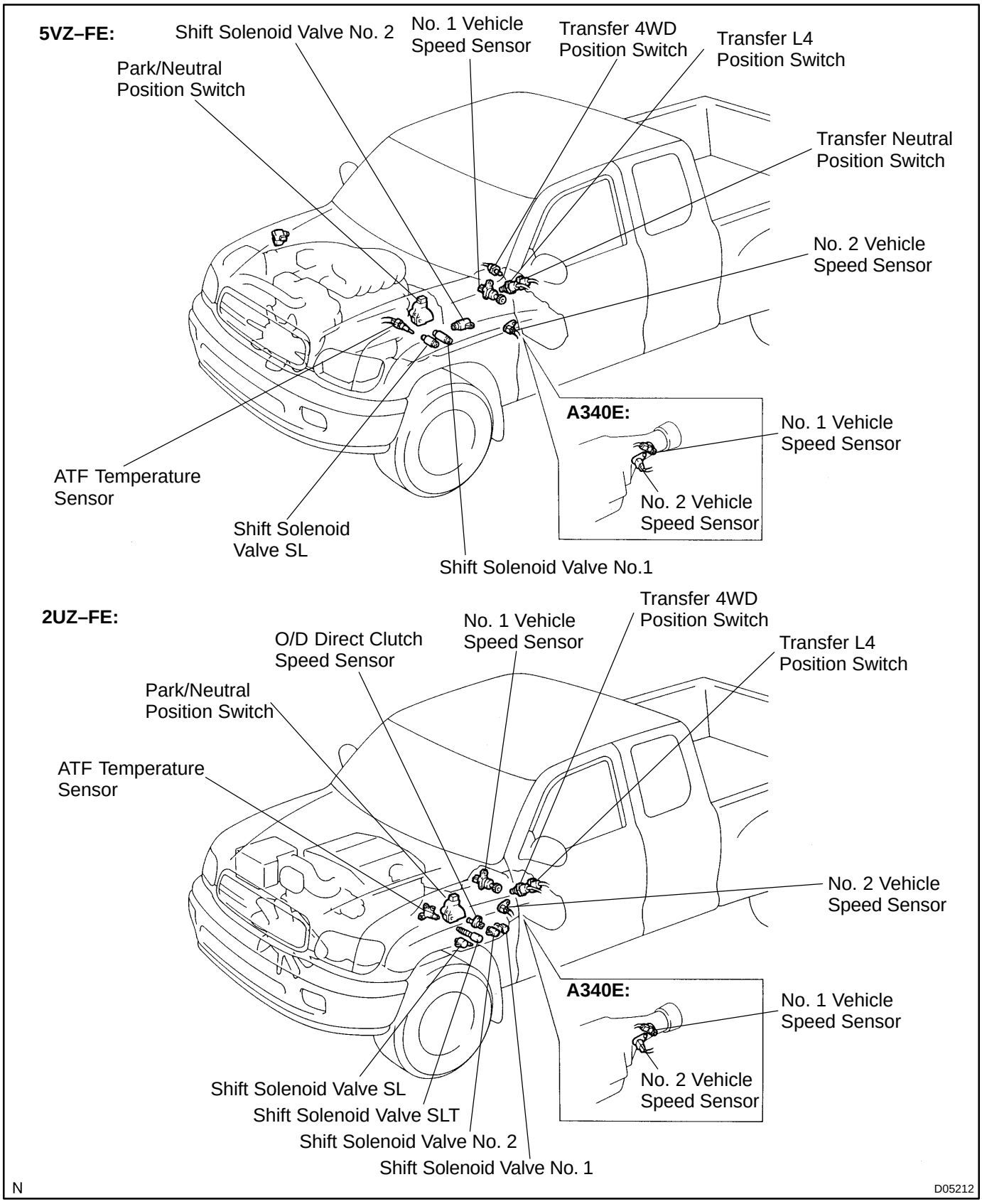

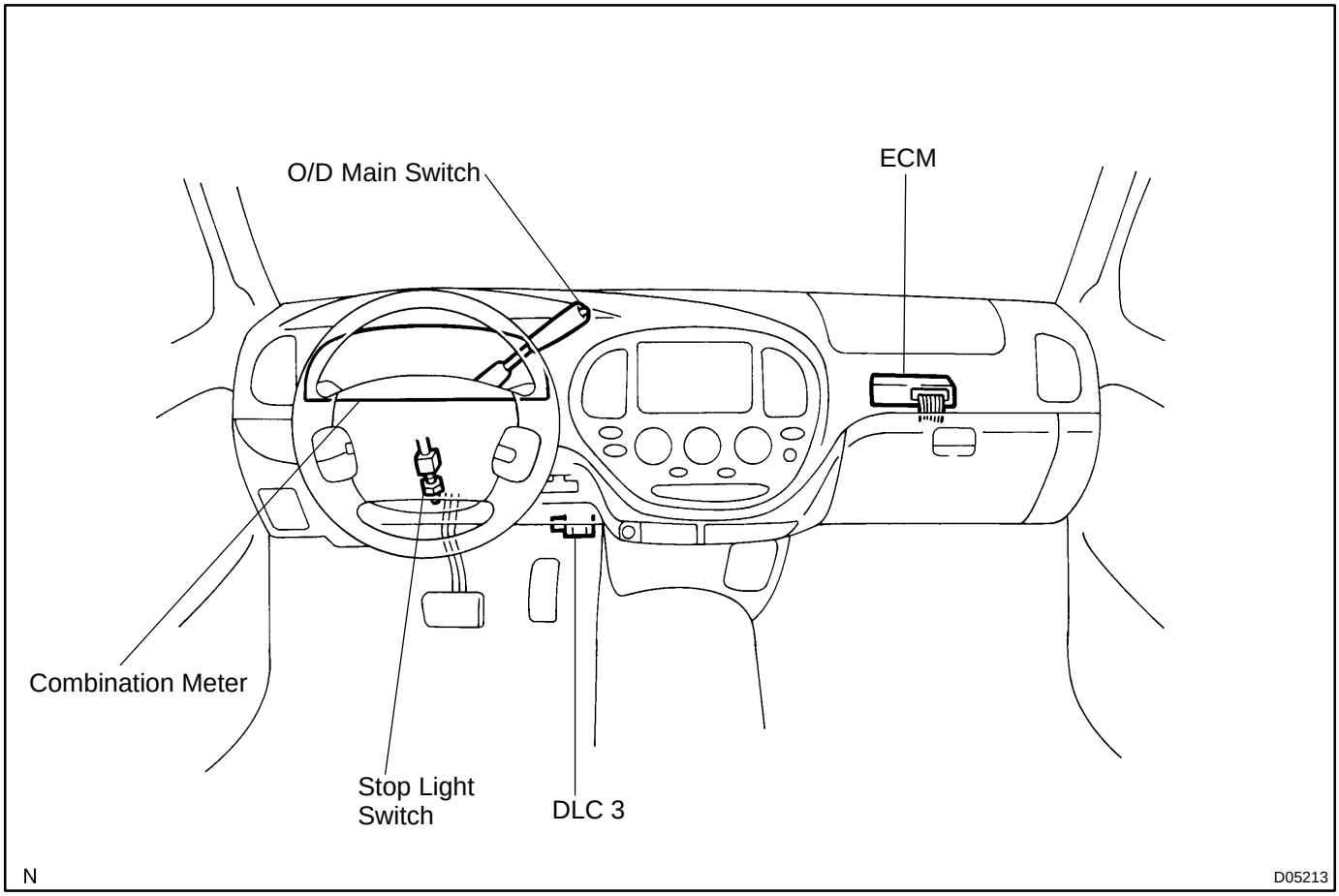
O/D Main Switch
ECM
Combination Meter
Stop Light Switch
DLC 3
N
D05213

DI8CP–03

TERMINALS OF ECM

5VZ–FE:

ECM Terminals

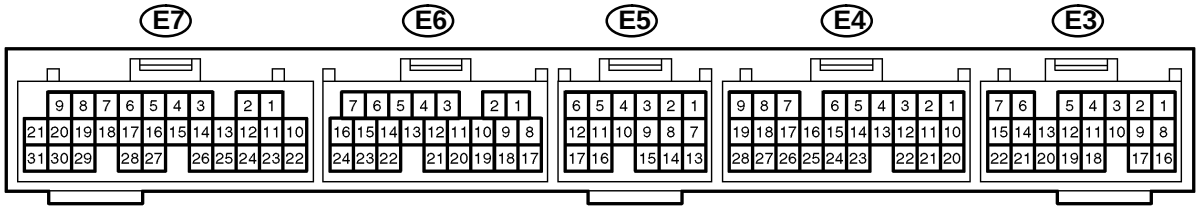

N

D10501

Symbols (Terminals No.)	Wiring Color	Condition	STD Voltage (V)
S1 (E7–3) ↔ E1 (E6–17)	R ↔ BR	IG switch ON	9 – 14
		1st or 2nd gear	9 – 14
		3rd or O/D gear	Below 1.5
S2 (E7–2) ↔ E1 (E6–17)	W–L ↔ BR	IG switch ON	Below 1.5
		2nd or 3rd gear	9 – 14
		1st or O/D gear	Below 1.5
SL (E7–1) ↔ E1 (E6–17)	G–R ↔ BR	IG switch ON	Below 1.5
		Vehicle driving under lock–up condition	9 – 14
SLT+ (E5–5) ↔ SLT– (E5–11)	B–R ↔ G–W	IG switch ON	Below 3
		Engine is idling	Pulse signal output Below 1.5 ↔ 10 – 12
SP1 (E3–6) ↔ E1 (E6–17)	G–O ↔ BR	IG switch ON and driving wheel rotating slowly	Pulse generation
$SP2^{+}$ (E6–23) ↔ $SP2^{-}$ (E6–22)	Y–R ↔ W–R	Engine is running	Below 1.5 and 4 – 6 *1
ODLP (E4–20) ↔ E1 (E6–17)	L–O ↔ BR	IG switch ON	9 – 14
ODMS (E4 – 14) ↔ E1 (E6–17)	R ↔ BR	O/D main switch ON	Below 3
		O/D main switch OFF	9 – 14
THOC (E7–19) ↔ E2 (E7–11)	R–Y ↔ B–W	ATF temperature: 115˚C (239˚F) or more	Below 1.5
OILW (E4–21) ↔ E1 (E6–17)	Y–R ↔ BR	ATF temperature: 115˚C (239˚F) or more	Below 1.5
L (E4–4) ↔ E1 (E6–17)	LG ↔ BR	IG switch ON and Shift lever at L position	7.5 – 14
		IG switch ON and Shift lever at any position except L position	Below 1.5
2 (E4 – 5) ↔ E1 (E6–17)	L ↔ BR	IG switch ON and Shift lever at 2 position	7.5 – 14
		IG switch ON and Shift lever at any position except 2 position	Below 1.5
D (E4–25) ↔ E1 (E6–17)	W–R ↔ BR	IG switch ON and Shift lever at D position	7.5 – 14
		IG switch ON and Shift lever at any position except D position	Below 1.5
R (E4 – 6) ↔ E1 (E6 – 17)	R–B ↔ BR	IG switch ON and Shift lever at R position	7.5 – 14
		IG switch ON and Shift lever at any position except R position	Below 1.5
NSW (E4 – 3) ↔ E1 (E6 – 17)	P ↔ BR	IG switch ON and Shift lever at P or N position	Below 3
		IG switch ON and Shift lever at any position except P and N position	9 – 14
TFN (E4 – 11) ↔ E1 (E6 – 17) *2	R–Y ↔ BR	IG switch ON and Transfer lever at N position	Below 1.5
		IG switch ON and Transfer lever at any position except N position	9 – 14

Symbols (Terminals No.)	Wiring Color	Condition	STD Voltage (V)
L4 (E4–2) ↔ E1 (E6 – 17) *2	L–R ↔ BR	IG switch ON and Transfer lever at L4 position	Below 1.5
		IG switch ON and Transfer lever at H2 or H4 position	9 – 14

2UZ–FE:

ECM Terminals

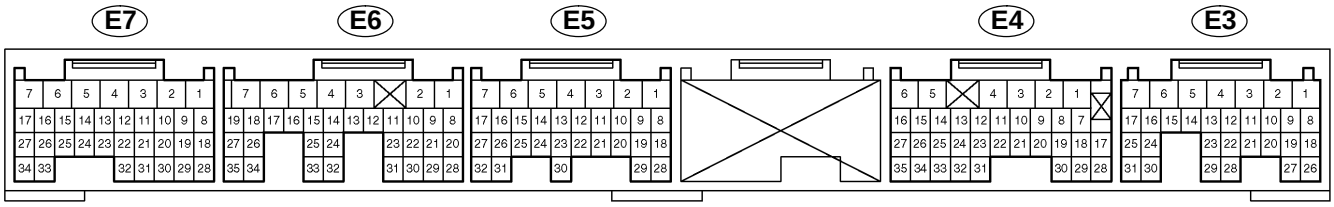

Symbols (Terminals No.)	Wiring Color	Condition	STD Voltage (V)
S1 (E6–11) ↔ E1 (E5–1)	P–L ↔ BR	IG switch ON	9 – 14
		1st or 2nd gear	9 – 14
		3rd or O/D gear	Below 1.5
S2 (E6–10) ↔ E1 (E5–1)	W–L ↔ BR	IG switch ON	Below 1.5
		2nd or 3rd gear	9 – 14
		1st or O/D gear	Below 1.5
SL (E6–15) ↔ E1 (E5–1)	G–R ↔ BR	IG switch ON	Below 1.5
		Vehicle driving under lock–up condition	9 – 14
SLT+ (E6–13) ↔ SLT– (E6–12)	B–R ↔ G–W	IG switch ON	Below 3
		Engine is idling	Below 1.5 and 4 – 6 *1
SP2+ (E6–26) ↔ SP2– (E6–34)	Y–R ↔ W–R	Engine is running	Below 1.5 and 4 – 6 *1
NCO+ (E6–27) ↔ NCO– (E6–35)	P ↔ L	Engine is idling	Below 1.5 and 4 – 6 *1
ODMS (E3–16) ↔ E1 (E5–1)	R ↔ BR	O/D main switch ON (O/D OFF)	Below 3
		O/D main switch OFF (O/D ON)	9 – 14
ODLP (E4–7) ↔ E1 (E5–1)	L–O ↔ BR	IG switch ON	9 – 14
OILW (E4–25) ↔ E2 (E7–28)	Y–R ↔ B–W	ATF temperature: 115˚C (239˚F) or more	Below 1.5
L (E4–8) ↔ E1 (E5–1)	LG ↔ BR	IG switch ON and Shift lever at L position	7.5 – 14
		IG switch ON and Shift lever at any position except L position	Below 1.5
2 (E4–9) ↔ E1 (E5–1)	L ↔ BR	IG switch ON and Shift lever at 2 position	7.5 – 14
		IG switch ON and Shift lever at any position except 2 position	Below 1.5
D (E4–10) ↔ E1 (E5–1)	W–R ↔ BR	IG switch ON and Shift lever at D position	7.5 – 14
		IG switch ON and Shift lever at any position except D position	Below 1.5
R (E4–11) ↔ E1 (E5–1)	R–B ↔ BR	IG switch ON and Shift lever at R position	7.5 – 14
		IG switch ON and Shift lever at any position except R position	Below 1.5
NSW (E7–16) ↔ E1 (E5–1)	W–B ↔ BR	IG switch ON and Shift lever at P or N position	Below 3
		IG switch ON and Shift lever at any position except P and N position	9 – 14

*1: Alternates repeatedly between below 1.5 V and 4 – 5 V

*2: 4WD only

DI0SR–14

PROBLEM SYMPTOMS TABLE

HINT:

If a normal code is displayed during the DTC check but the trouble still occurs, check the circuits for each symptom in the order given in the matrix chart on the following pages and proceed to the page given for troubleshooting. The matrix chart is divided into 3 chapters.

When troubleshooting, check chapter 1 first. If instructed to proceed to chapter 2 or 3, proceed as instructed.

- If the instruction "Proceed to next circuit inspection shown on matrix chart" is given in the flow chart for each circuit, proceed to the circuit with the next highest number in the table to continue the check.
- If the trouble still occurs even though there are no abnormalities in any of the other circuits, then check and replace the ECM.

CHAPTER 1: ELECTRICAL CIRCUIT

Symptom	Suspect Item	See page
No up–shift (A particular gear, from 1st to 3rd, has no up–shift)	ECM	DI–398
No up–shift (3rd → O/D)	3. O/D main switch and O/D OFF indicator circuit 4. ECM	DI–440 DI–444 DI–398
No down–shift (O/D → 3rd)	1. O/D main switch and O/D OFF indicator circuit 2. ECM	DI–440 DI–444 DI–398
No down–shift (A particular gear, from 3rd to 1st, has no down–shift)	ECM	DI–398
No lock–up	ECM	DI–398
No lock–up off	ECM	DI–398
Shift point too high or too low	ECM	DI–398
Up–shift to O/D from 3rd while O/D main switch is OFF	1. O/D main switch and O/D OFF indicator circuit 2. ECM	DI–440 DI–444 DI–398
Up–shift to O/D from 3rd while engine is cold	ECM	DI–398
No kick–down	ECM	DI–398
Engine stalls when starting off or stopping	ECM	DI–398

CHAPTER 2: ON–VEHICLE REPAIR

Symptom	Suspect Item	See page
Vehicle does not move in any forward position and reverse position	1. Shift solenoid valve SLT 2. Transmission control rod 3. Manual valve 4. Primary regulator valve 5. Parking lock pawl 6. Off–vehicle repair (Chapter 3)	DI–437 DI–384 ▲ ▲ AT–17 –
Vehicle does not move in R position	Off–vehicle repair (Chapter 3)	–
Vehicle does not move in particular position or positions (except R position)	Off–vehicle repair (Chapter 3)	–
No up–shift (1st → 2nd)	1. 1–2 shift valve 2. Off–vehicle repair (Chapter 3)	▲ –
No up–shift (2nd → 3rd)	1. 2–3 shift valve 2. Off–vehicle repair (Chapter 3)	▲ –
No up–shift (3rd → O/D)	1. 3–4 shift valve 2. Off–vehicle repair (Chapter 3)	▲ –
No down–shift (O/D → 3rd)	1. 3–4 shift valve 2. Off–vehicle repair (Chapter 3)	▲ –

Symptom	Suspect Item	See page
No down–shift (3rd → 2nd)	1. 2–3 shift valve 2. Off–vehicle repair (Chapter 3)	▲ –
No down–shift (2nd → 1st)	1. 1–2 shift valve 2. Off–vehicle repair (Chapter 3)	▲ –
No lock–up or No lock–up off	1. Lock–up control valve 2. Lock–up relay valve 3. Off–vehicle repair (Chapter 3)	▲ ▲ –
Harsh engagement (N → D)	1. Accumulator control valve 2. Off–vehicle repair (Chapter 3)	▲ –
Harsh engagement (Lock–up)	1. Lock–up control valve 2. Lock–up relay valve 3. Off–vehicle repair (Chapter 3)	▲ ▲ –
Harsh engagement (N → R)	1. Accumulator control valve 2. C_2 accumulator 3. Off–vehicle repair (Chapter 3)	▲ ▲ –
Harsh engagement (N → L)	Low coast modulator valve	▲
Harsh engagement (1st → 2nd / D position)	1. Accumulator control valve 2. B_2 accumulator	▲ ▲
Harsh engagement (1st → 2nd / 2 position)	1. Accumulator control valve 2. B_2 accumulator	▲ ▲
Harsh engagement (1st → 2nd → 3rd → O/D)	1. Accumulator control valve 2. Throttle valve	▲ ▲
Harsh engagement (2nd → 3rd)	1. Accumulator control valve 2. C_2 accumulator 3. Off–vehicle repair (Chapter 3)	▲ ▲ –
Harsh engagement (3rd → O/D)	1. Accumulator control valve 2. Solenoid modulator valve 3. Off–vehicle repair (Chapter 3)	▲ ▲ –
Harsh engagement (O/D → 3rd)	1. Accumulator control valve 2. C_0 accumulator 3. Off–vehicle repair (Chapter 3)	▲ ▲ –
Slip or shudder (Forward and reverse)	1. Shift solenoid valve SLT 2. Transmission control rod 3. Oil strainer (2UZ–FE) (5VZ–FE) 4. Pressure relief valve 5. Off–vehicle repair (Chapter 3)	DI–437 DI–384 AT–13 ▲ –
Slip or shudder (Particular position)	1. Shift solenoid valve SLT 2. Transmission control rod 3. Off–vehicle repair (Chapter 3)	DI–437 DI–384 –
No engine braking (1st / L position)	1. Low coast modulator valve 2. Off–vehicle repair (Chapter 3)	▲ –
No engine braking (2nd / 2 position)	1. 2nd coast modulator valve 2. Off–vehicle repair (Chapter 3)	▲ –
No kick–down	1. 1–2 shift valve 2. 2–3 shift valve	▲ ▲

CHAPTER 3: OFF–VEHICLE REPAIR

Symptom	Suspect Item	See page
Vehicle does not move in any forward position and reverse position	1. O/D one–way clutch (F_0) 2. O/D direct clutch (C_0) 3. O/D brake (B_0) 4. O/D planetary gear unit 5. Torque converter clutch	▲ ▲ ▲ ▲ AT–39
Vehicle does not move in R position	1. 2nd coast brake (B_1) 2. Front and rear planetary gear unit 3. Direct clutch (C_2) 4. 1st & reverse brake (B_3) 5. O/D direct clutch (C_0)	▲ ▲ ▲ ▲ ▲
Vehicle does not move in D, 2 and L positions	Forward clutch (C_2)	▲
Vehicle does not move in D and 2 positions	No.2 one–way clutch (F_2)	▲
Vehicle does not move in 2 position	1st & reverse (B_3)	▲
Vehicle does not move in L position	1. 2nd brake (B_2) 2. 2nd coast brake (B_1) 3. Direct clutch (C_2)	▲ ▲ ▲
No up–shift (1st → 2nd)	1. 2nd brake (B_2) 2. No. 1 one–way clutch (F_1)	▲ ▲
No up–shift (2nd → 3rd)	Direct clutch (C_2)	▲
No up–shift (3rd → O/D)	O/D brake (B_0)	▲
No down–shift (2nd → 1st)	1. 2nd coast brake (B_1) 2. 2nd brake (B_2)	▲ ▲
No lock–up or no lock–up off	Torque converter clutch	AT–39
Harsh engagement (N → D)	Forward clutch (C_1)	▲
Harsh engagement (N → R)	1. Direct clutch (C_2) 2. 1st and reverse brake (B_3)	▲ ▲
Harsh engagement (2nd → 3rd)	2nd coast brake (B_1)	▲
Harsh engagement (3rd → O/D)	1. O/D direct clutch (C_0) 2. O/D brake (B_0) 3. O/D planetary gear unit	▲ ▲ ▲
Harsh engagement (O/D → 3rd)	O/D brake (B_0)	▲
Harsh engagement (Lock–up)	Torque converter clutch	AT–39
Slip or shudder (Forward and reverse / After warm–up)	1. Torque converter clutch 2. O/D one–way clutch (F_0) 3. O/D direct clutch (C_0)	▲ ▲ ▲
Slip or shudder (Forward and reverse / Just after engine starts)	Torque converter clutch	AT–39
Slip or shudder (R position)	1. Direct clutch (C_2) 2. 1st & reverse brake (B_3)	▲ ▲
Slip or shudder (1st)	1. Forward clutch (C_1) 2. No. 2 one–way clutch (F_2)	▲ ▲
Slip or shudder (2nd)	1. 2nd brake (B_2) 2. 2nd coast brake (B_1) 3. No. 1 one–way clutch (F_1)	▲ ▲ ▲
Slip or shudder (3rd)	Direct clutch (C_2)	▲
Slip or shudder (O/D)	O/D brake (B_0)	▲
No engine braking (1st – 3rd: D position)	O/D direct clutch (C_0)	▲
No engine braking (1st: L position)	1st & reverse brake (B_3)	▲
No engine braking (2nd: 2 position)	2nd coast brake (B_1)	▲

Symptom	Suspect Item	See page
Poor acceleration (All positions)	Torque converter clutch	AT–39
Poor acceleration (O/D)	1. O/D direct clutch (C_0) 2. O/D planetary gear unit	▲ ▲
Poor acceleration (other than O/D)	O/D brake (B_0)	▲
Poor acceleration (other than 2nd)	1. 2nd coast brake (B_1) 2. 2nd brake (B_2)	▲ ▲
Poor acceleration (1st and 2nd)	Direct clutch (C_2)	▲
Poor acceleration (L and R positions)	1st & reverse brake (B_3)	▲
Poor acceleration (R position)	Forward clutch (C_1)	▲
Engine stalls when starting off or stopping	Torque converter clutch	AT–39

▲: A340E, A340F AUTOMATIC TRANSMISSION Repair Manual Pub. No. RM688U

DIA8V–01

CIRCUIT INSPECTION

DTC	P0500	Vehicle Speed Sensor ”A”

CIRCUIT DESCRIPTION

The vehicle speed sensor outputs a 4–pulse signal during each revolution of the rotor shaft, which is rotated by the transmission output shaft via the driven gear. After this signal is converted into a more precise rectangular waveform by the waveform shaping circuit inside the combination meter, it is then transmitted to the ECM. The ECM determines the vehicle speed based on the frequency of these pulse signals.

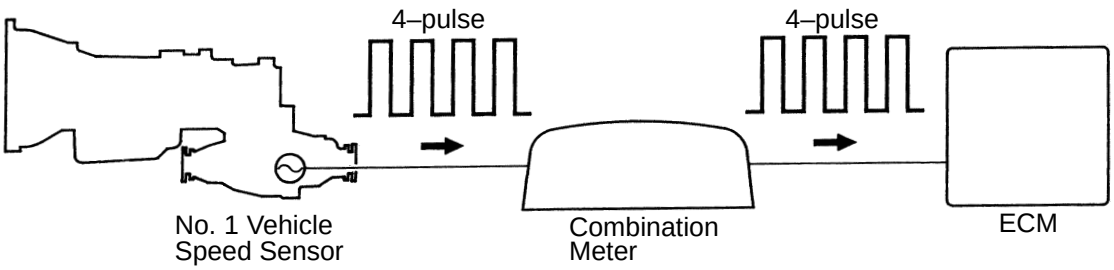

P22487

DTC No.	DTC Detecting Condition	Trouble Area
P0500	ECM detects following conditions simultaneously for 500 times (2–trip detection logic) ▲No SP1 (No. 1 speed sensor) signal while ECM detects SP2 (No. 2 speed sensor) signal ▲Vehicle speed is 9 km/h or more for 4 sec. ▲Park/neutral position switch is OFF (Except P and N positions) ▲Transfer is at any position except N position (4WD)	▲Open or short in No. 1 vehicle speed sensor circuit ▲No. 1 vehicle speed sensor ▲Combination meter ▲ECM

WIRING DIAGRAM

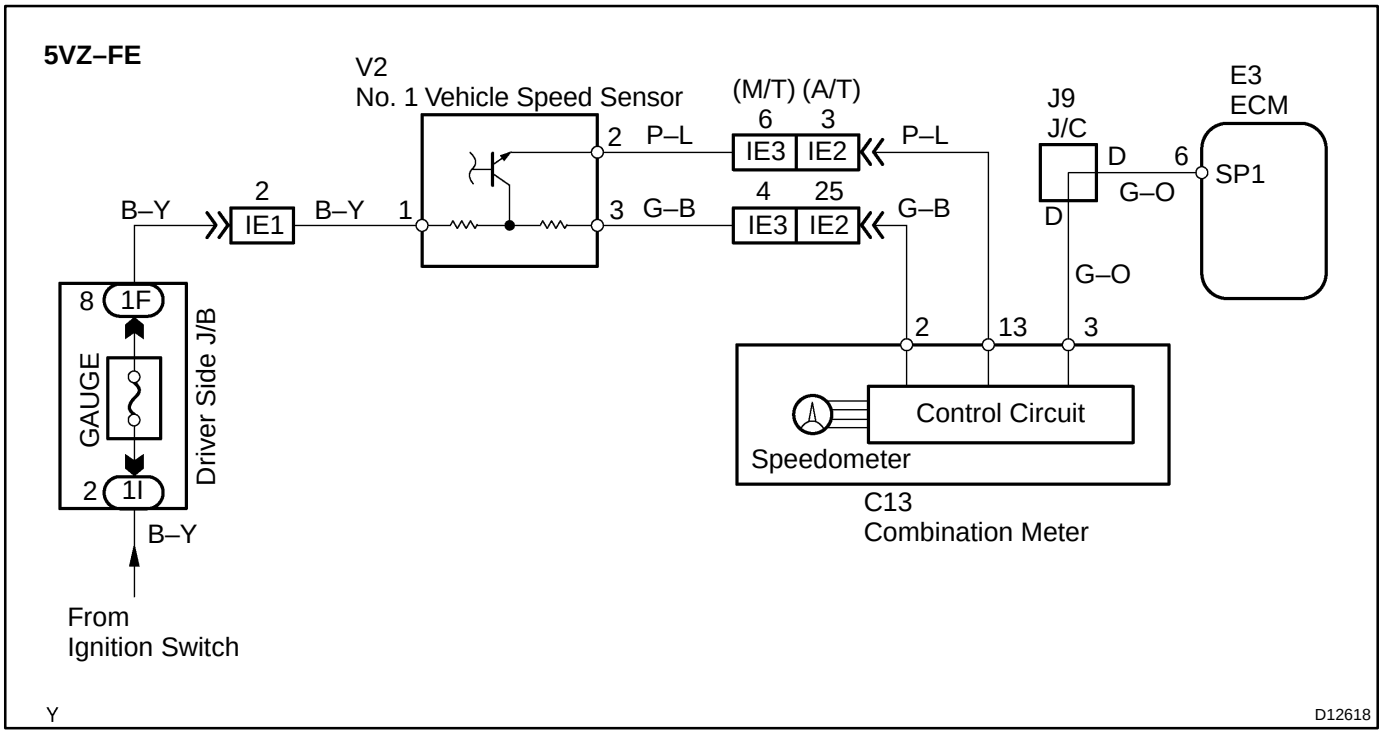

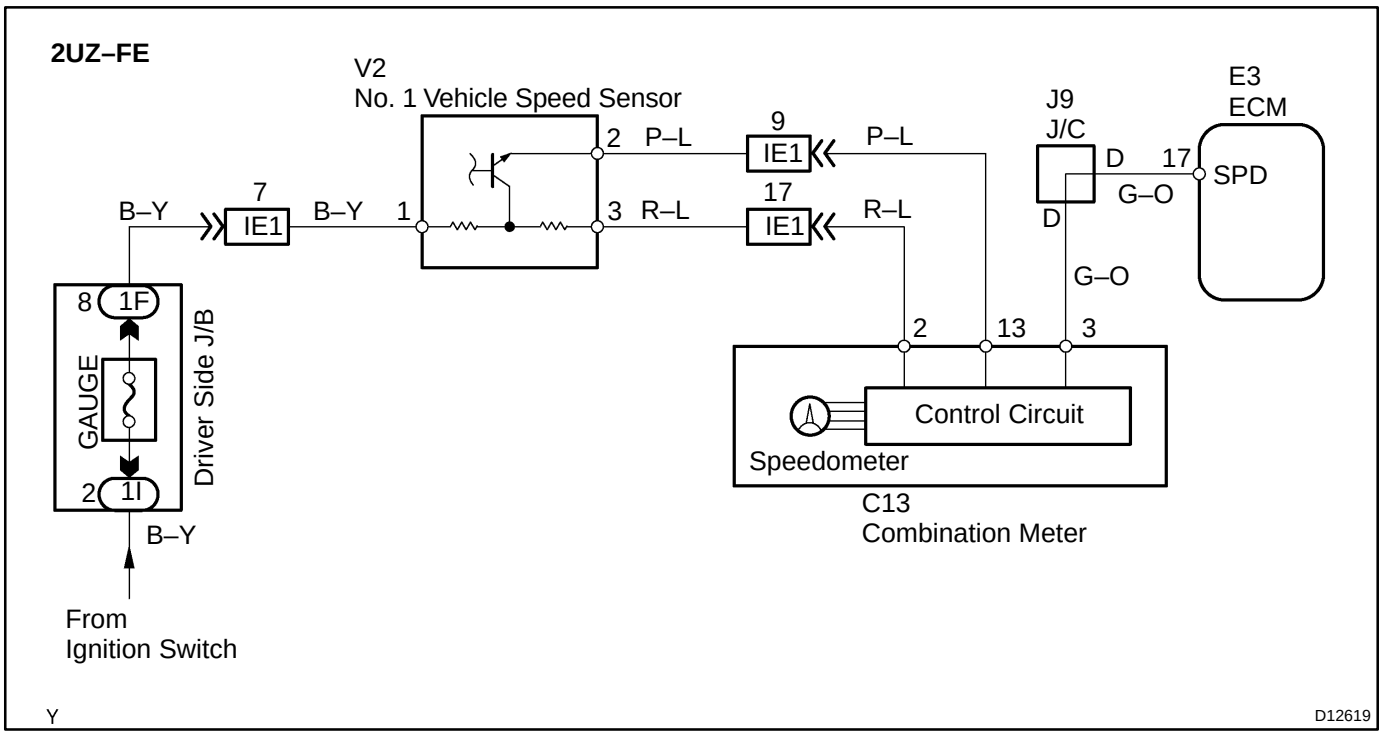

INSPECTION PROCEDURE

1	**Check operation of speedometer.**

CHECK:

Drive the vehicle and check if the operation of the speedometer in the combination meter is normal.

HINT:

The vehicle speed sensor is operating normally if the speedometer display is normal.

OK → **Go to step 5.**

NG

2	**Check power source for No. 1 vehicle speed sensor.**

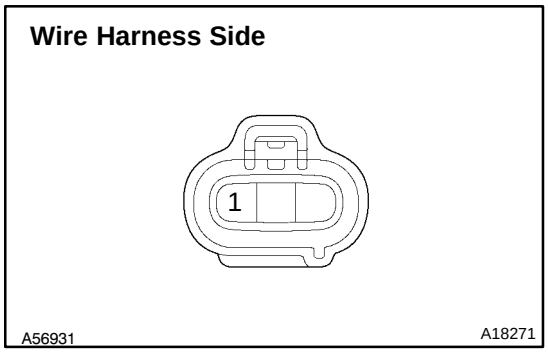

CHECK:

(a) Disconnect the sensor connector.
(b) Turn the ignition switch ON.
(c) Measure the voltage between terminal 1 on the wire harness side connector and the body ground.

OK:

10 – 14 V

NG → **Repair or replace wire harness between sensor and power source circuit.**

OK

3	**Check No. 1 vehicle speed sensor.**

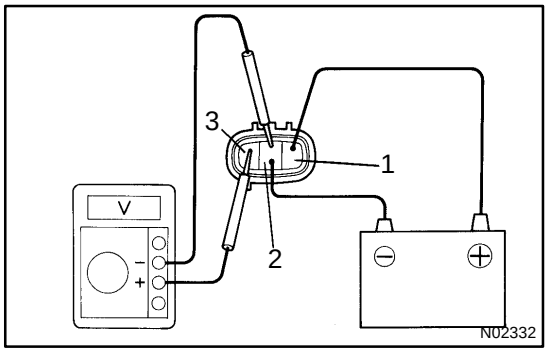

CHECK:

(a) Remove the sensor.
(b) Connect the volt meter and battery as shown in the illustration.
(c) Measure the voltage when rotating the sensor shaft.

OK:

The voltage changes between 0 V and battery voltage.

NG → **Replace speed sensor.**

OK

4	**Check harness and connector between combination meter and No. 1 vehicle speed sensor.**

NG → **Repair or replace harness and connector between combination meter and sensor.**

OK

Replace combination meter.

5	**Check harness and connector between combination meter and ECM.**

NG → **Repair or replace harness and connctor between combination meter and ECM.**

OK

Replace ECM.

DTC	P0705	Transmission Range Sensor Circuit Malfunction (PRNDL Input)

DTC	P0850	Park/Neutral Switch Input Circuit

CIRCUIT DESCRIPTION

The park/neutral position switch detects the shift lever position and sends signals to the ECM.

DTC No.	DTC Detection Condition	Trouble Area
P0705	2 or more switches are ON simultaneously at R, N, D, 2 and L positions (2–trip detection logic)	▲Short in park/neutral position switch circuit ▲Park/neutral position switch ▲ECM
P0850	Park/neutral position switch remaines ON while driving under conditions (a) and (b) for 30 sec. (2–trip detection logic) (a) Vehicle speed: 70 km/h (44 mph) or more (b) Engine speed: 1,500 – 2,500 rpm	

WIRING DIAGRAM

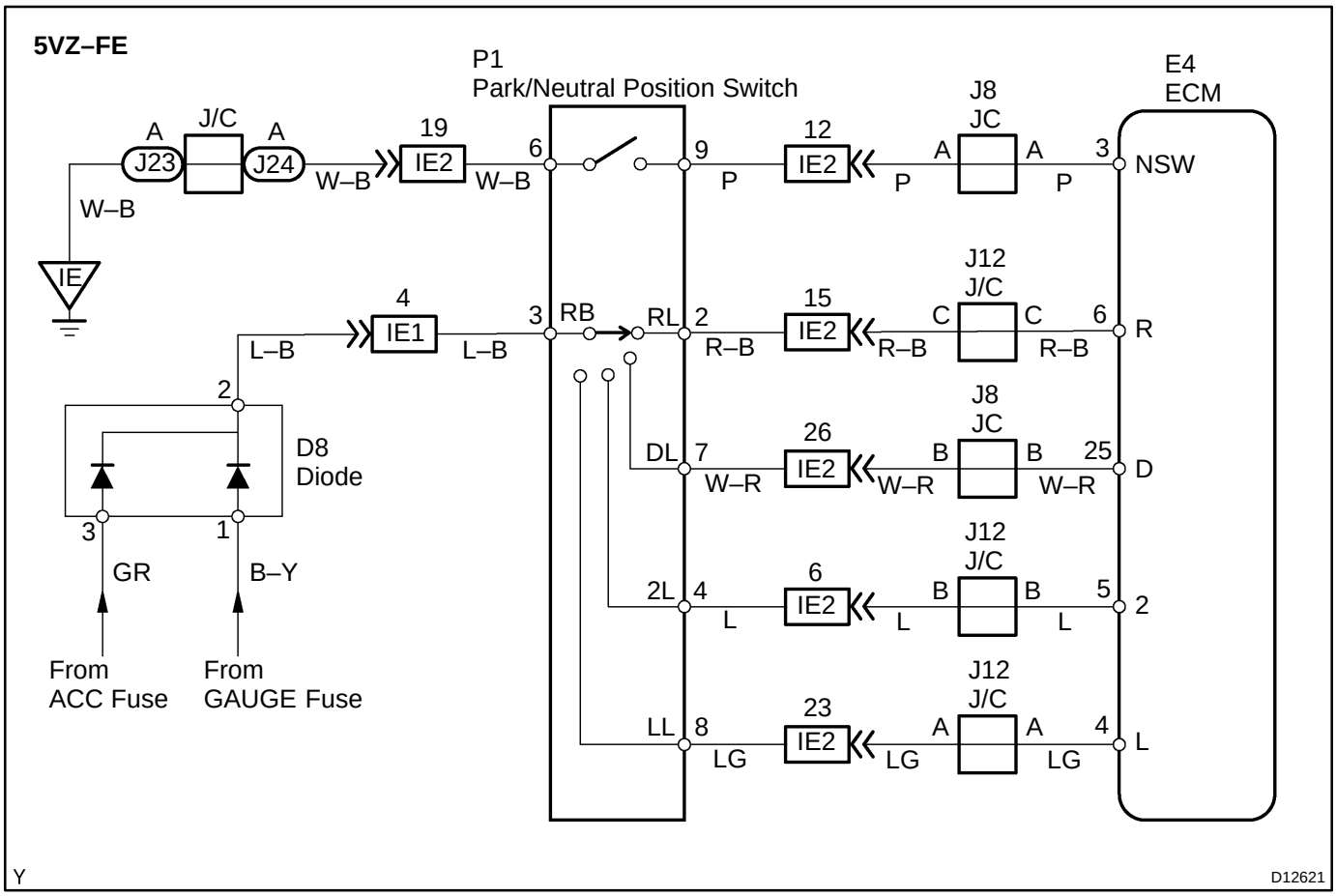

2UZ–FE

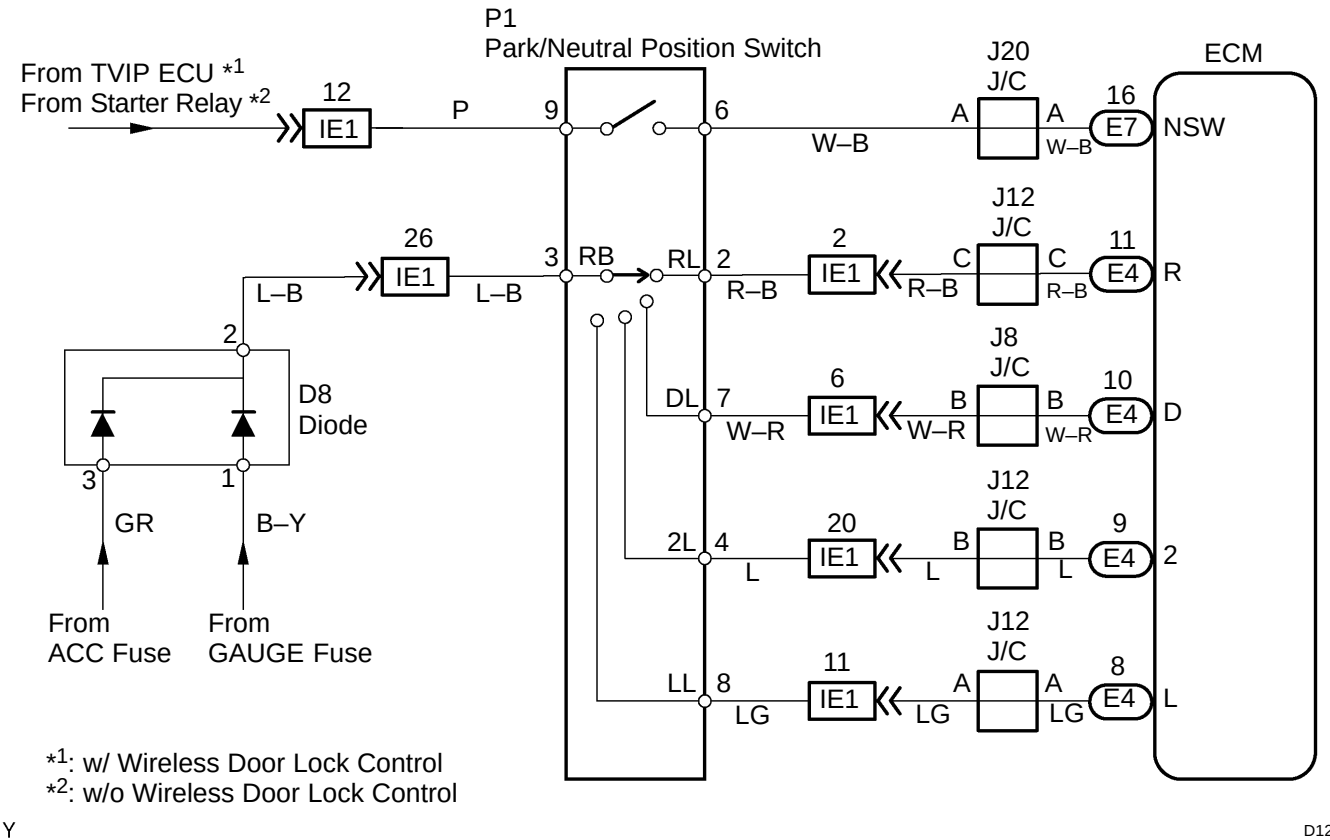
P1
Park/Neutral Position Switch
From TVIP ECU *1
From Starter Relay *2
12
IE1
P
9
6
W–B
J20
J/C
A
A
W–B
16
E7
NSW
ECM
26
IE1
3
RB
RL
2
L–B
L–B
R–B
2
IE1
C
C
R–B
11
E4
R
J12
J/C
2
D8
Diode
3
1
GR
B–Y
From
ACC Fuse
From
GAUGE Fuse
DL
7
W–R
6
IE1
B
B
W–R
10
E4
D
J8
J/C
2L
4
L
20
IE1
B
B
L
9
E4
2
J12
J/C
LL
8
LG
11
IE1
A
A
LG
8
E4
L
J12
J/C
*1: w/ Wireless Door Lock Control
*2: w/o Wireless Door Lock Control
Y
D12622

INSPECTION PROCEDURE

1	**Read PNP, REVERSE, DRIVE, 2ND and LOW signals.**

When using hand–held tester:

PREPARATION:

(a) Connect the hand–held tester to the DLC3.

(b) Turn the ignition switch ON and the hand–held tester main switch ON.

CHECK:

Shift the lever into the P, R, D, N, 2 and L positions, and read the PNP, REVERSE, 2ND and LOW signals on the hand–held tester.

OK:

Shift position	Signal
2	2ND OFF → ON
L	LOW OFF → ON
D	DRIVE OFF → ON
R	REVERSE OFF → ON
P, N	PNP OFF → ON

When not using hand–held tester:

PREPARATION:

Turn the ignition switch ON.

CHECK:

Measure the voltage between each terminal of the ECM and the body ground when shifting the shift lever, as shown in the table below.

OK:

Position	NSW ↔ Body ground	R ↔ Body ground	D ↔ Body ground	2 ↔ Body ground	L ↔ Bodyground
P	0 V	0 V	0 V	0 V	0 V
R	9 – 14 V *	7.5 – 14 V *	0 V	0 V	0 V
N	0 V	0 V	0 V	0 V	0 V
D	9 – 14 V	0 V	7.5 – 14 V	0 V	0 V
2	9 – 14 V	0 V	0 V	7.5 – 14 V	0 V
L	9 – 14 V	0 V	0 V	0 V	7.5 – 14 V

*: The voltage will drop slightly, because of the back–up light.

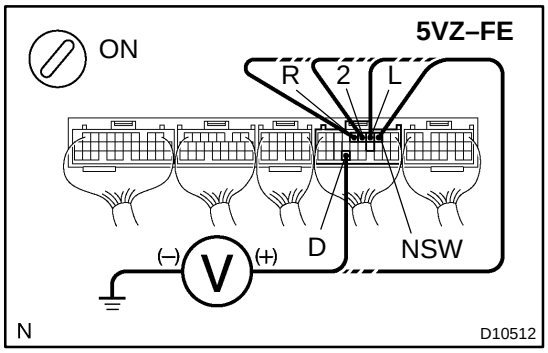

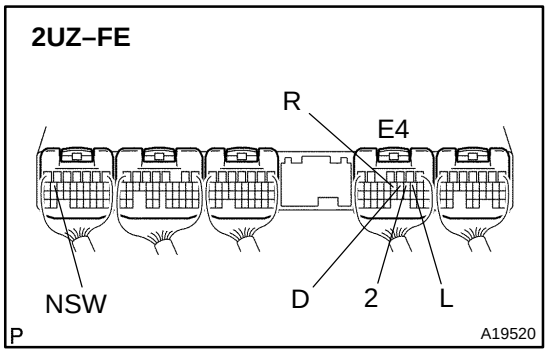

OK → **Check and replace ECM (See page DI–398).**

NG

2	Check park/neutral position switch.

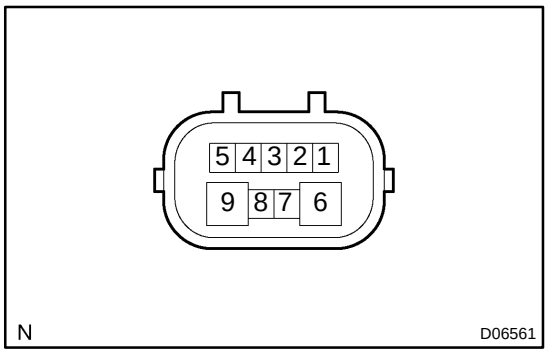

PREPARATION:

Remove the park/neutral position switch.

CHECK:

Check the continuity between the switch terminals when operating the switch lever, as shown in the table below.

OK:

Switch Position	Terminal No.	Specified Condition
R	6 – 3	Contuinuity
Except R		No contuinuity
D	7 – 3	Contuinuity
Except D		No contuinuity
2	4 – 3	Contuinuity
Except 2		No contuinuity
L	8 – 3	Contuinuity
Except L		No contuinuity
P and N	9 – 6	Contuinuity
Except P and N		No contuinuity

NG → **Replace park/neutral position switch (See page AT–12).**

OK

3	Check harness and connector between ECM and park/neutral position switch.

NG → **Repair or replace harness and connector.**

OK

Replace ECM.

DTC	P0710	Transmission Fluid Temperature Sensor ”A” Circuit

DTC	P0712	Transmission Fluid Temperature Sensor ”A” Circuit Low Input

DTC	P0713	Transmission Fluid Temperature Sensor ”A” Circuit High Input

CIRCUIT DESCRIPTION

The ATF temperature sensor converts fluid temperature value into a resistance value which is input into the ECM.

DTC No.	DTC Detecting Condition	Trouble Area
P0710	Either (a) or (b) is detected momentary within 0.5 sec. when neither P0712 or P0713 is not detected (a) ATF temperature sensor resistance is less than 79 Ω. (b) ATF temperature sensor resistance is more than 156 kΩ.	▲Open or short in ATF temperature sensor circuit ▲ATF temperature sensor ▲ECM
P0712	ATF temperature sensor resistance is less than 79 Ω. for 0.5 sec. or more	
P0713	ATF temperature sensor resistance is more than 156 kΩ. for 0.5 sec. or more	

WIRING DIAGRAM

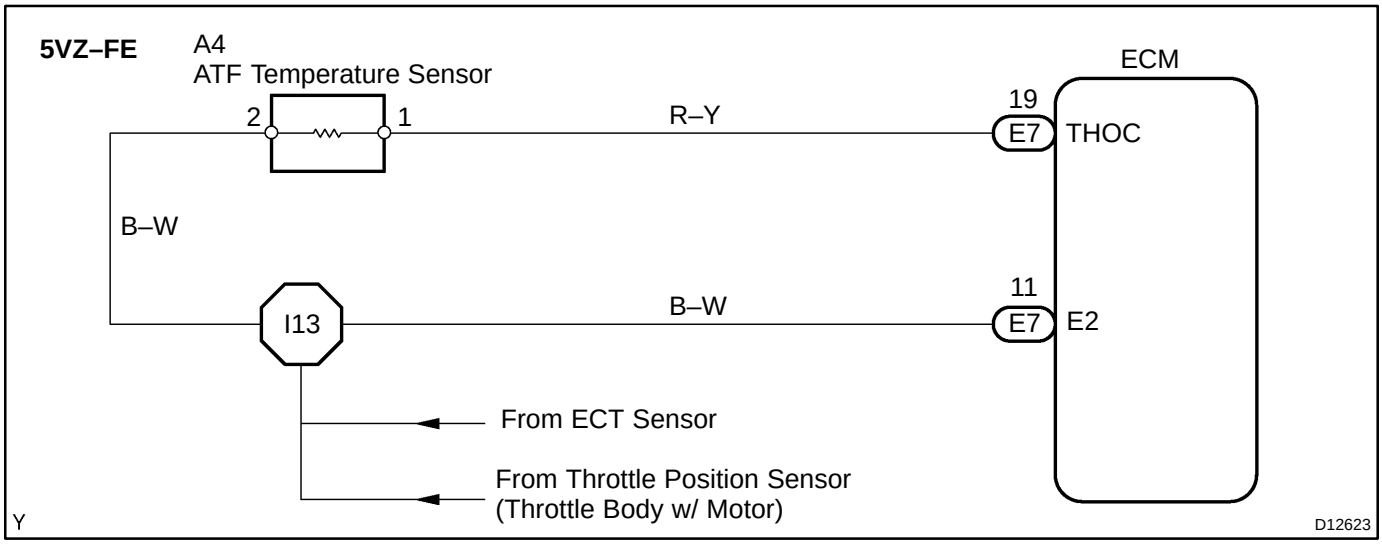

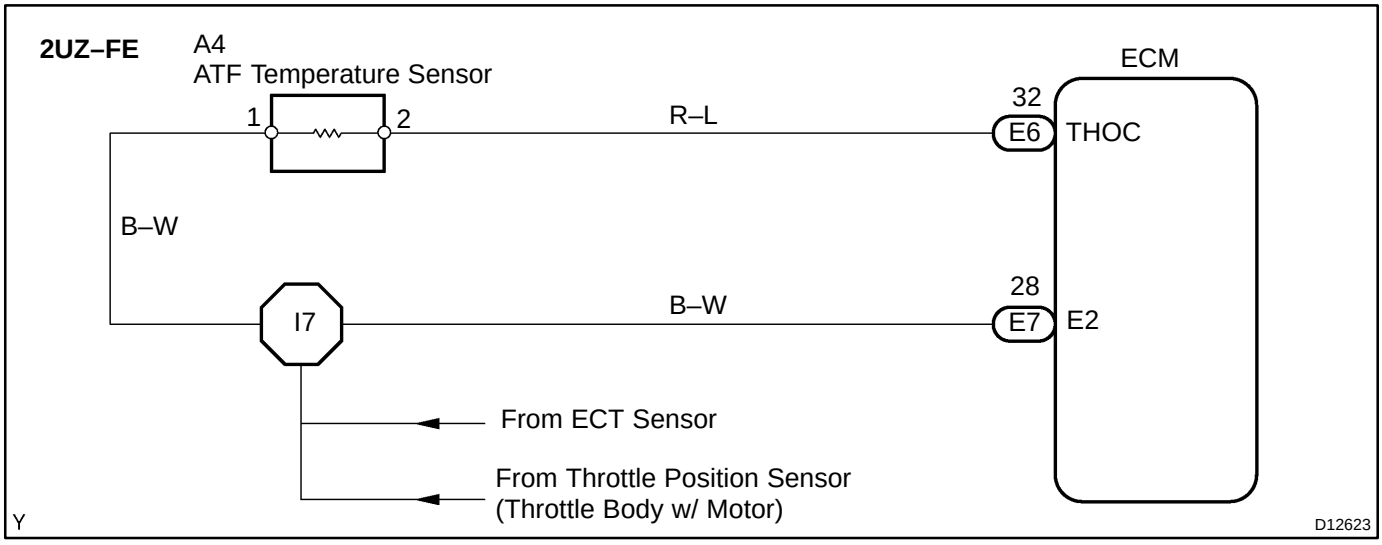

INSPECTION PROCEDURE

1	**Check ATF temperature sensor.**

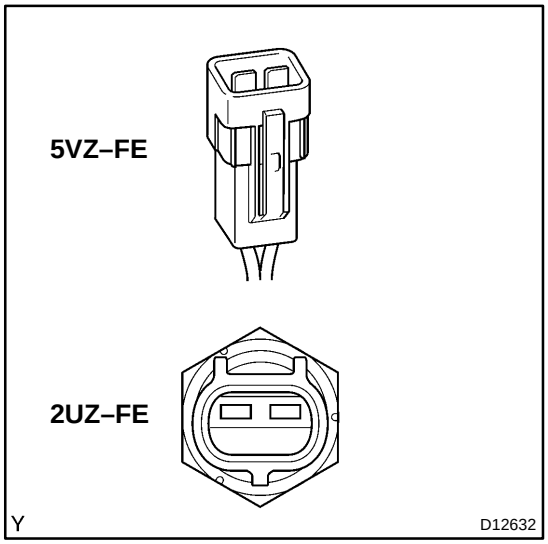

PREPARATION:
Disconnect the ATF temperature sensor connector.
CHECK:
Measure the resistance between the sensor connector terminals.
OK:
79 Ω – 156 kΩ

NG → **Replace ATF temperature sensor.**

OK

2	**Check harness and connector between ATF temperature sensor and ECM.**

NG → **Repair or replace harness or connector.**

OK

Replace ECM.

DIA90–01

DTC	P0717	Input Speed Sensor Circuit No Signal

CIRCUIT DESCRIPTION

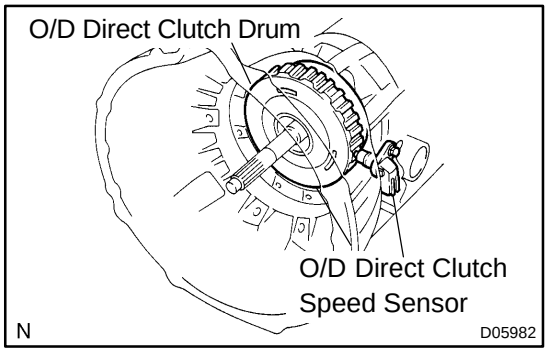

The O/D direct clutch speed sensor detects the rotation speed of the O/D input shaft by the rotation of the O/D direct clutch drum. Its construction is the same as that of the No.2 vehicle speed sensor (See page DI–404).
By comparing the O/D direct clutch speed signal and No.2 vehicle speed sensor signal, the ECM detects the shift timing of the gears, and appropriately controls the engine torque and hydraulic pressure in response to various conditions, thus smooth gear shift is realized.

DTC No.	DTC Detection Condition	Trouble Area
P0717	All conditions below are detected for 5 sec. or more (2–trip detection logic) (a) Gear not changed (b) Gear position: 1st, 2nd 3rd or O/D (c) T/M input shaft rpm: 300 rpm or less (d) T/M output shaft rpm: 1,000 rpm or more (e) Park/neutral position switch: OFF (f) Shift solenoid valves No. 1, No. 2, SL and vehicle speed sensor are in normal operation	▲Open or short in O/D direct clutch speed sensor circuit ▲O/D direct clutch speed sensor ▲ECM

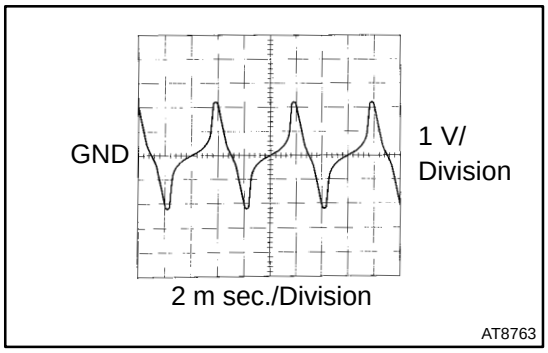

HINT:
The waveform between terminals NCO^{+} and NCO^{-} while the engine is idling is shown on the left.

WIRING DIAGRAM

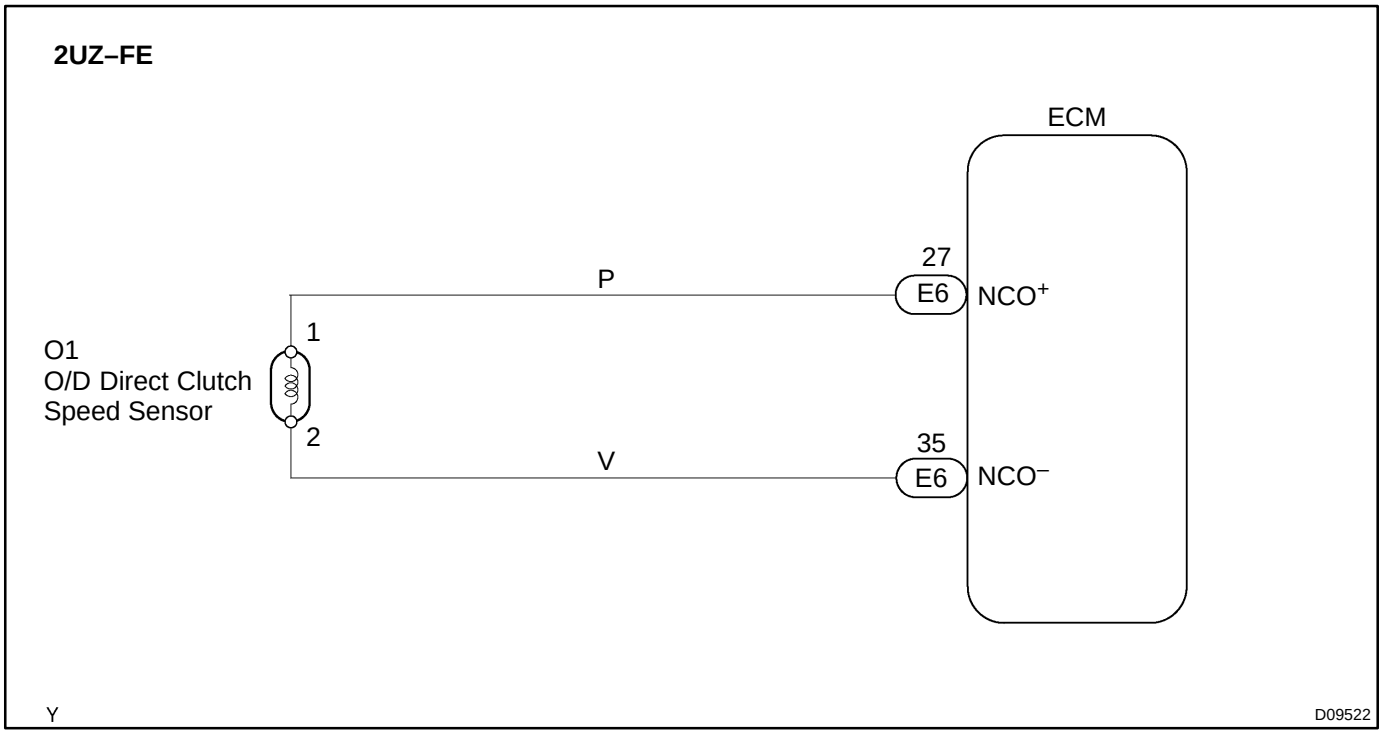

INSPECTION PROCEDURE

HINT:

When using the hand–held tester, start the inspection from step 1. When not using the hand–held tester, start from step 2.

1	**Read value of O/D direct clutch speed on hand–held tester.**

PREPARATION:

(a) Connect the hand–held tester to the DLC3.
(b) Start the engine.
(c) Turn the hand–held tester main switch ON.

CHECK:

Read the O/D direct clutch speed at the engine idling.

OK:

700 ± 50 rpm at engine idling

2	Check O/D direct clutch speed sensor.

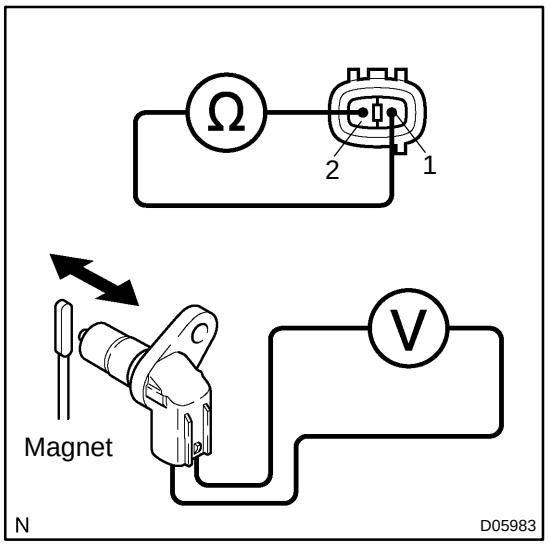

PREPARATION:

Remove the O/D direct clutch speed sensor (See page AT–9).

CHECK:

(a) Measure the resistance between the sensor terminals.
Standard: 560 – 680 Ω at 20˚C (68 ˚F)

(b) Measure the voltage between the sensor terminals when a magnet is put close to the front end of the sensor then taken away quickly.
Standard: Sensor generates voltage intermittently

HINT:

The generated voltage is extremely low.

OK:

Standard.

NG → **Replace O/D direct clutch speed sensor.**

OK

3	Check harness and connector between ECM and O/D direct clutch speed sensor.

NG → **Repair or replace harness and connector.**

OK

Replace ECM.

DTC	P0722	Output Speed Sensor

CIRCUIT DESCRIPTION

The No. 2 vehicle speed sensor detects the rotation speed of the transmission output shaft and sends signals to the ECM. The ECM determines the vehicle speed, based on these signals. An AC voltage is generated in the No. 2 vehicle speed sensor coil as the rotor mounted on the output shaft rotates, and this voltage is sent to the ECM. The gear shift point and lock–up timing are controlled by the ECM, based on the signals from this vehicle speed sensor and the throttle position sensor. If the No. 2 vehicle speed sensor malfunctions, the ECM uses input signals from the No. 1 vehicle speed sensor as a back–up signal.

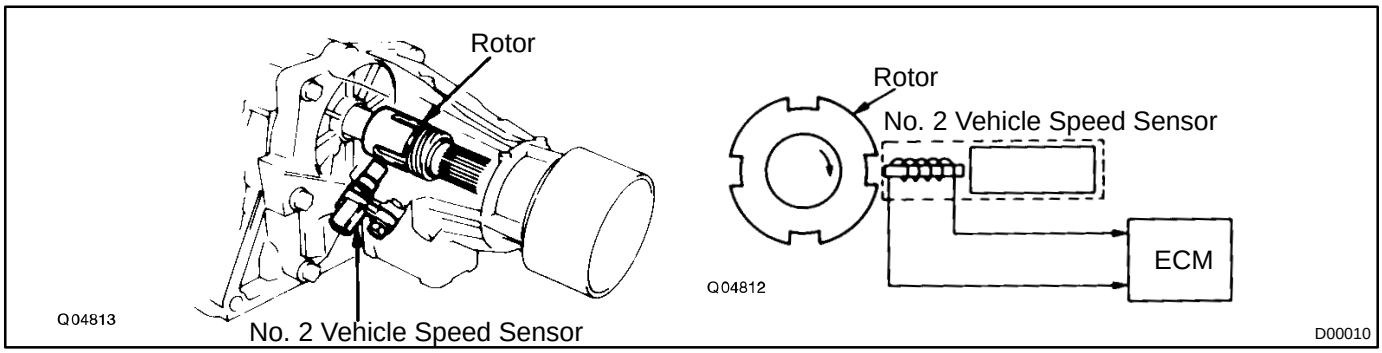

DTC No.	DTC Detection Condition	Trouble Area
P0722	All conditions below are detected 500 times or more continuously (2–trip detection logic) (a) No signal is input to ECM from No. 2 vehicle speed sensor while 4 pulses of No. 1 vehicle speed sensor signal are sent (b) Vehicle speed is 9 km/h (6 mph) or more for at least 4 sec. (c) Park/neutral position switch is OFF. (d) Transfer position is except neutral (4WD).	▲Open or short in No. 2 vehicle speed sensor circuit ▲No. 2 vehicle speed sensor ▲ECM

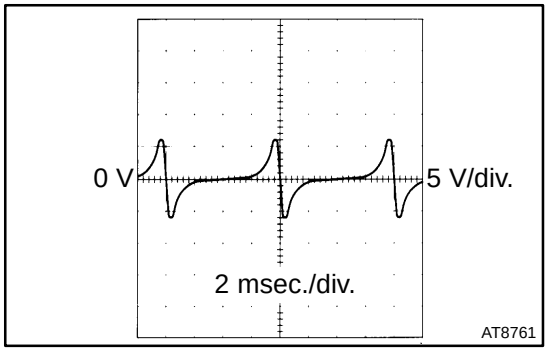

HINT:
The waveform between terminals $SP2^{+}$ and $SP2^{-}$ when vehicle speed is approx. 60 km/h (37 mph) is shown on the left.

WIRING DIAGRAM

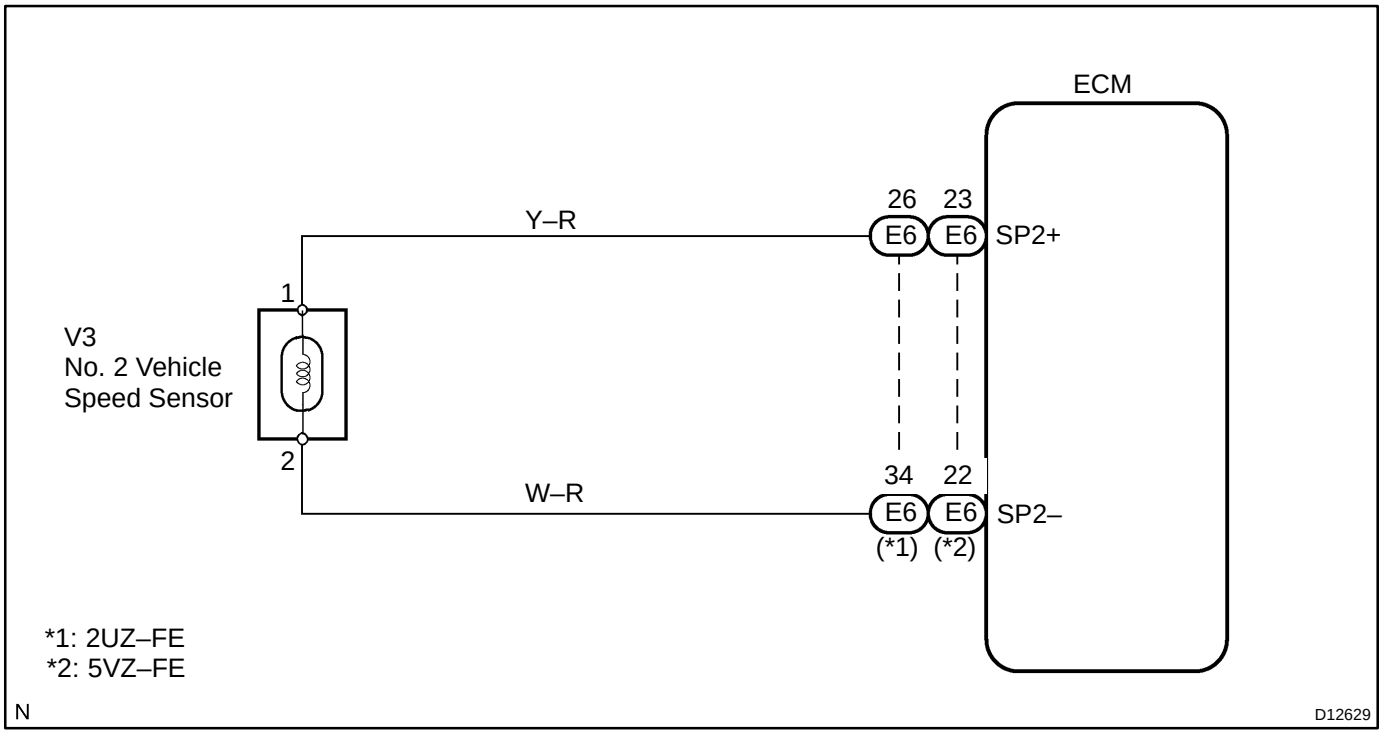

INSPECTION PROCEDURE

HINT:

When using the hand–held tester, start the inspection from step 1. When not using the hand–held tester, start from step 2.

1	**Read value of SPD (SP2) on hand–held tester.**

PREPARATION:

(a) Connect the hand–held tester to the DLC3.

(b) Start the engine.

(c) Turn the hand–held tester main switch ON.

CHECK:

Drive the vehicle and read the SPD value.

OK:

Vehicle speed matches SPD value.

2	Check No. 2 vehicle speed sensor.

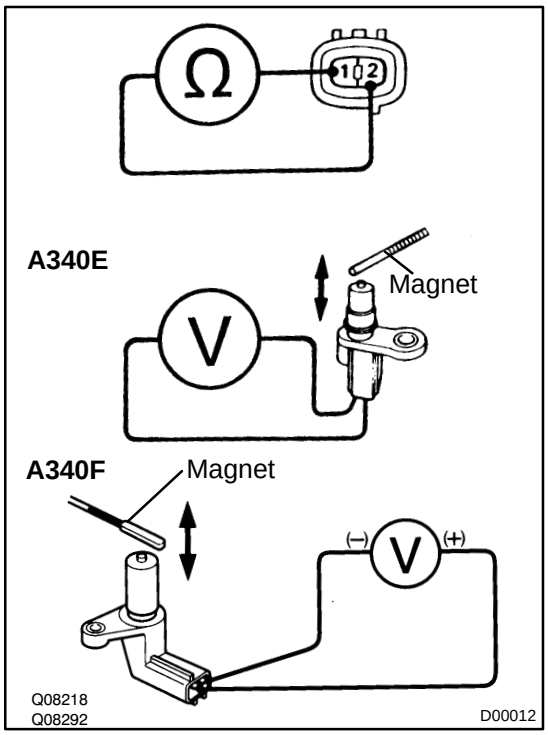

PREPARATION:

Remove the No. 2 vehicle speed sensor.

CHECK:

(a) Measure the resistance between the sensor terminals.
Standard: 560 – 680 Ω at 20 ˚C (68 ˚F)

(b) Measure the voltage between the sensor terminals when a magnet is put close to the front end of the sensor then taken away quickly.
Standard: Sensor generates voltage intermittently.

HINT:

The generated voltage is extremely low.

OK:

Standard.

NG → **Replace No. 2 vehicle speed sensor.**

OK

3	Check harness and connector between ECM and No. 2 vehicle speed sensor.

NG → **Repair or replace harness and connector.**

OK

Replace ECM.

DIA93–01

DTC	P0724	Brake Switch ”B” Circuit High

CIRCUIT DESCRIPTION

The purpose of this circuit is to prevent the engine from stalling, when brakes are suddenly applied while the vehicle is driven under the lock–up condition.
When the brake pedal is operated, this switch sends a signal to the ECM. Then the ECM cancels the operation of the lock–up clutch while braking is in progress.

DTC No.	DTC Detection Condition	Trouble Area
P0724	Stop light switch remains ON while vehicle is running (2–trip detection logic)	▲Short in stop light switch signal circuit ▲Stop light switch ▲ECM

WIRING DIAGRAM

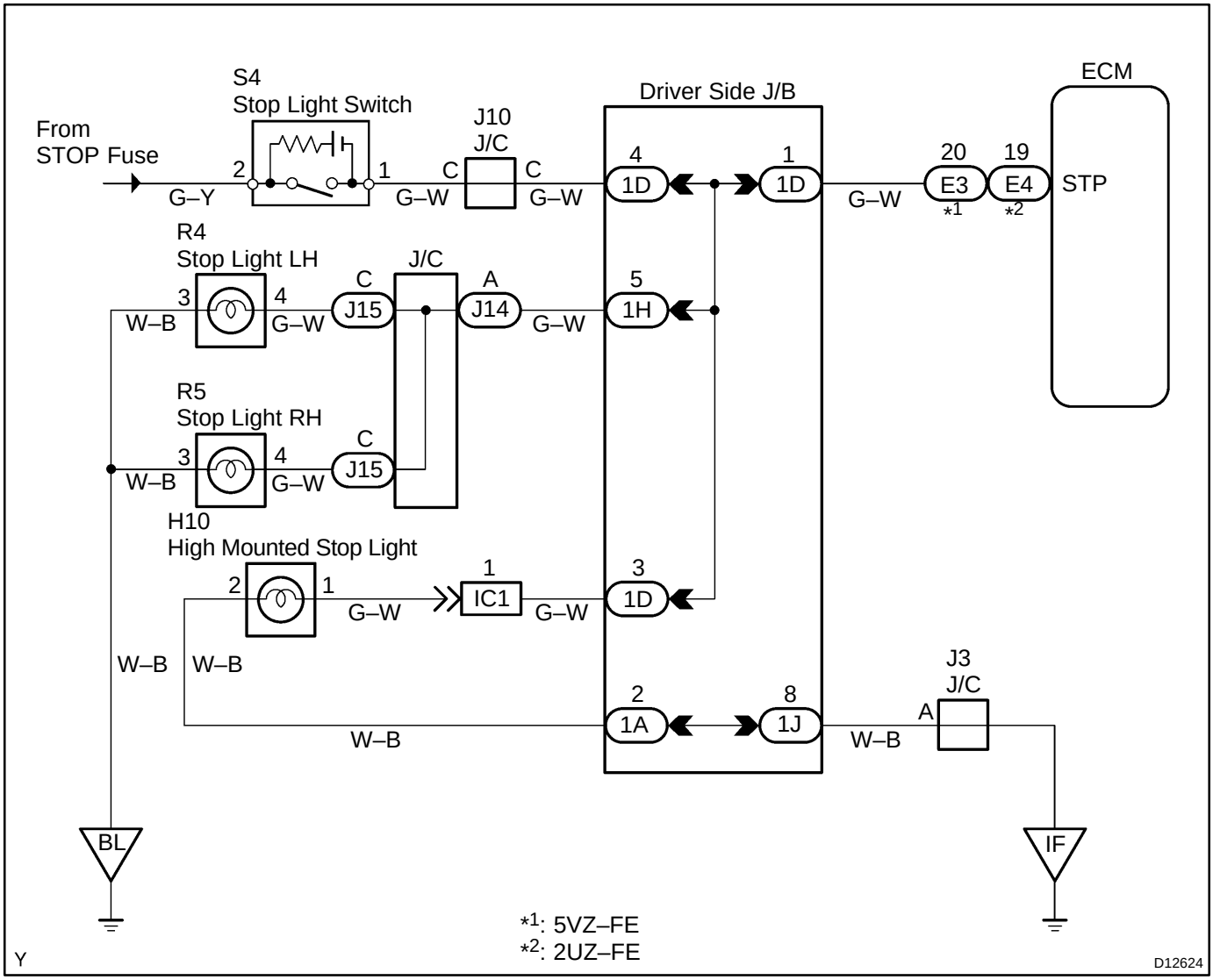

INSPECTION PROCEDURE

1	**Check stop light operation.**

CHECK:

Check that any of the stop lights and high mounted stop light lights up when depressing the brake pedal.

OK:

Stop lights light up.

NG → **Go to step 3.**

OK

2	**Check harness and connector between ECM and driver side J/B.**

NG → **Repair or replace harness or connector.**

OK

Replace ECM.

3	Check stop light switch.

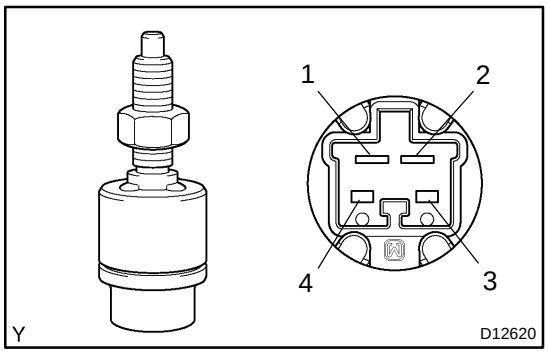

PREPARATION:

Remove the stop light switch.

CHECK:

Check the continuity between the switch terminals when operating the switch, as shown in the table below.

Standard:

Switch	Terminal No.	Specified Condition
Released	1 ↔ 2	No continuity
	3 ↔ 4	Continuity
Pressed	1 ↔ 2	Continuity
	3 ↔ 4	No continuity

NG → **Replace stop light switch.**

OK

Go to stop light system (See page BE–39).

DTC	P0741	Torque Converter Clutch Solenoid Performance (Shift Solenoid Valve SL)

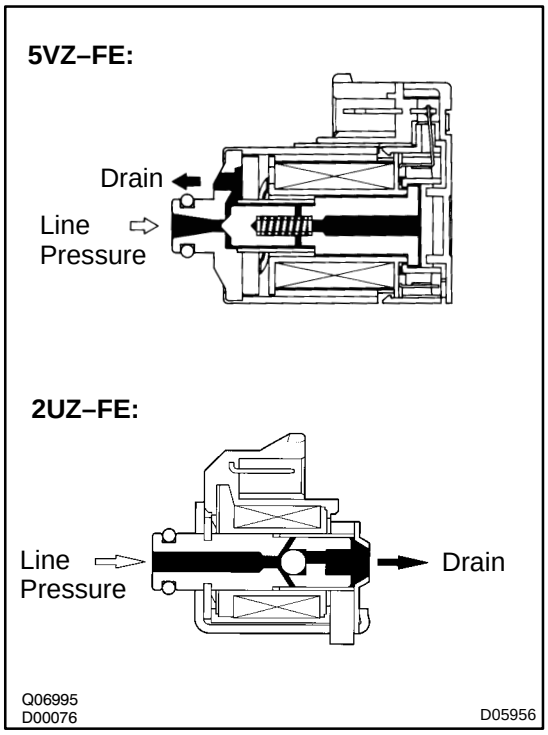

SYSTEM DESCRIPTION

The ECM uses the signals from the throttle position sensor, air–flow meter and crankshaft position sensor to monitor the engagement condition of the lock–up clutch.

Then the ECM compares the engagement condition of the lock–up clutch with the lock–up schedule in the ECM memory to detect a mechanical trouble of the shift solenoid valve SL, valve body and torque converter clutch.

DTC No.	DTC Detection Condition	Trouble Area
P0741	Lock–up does not occur when vehicle is driven in the lock–up range (normal driving at 80 km/h [50 mph]), or lock–up remains ON in the lock–up OFF range (2–trip detection logic)	▲Shift solenoid valve SL is stuck open or closed ▲Valve body blocked up or stuck ▲Lock–up clutch

INSPECTION PROCEDURE

1	Check shift solenoid valve SL operation.

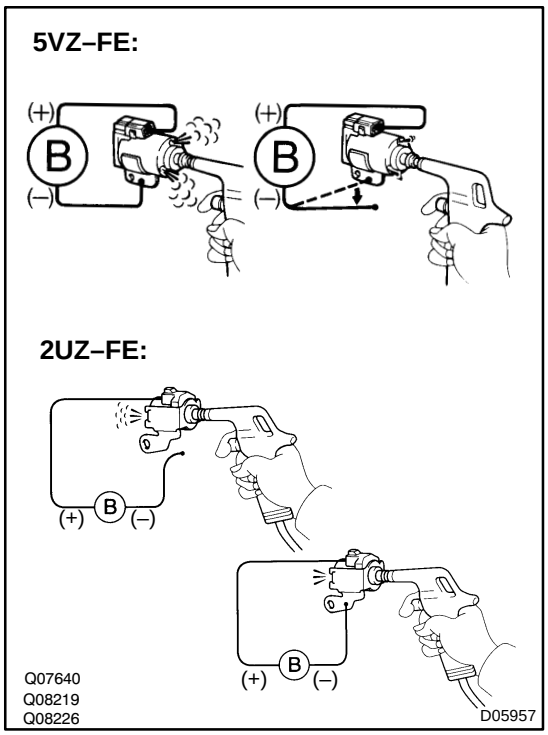

PREPARATION:

(a) Remove the oil pan.

(b) Remove the shift solenoid valve SL.

CHECK:

(a) Apply the 490 kPa (5 kgf/cm^2, 71 psi) of compressed air to check that the solenoid valve does not leak air.

(b) When battery voltage is applied to the shift solenoid valve, check that the solenoid valve opens.

OK:

(a): Solenoid valve does not leak air.

(b): Solenoid valve opens.

NG → **Replace solenoid valve SL.**

OK

2	Check valve body (See page DI–400).

NG → **Repair or replace valve body.**

OK

Replace torque converter clutch (See page AT–33 or AT–26).

DIA95–01

DTC	P0743	Torque Converter Clutch Circuit Electrical

CIRCUIT DESCRIPTION

The shift solenoid valve SL is turned ON and OFF by signals from the ECM to control the hydraulic pressure acting on the lock–up relay valve, which then controls the operation of the lock–up clutch.

DTC No.	DTC Detection Condition	Trouble Area
P0743	▲ECM detects open in solenoid SL circuit 4 times when solenoid SL is not operated (2–trip detection logic) ▲ECM detects short in solenoid SL circuit 4 times when solenoid SL is operated (2–trip detection logic)	▲Open or short in shift solenoid valve SL circuit ▲Shift solenoid valve SL ▲ECM

Fail safe function

If the ECM detects a malfunction, it turns the shift solenoid valve SL OFF.

WIRING DIAGRAM

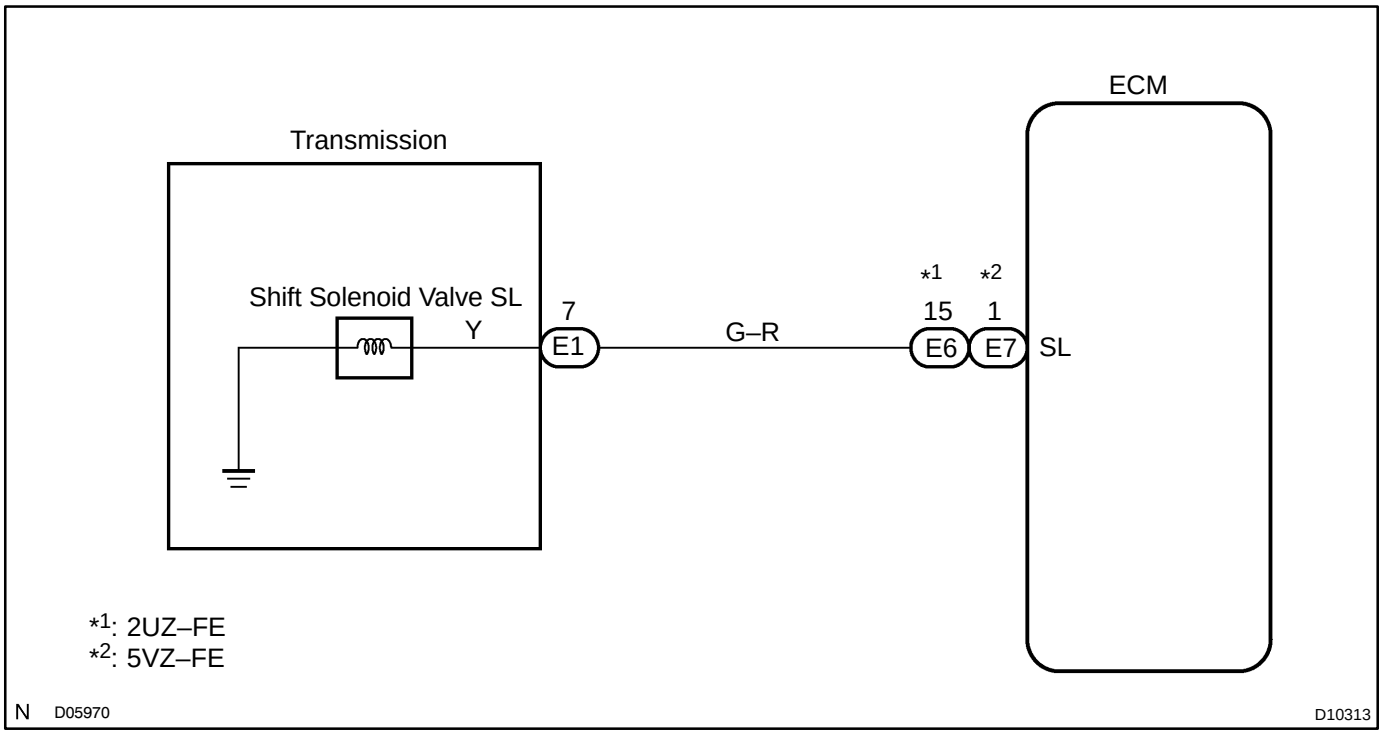

INSPECTION PROCEDURE

1	**Check harness and connector between ECM and shift solenoid SL.**

NG → **Repair or replace harness or connector.**

OK

2	**Check shift solenoid valve SL.**

5VZ–FE:

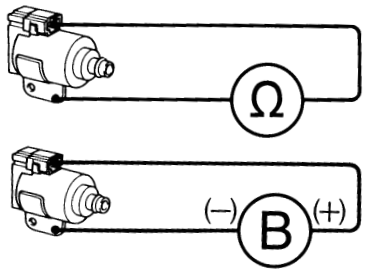

2UZ–FE:

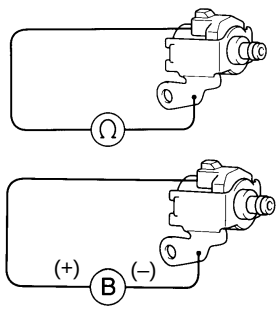

D00005
D03074
D05955

PREPARATION:

(a) Remove the oil pan.

(b) Remove the shift solenoid valve SL.

CHECK:

(a) Measure the resistance between the solenoid connector terminal and the body ground.
Standard: 11 – 15 Ω at 20˚C (68˚F)

(b) Connect the battery positive lead to the solenoid connector terminal and the battery negative lead to the solenoid body ground.
Standard: Solenoid operation noise is produced.

OK:

Standard.

NG → **Replace shift solenoid valve SL.**

OK

Replace ECM.

DTC	P0751	Shift Solenoid ”A” Performance (Shift Solenoid Valve S1)

DTC	P0756	Shift Solenoid ”B” Performance (Shift Solenoid Valve S2)

SYSTEM DESCRIPTION

The ECM uses signals from the vehicle speed sensor and direct clutch speed sensor to detect the actual gear position (the 1st, 2nd, 3rd or O/D gear). Then the ECM compares the actual gear with the shift schedule in the ECM memory to detect mechanical troubles of the shift solenoid valves, valve body or automatic transaxle (clutch, brake or gear etc.).

DTC No.	DTC Detecting Condition	Trouble Area
P0751	The gear required by the ECM does not match the actual gear when vehicle is driven (2–trip detection logic)	▲Shift solenoid valve No.1 is stuck open or closed ▲Valve body is blocked up or stuck ▲Automatic transaxle (clutch, brake or gear etc.)
P0756		▲Shift solenoid valve No.2 is stuck open or closed ▲Valve body is blocked up or stuck ▲Automatic transaxle (clutch, brake or gear etc.)

INSPECTION PROCEDURE

HINT:

Check the shift solenoid valve No. 1 when DTC P0751 is output. Check the shift solenoid valve No. 2 when DTC P0756 is output.

1	**Check shift solenoid valve No. 1 or No. 2 operation.**

5VZ–FE:

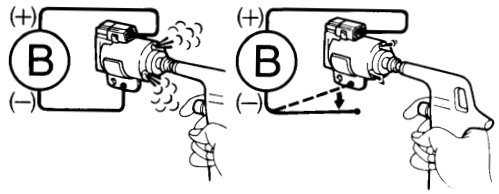

2UZ–FE:

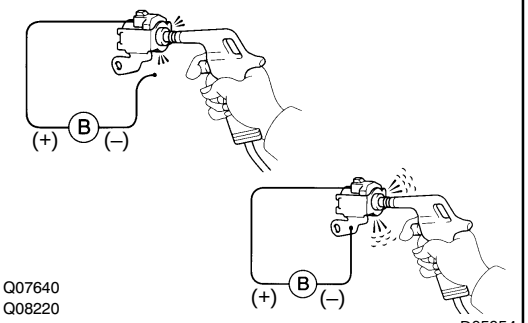

Q07640
Q08220
Q08221

D05954

PREPARATION:

(a) Remove the oil pan.

(b) Remove the shift solenoid valve No. 1 or No. 2.

CHECK:

(a) Apply 490 kPa (5 kgf/cm^2, 71 psi) of compressed air to check that the solenoid valve does not leak air.

(b) When battery positive voltage is applied to the shift solenoid valve, check that the solenoid valve opens.

OK:

(a): Solenoid valve does not leak air.

(b): Solenoid valve opens.

NG → **Replace shift solenoid valve No. 1 or No. 2.**

OK

2	**Check valve body (See page AT–13).**

NG → **Repair or replace valve body.**

OK

Repair or replace transmission (See page AT–33 or AT–26).

DTC	P0818	Driveline Disconnect Switch Input Circuit

CIRCUIT DESCRIPTION

The ECM detects the signal from the transfer neutral position switch.
This DTC indicates that the transfer neutral position switch remains ON.

DTC No.	DTC Detecting Condition	Trouble Area
P0818	Transfer neutral position switch remains ON while vehicle is running under conditions below for 30 sec. (2–trip detection logic) ▲Vehicle speed is 25 km/h or more ▲Transfer shift position is H	▲Short in transfer neutral position switch circuit ▲Transfer neutral position switch ▲ECM

WIRING DIAGRAM

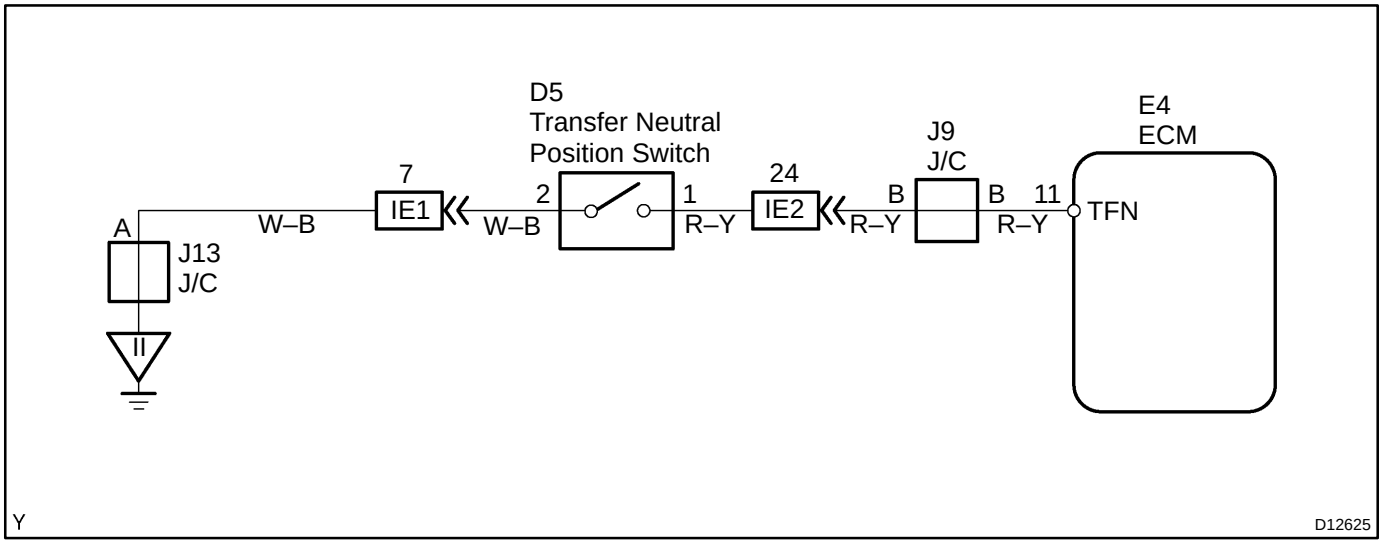

INSPECTION PROCEDURE

1	**Check transfer neutral position switch.**

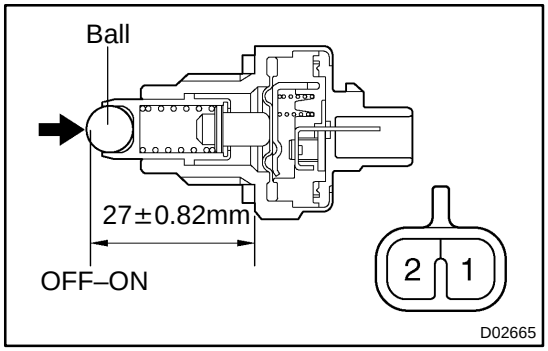

PREPARATION:

Remove the transfer neutral position switch.

CHECK:

Check the continuity between the switch terminals when pushing the ball at the tip of the switch.

OK:

Switch ball	Specified condition
Pushed	Continuity
Free	No continuity

NG → **Replace transfer neutral position switch.**

OK

2	**Check harness and connector between ECM and transfer neutral position switch.**

NG → **Repair or replace the harness or connector.**

OK

Replace the ECM.

DTC	P0973	Shift Solenoid ”A” Control Circuit Low

DTC	P0974	Shift Solenoid ”A” Control Circuit High

DTC	P0976	Shift Solenoid ”B” Control Circuit Low

DTC	P0977	Shift Solenoid ”B” Control Circuit High

CIRCUIT DESCRIPTION

Shifting from 1st to O/D is performed in combination with ON and OFF of the shift solenoid valves No. 1 and No. 2 controlled by the ECM. If an open or short circuit occurs in either of the shift solenoid valves, the ECM controls the remaining normal shift solenoid valve in order to allow the vehicle to be operated safely (Fail–safe function).

Fail–safe Function:

If either of the shift solenoid valve circuits develops an open or short, the ECM turns the other shift solenoid ON and OFF in order to shift to the gear positions shown in the table below. The ECM also turns the shift solenoid valve SL OFF at the same time. If both solenoids are malfunctioning, hydraulic control cannot be performed electrically but must be done manually. Manual shifting must be performed as shown in the following table (In the case of a short circuit, the ECM stops sending current to the short circuited solenoid).

Position	NORMAL			SHIFT SOLENOID NO. 1 MALFUNCTIONING			SHIFT SOLENOID NO. 2 MALFUNCTIONING			BOTH SOLENOIDS MALFUNCTIONING
	Solenoid valve		Gear	Solenoid valve		Gear	Solenoid valve		Gear	Gear when shift selector is manually operated
	No. 1	No. 2		No. 1	No. 2		No. 1	No. 2		
D	ON	OFF	1st	X	ON	3rd	ON	X	1st	O/D
	ON	ON	2nd	X	ON	3rd	OFF	X	O/D	O/D
	OFF	ON	3rd	X	ON	3rd	OFF	X	O/D	O/D
	OFF	OFF	O/D	X	OFF	O/D	OFF	X	O/D	O/D
2	ON	OFF	1st	X	ON	3rd	ON	X	1st	3rd
	ON	ON	2nd	X	ON	3rd	OFF	X	3rd	3rd
	OFF	ON	3rd	X	ON	3rd	OFF	X	3rd	3rd
L	ON	OFF	1st	X	OFF	1st	ON	X	1st	1st
	ON	ON	2nd	X	ON	2nd	ON	X	1st	1st

X: Malfunctions

DTC No.	DTC Detection Condition	Trouble Area
P0973	ECM detects open in solenoid valve No. 1 circuit 4 times when solenoid valve No. 1 is not operated	▲Open in shift solenoid valve No. 1 circuit ▲Shift solenoid valve No. 1 ▲ECM
P0974	ECM detects short in solenoid valve No. 1 circuit 4 times when solenoid valve No. 1 is operated	▲Short in shift solenoid valve No. 1 circuit ▲Shift solenoid valve No. 1 ▲ECM
P0976	ECM detects open in solenoid valve No. 2 circuit 4 times when solenoid valve No. 2 is not operated	▲Open in shift solenoid valve No. 2 circuit ▲Shift solenoid valve No. 2 ▲ECM
P0977	ECM detects short in solenoid valve No. 2 circuit 4 times when solenoid valve No. 2 is operated	▲Short in shift solenoid valve No. 2 circuit ▲Shift solenoid valve No. 2 ▲ECM

WIRING DIAGRAM

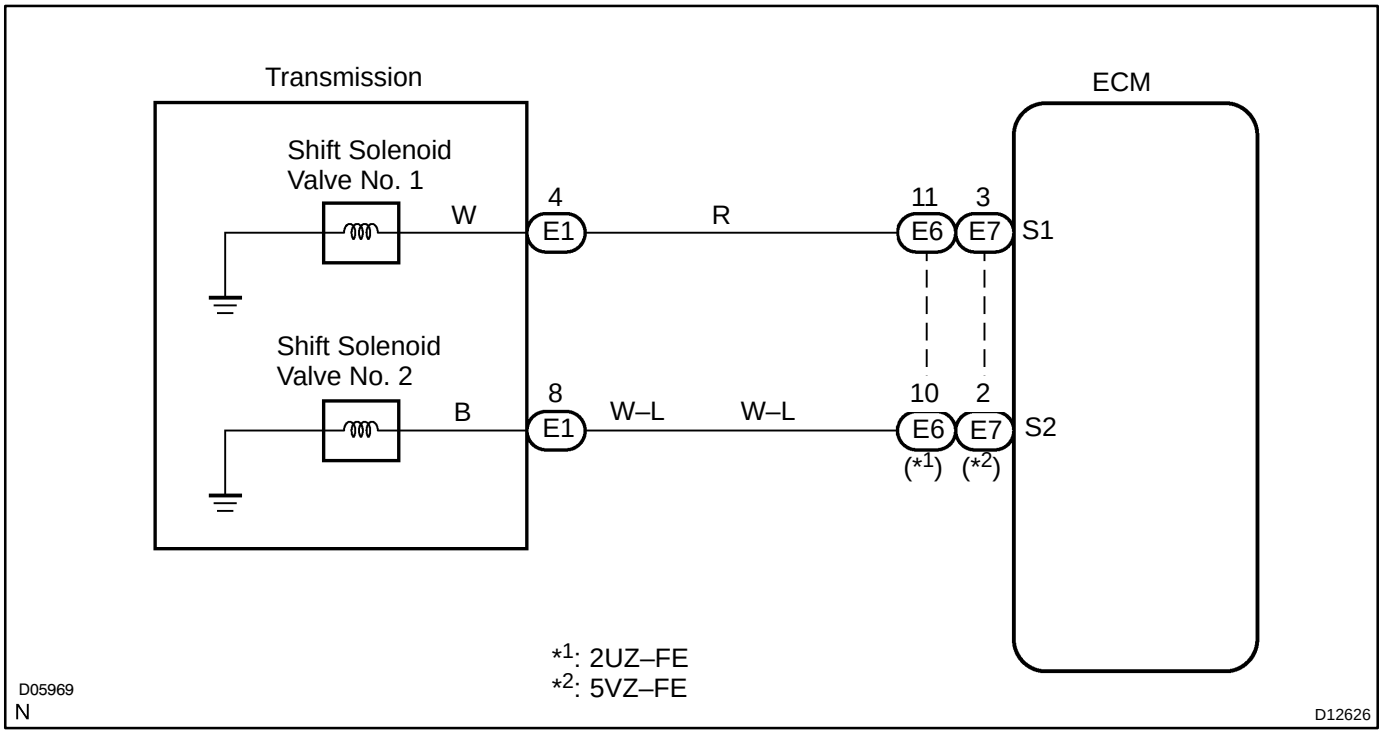

HINT:
Check the shift solenoid valve No. 1 when DTC P0973 and P0974 is output. Check the shift solenoid valve No. 2 when DTC P0976 and P0977 is output.

INSPECTION PROCEDURE

1	**Check harness and connector between ECM and shift solenoid valve No. 1 or No. 2.**

NG → **Repair or replace harness or connector.**

OK

2	Check shift solenoid valve No. 1 or No. 2.

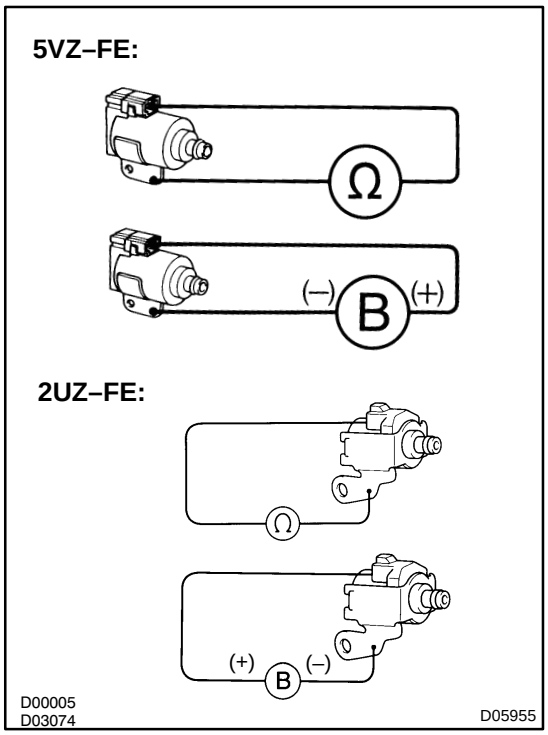

PREPARATION:

(a) Jack up the vehicle.
(b) Remove the oil pan.
(c) Remove the shift solenoid valve No. 1 or No. 2.

CHECK:

(a) Measure the resistance between the solenoid connector terminal and the body ground.
Standard: 11 – 15 Ω at 20˚C (68˚F)
(b) Connect the battery positive lead to the solenoid connector terminal and the battery negative lead to the solenoid body ground.
Standard: Solenoid operation noise is produced.

OK:

Standard.

NG → **Replace solenoid valve.**

OK

Replace ECM.

DIA9C–01

DTC	P1782	T/F L4 Range Position Switch Performance

CIRCUIT DESCRIPTION

The ECM detects the signal from the transfer L4 position switch.
This DTC indicates that the transfer L4 position switch remains ON.

DTC No.	DTC Detecting Condition	Trouble Area
P1782	Transfer L4 position switch remains ON while vehicle is running under conditions below for 18 seconds or more ▲Output shaft speed is 3000 rpm or less ▲Transfer shift positon is H	▲Short in transfer L4 position switch circuit ▲Transfer L4 position switch ▲ECM

WIRING DIAGRAM

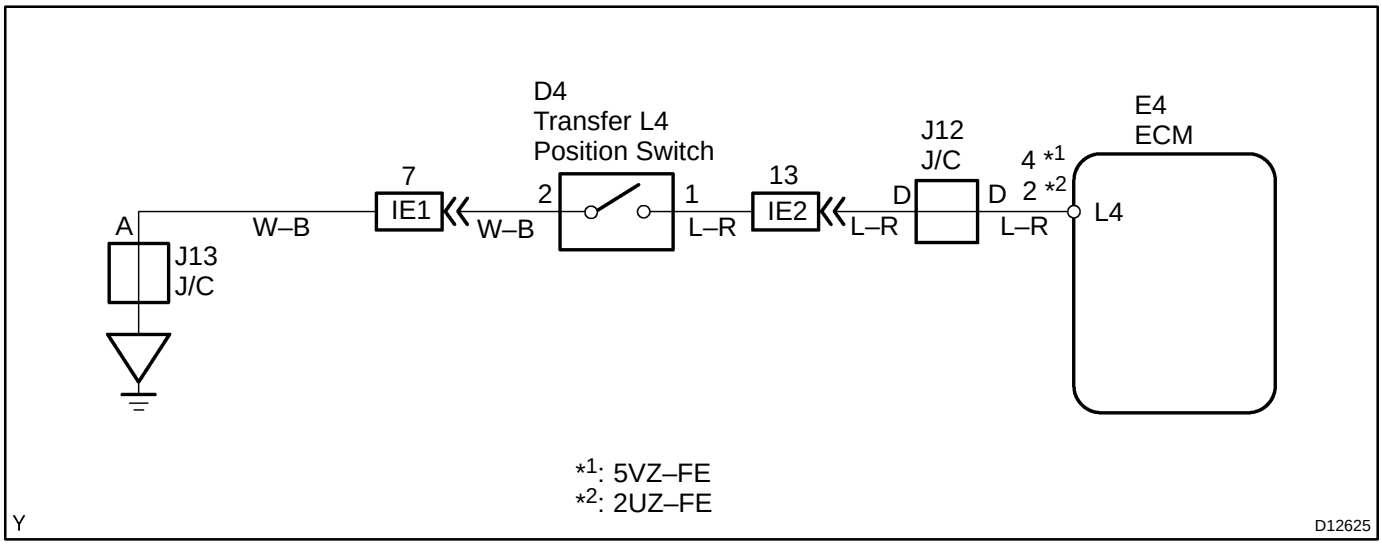

INSPECTION PROCEDURE

1	**Check transfer L4 position switch.**

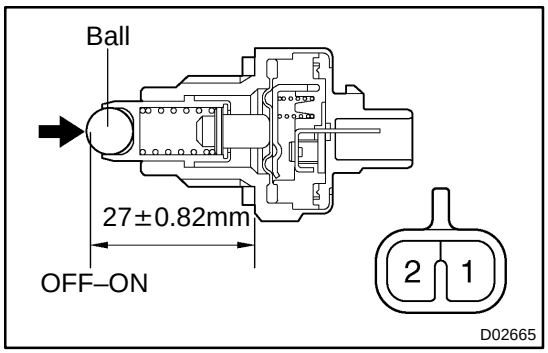

PREPARATION:

Remove the transfer L4 position switch (See page TR–7).

CHECK:

Check the continuity between the switch terminals when pushing the ball at the tip of the switch.

OK:

Switch ball	Specified condition
Push	Continuity
Free	No continuity

NG → **Replace transfer L4 position switch.**

OK

2	**Check harness and connector between ECM and transfer L4 position switch.**

NG → **Repair or replace harness or connector.**

OK

Replace ECM.

DTC	P2716	Pressure Control Solenoid ”D” Electrical

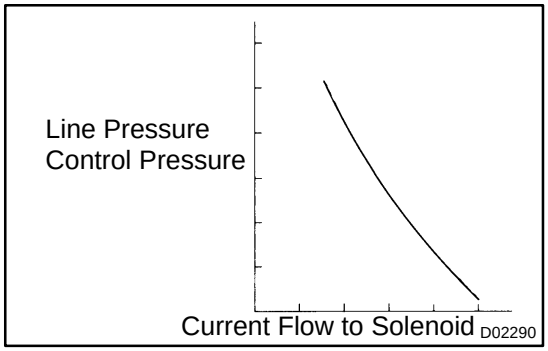

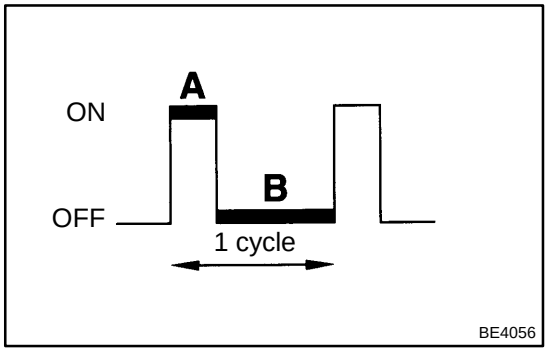

CIRCUIT DESCRIPTION

The throttle pressure that is applied to the primary regulator valve (which modulates line pressure) causes the solenoid valve SLT, under electric control, to precisely and minutely modulate and generate line pressure according to the accelerator pedal effort, or the detected engine power output.
This reduces the function of line pressure and provides smooth shifting characteristics.
Upon receiving the throttle valve opening angle signal, the ECM controls the line pressure by sending a predetermined (*) duty ratio to the solenoid valve, modulating the line pressure, and generating throttle pressure.
(*) Duty Ratio
The duty ratio is the ratio of the period of continuity in one cycle. For example, if A is the period of continuity in one cycle, and B is the period of non–continuity, then

$$\text{Duty Ratio} = \frac{A}{A + B} \times 100\ (\%)$$

DTC No.	DTC Detection Condition	Trouble Area
P2716	ECM detects solenoid SLT circuit malfunction for 1 sec. or more	▲Open or short in shift solenoid valve SLT circuit ▲Shift solenoid valve SLT ▲ECM

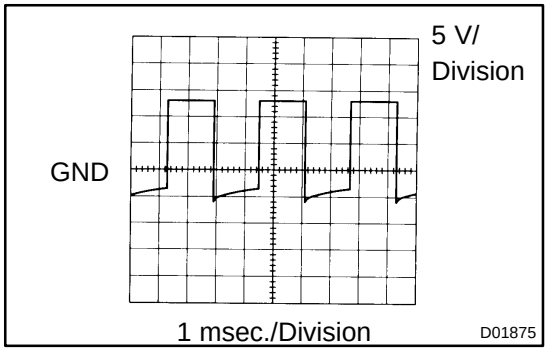

HINT:
The waveform between terminals SLT+ and SLT– while the engine is idling is shown on the left.

WIRING DIAGRAM

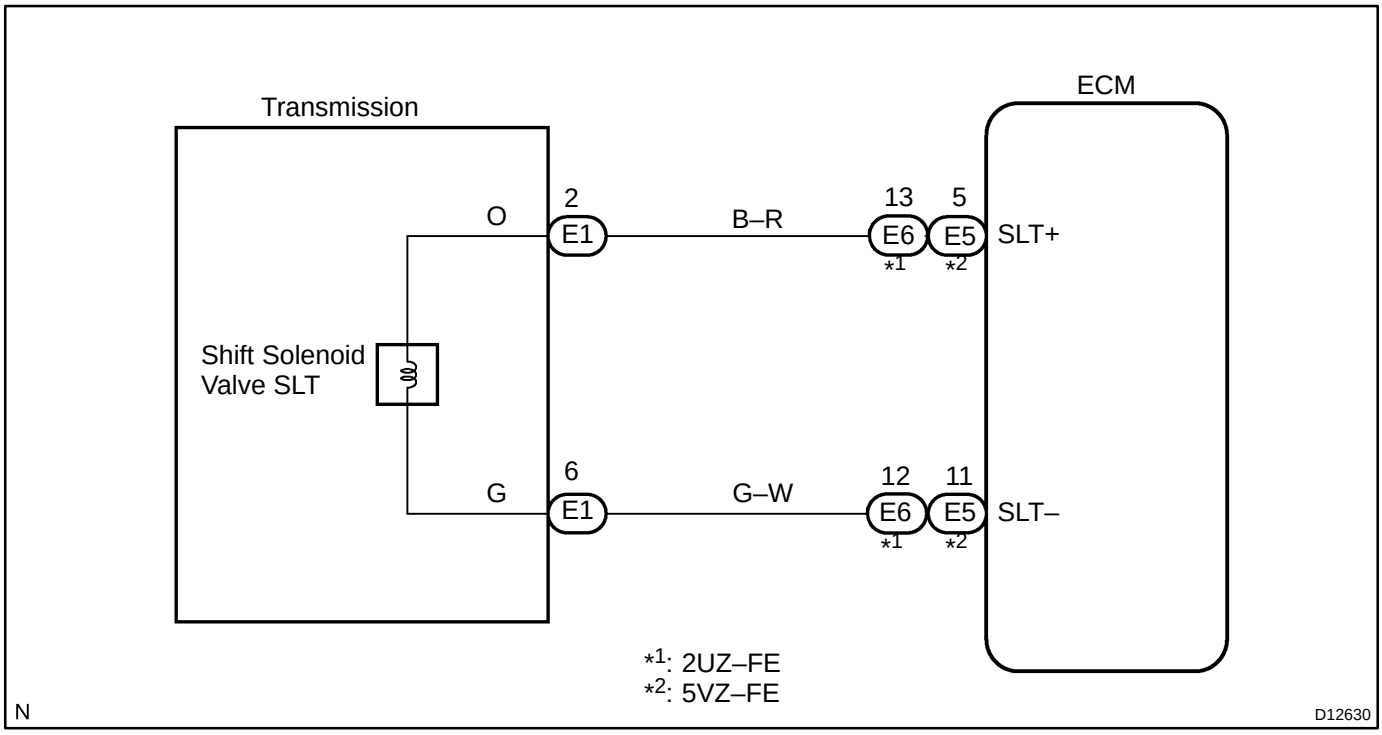

INSPECTION PROCEDURE

1	Check shift solenoid valve SLT.

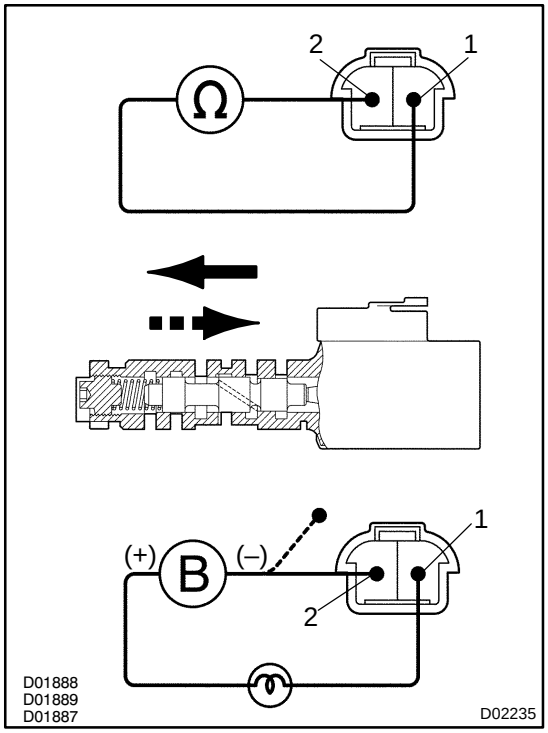

PREPARATION:

(a) Remove the oil pan.

(b) Disconnect the solenoid connector.

CHECK:

(a) Measure the resistance between terminals 1 and 2 of the solenoid connector.

Standard: 5.0 – 5.6 Ω at 20˚C (68˚F)

(b) Connect the positive (+) lead through an 8 – 10 W bulb to terminal 1 of the solenoid connector and negative (–) lead to terminal 2, then check the movement of the valve.

Standard:

When battery positive voltage is applied.	Valve moves in ◄ direction
When battery positive voltage is cut off.	Valve moves in ■■► direction

OK:

Standard.

NG → **Replace shift solenoid valve SLT.**

OK

2	Check harness and connector between shift solenoid valve SLT and ECM.

NG → **Repair or replace harness or connector.**

OK

Replace ECM.

DIA9F–01

O/D OFF Indicator Light Does Not Light Up

CIRCUIT DESCRIPTION

If the O/D main switch is pressed while the O/D OFF indicator is off, the O/D indicator will light up. If the O/D main switch is pressed while the O/D OFF indicator is on, the O/D indicator will go off (the ignition switch ON).

WIRING DIAGRAM

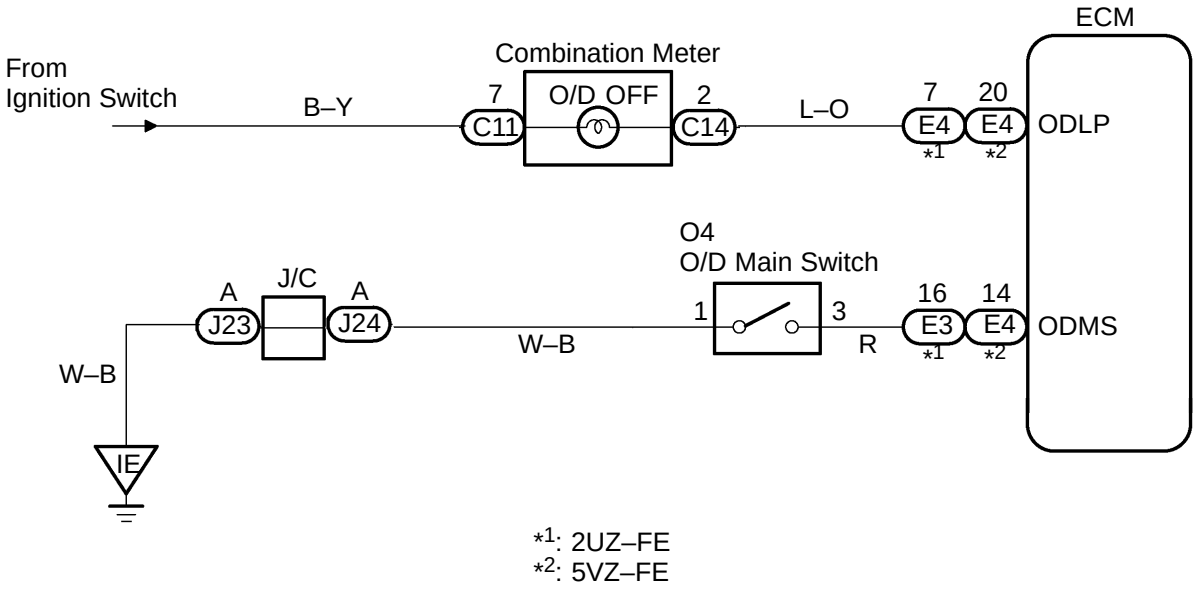

INSPECTION PROCEDURE

1	**Check ODMS Circuit.**

When using hand–held tester:

PREPARATION:

(a) Connect the hand–held tester to the DLC3.

(b) Turn the ignition switch ON.

CHECK:

Read the OVERDRV CUT SW2 signal on the hand–held tester.

Standard:

O/D main switch	Display
Pressed when O/D ON	OFF
Pressed when O/D OFF	ON

When not using hand–held tester:

PREPARATION:

(a) Disconnect the E4 ECM connector (5VZ–FE).

(b) Disconnect the E3 ECM connector (2UZ–FE).

CHECK:

Check the continuity between the ODMS terminal of the wire harness side ECM connector and the body ground.

Standard:

O/D main switch	Specified Condition
Pressed when O/D ON	Continuity
Pressed when O/D OFF	No continuity

OK:

Standard.

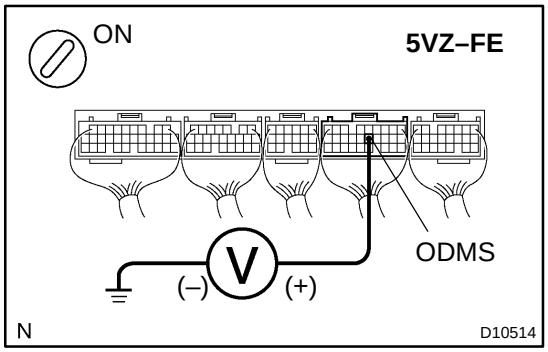

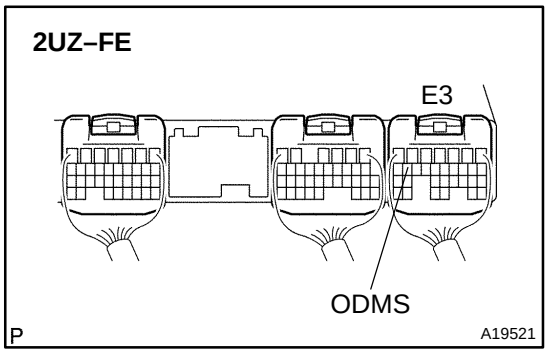

NG → **Go to step 3.**

OK

2	Check ODLP circuit.

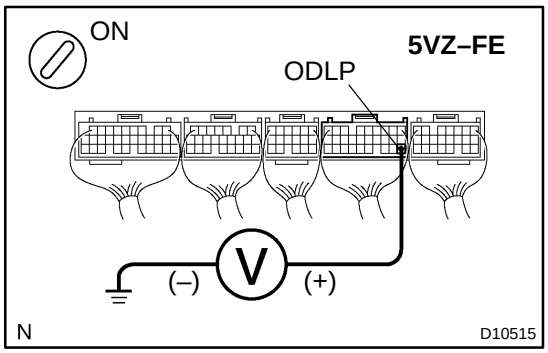

PREPARATION:

(a) Disconnect the E4 ECM connector.

(b) Using a jumper wire, connect the ODLP terminal of the wire harness side ECM connector to the body ground.

CHECK:

Check that the O/D OFF indicator light lights up when turning the ignition switch ON.

OK:

The O/D indicator light lights up.

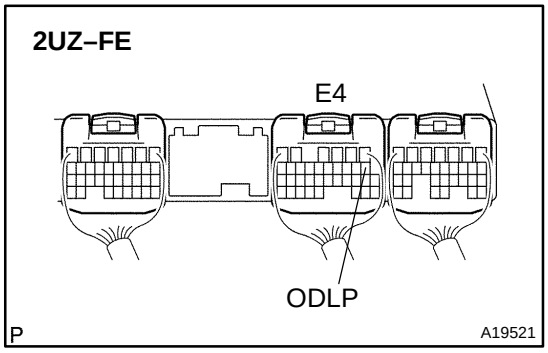

NG → **Go to step 5.**

OK

Replace ECM.

3	Check O/D main switch.

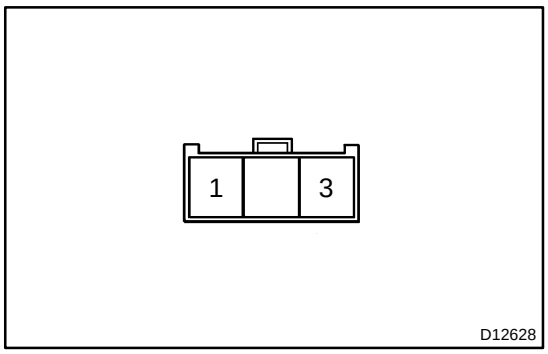

PREPARATION:

Disconnect the O/D main switch connector.

CHECK:

Check the continuity between the O/D main switch connector terminals 1 and 3.

Standard:

O/D main switch	Specified Condition
Pressed when ON position	Continuity
Pressed when OFF position	No continuity

OK:

Standard

NG → **Replace O/D main switch.**

OK

4	Check harness and connector between ECM and O/D main switch.

NG → Repair or replace harness and connector between ECM and O/D main switch.

OK →

Repair or replace harness and connector between O/D main Switch and Body ground.

5	Check harness and connector.

NG → Repair or replace harness and connector between ECM and combination meter.

OK →

6	Check O/D Indicator Light Valve.

NG → Replace combination meter.

OK →

Replace valve.

O/D OFF Indicator Light Remains ON

CIRCUIT DESCRIPTION

See page (DI–440).

WIRING DIAGRAM

See page (DI–440).

INSPECTION PROCEDURE

1	**Check ODMS Circuit.**

When using hand–held tester:

PREPARATION:

(a) Connect the hand–held tester to the DLC3.

(b) Turn the ignition switch ON.

CHECK:

Read the OVERDRV CUT SW2 signal on the hand–held tester.

Standard:

O/D main switch	Display
Pressed when O/D ON	OFF
Pressed when O/D OFF	ON

When not using hand–held tester:

PREPARATION:

(a) Disconnect the E4 ECM connector (5VZ–FE).

(b) Disconnect the E3 ECM connector (2UZ–FE).

CHECK:

Check the continuity between the ODMS terminal of the wire harness side ECM connector and the body ground.

Standard:

O/D main switch	Specified Condition
Pressed when O/D ON	Continuity
Pressed when O/D OFF	No continuity

OK:

Standard

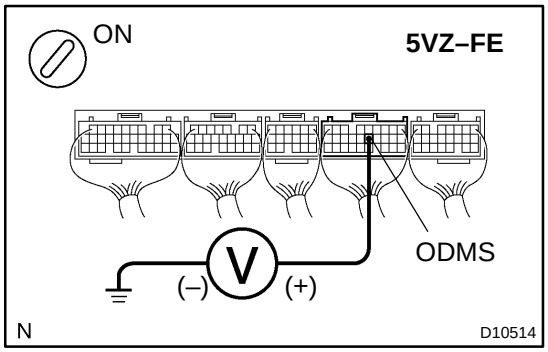

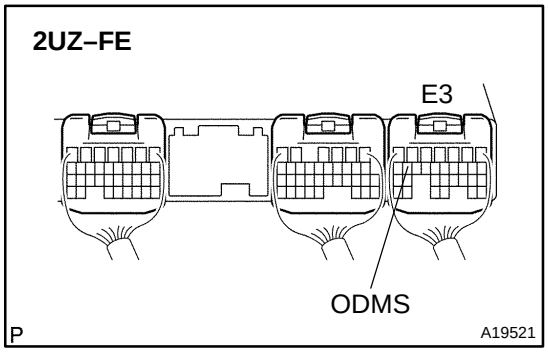

NG

OK → **Replace ECM.**

2	Check O/D main switch.

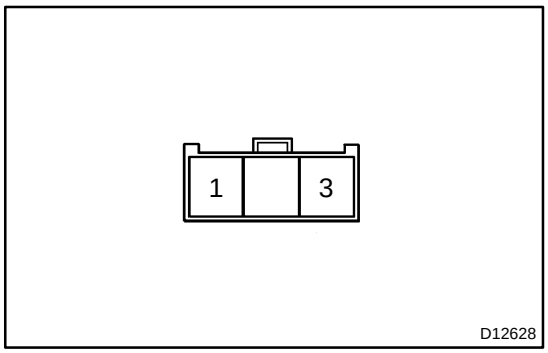

PREPARATION:

Disconnect the O/D main switch connector.

CHECK:

Check the continuity between the O/D main switch connector terminals 1 and 3.

Standard:

O/D main switch	Specified Condition
Pressed when ON position	Continuity
Pressed when OFF position	No continuity

OK:

Standard

NG → **Replace O/D main switch.**

OK →

Repair or replace harness and connector between ECM and O/D main switch.

SUPPLEMENTAL RESTRAINT SYSTEM

DI1AX–10

HOW TO PROCEED WITH TROUBLESHOOTING

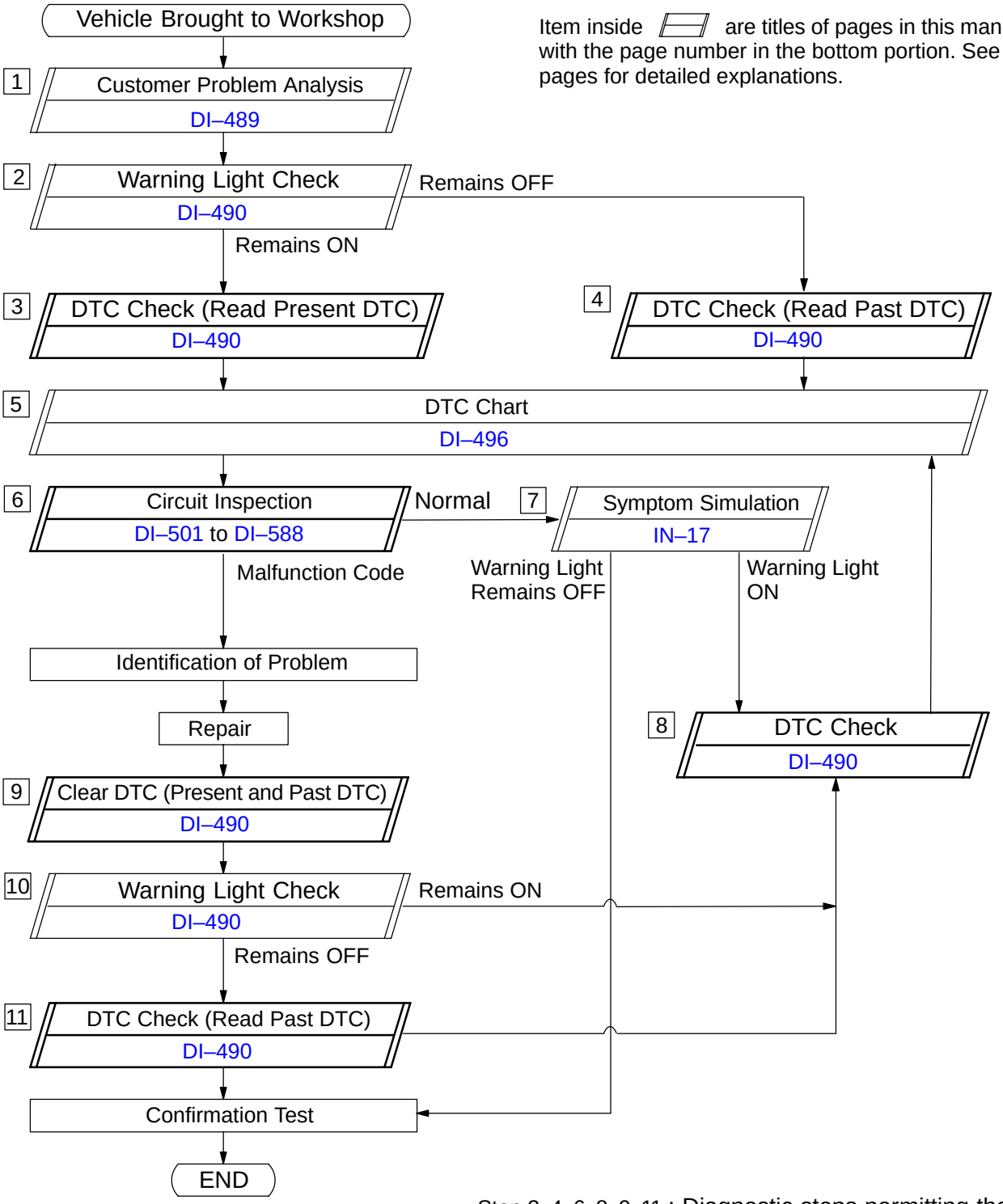

Step 3, 4, 6, 8, 9, 11 : Diagnostic steps permitting the use of the TOYOTA hand–held tester.

DI15Z–07

CUSTOMER PROBLEM ANALYSIS CHECK

Supplemental Restraint System Check Sheet

Inspector's Name _____

Customer's Name		**Registration No.**	
		Registration Year	/ /
		Frame No.	
Date Vehicle Brought In	/ /	**Odometer Reading**	**km Miles**

Date Problem Occurred	/ /
Weather	☐ Fine ☐ Cloudy ☐ Rainy ☐ Snowy ☐ Other
Temperature	**Approx.**

Vehicle Operation	☐ Starting ☐ Idling ☐ Driving [☐ Constant speed ☐ Acceleration ☐ Deceleration ☐ Other]
Road Conditions	
Details Of Problem	

Vehicle Inspection, Repair History Prior to Occurrence of Malfunction (Including Supplemental Restraint System)	

Diagnosis System Inspection

SRS Warning Light Inspection	**1st Time**	☐ Remains ON ☐ Sometimes Light Up ☐ Does Not Light Up
	2nd Time	☐ Remains ON ☐ Sometimes Light Up ☐ Does Not Light Up
DTC Inspection	**1st Time**	☐ Normal Code ☐ Malfunction Code [Code.]
	2nd Time	☐ Normal Code ☐ Malfunction Code [Code.]

DI4L1–13

PRE–CHECK

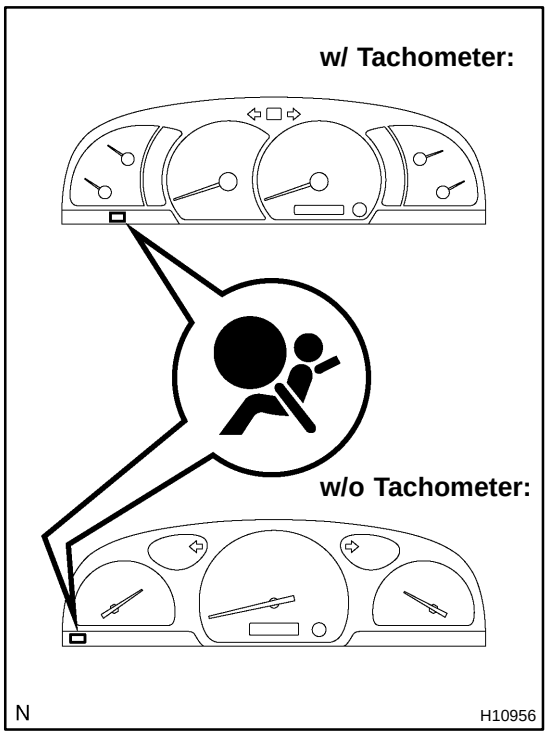

1. SRS WARNING LIGHT CHECK

(a) Turn the ignition switch to the ACC or ON position and check that the SRS warning light lights up.

(b) Check that the SRS warning light goes out after approx. 6 seconds.

HINT:

▲ When the ignition switch is at ACC or ON and the SRS warning light remains on or flashes, the airbag sensor assembly has detected a malfunction code.

▲ If, after approx. 6 seconds have elapsed, the SRS warning light sometimes lights up or the SRS warning light lights up even when the ignition switch is OFF, a short in the SRS warning light circuit can be considered likely. Proceed to "SRS warning light circuit malfunction" on page DI–583.

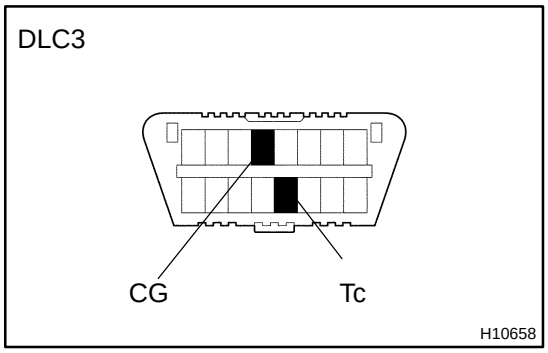

2. DTC CHECK (Using diagnosis check wire)

(a) Present troubles codes:

Output the DTC.

(1) Turn the ignition switch to the ON position and wait for approx. 20 seconds.

(2) Using SST, connect terminals Tc and CG of the DLC3.

SST 09843–18020

NOTICE:

Pay due attention to the terminal connecting position to avoid a malfunction.

(b) Past troubles codes:

Output the DTC.

(1) Using service wire, connect terminals Tc and CG of the DLC3.

SST 09843–18020

(2) Turn the ignition switch to the ON position and wait for approx. 20 seconds.

NOTICE:

Pay due attention to the terminal connecting position to avoid a malfunction.

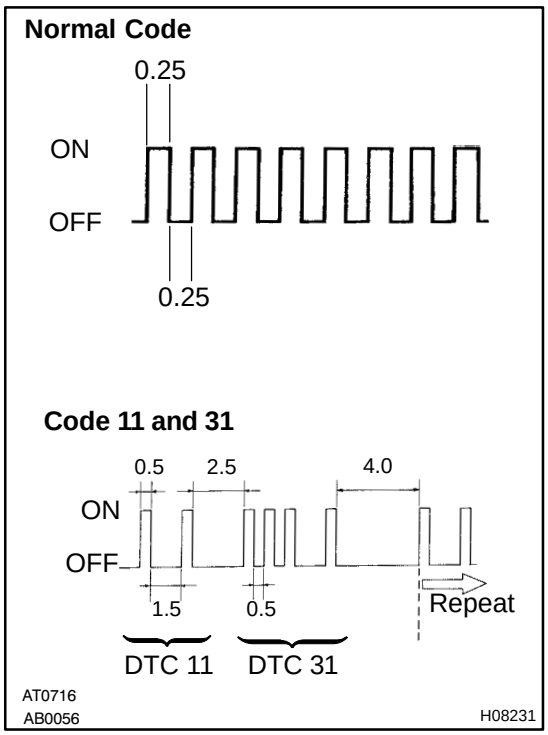

(c) Read the DTC.
Read the 2–digit DTC as indicated by the number of times the SRS warning light blinks. As an example, the blinking patterns, normal, 11 and 31 are shown in the illustration.

- ▲ Normal code indication
  The light will blink 2 times per second.
- ▲ Malfunction code indication
  The first blinking output indicates the first digit of a 2–digit DTC. After a 1.5–second pause, the second blinking output will indicate the second digit.

If there are 2 or more codes, there will be a 2.5–second pause between each code. After all the codes have been output, there will be a 4.0–second pause and they will all be repeated.
HINT:

- ▲ In the event of a number of trouble codes, indication will start from the smallest numbered code.
- ▲ If a DTC is not output or a DTC is output without terminal connection, proceed to the Tc terminal circuit inspection on page DI–588.

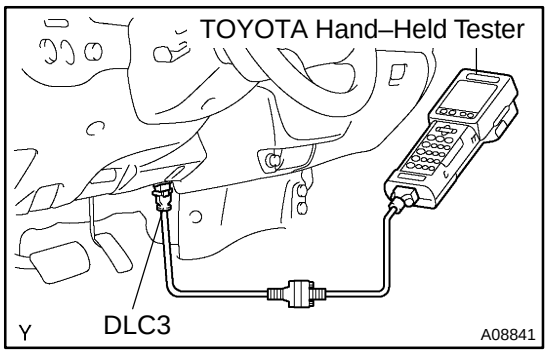

3. DTC CHECK (Using hand–held tester)

(a) Hook up the TOYOTA hand–held tester to the DLC3.
(b) Read the DTCs by following the prompts on the tester screen.

HINT:
Please refer to the TOYOTA hand–held tester operator's manual for further details.

4. DTC CLEARANCE (Not using service wire)

When the ignition switch is turned off, the diagnostic trouble code is cleared.
HINT:
DTC might not be cleared by turning the ignition switch OFF. In this case, proceed to the next step.

5. DTC CLEARANCE (Using service wire)

(a) Connect the 2 service wires to terminals Tc and AB of DLC1.
(b) Turn the ignition switch to ACC or ON and wait for approx. 6 seconds.

(c) Starting with the Tc terminal, ground alternately terminal Tc and terminal AB twice each in cycles of 1.0 second. Make sure that the terminals are grounded. Ensure the terminal Tc remain grounded.

HINT:

When alternately grounding terminals Tc and AB, release ground from one terminal and immediately ground the other terminal within an interval of 0.2 seconds.

If DTCs are not cleared, repeat the above procedure until the codes are cleared.

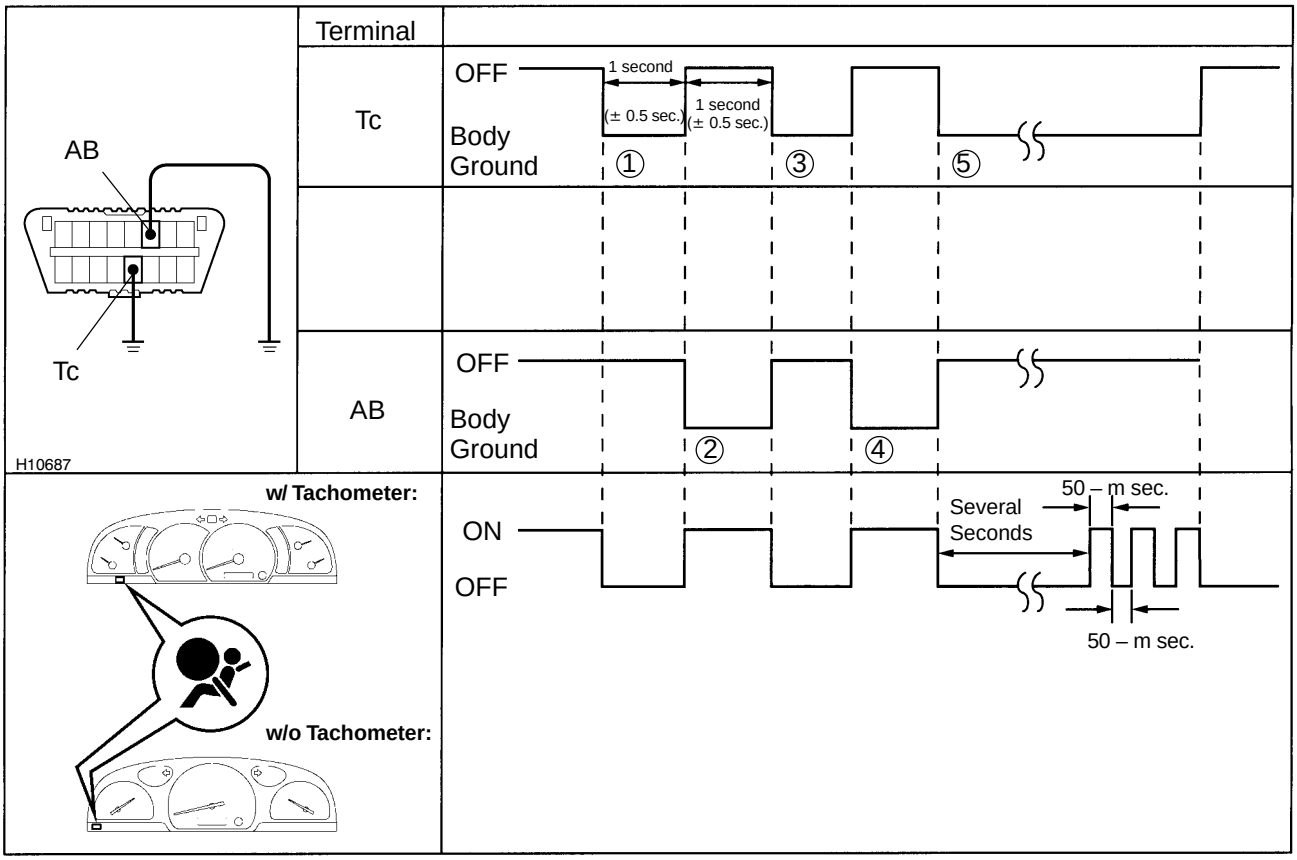

H17629

(d) Several seconds after doing the clearing procedure, the SRS warning light will blink in a 50 – m sec. cycle to indicate the codes which have been cleared.

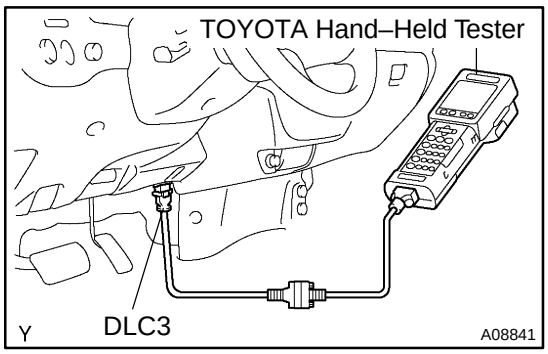

6. DTC CLEARANCE (Using TOYOTA hand–held tester)

(a) Hook up the TOYOTA hand–held tester to the DLC3.

(b) Clear the DTCs by following the prompts on the tester screen.

HINT:

Please refer to the TOYOTA hand–held tester operation's manual for further details.

7. RELEASE METHOD OF AIRBAG ACTIVATION PREVENTION MECHANISM

An airbag activation prevention mechanism is built into the connector for the squib circuit of the SRS.

When release of the airbag activation prevention mechanism is directed in the troubleshooting procedure, as shown in the illustration of the connectors on the next pages, insert paper which has the same thickness as the male terminal, between the terminal and the short spring.

CAUTION:

Never release the airbag activation prevention mechanism on the steering wheel pad connector.

NOTICE:

- **Do not release the airbag activation prevention mechanism unless specifically directed by the troubleshooting procedure.**
- **If the inserted paper is too thick the terminal and short spring may be damaged, so always use paper with the same thickness as the male terminal.**

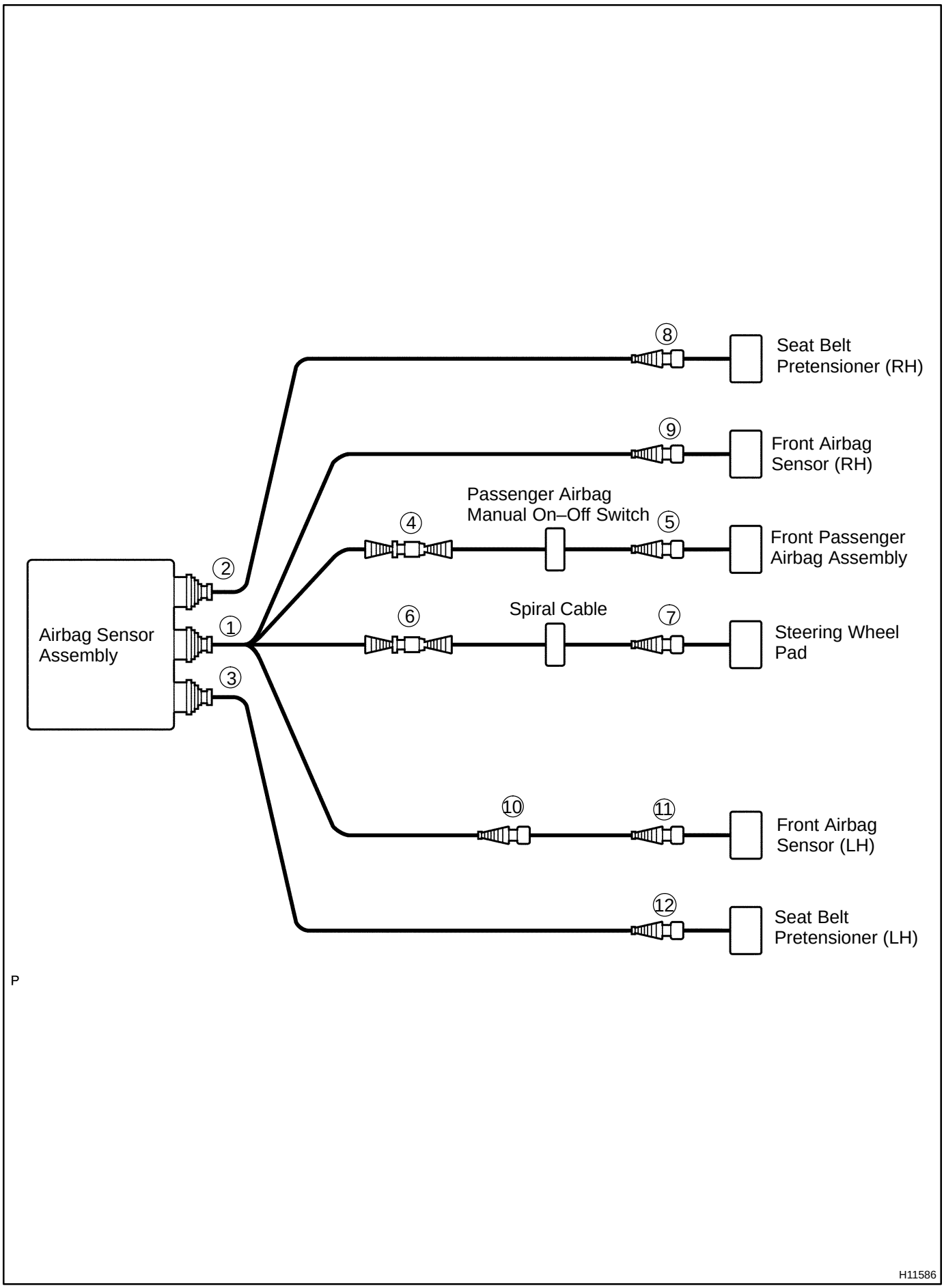
Airbag Sensor Assembly
1
2
3
4
5
6
7
8
9
10
11
12
Seat Belt Pretensioner (RH)
Front Airbag Sensor (RH)
Passenger Airbag Manual On–Off Switch
Front Passenger Airbag Assembly
Spiral Cable
Steering Wheel Pad
Front Airbag Sensor (LH)
Seat Belt Pretensioner (LH)
P
H11586

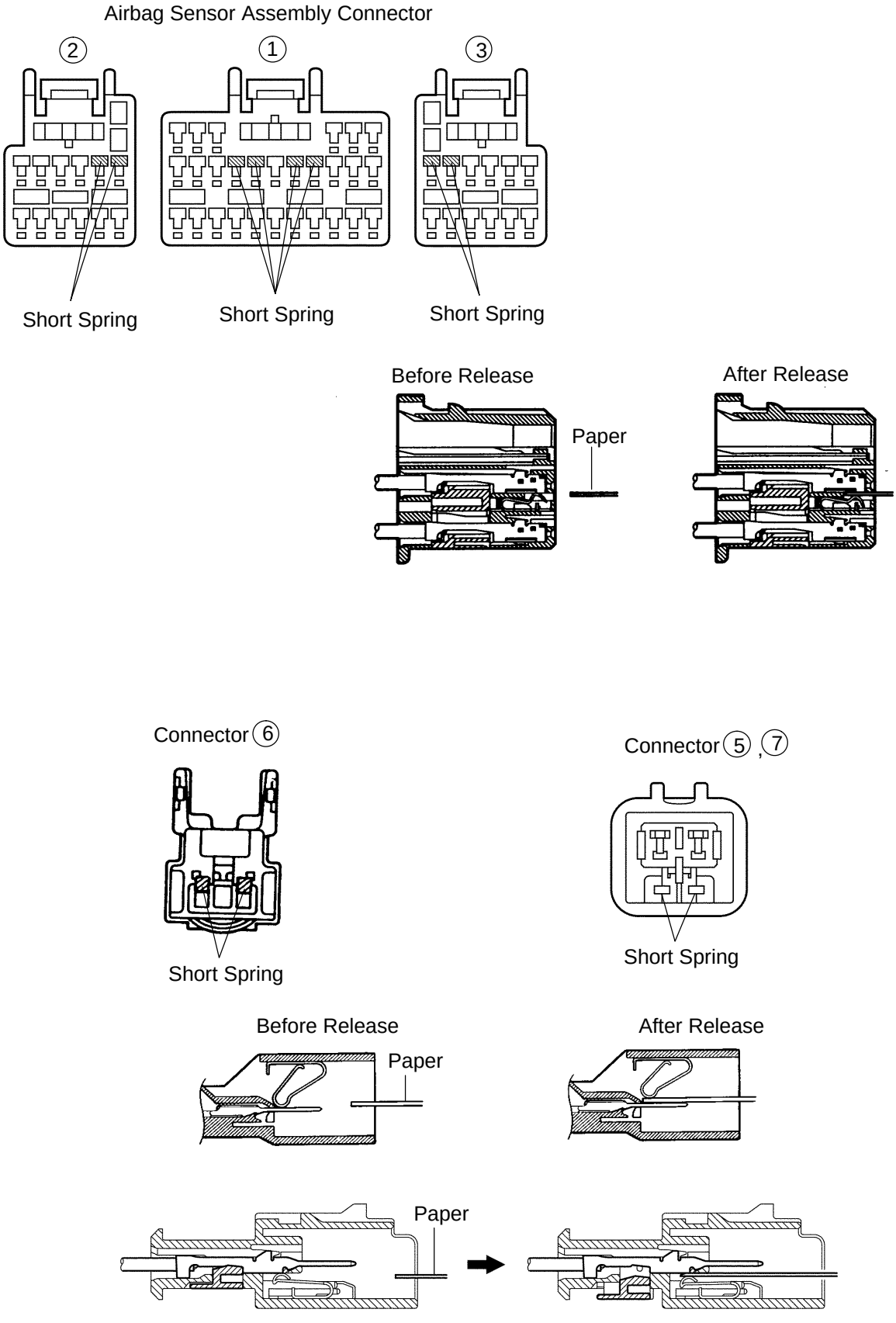

H01356
H01233
AB0130 H02248
AB0045 AB0046
H02249

H11587

DI1AZ–10

DIAGNOSTIC TROUBLE CODE CHART

If a malfunction code is displayed during the DTC check, check the circuit listed for that code in the table below (Proceed to the page given for that circuit.).

DTC No. (See Page)	Detection Item	Trouble Area	SRS Warning Light
B0100/13 (DI–501)	▲Short in D squib circuit	▲Steering wheel pad (squib) ▲Spiral cable ▲Airbag sensor assembly ▲Wire harness	ON
B0101/14 (DI–506)	▲Open in D squib circuit	▲Steering wheel pad (squib) ▲Spiral cable ▲Airbag sensor assembly ▲Wire harness	ON
B0102/11 (DI–510)	▲Short in D squib circuit (to Ground)	▲Steering wheel pad (squib) ▲Spiral cable ▲Airbag sensor assembly ▲Wire harness	ON
B0103/12 (DI–514)	▲Short in D squib circuit (to B+)	▲Steering wheel pad (squib) ▲Spiral cable ▲Airbag sensor assembly ▲Wire harness	ON
B0105/53 (DI–518)	▲Short in P squib circuit	▲Front passenger airbag assembly (squib) ▲Passenger airbag manual ON–OFF switch ▲Airbag sensor assembly ▲Wire harness	ON
B0106/54 (DI–524)	▲Open in P squib circuit	▲Front passenger airbag assembly (squib) ▲Passenger airbag manual ON–OFF switch ▲Airbag sensor assembly ▲Wire harness	ON
B0107/51 (DI–529)	▲Short in P squib circuit (to Ground)	▲Front passenger airbag assembly (squib) ▲Passenger airbag manual ON–OFF switch ▲Airbag sensor assembly ▲Wire harness	ON
B0108/52 (DI–534)	▲Short in P squib circuit (to B+)	▲Front passenger airbag assembly (squib) ▲Passenger airbag manual ON–OFF switch ▲Airbag sensor assembly ▲Wire harness	ON
B0130/63 (DI–539)	▲Short in P/T squib (RH) circuit	▲Seat belt pretensioner RH (squib) ▲Airbag sensor assembly ▲Wire harness	Blink
B0131/64 (DI–543)	▲Open in P/T squib (RH) circuit	▲Seat belt pretensioner RH (squib) ▲Airbag sensor assembly ▲Wire harness	Blink
B0132/61 (DI–546)	▲Short in P/T squib (RH) circuit (to Ground)	▲Seat belt pretensioner RH (squib) ▲Airbag sensor assembly ▲Wire harness	Blink
B0133/62 (DI–549)	▲Short in P/T squib (RH) circuit (to B+)	▲Seat belt pretensioner RH (squib) ▲Airbag sensor assembly ▲Wire harness	Blink
B0135/73 (DI–552)	▲Short in P/T squib (LH) circuit	▲Seat belt pretensioner LH (squib) ▲Airbag sensor assembly ▲Wire harness	Blink

DTC No. (See Page)	Detection Item	Trouble Area	SRS Warning Light
B0136/74 (DI–556)	▲Open in P/T squib (LH) circuit	▲Seat belt pretensioner LH (squib) ▲Airbag sensor assembly ▲Wire harness	Blink
B0137/71 (DI–559)	▲Short in P/T squib (LH) circuit (to Ground)	▲Seat belt pretensioner LH (squib) ▲Airbag sensor assembly ▲Wire harness	Blink
B0138/72 (DI–562)	▲Short in P/T squib (LH) circuit (to B+)	▲Seat belt pretensioner LH (squib) ▲Airbag sensor assembly ▲Wire harness	Blink
B1100/31 (DI–565)	▲Airbag sensor assembly malfunction	▲Airbag sensor assembly	ON
B1156/B1157/15 (DI–567)	▲Front airbag sensor (RH) malfunction	▲Front airbag sensor (RH) ▲Airbag sensor assembly ▲Wire harness	ON
B1158/B1159/16 (DI–572)	▲Front airbag sensor (LH) malfunction	▲Front airbag sensor (LH) ▲Airbag sensor assembly ▲Wire harness ▲Engine room main wire harness	ON
Normal (DI–580)	▲System normal	–	OFF
	▲Voltage source drop	▲Battery ▲Airbag sensor assembly	ON

HINT:

- ▲ When the SRS warning light remains lit up and the DTC is the normal code, this means a voltage source drops.
  This malfunction is not stored in memory by the airbag sensor assembly and if the power source voltage returns to normal, the SRS warning light will automatically go out.
- ▲ When 2 or more codes are indicated, the codes will be displayed in numeral order starting from the lowest numbered code.
- ▲ If a code not listed on the chart is displayed, the airbag sensor assembly is faulty.

DI1B0–18

PARTS LOCATION

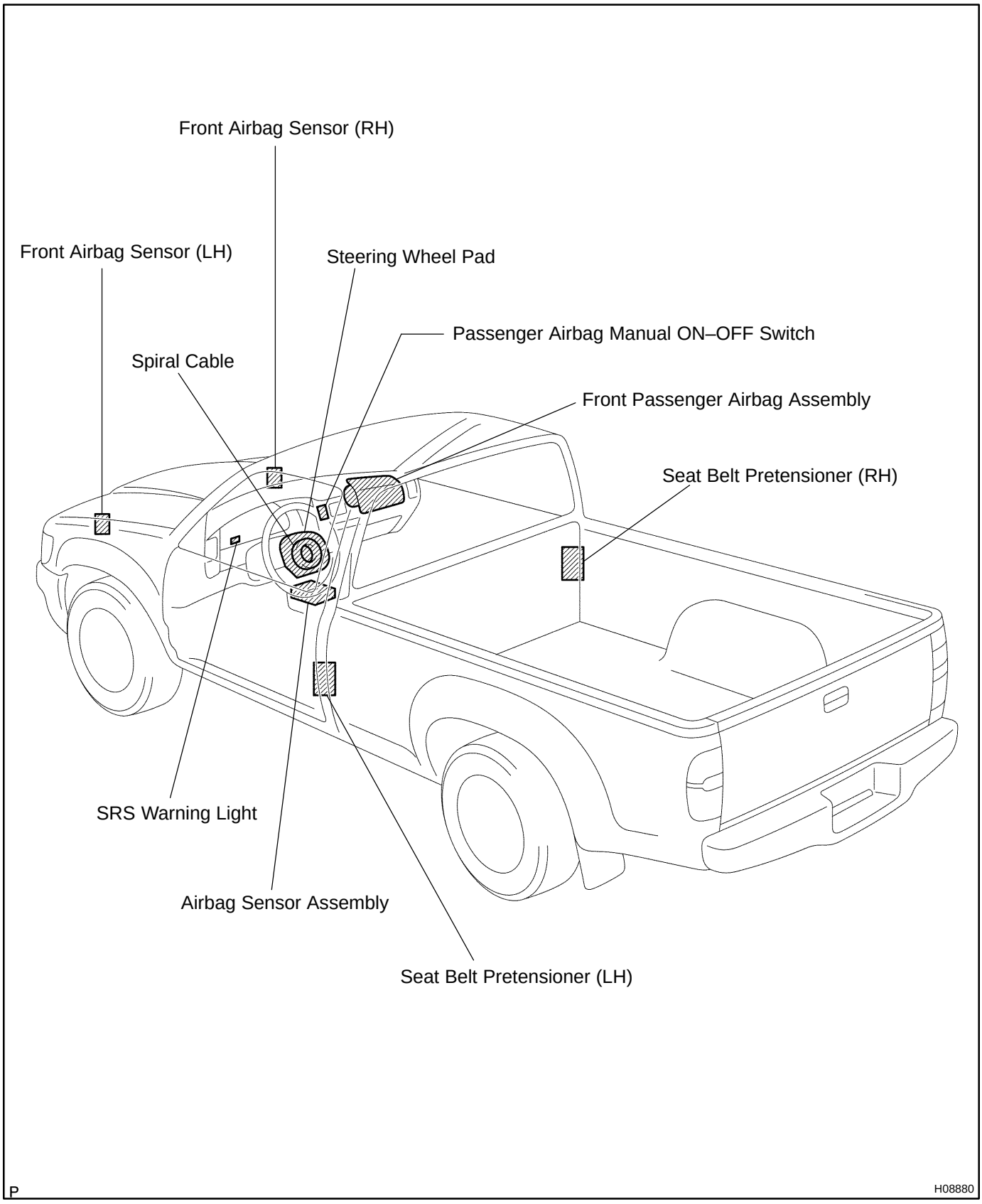

DI1B1–33

TERMINALS OF ECU

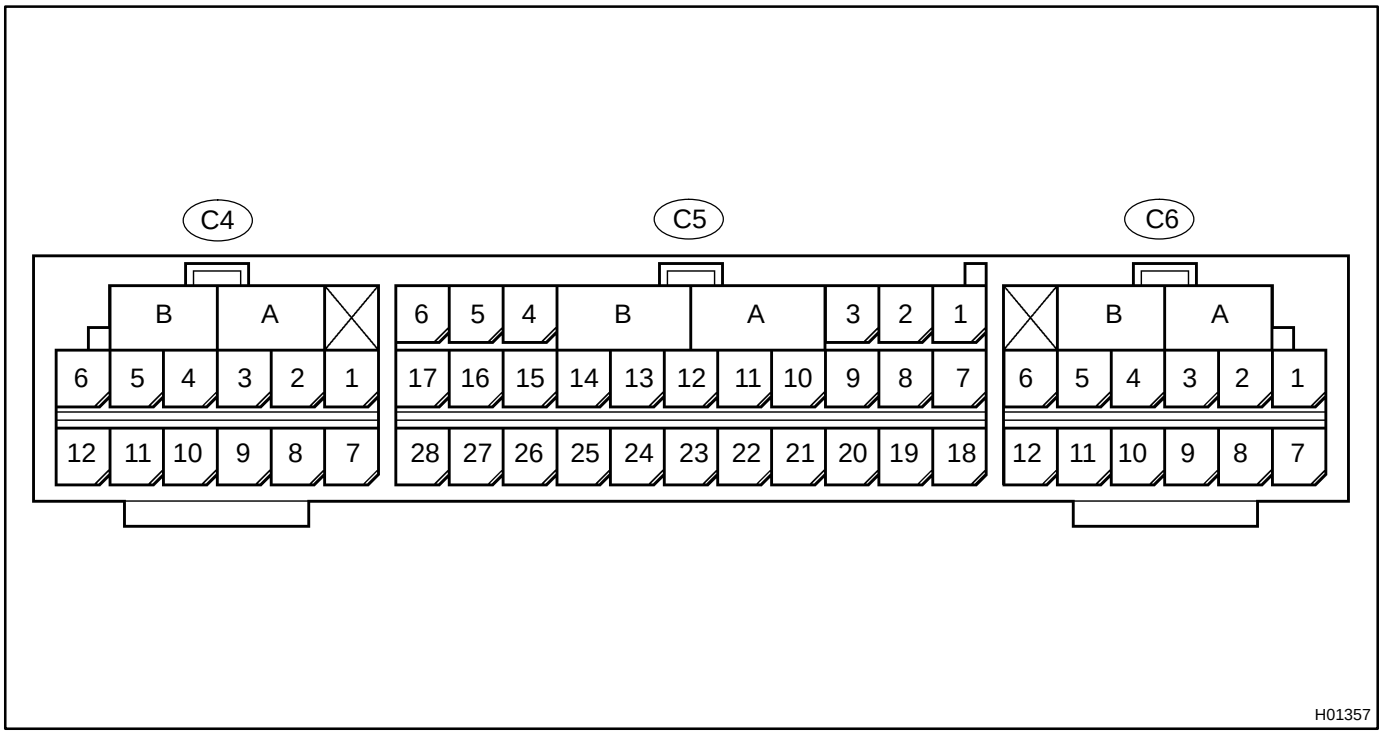

No.	Symbol	Terminal Name
A	–	Electrical Connector Check Mechanism
B	–	Electrical Connector Check Mechanism
C4 – 1	PL–	Squib (Seat Belt Pretensioner, LH)
C4 – 2	PL+	Squib (Seat Belt Pretensioner, LH)
C5 – 3	LA	SRS Warning Light
C5 – 5	IG2	Power Source (IGN Fuse)
C5 – 9	SR+	Front Airbag Sensor (RH)
C5 – 10	P+	Squib (Passenger)
C5 – 11	P–	Squib (Passenger)
C5 – 12	SIL	Diagnosis
C5 – 13	D–	Squib (Driver)
C5 – 14	D+	Squib (Driver)
C5 – 15	SL+	Front Airbag Sensor (LH)
C5 – 19	Tc	Diagnosis
C5 – 20	SR–	Front Airbag Sensor (RH)
C5 – 26	SL–	Front Airbag Sensor (LH)
C5 – 27	E1	Ground
C5 – 28	E2	Ground
C6 – 5	PR+	Squib (Pretensioner, RH)
C6 – 6	PR–	Squib (Pretensioner, RH)

DI164–21

PROBLEM SYMPTOMS TABLE

Proceed with troubleshooting of each circuit in the table below.

Symptom	Suspect Area	See page
▲With the ignition switch in ACC or ON position, the SRS warning light sometimes lights up after approx. 6 seconds have elapsed.	▲SRS warning light circuit	DI–583
▲SRS warning light is always lit up even when ignition switch is in the LOCK position.		
▲With the ignition switch in ACC or ON position, the SRS warning light does not light up.		
▲DTC is not displayed.	▲Tc terminal circuit	DI–588
▲SRS warning light is always lit up at the time of DTC check procedure.		
▲DTC is displayed without Tc and E1 terminal connection.		

DI18Q–33

CIRCUIT INSPECTION

DTC	B0100/13	Short in D Squib Circuit

CIRCUIT DESCRIPTION

The D squib circuit consists of the airbag sensor assembly, spiral cable and steering wheel pad.
It causes the airbag to deploy when the airbag deployment conditions are satisfied.
For details of the function of each component, see OPERATION on page RS–2.
DTC B0100/13 is recorded when a short is detected in the D squib circuit.

DTC No.	DTC Detecting Condition	Trouble Area
B0100/13	▲Short circuit between D+ wire harness and D– wire harness of squib ▲D squib malfunction ▲Spiral cable malfunction ▲Airbag sensor assembly malfunction	▲Steering wheel pad (D squib) ▲Spiral cable ▲Airbag sensor assembly ▲Wire harness

WIRING DIAGRAM

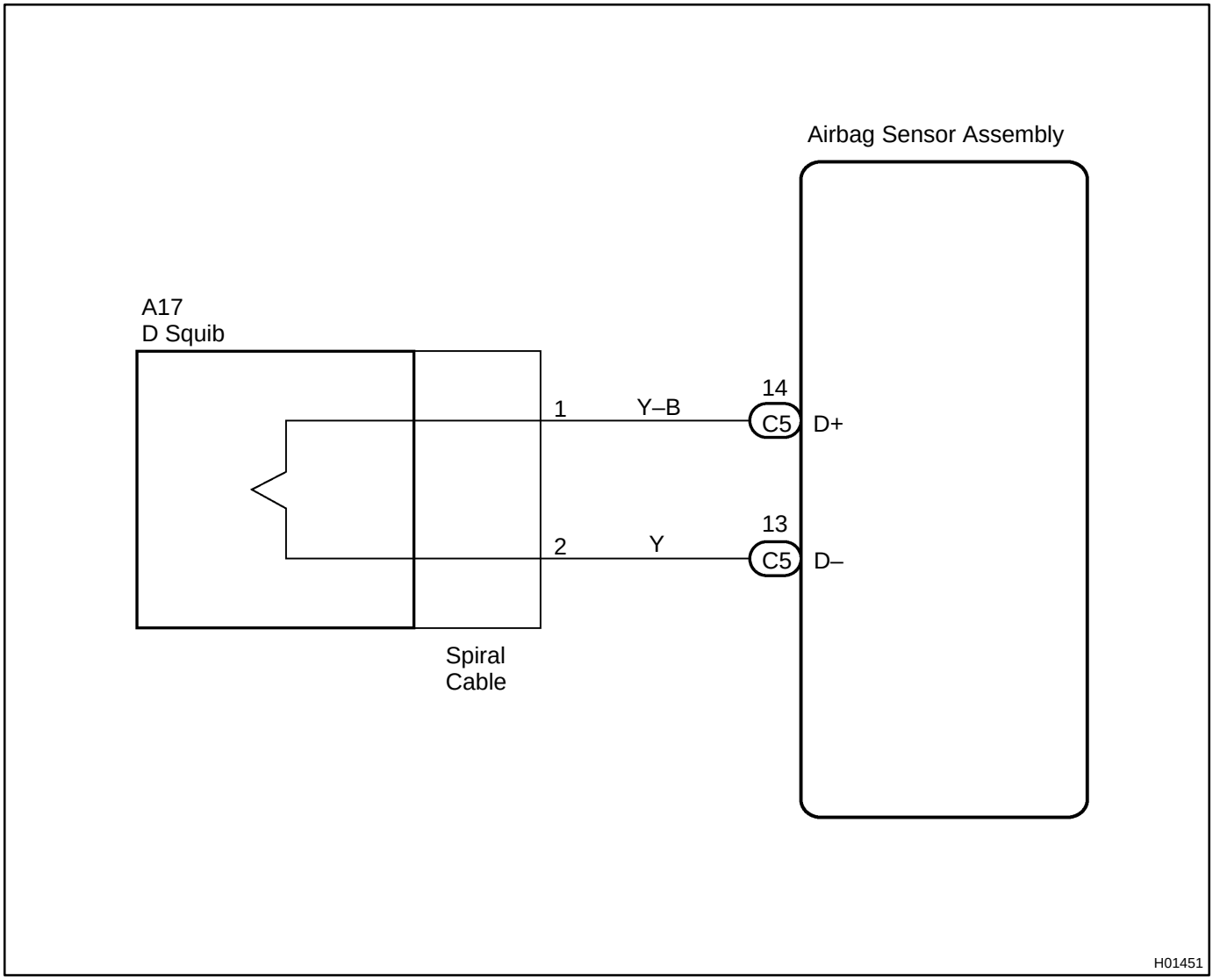

INSPECTION PROCEDURE

1	**Prepare for inspection (See step 1 on page DI–580).**

2	**Check D squib circuit.**

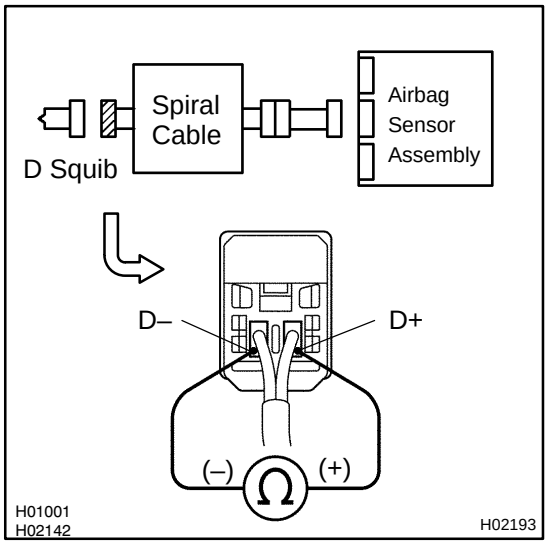

PREPARATION:
Release the airbag activation prevention mechanism of the connector (on the airbag sensor assembly side) between the airbag sensor assembly and the spiral cable
(See page DI–490).

CHECK:
For the connector (on the spiral cable side) between the spiral cable and the steering wheel pad, measure the resistance between D+ and D–.

OK:

Resistance: 1 MΩ or Higher

NG → **Go to step 5.**

OK

3	Check airbag sensor assembly.

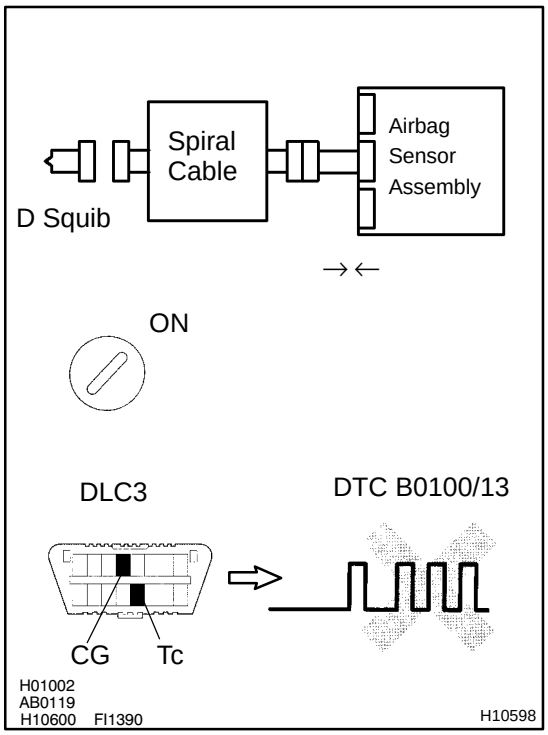

PREPARATION:

(a) Connect the connector to the airbag sensor assembly.
(b) Connect negative (–) terminal cable to the battery, and wait at least for 2 seconds.

CHECK:

(a) Turn ignition switch to ON and wait at least for 20 seconds.
(b) Clear DTC stored in memory (See page DI–490).
(c) Turn ignition switch to LOCK, and wait at least for 20 seconds.
(d) Turn ignition switch to ON, and wait at least for 20 seconds.
(e) Check DTC (See page DI–490).

OK:

DTC B0100/13 is not output.

HINT:

Codes other than code B0100/13 may be output at this time, but they are not relevant to this check.

NG → **Replace airbag sensor assembly.**

OK

4	Check D squib.

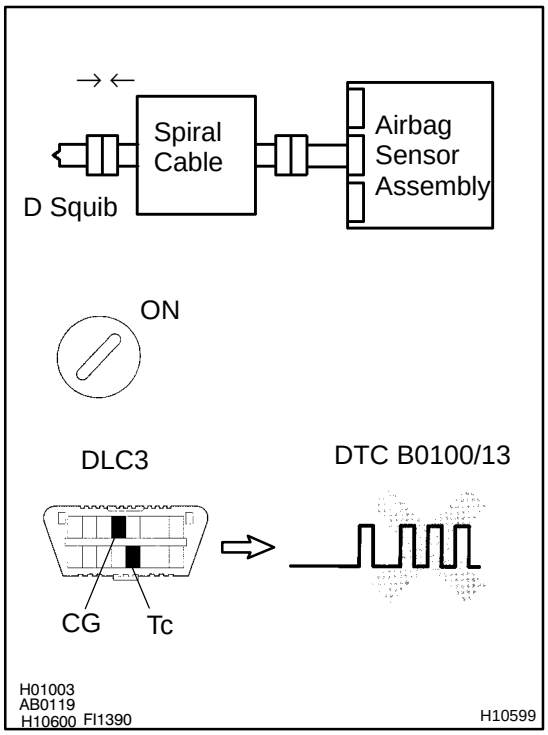

PREPARATION:

(a) Turn ignition switch to LOCK.
(b) Disconnect negative (–) terminal cable from the battery, and wait at least for 90 seconds.
(c) Connect the steering wheel pad connector.
(d) Connect negative (–) terminal cable to the battery, and wait at least for 2 seconds.

CHECK:

(a) Turn ignition switch to LOCK, and wait at least for 20 seconds.
(b) Turn ignition switch to ON, and wait at least for 20 seconds.
(c) Clear DTC stored in memory (See page DI–490).
(d) Turn ignition switch to LOCK, and wait at least for 20 seconds.
(e) Turn ignition switch to ON, and wait at least for 20 seconds.
(f) Check DTC (See page DI–490).

OK:

DTC B0100/13 is not output.

HINT:

Codes other than code B0100/13 may be output at this time, but they are not relevant to this check.

NG → **Replace steering wheel pad.**

OK →

From the results of the above inspection, the malfunctioning part can now be considered normal. To make sure of this, use the simulation method to check.

5	Check spiral cable.

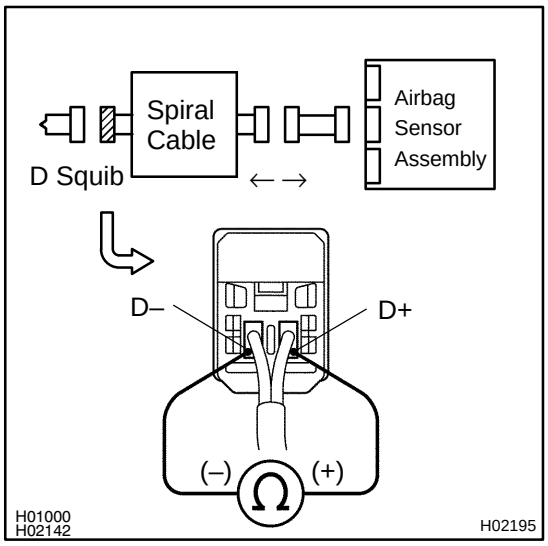

PREPARATION:

(a) Disconnect the connector between the airbag sensor assembly and the spiral cable.

(b) Release the airbag activation prevention mechanism of the spiral cable connector on the airbag sensor assembly side (See page DI–490).

CHECK:

For the connector (on the spiral cable side) between the spiral cable and the steering wheel pad, measure the resistance between D+ and D–.

OK:

Resistance: 1 MΩ or Higher

NG → **Repair or replace spiral cable.**

OK

6	Check harness between airbag sensor assembly and spiral cable.

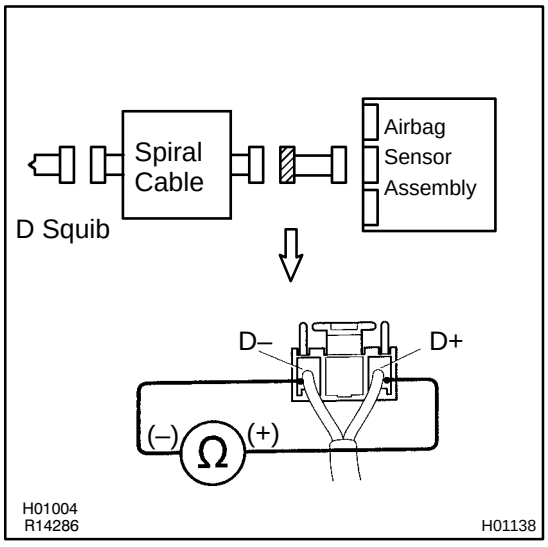

PREPARATION:

Release the airbag activation prevention mechanism of the connector (on the airbag sensor assembly side) between the airbag sensor assembly and the spiral cable (See page DI–490).

CHECK:

For the connector (on the spiral cable side) between the airbag sensor assembly and the spiral cable, measure the resistance between D+ and D–.

OK:

Resistance: 1 MΩ or Higher

NG → **Repair or replace harness or connector between airbag sensor assembly and spiral cable.**

OK

From the results of the above inspection, the malfunctioning part can now be considered normal. To make sure of this, use the simulation method to check.

DI18R–37

DTC	B0101/14	Open in D Squib Circuit

CIRCUIT DESCRIPTION

The D squib circuit consists of the airbag sensor assembly, spiral cable and steering wheel pad.
It causes the airbag to deploy when the airbag deployment conditions are satisfied.
For details of the function of each component, see OPERATION on page RS–2.
DTC B0101/14 is recorded when an open is detected in the D squib circuit.

DTC No.	DTC Detecting Condition	Trouble Area
B0101/14	▲Open circuit in D+ wire harness or D– wire harness of squib ▲D squib malfunction ▲Spiral cable malfunction ▲Airbag sensor assembly malfunction	▲Steering wheel pad (D squib) ▲Spiral cable ▲Airbag sensor assembly ▲Wire harness

WIRING DIAGRAM

See page DI–501.

INSPECTION PROCEDURE

1	Prepare for inspection (See step 1 on page DI–580).

2	Check D squib circuit.

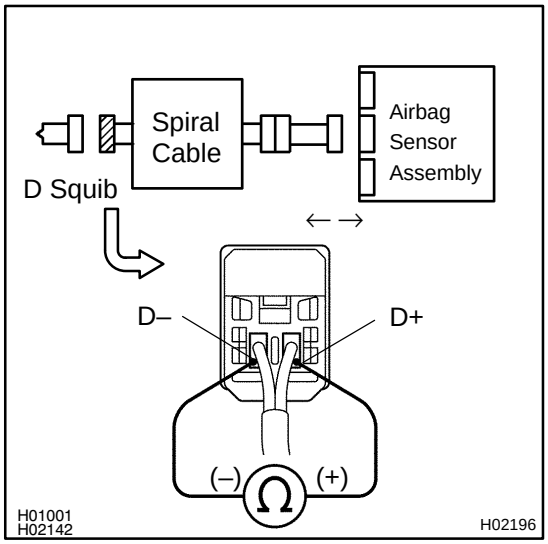

CHECK:

For the connector (on the spiral cable side) between the spiral cable and the steering wheel pad, measure the resistance between D+ and D–.

OK:

Resistance: Below 1 Ω

NG → **Go to step 5.**

OK

3	Check airbag sensor assembly.

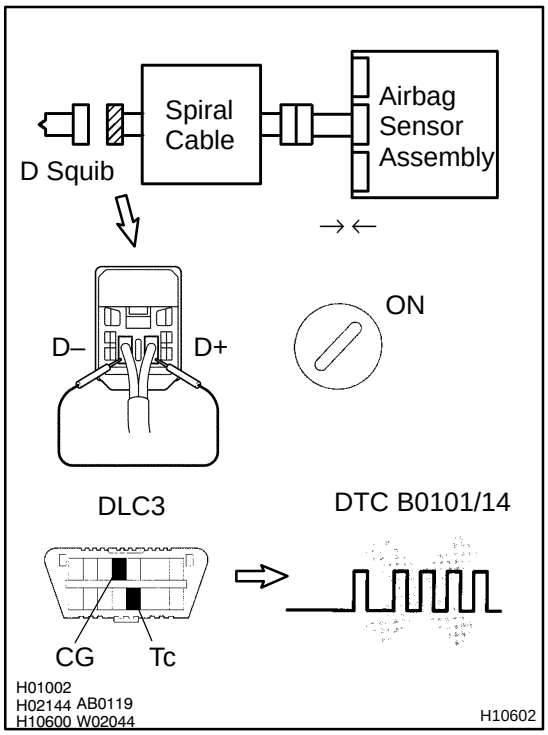

PREPARATION:

(a) Connect the connector to the airbag sensor assembly.
(b) Using a service wire, connect D+ and D– of the connector (on the spiral cable side) between the spiral cable and the steering wheel pad.
(c) Connect negative (–) terminal cable to the battery, and wait at least for 2 seconds.

CHECK:

(a) Turn ignition switch to ON, and wait at least for 20 seconds.
(b) Clear DTC stored in memory (See page DI–490).
(c) Turn ignition switch to LOCK, and wait at least for 20 seconds.
(d) Turn ignition switch to ON, and wait at least for 20 seconds.
(e) Check DTC (See page DI–490).

OK:

DTC B0101/14 is not output.

HINT:

Codes other than code B0101/14 may be output at this time, but they are not relevant to this check.

NG	Replace airbag sensor assembly.

OK

4	Check D squib.

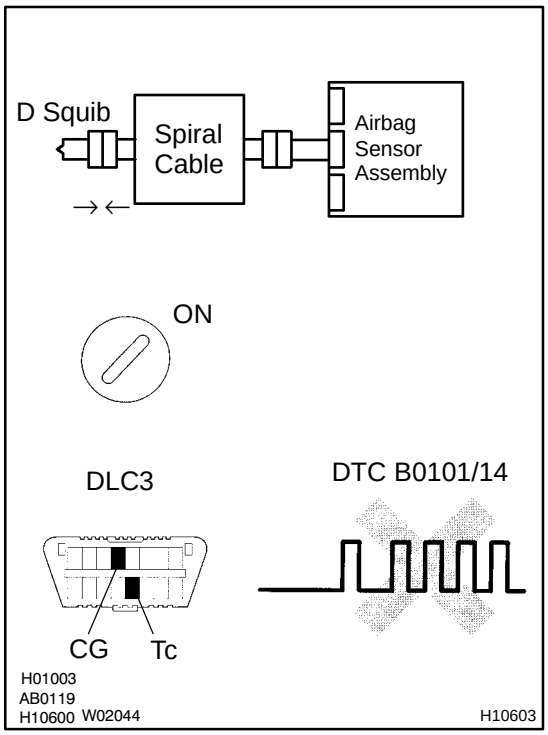

PREPARATION:

(a) Turn ignition switch to LOCK.
(b) Disconnect negative (–) terminal cable from the battery, and wait at least for 90 seconds.
(c) Connect the steering wheel pad connector.
(d) Connect negative (–) terminal cable to the battery, and wait at least for 2 seconds.

CHECK:

(a) Turn ignition switch to ON, and wait at least for 20 seconds.
(b) Clear DTC stored in memory (See page DI–490).
(c) Turn ignition switch to LOCK, and wait at least for 20 seconds.
(d) Turn ignition switch to ON, and wait at least for 20 seconds.
(e) Check DTC (See page DI–490).

OK:

DTC B0101/14 is not output.

HINT:

Codes other than code B0101/14 may be output at this time, but they are not relevant to this check.

NG	Replace steering wheel pad.

OK

From the results of the above inspection, the malfunctioning part can now be considered normal. To make sure of this, use the simulation method to check.

5	Check spiral cable.

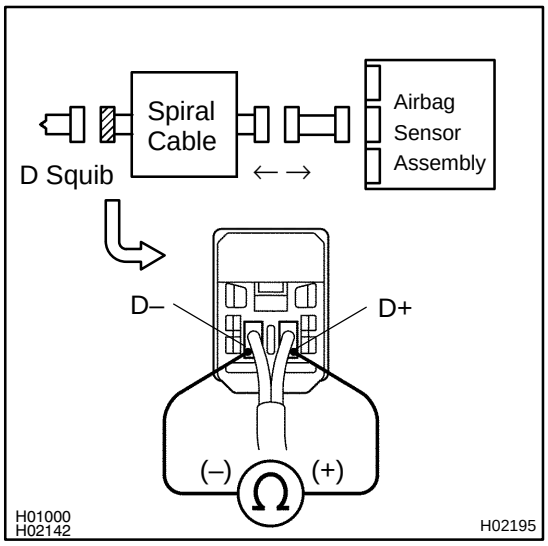

PREPARATION:
Disconnect the connector between the airbag sensor assembly and the spiral cable.

CHECK:
For the connector (on the spiral cable side) between the spiral cable and the steering wheel pad, measure the resistance between D+ and D–.

OK:

Resistance: Below 1 Ω

NG → **Repair or replace spiral cable.**

OK

6	Check harness between airbag sensor assembly and spiral cable.

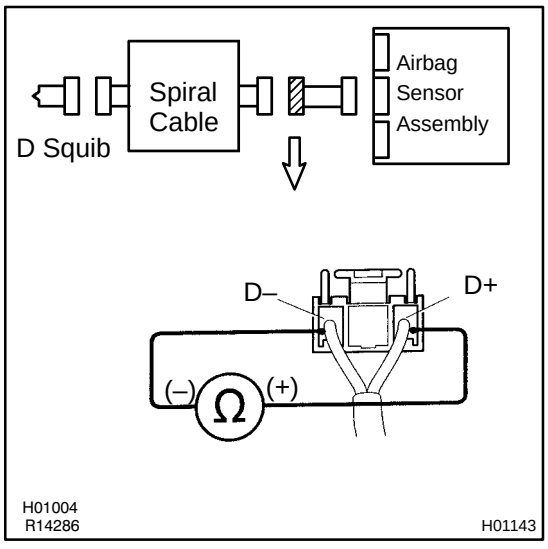

CHECK:
For the connector (on the spiral cable side) between the airbag sensor assembly and the spiral cable, measure the resistance between D+ and D–.

OK:

Resistance: Below 1 Ω

NG → **Repair or replace harness or connector between airbag sensor assembly and spiral cable.**

OK

From the results of the above inspection, the malfunctioning part can now be considered normal. To make sure of this, use the simulation method to check.

DTC	B0102/11	Short in D Squib Circuit (to Ground)

CIRCUIT DESCRIPTION

The D squib circuit consists of the airbag sensor assembly, spiral cable and steering wheel pad.
It causes the SRS to deploy when the SRS deployment conditions are satisfied.
For details of the function of each component, see OPERATION on page RS–2.
DTC B0102/11 is recorded when a ground short is detected in the D squib circuit.

DTC No.	DTC Detecting Condition	Trouble Area
B0102/11	▲Short circuit in D squib wire harness (to ground) ▲D squib malfunction ▲Spiral cable malfunction ▲Airbag sensor assembly malfunction	▲Steering wheel pad (D squib) ▲Spiral cable ▲Airbag sensor assembly ▲Wire harness

WIRING DIAGRAM

See page DI–501.

INSPECTION PROCEDURE

1	**Prepare for inspection (See step 1 on page DI–580).**

2	**Check D squib circuit.**

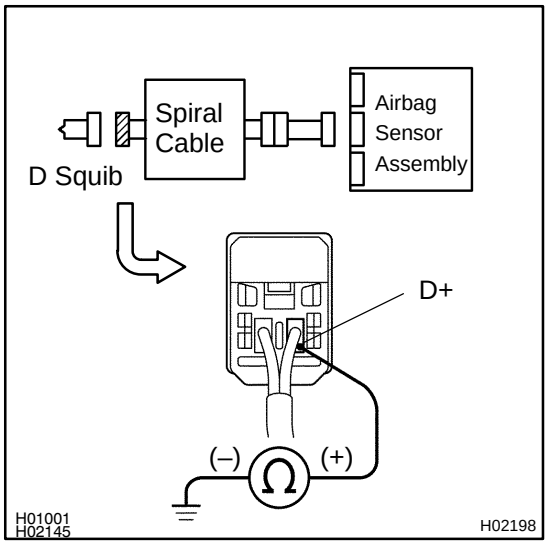

CHECK:

For the connector (on the spiral cable side) between the spiral cable and the steering wheel pad, measure the resistance between D+ and body ground.

OK:

Resistance: 1 MΩ or Higher

NG → **Go to step 5.**

OK

3	Check airbag sensor assembly.

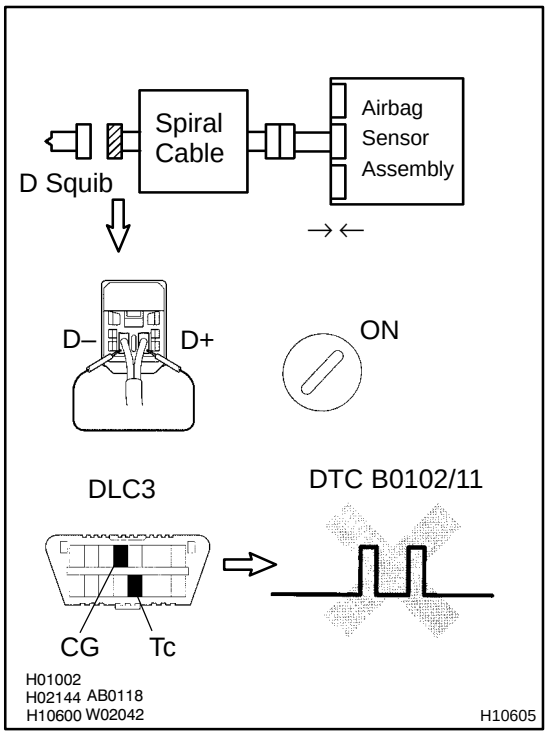

PREPARATION:

(a) Connect the connector to the airbag sensor assembly.
(b) Using a service wire, connect D+ and D– of the connector (on the spiral cable side) between the spiral cable and the steering wheel pad.
(c) Connect negative (–) terminal cable to the battery, and wait at least for 2 seconds.

CHECK:

(a) Turn ignition switch to ON, and wait at least for 20 seconds.
(b) Clear DTC stored in memory
(See step 5 on page DI–490).
(c) Turn ignition switch to LOCK, and wait at least for 20 seconds.
(d) Turn ignition switch to ON, and wait at least for 20 seconds.
(e) Check DTC (See page DI–490).

OK:

DTC B0102/11 is not output.

HINT:
Codes other than code B0102/11 may be output at this time, but they are not relevant to this check.

NG	Replace airbag sensor assembly.

OK

4	Check D squib.

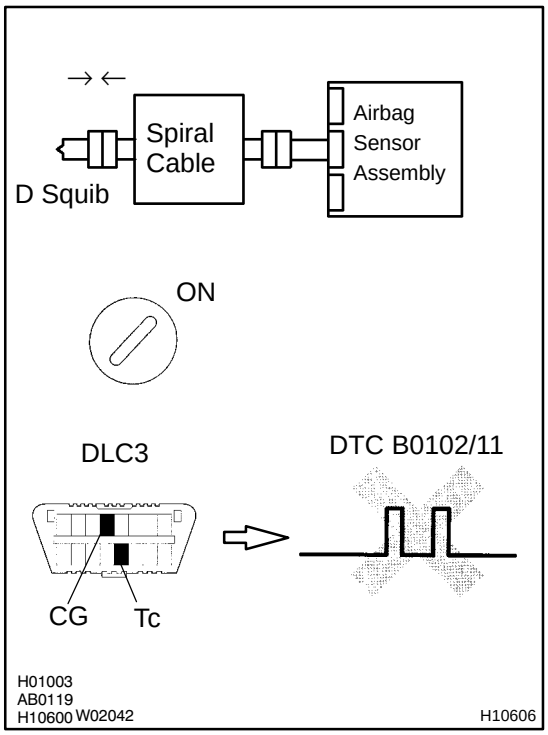

PREPARATION:

(a) Turn ignition switch to LOCK.
(b) Disconnect negative (–) terminal cable from the battery, and wait at least for 90 seconds.
(c) Connect the steering wheel pad connector.
(d) Connect negative (–) terminal cable to the battery, and wait at least for 2 seconds.

CHECK:

(a) Turn ignition switch to ON, and wait at least for 20 seconds.
(b) Clear DTC stored in memory
(See step 5 on page DI–490).
(c) Turn ignition switch to LOCK, and wait at least for 20 seconds.
(d) Turn ignition switch to ON, and wait at least for 20 seconds.
(e) Check DTC (See page DI–490).

OK:

DTC B0102/11 is not output.

HINT:
Codes other than code B0102/11 may be output at this time, but they are not relevant to this check.

NG	Replace steering wheel pad.

OK

From the results of the above inspection, the malfunctioning part can now be considered normal. To make sure of this, use the simulation method to check. If the malfunctioning part can not be detected by the simulation method, replace all SRS components including the wire harness.

5	Check spiral cable.

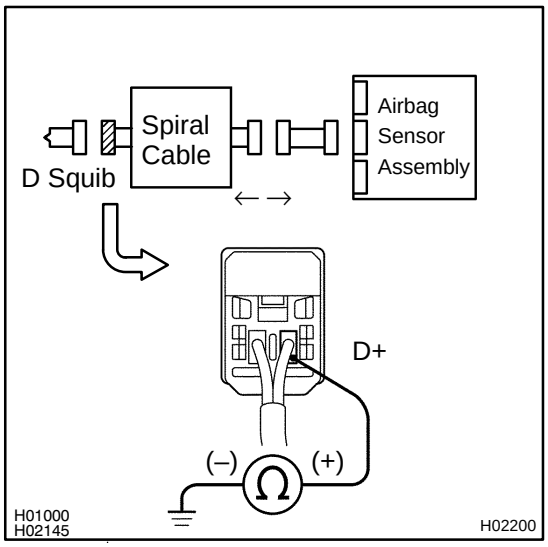

PREPARATION:

Disconnect the connector between the airbag sensor assembly and the spiral cable.

CHECK:

For the connector (on the spiral cable side) between the steering wheel pad and the spiral cable, measure the resistance between D+ and body ground.

OK:

Resistance: 1 MΩ or Higher

NG → **Repair or replace spiral cable.**

OK

6	Check harness between airbag sensor assembly and spiral cable.

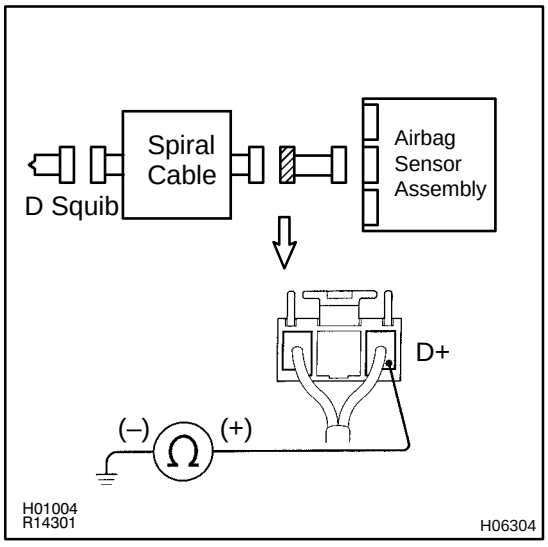

CHECK:

For the connector (on the spiral cable side) between the spiral cable and the airbag sensor assembly, measure the resistance between D+ and body ground.

OK:

Resistance: 1 MΩ or Higher

NG → **Repair or replace harness between airbag sensor assembly and spiral cable.**

OK

From the results of the above inspection, the malfunctioning part can now be considered normal. To make sure of this, use the simulation method to check. If the malfunctioning part can not be detected by the simulation method, replace all SRS components including the wire harness.

DI4L3–15

DTC	B0103/12	Short in D Squib Circuit (to B+)

CIRCUIT DESCRIPTION

The D squib circuit consists of the airbag sensor assembly, spiral cable and steering wheel pad.
It causes the SRS to deploy when the SRS deployment conditions are satisfied.
For details of the function of each component, see OPERATION on page RS–2.
DTC B0103/12 is recorded when a B+ short is detected in the D squib circuit.

DTC No.	DTC Detecting Condition	Trouble Area
B0103/12	▲Short circuit in D squib wire harness (to B+) ▲D squib malfunction ▲Spiral cable malfunction ▲Airbag sensor assembly malfunction	▲Steering wheel pad (D squib) ▲Spiral cable ▲Airbag sensor assembly ▲Wire harness

WIRING DIAGRAM

See page DI–501.

INSPECTION PROCEDURE

1	**Prepare for inspection (See step 1 on page DI–580).**

2	**Check D squib circuit.**

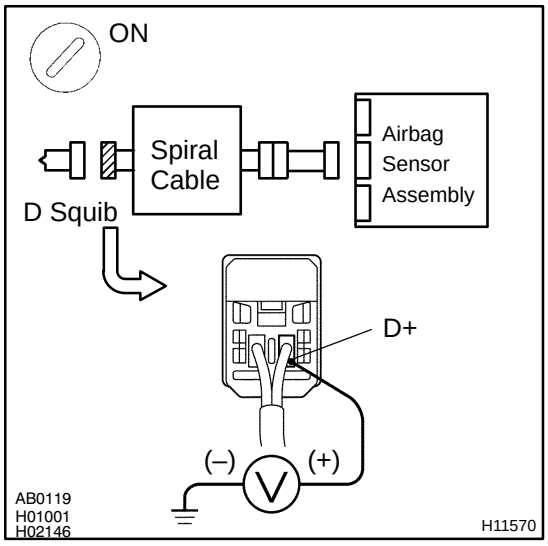

CHECK:

(a) Turn ignition switch to ON.

(b) For the connector (on the spiral cable side) between the spiral cable and the steering wheel pad, measure the voltage between D+ and body ground.

OK:

Voltage: 0 V

NG → **Go to step 5.**

OK

3	Check airbag sensor assembly.

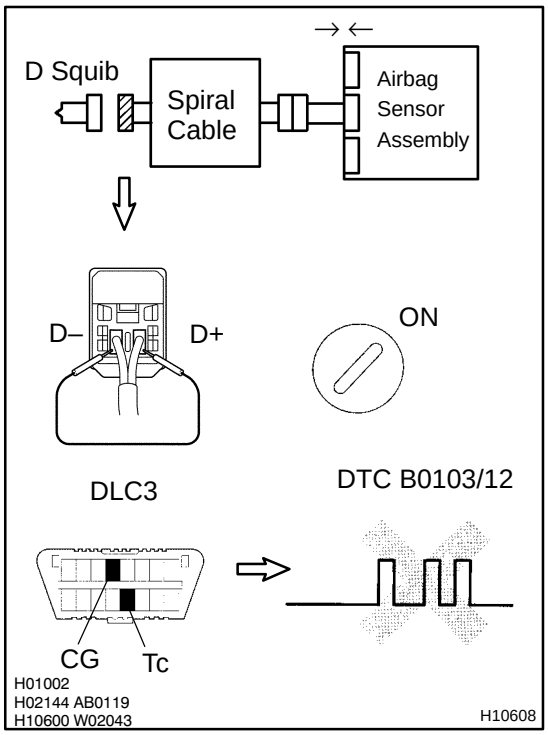

PREPARATION:

(a) Connect the connector to the airbag sensor assembly.
(b) Using a service wire, connect D+ and D– of the connector (on the spiral cable side) between the spiral cable and the steering wheel pad.
(c) Connect negative (–) terminal cable to the battery, and wait at least for 2 seconds.

CHECK:

(a) Turn ignition switch to ON, and wait at least for 20 seconds.
(b) Clear DTC stored in memory
(See step 5 on page DI–490).
(c) Turn ignition switch to LOCK, and wait at least for 20 seconds.
(d) Turn ignition switch to ON, and wait at least for 20 seconds.
(e) Check DTC (See page DI–490).

OK:

DTC B0103/12 is not output.

HINT:
Codes other than code B0103/12 may be output at this time, but they are not relevant to this check.

NG	Replace airbag sensor assembly.

OK

4	Check D squib.

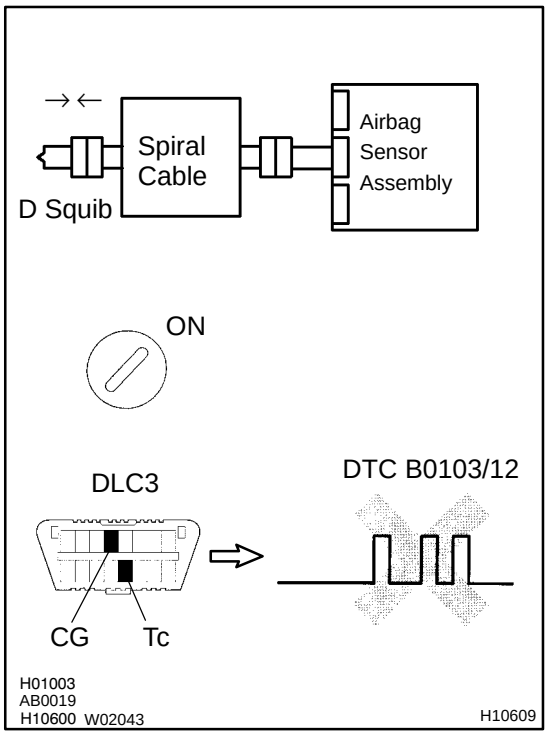

PREPARATION:

(a) Turn ignition switch to LOCK.
(b) Disconnect negative (–) terminal cable from the battery, and wait at least for 90 seconds.
(c) Connect the steering wheel pad connector.
(d) Connect negative (–) terminal cable to the battery, and wait at least for 2 seconds.

CHECK:

(a) Turn ignition switch to ON, and wait at least for 20 seconds.
(b) Clear DTC stored in memory
(See step 5 on page DI–490).
(c) Turn ignition switch to LOCK, and wait at least for 20 seconds.
(d) Turn ignition switch to ON, and wait at least for 20 seconds.
(e) Check DTC (See page DI–490).

OK:

DTC B0103/12 is not output.

HINT:
Codes other than code B0103/12 may be output at this time, but they are not relevant to this check.

NG	Replace steering wheel pad.

OK

From the results of the above inspection, the malfunctioning part can now be considered normal. To make sure of this, use the simulation method to check. If the malfunctioning part can not be detected by the simulation method, replace all SRS components including the wire harness.

5	Check spiral cable.

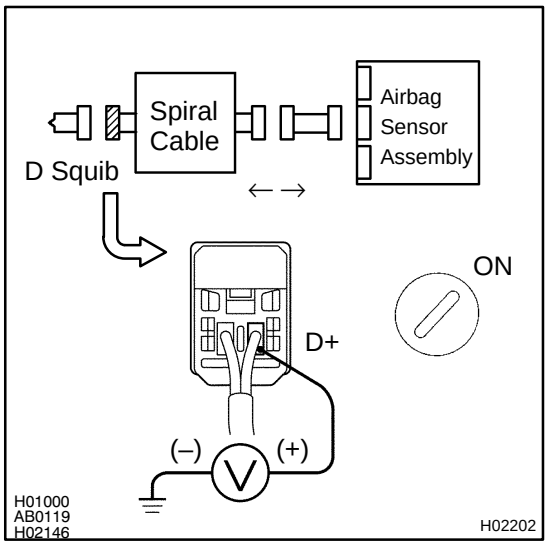

PREPARATION:

(a) Turn ignition switch to LOCK.

(b) Disconnect the connector between the airbag sensor assembly and the spiral cable.

CHECK:

(a) Turn ignition switch to ON.

(b) For the connector (on the spiral cable side) between the spiral cable and the steering wheel pad, measure the voltage between D+ and body ground.

OK:

Voltage: 0 V

NG → **Repair or replace spiral cable.**

OK

6	Check harness between airbag sensor assembly and spiral cable.

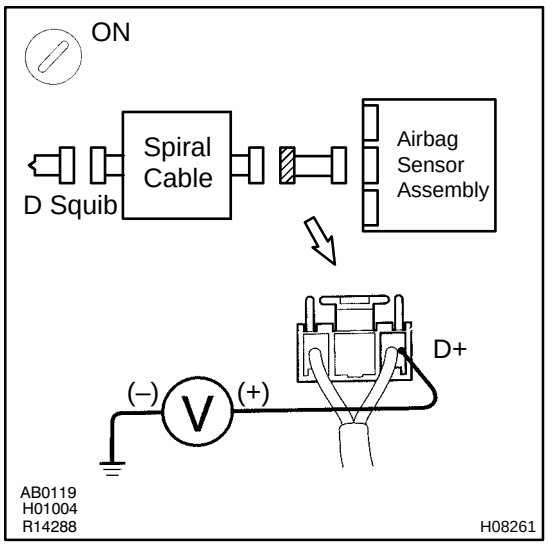

CHECK:

(a) Turn ignition switch to ON.

(b) For the connector (on the spiral cable side) between the spiral cable and airbag sensor assembly, measure the voltage between D+ and body ground.

OK:

Voltage: 0 V

NG → **Repair or replace harness between airbag sensor assembly and spiral cable.**

OK

From the results of the above inspection, the malfunctioning part can now be considered normal. To make sure of this, use the simulation method to check. If the malfunctioning part can not be detected by the simulation method, replace all SRS components including the wire harness.

DI65T–04

DTC	B0105/53	Short in P Squib Circuit

CIRCUIT DESCRIPTION

The P squib circuit consists of the airbag sensor assembly, passenger airbag manual on–off switch and front passenger airbag assembly.
It causes the SRS to deploy when the SRS deployment conditions are satisfied.
For details of the function of each component, see OPERATION on page RS–2.
DTC B0105/53 is recorded when a short is detected in the P squib circuit.

DTC No.	DTC Detecting Condition	Trouble Area
B0105/53	▲Short circuit in P squib wire harness ▲P squib malfunction ▲Airbag sensor assembly malfunction	▲Front passenger airbag assembly (P squib) ▲Passenger airbag manual on–off switch ▲Airbag sensor assembly ▲Wire harness

WIRING DIAGRAM

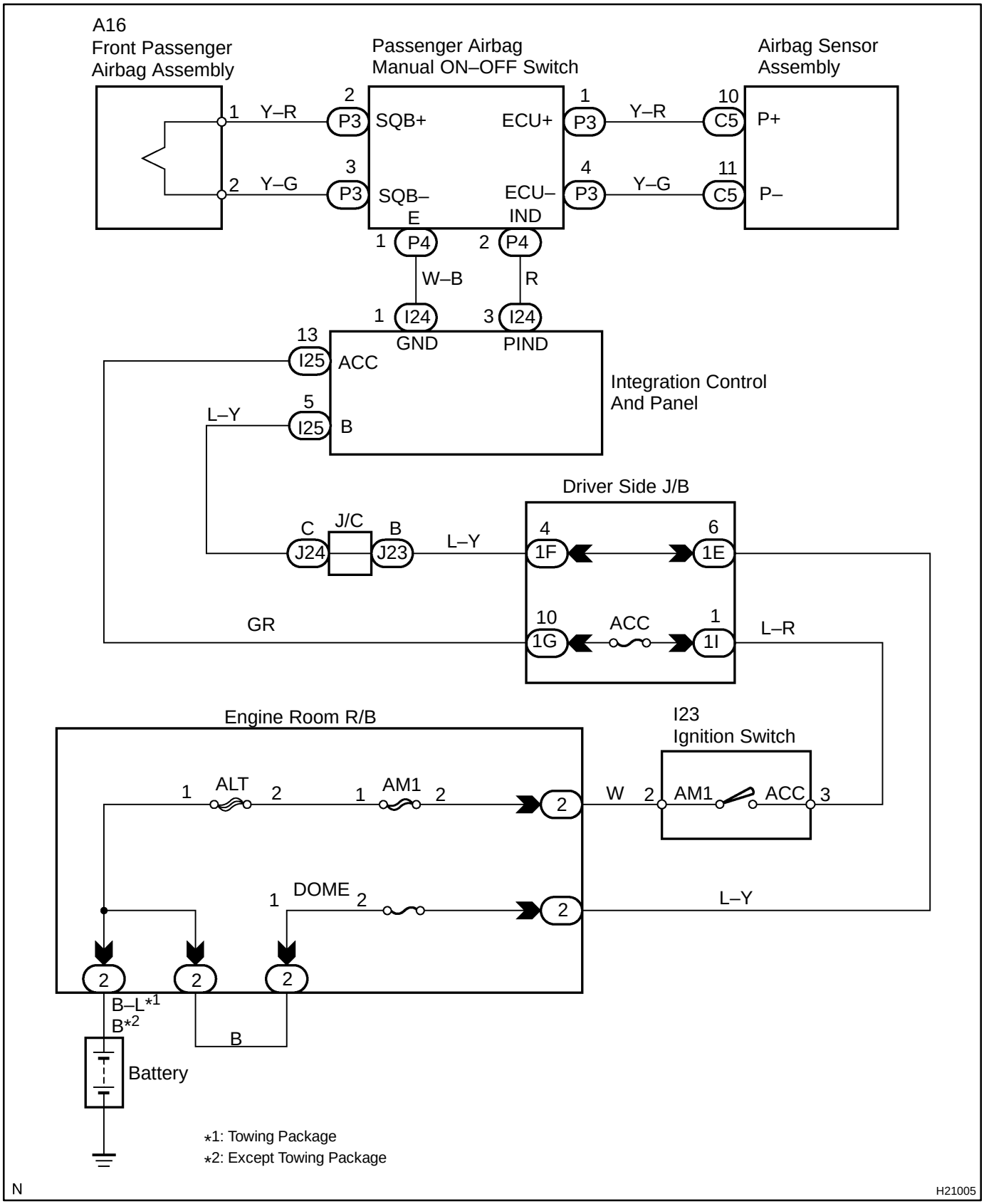

INSPECTION PROCEDURE

1	**Prepare for inspection (See step 1 on page DI–580).**

2	**Check passenger airbag manual on–off switch (See page RS–45).**

NG → **Replace passenger airbag manual on–off switch.**

OK

3	**Check P squib circuit.**

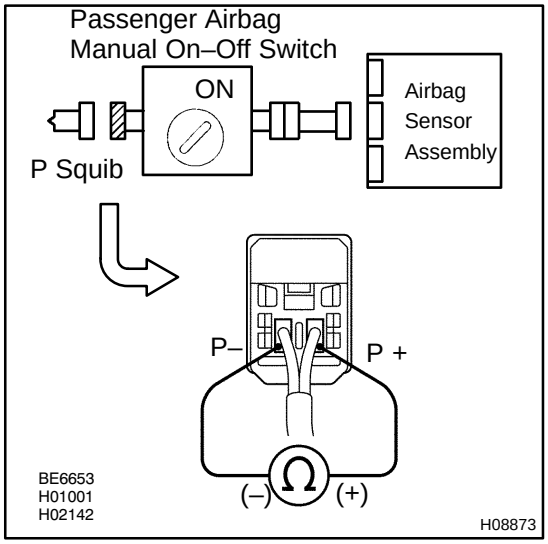

PREPARATION:

(a) Turn passenger airbag manual on–off switch to ON.

(b) Release the airbag activation prevention mechanism of the connector (on airbag sensor assembly side) between the airbag sensor assembly and the passenger airbag manual on–off switch (See page DI–490).

CHECK:

For the connector (on the passenger airbag manual on–off switch side) between the front passenger airbag assembly and the passenger airbag manual on–off switch, measure the resistance between P+ and P–.

OK:

Resistance: 1 MΩ or Higher

NG → **Go to step 6.**

OK

4	**Check airbag sensor assembly.**

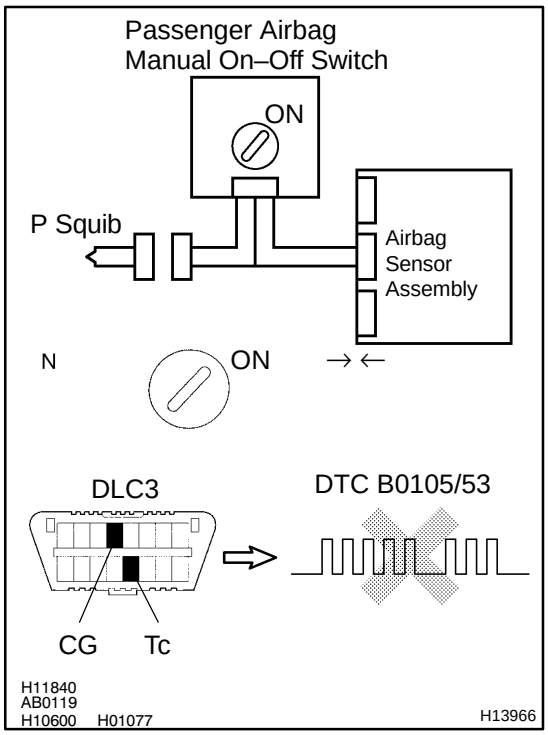

PREPARATION:

(a) Turn passenger airbag manual on–off switch to ON.
(b) Connect the connector to the airbag sensor assembly.
(c) Connect negative (–) terminal cable to the battery, and wait at least for 2 seconds.

CHECK:

(a) Turn ignition switch to ON, and wait at least for 20 seconds.
(b) Clear DTC stored in memory (See page DI–490).
(c) Turn ignition switch to LOCK, and wait at least for 20 seconds.
(d) Turn ignition switch to ON, and wait at least for 20 seconds.
(e) Check DTC (See page DI–490).

OK:

DTC B0105/53 is not output.

HINT:

Codes other than code B0105/53 may be output at this time, but they are not relevant to this check.

NG	**Replace airbag sensor assembly.**

OK

5	Check P squib.

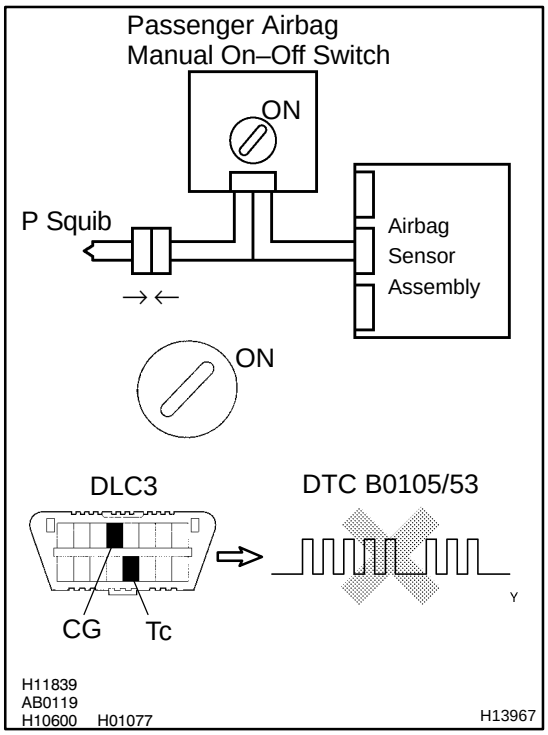

PREPARATION:

(a) Turn passenger airbag manual on–off switch to ON.
(b) Turn ignition switch to LOCK.
(c) Disconnect negative (–) terminal cable from the battery, and wait at least for 90 seconds.
(d) Connect the front passenger airbag assembly connector.
(e) Connect negative (–) terminal cable to the battery, and wait at least for 2 seconds.

CHECK:

(a) Turn ignition switch to LOOK, and wait at least for 20 seconds.
(b) Turn ignition switch to ON, and wait at least for 20 seconds.
(c) Clear DTC stored in memory (See page DI–490).
(d) Turn ignition switch to LOCK, and wait at least for 20 seconds.
(e) Turn ignition switch to ON, and wait at least for 20 seconds.
(f) Check DTC (See page DI–490).

OK:

DTC B0105/53 is not output.

HINT:
Codes other than code B0105/53 may be output at this time, but they are not relevant to this check.

NG	Replace front passenger airbag assembly.

OK

From the results of the above inspection, the malfunctioning part can now be considered normal. To make sure of this, use the simulation method to check.

6	**Check harness between airbag sensor assembly and passenger airbag manual on–off switch.**

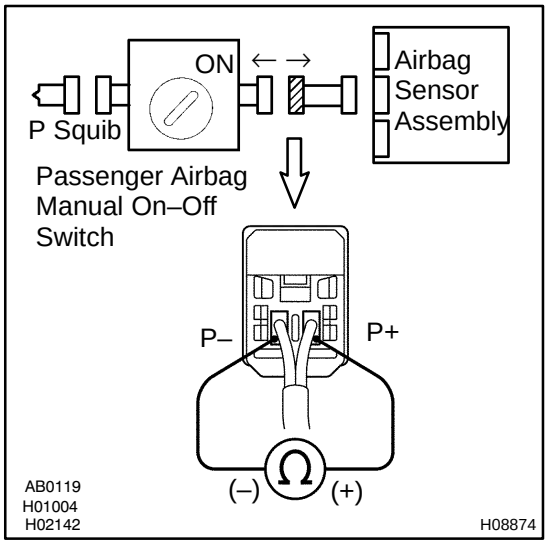

PREPARATION:

(a) Disconnect the connector between the airbag sensor assembly and passenger airbag manual on–off switch.

(b) Release the airbag activation prevention mechanism of the connector (on the airbag sensor assembly side) between the airbag sensor assembly and the passenger airbag manual on–off switch (See page DI–490).

CHECK:

For the connector (on the passenger airbag manual on–off switch side) between the airbag sensor assembly and passenger airbag manual on–off switch, measure the resistance P+ and P–.

OK:

Resistance: 1 MΩ or Higher

NG → **Repair or replace harness or connector between airbag sensor assembly and passenger airbag manual on–off switch.**

OK

From the results of the above inspection, the malfunctioning part can now be considered normal. To make sure of this, use the simulation method to check.

DI65U–02

DTC	B0106/54	Open in P Squib Circuit

CIRCUIT DESCRIPTION

The P squib circuit consists of the airbag sensor assembly, passenger airbag manual on–off switch and front passenger airbag assembly.
It causes the SRS to deploy when the SRS deployment conditions are satisfied.
For details of the function of each component, see OPERATION on page RS–2.
DTC B0106/54 is recorded when an open is detected in the P squib circuit.

DTC No.	DTC Detecting Condition	Trouble Area
B0106/54	▲Open circuit in P+ wire harness or P– wire harness of squib ▲P squib malfunction ▲Airbag sensor assembly malfunction	▲Front passenger airbag assembly (P squib) ▲Passenger airbag manual on–off switch ▲Airbag sensor assembly ▲Wire harness

WIRING DIAGRAM

See page DI–518.

INSPECTION PROCEDURE

1	**Prepare for inspection (See step 1 on page DI–580).**

2	**Check passenger airbag manual on–off switch (See page RS–45).**

NG → **Replace passenger airbag manual on–off switch.**

OK

3	Check P squib circuit.

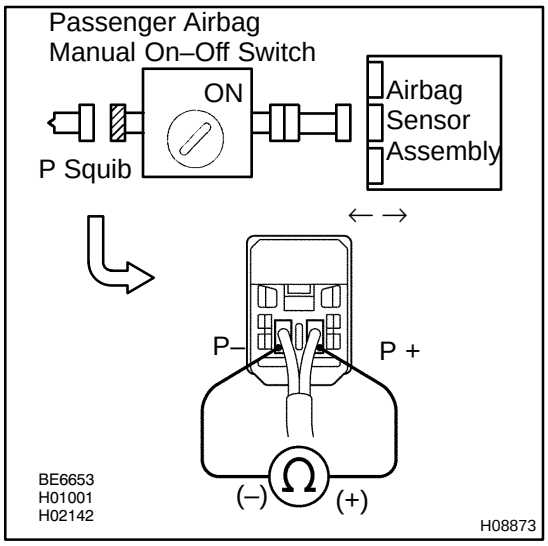

PREPARATION:

Turn passenger airbag manual on–off switch to ON.

CHECK:

For the connector (on the passenger airbag manual on–off switch side) between the front passenger airbag assembly and the passenger airbag manual on–off switch, measure the resistance between P+ and P–.

OK:

Resistance: Below 1 Ω

NG → **Go to step 6.**

OK

4	Check airbag sensor assembly.

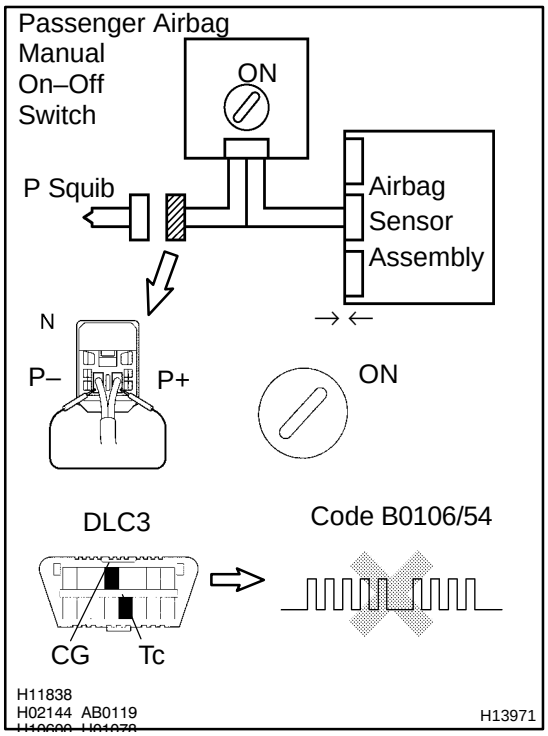

PREPARATION:

(a) Turn passenger airbag manual on–off switch to ON.
(b) Connect the connector to the airbag sensor assembly.
(c) Using a service wire, connect P+ and P– of the connector (on the passenger airbag manual on–off switch side) between the front passenger airbag assembly and the passenger airbag manual on–off switch.
(d) Connect negative (–) terminal cable to the battery, and wait at least for 2 seconds.

CHECK:

(a) Turn ignition switch to ON, and wait at least for 20 seconds.
(b) Clear DTC stored in memory (See page DI–490).
(c) Turn ignition switch to LOCK, and wait at least for 20 seconds.
(d) Turn ignition switch to ON, and wait at least for 20 seconds.
(e) Check DTC (See page DI–490).

OK:

DTC B0106/54 is not output.

HINT:
Codes other than code B0106/54 may be output at this time, but they are not relevant to this check.

NG	Replace airbag sensor assembly.

OK

5	Check P squib.

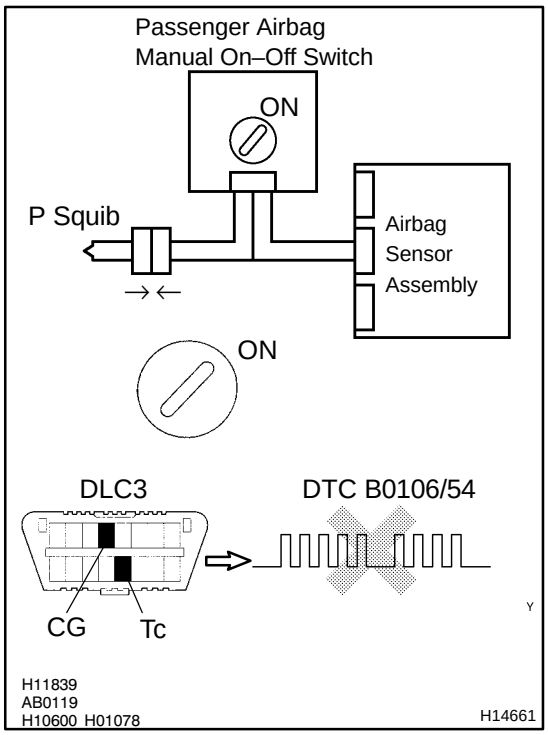

PREPARATION:

(a) Turn passenger airbag manual on–off switch to ON.
(b) Turn ignition switch to LOCK.
(c) Disconnect negative (–) terminal cable from the battery, and wait at least for 90 seconds.
(d) Connect the front passenger airbag assembly connector.
(e) Connect negative (–) terminal cable to the battery, and wait at least for 2 seconds.

CHECK:

(a) Turn ignition switch to ON, and wait at least for 20 seconds.
(b) Clear DTC stored in memory (See page DI–490).
(c) Turn ignition switch to LOCK, and wait at least for 20 seconds.
(d) Turn ignition switch to ON, and wait at least for 20 seconds.
(e) Check DTC (See page DI–490).

OK:

DTC B0106/54 is not output.

HINT:

Codes other than code B0106/54 may be output at this time, but they are not relevant to this check.

NG → **Replace front passenger airbag assembly.**

OK

From the results of the above inspection, the malfunctioning part can now be considered normal. To make sure of this, use the simulation method to check.

6	**Check harness between airbag sensor assembly and passenger airbag manual on–off switch.**

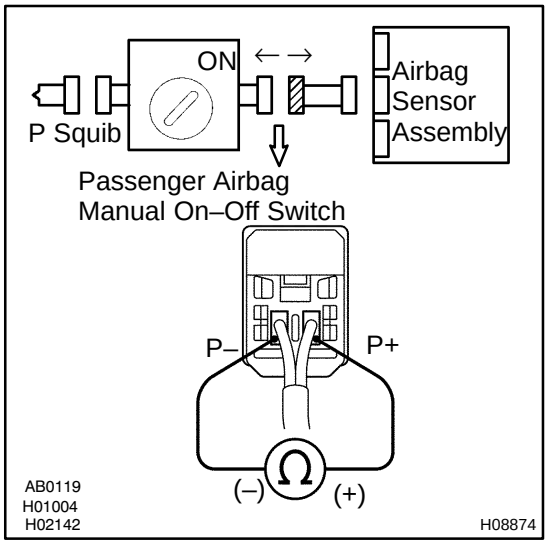

PREPARATION:

Disconnect the connector between the airbag sensor assembly and passenger airbag manual on–off switch.

CHECK:

For the connector (on the passenger airbag manual on–off switch side) between the airbag sensor assembly and the passenger airbag manual on–off switch, measure the resistance between P+ and P–.

OK:

Resistance: Below 1 Ω

NG → **Repair or replace harness or connector between airbag sensor assembly and passenger airbag manual on–off switch.**

OK

From the results of the above inspection, the malfunctioning part can now be considered normal. To make sure of this, use the simulation method to check.

DI65V–02

DTC	B0107/51	Short in P Squib Circuit (to Ground)

CIRCUIT DESCRIPTION

The P squib circuit consists of the airbag sensor assembly, passenger airbag manual on–off switch and front passenger airbag assembly.
It causes the SRS to deploy when the SRS deployment conditions are satisfied.
For details of the function of each component, see OPERATION on page RS–2.
DTC B0107/51 is recorded when a ground short is detected in the P squib circuit.

DTC No.	DTC Detecting Condition	Trouble Area
B0107/51	▲Short circuit in P squib wire harness (to ground) ▲P squib malfunction ▲Airbag sensor assembly malfunction	▲Front passenger airbag assembly (P squib) ▲Passenger airbag manual on–off switch ▲Airbag sensor assembly ▲Wire harness

WIRING DIAGRAM

See page DI–518.

INSPECTION PROCEDURE

1	**Prepare for inspection (See step 1 on page DI–580).**

2	**Check passenger airbag manual on–off switch (See page RS–45).**

NG → **Replace passenger airbag manual on–off switch.**

OK

3	Check P squib circuit.

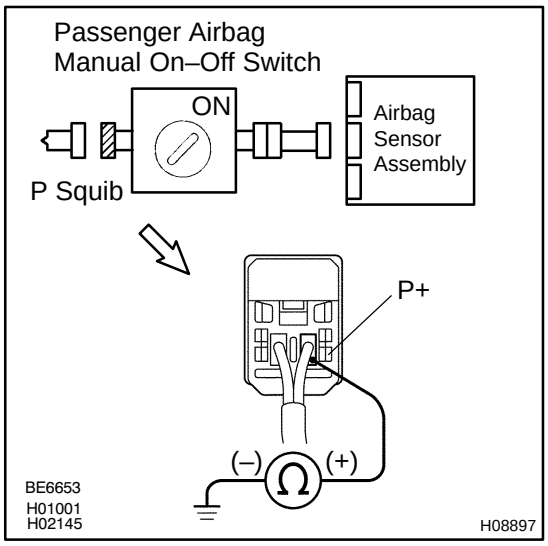

PREPARATION:

Turn passenger airbag manual on–off switch to ON.

CHECK:

For the connector (on the passenger airbag manual on–off switch side) between the front passenger airbag assembly and the airbag sensor assemby, measure the resistance between the P+ and body ground.

OK:

Resistance: 1 MΩ or Higher

NG → **Go to step 6.**

OK

4	Check airbag sensor assembly.

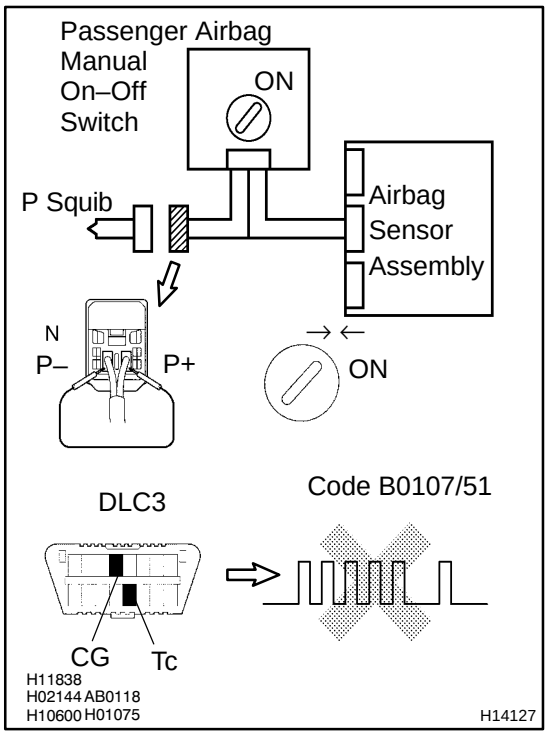

PREPARATION:

(a) Turn passenger airbag manual on–off switch to ON.
(b) Connect the connector to the airbag sensor assembly.
(c) Using a service wire, connect P+ and P– of the connector (on the passenger airbag manual on–off switch side) between the front passenger airbag assembly and the passenger airbag manual on–off switch.
(d) Connect negative (–) terminal cable to the battery, and wait at least for 2 seconds.

CHECK:

(a) Turn ignition switch to ON, and wait at least for 20 seconds.
(b) Clear DTC stored in memory
(See step 5 on page DI–490).
(c) Turn ignition switch to LOCK, and wait at least for 20 seconds.
(d) Turn ignition switch to ON, and wait at least for 20 seconds.
(e) Check DTC (See page DI–490).

OK:

DTC B0107/51 is not output.

HINT:
Codes other than code B0107/51 may be output at this time, but they are not relevant to this check.

NG	Replace airbag sensor assembly.

OK

5	Check P squib.

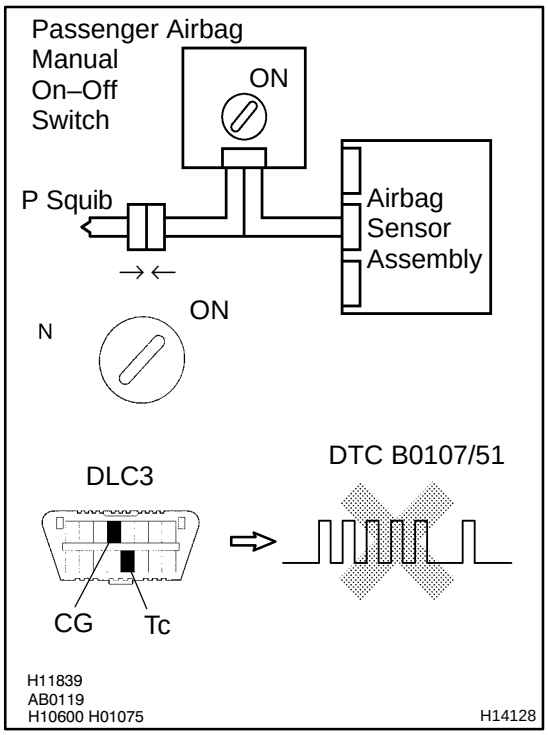

PREPARATION:

(a) Turn passenger airbag manual on–off switch to ON.
(b) Turn ignition switch to LOCK.
(c) Disconnect negative (–) terminal cable from the battery, and wait at least for 90 seconds.
(d) Connect the front passenger airbag assembly connector.
(e) Connect negative (–) terminal cable to the battery, and wait at least for 2 seconds.

CHECK:

(a) Turn ignition switch to ON, and wait at least for 20 seconds.
(b) Clear DTC stored in memory
(See step 5 on page DI–490).
(c) Turn ignition switch to LOCK, and wait at least for 20 seconds.
(d) Turn ignition switch to ON, and wait at least for 20 seconds.
(e) Check DTC (See page DI–490).

OK:

DTC B0107/51 is not output.

HINT:
Codes other than code B0107/51 may be output at this time, but they are not relevant to this check.

NG → **Replace front passenger airbag assembly.**

OK

From the results of the above inspection, the malfunctioning part can now be considered normal. To make sure of this, use the simulation method to check. If the malfunctioning part can not be detected by the simulation method, replace all SRS components including the wire harness.

6	**Check harness between airbag sensor assembly and passenger airbag manual on–off switch.**

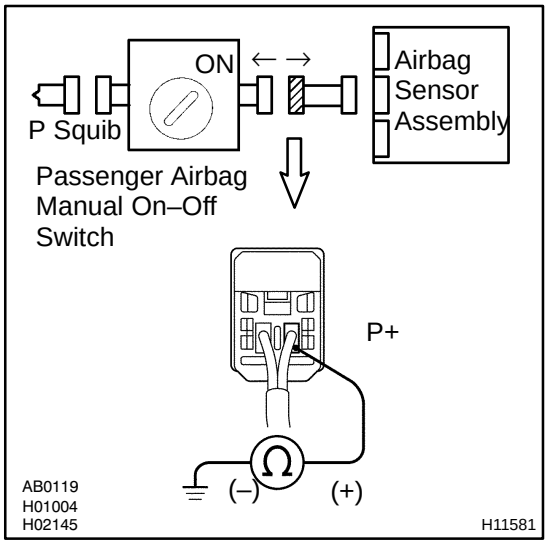

PREPARATION:

(a) Disconnect the connector between the airbag sensor assembly and passenger airbag manual on–off switch.

(b) Release the airbag activation prevention mechanism of the connector (on the airbag sensor assembly side) between the airbag sensor assembly and the passenger airbag manual on–off switch (See page DI–490).

CHECK:

For the connector (on the passenger airbag manual on–off switch side) between the airbag sensor assembly and passenger airbag manual on–off switch, measure the resistance P+ and P–.

OK:

Resistance: 1 MΩ or Higher

NG → **Repair or replace harness or connector between airbag sensor assembly and passenger airbag manual on–off switch.**

OK

From the results of the above inspection, the malfunctioning part can now be considered normal. To make sure of this, use the simulation method to check.

DI65W–02

DTC	B0108/52	Short in P Squib Circuit (to B+)

CIRCUIT DESCRIPTION

The P squib circuit consists of the airbag sensor assembly, passenger airbag manual on–off switch and front passenger airbag assembly.
It causes the SRS to deploy when the SRS deployment conditions are satisfied.
For details of the function of each component, see OPERATION on page RS–2.
DTC B0108/52 is recorded when a B+ short is detected in the P squib circuit.

DTC No.	DTC Detecting Condition	Trouble Area
B0108/52	▲Short circuit in P squib wire harness (to B+) ▲P squib malfunction ▲Airbag sensor assembly malfunction	▲Front passenger airbag assembly (P squib) ▲Passenger airbag manual on–off switch ▲Airbag sensor assembly ▲Wire harness

WIRING DIAGRAM

See page DI–518.

INSPECTION PROCEDURE

1	**Prepare for inspection (See step 1 on page DI–580).**

2	**Check passenger airbag manual on–off switch (See page RS–45).**

NG → **Replace passenger airbag manual on–off switch.**

OK

3	Check P squib circuit.

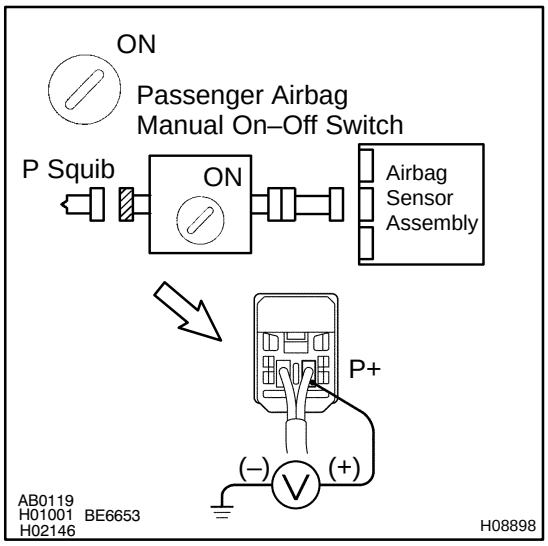

PREPARATION:

Turn passenger airbag manual on–off switch to ON.

CHECK:

For the connector (on the passenger airbag manual on–off switch side) between the front passenger airbag assembly and the passenger airbag manual on–off switch, measure the voltage between P+ and body ground.

OK:

Voltage: 0 V

NG → **Go to step 6.**

OK

4	Check airbag sensor assembly.

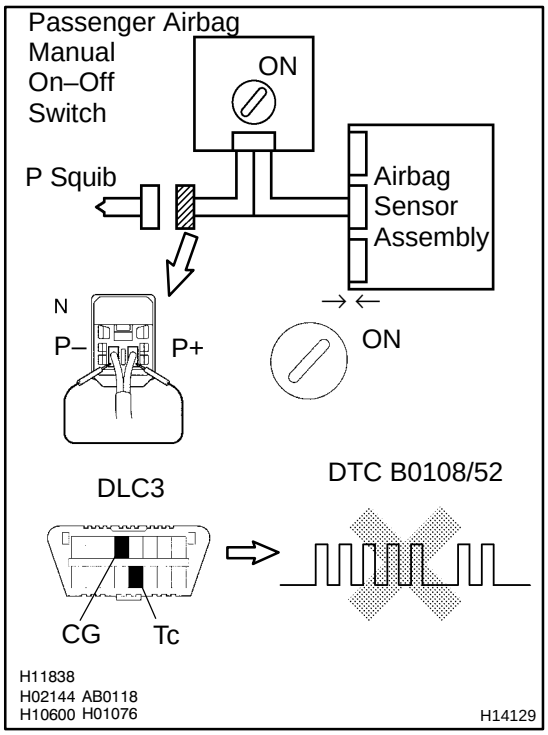

PREPARATION:

(a) Turn passenger airbag manual on–off switch to ON.
(b) Connect the connector to the airbag sensor assembly.
(c) Using a service wire, connect P+ and P– of the connector (on the passenger airbag manual on–off switch side) between the front passenger airbag assembly and the passenger airbag manual on–off switch.
(d) Connect negative (–) terminal cable to the battery, and wait at least for 2 seconds.

CHECK:

(a) Turn ignition switch to ON, and wait at least for 20 seconds.
(b) Clear DTC stored in memory
(See step 5 on page DI–490).
(c) Turn ignition switch to LOCK, and wait at least for 20 seconds.
(d) Turn ignition switch to ON, and wait at least for 20 seconds.
(e) Check DTC (See page DI–490).

OK:

DTC B0108/52 is not output.

HINT:
Codes other than code B0108/52 may be output at this time, but they are not relevant to this check.

NG	Replace airbag sensor assembly.

OK

5	Check P squib.

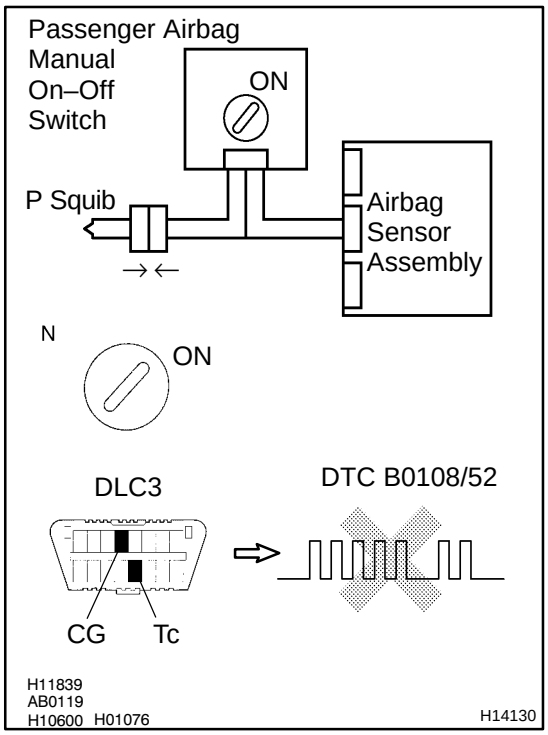

PREPARATION:

(a) Turn passenger airbag manual on–off switch to ON.
(b) Turn ignition switch to LOCK.
(c) Disconnect negative (–) terminal cable from the battery, and wait at least for 90 seconds.
(d) Connect the front passenger airbag assembly connector.
(e) Connect negative (–) terminal cable to the battery, and wait at least for 2 seconds.

CHECK:

(a) Turn ignition switch to ON, and wait at least for 20 seconds.
(b) Clear DTC stored in memory
(See step 5 on page DI–490).
(c) Turn ignition switch to LOCK, and wait at least for 20 seconds.
(d) Turn ignition switch to ON, and wait at least for 20 seconds.
(e) Check DTC (See page DI–490).

OK:

DTC B0108/52 is not output.

HINT:
Codes other than code B0108/52 may be output at this time, but they are not relevant to this check.

NG → **Replace front passenger airbag assembly.**

OK

From the results of the above inspection, the malfunctioning part can now be considered normal. To make sure of this, use the simulation method to check. If the malfunctioning part can not be detected by the simulation method, replace all SRS components including the wire harness.

6	**Check harness between airbag sensor assembly and passenger airbag manual on–off switch.**

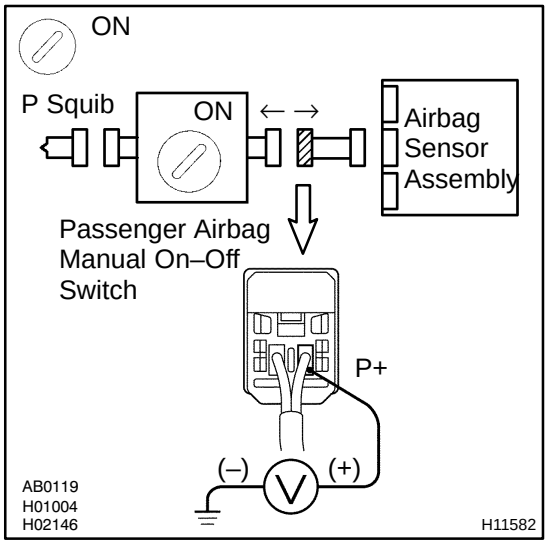

CHECK:

(a) Turn passenger airbag manual on–off switch to ON.

(b) For the connector (on the passenger airbag manual on–off switch side) between the airbag sensor assembly and passenger airbag manual on–off switch, measure the voltage between P+ and body ground.

OK:

Voltage: 0 V

NG → **Repair or replace harness or connector between airbag sensor assembly and passenger airbag manual on–off switch.**

OK

From the results of the above inspection, the malfunctioning part can now be considered normal. To make sure of this, use the simulation method to check.

DI16S–47

DTC	B0130/63	Short in P/T Squib (RH) Circuit

CIRCUIT DESCRIPTION

The P/T squib (RH) circuit consists of the airbag sensor assembly and seat belt pretensioner (RH).
It causes the SRS to deploy when the SRS deployment conditions are satisfied.
For details of the function of each component, see OPERATION on page RS–2.
DTC B0130/63 is recorded when a short is detected in the P/T squib (RH) circuit.

DTC No.	DTC Detecting Condition	Trouble Area
B0130/63	▲Short circuit between PR+ wire harness and PR– wire harness of squib ▲P/T squib (RH) malfunction ▲Airbag sensor assembly malfunction	▲Seat belt pretensioner (RH) ▲Airbag sensor assembly ▲Wire harness

WIRING DIAGRAM

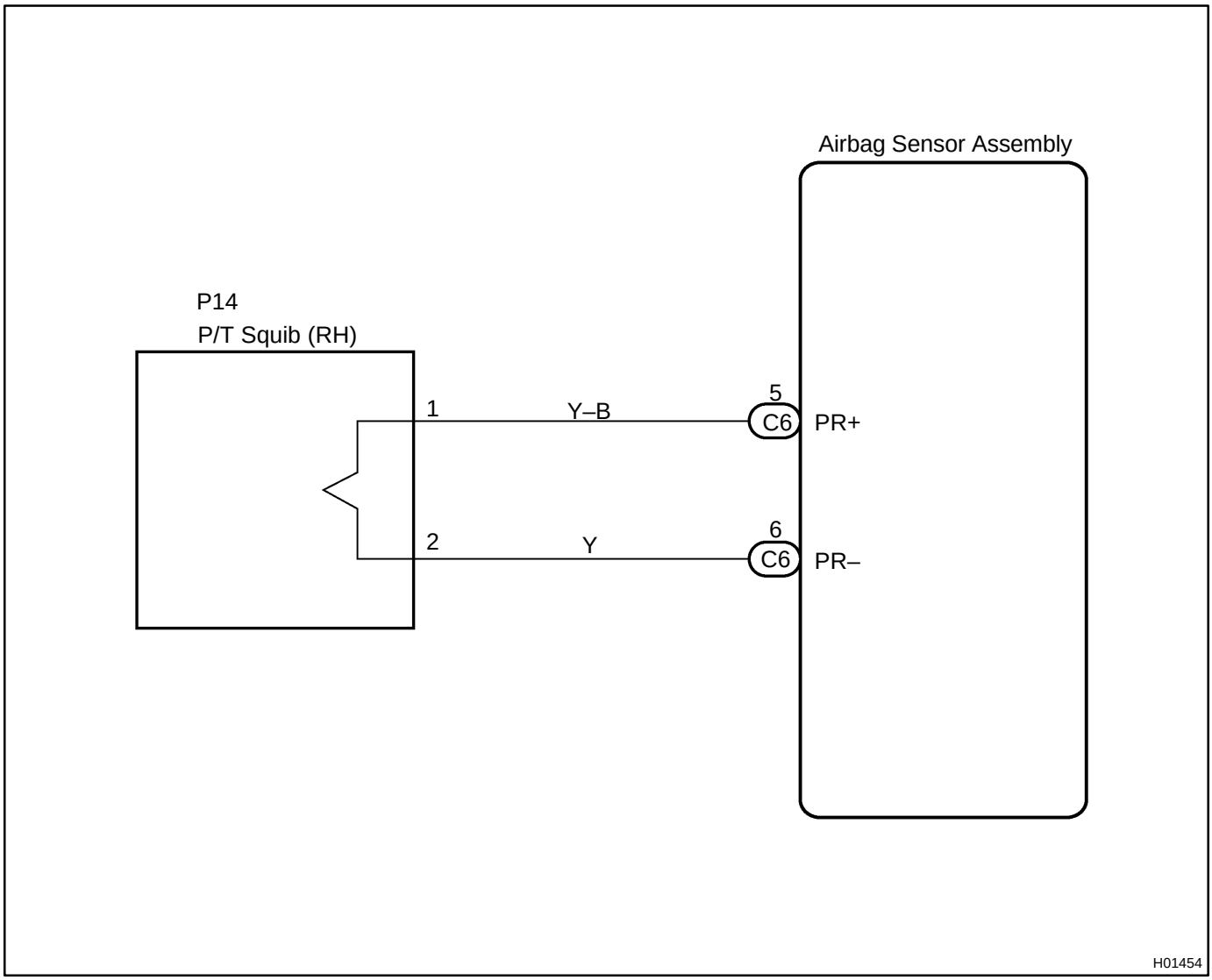

INSPECTION PROCEDURE

1	**Prepare for inspection (See step 1 on page DI–580).**

2	**Check P/T squib (RH) circuit.**

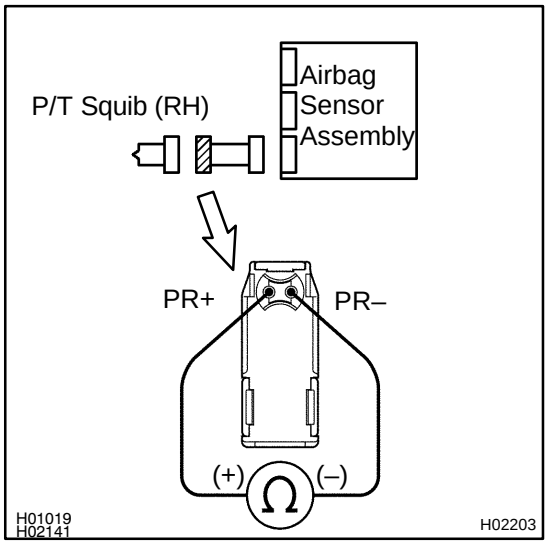

PREPARATION:

Release the airbag activation prevention mechanism of the connector (on the airbag sensor assembly side) between the airbag sensor assembly and the seat belt pretensioner (RH) (See page DI–490).

CHECK:

For the connector (on the seat belt pretensioner side) between the seat belt pretensioner (RH) and the airbag sensor assembly, measure the resistance between PR+ and PR–.

OK:

Resistance: 1 MΩ or Higher

NG → **Repair or replace harness or connector between seat belt pretensioner (RH) and airbag sensor assembly.**

OK

3	**Check airbag sensor assembly.**

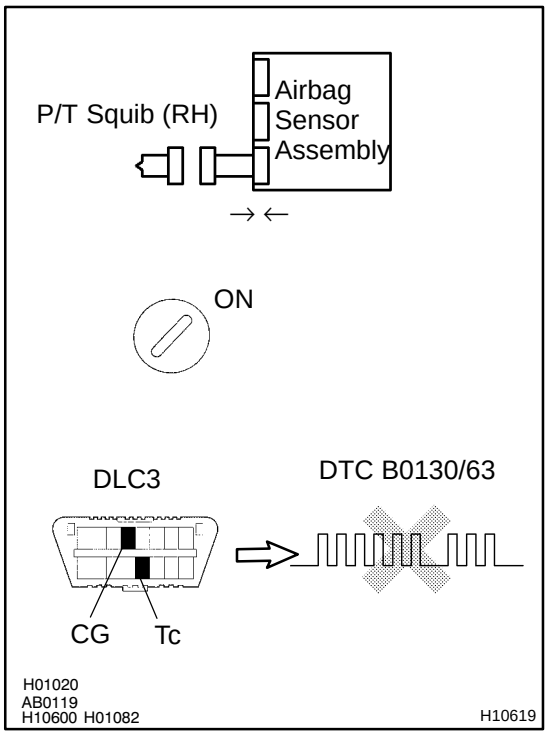

PREPARATION:

(a) Connect the connector to the airbag sensor assembly.
(b) Connect negative (–) terminal cable to the battery, and wait at least for 2 seconds.

CHECK:

(a) Turn ignition switch to ON and wait at least for 20 seconds.
(b) Clear DTC stored in memory (See page DI–490).
(c) Turn ignition switch to LOCK, and wait at least for 20 seconds.
(d) Turn ignition switch to ON, and wait at least for 20 seconds.
(e) Check DTC (See page DI–490).

OK:

DTC B0130/63 is not output.

HINT:
Codes other than code B0130/63 may be output at this time, but they are not relevant to this check.

NG → **Replace airbag sensor assembly.**

OK

4	Check P/T squib (RH).

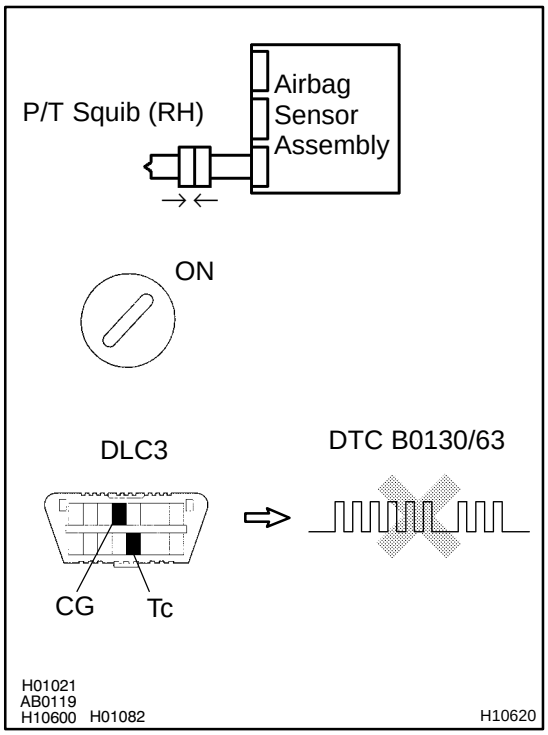

PREPARATION:

(a) Turn ignition switch to LOCK.
(b) Disconnect negative (–) terminal cable from the battery, and wait at least for 90 seconds.
(c) Connect the seat belt pretensioner (RH) connector.
(d) Connect negative (–) terminal cable to the battery, and wait at least for 2 seconds.

CHECK:

(a) Turn ignition switch to LOOK, and wait at least for 20 second.
(b) Turn ignition switch to ON, and wait at least for 20 seconds.
(c) Clear DTC stored in memory (See page DI–490).
(d) Turn ignition switch to LOCK, and wait at least for 20 seconds.
(e) Turn ignition switch to ON, and wait at least for 20 seconds.
(f) Check DTC (See page DI–490).

OK:

DTC B0130/63 is not output.

HINT:
Codes other than code B0130/63 may be output at this time, but they are not relevant to this check.

NG → **Replace seat belt pretensioner (RH).**

OK

From the results of the above inspection, the malfunctioning part can now be considered normal. To make sure of this, use the simulation method to check.

DI1BG–30

DTC	B0131/64	Open in P/T Squib (RH) Circuit

CIRCUIT DESCRIPTION

The P/T squib circuit (RH) consists of the airbag sensor assembly and seat belt pretensioner (RH).
It causes the SRS to deploy when the SRS deployment conditions are satisfied.
For details of the function of each component, see OPERATION on page RS–2.
DTC B0131/64 is recorded when an open is detected in the P/T squib (RH) circuit.

DTC No.	DTC Detecting Condition	Trouble Area
B0131/64	▲Open circuit in PR+ wire harness or PR– wire harness of squib ▲P/T squib (RH) malfunction ▲Airbag sensor assembly malfunction	▲Seat belt pretensioner (RH) ▲Airbag sensor assembly ▲Wire harness

WIRING DIAGRAM

See page DI–539.

INSPECTION PROCEDURE

1	**Prepare for inspection (See step 1 on page DI–580).**

2	**Check P/T squib (RH) circuit.**

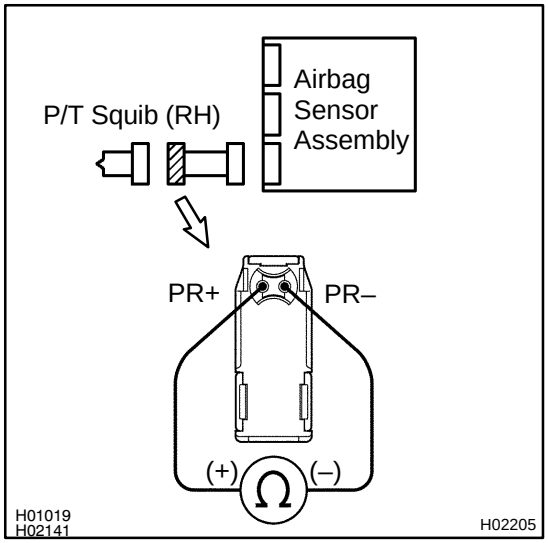

CHECK:

For the connector (on the seat belt pretensioner side) between the seat belt pretensioner (RH) and the airbag sensor assembly, measure the resistance between PR+ and PR–.

OK:

Resistance: Below 1 Ω

NG → **Repair or replace harness or connector between seat belt pretensioner (RH) and airbag sensor assembly.**

OK

3	Check airbag sensor assembly.

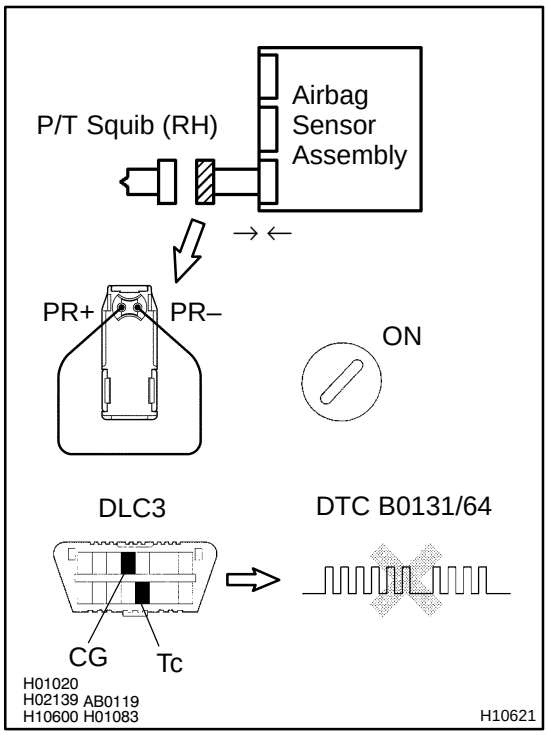

PREPARATION:

(a) Connect the connector to the airbag sensor assembly.

(b) Using a service wire, connect PR+ and PR– of the connector (on the seat belt pretensioner side) between the seat belt pretensioner (RH) and the airbag sensor assembly.

(c) Connect negative (–) terminal cable to the battery, and wait at least for 2 seconds.

CHECK:

(a) Turn ignition switch to ON and wait at least for 20 seconds.

(b) Clear DTC stored in memory (See page DI–490).

(c) Turn ignition switch to LOCK, and wait at least for 20 seconds.

(d) Turn ignition switch to ON, and wait at least for 20 seconds.

(e) Check DTC (See page DI–490).

OK:

DTC B0131/64 is not output.

HINT:

Codes other than code B0131/64 may be output at this time, but they are not relevant to this check.

NG	Replace airbag sensor assembly.

OK

4	Check P/T squib (RH).

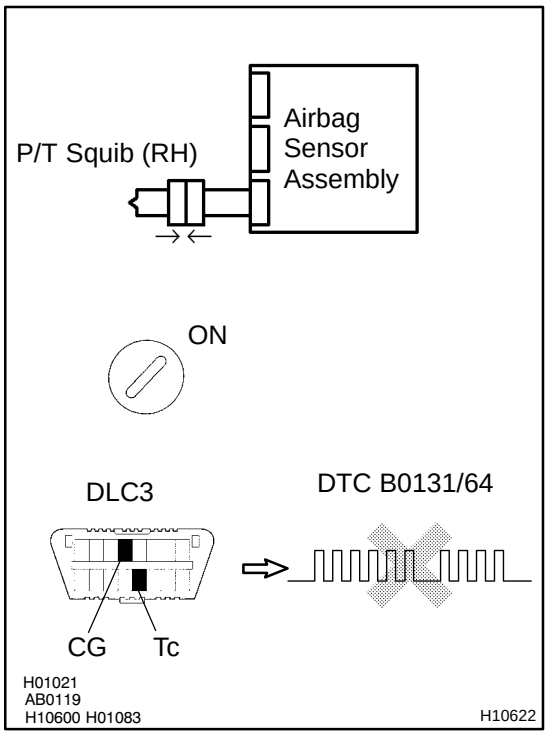

PREPARATION:

(a) Turn ignition switch to LOCK.
(b) Disconnect negative (–) terminal cable from the battery, and wait at least for 90 seconds.
(c) Connect the seat belt pretensioner (RH) connector.
(d) Connect negative (–) terminal cable to the battery, and wait at least for 2 seconds.

CHECK:

(a) Turn ignition switch to ON, and wait at least for 20 seconds.
(b) Clear DTC stored in memory (See page DI–490).
(c) Turn ignition switch to LOCK, and wait at least for 20 seconds.
(d) Turn ignition switch to ON, and wait at least for 20 seconds.
(e) Check DTC (See page DI–490).

OK:

DTC B0131/64 is not output.

HINT:

Codes other than code B0131/64 may be output at this time, but they are not relevant to this check.

NG	Replace seat belt pretensioner (RH).

OK

From the results of the above inspection, the malfunctioning part can now be considered normal. To make sure of this, use the simulation method to check.

DTC	B0132/61	Short in P/T Squib (RH) Circuit (to Ground)

CIRCUIT DESCRIPTION

The P/T squib (RH) circuit consists of the airbag sensor assembly and seat belt pretensioner (RH).
It causes the SRS to deploy when the SRS deployment conditions are satisfied.
For details of the function of each component, see OPERATION on page RS–2.
DTC B0132/61 is recorded when a ground short is detected in the P/T squib (RH) circuit.

DTC No.	DTC Detecting Condition	Trouble Area
B0132/61	▲Short circuit in P/T squib (RH) wire harness (to ground) ▲P/T squib (RH) malfunction ▲Airbag sensor assembly malfunction	▲Seat belt pretensioner (RH) ▲Airbag sensor assembly ▲Wire harness

WIRING DIAGRAM

See page DI–539.

INSPECTION PROCEDURE

1	**Prepare for inspection (See step 1 on page DI–580).**

2	**Check P/T squib (RH) circuit.**

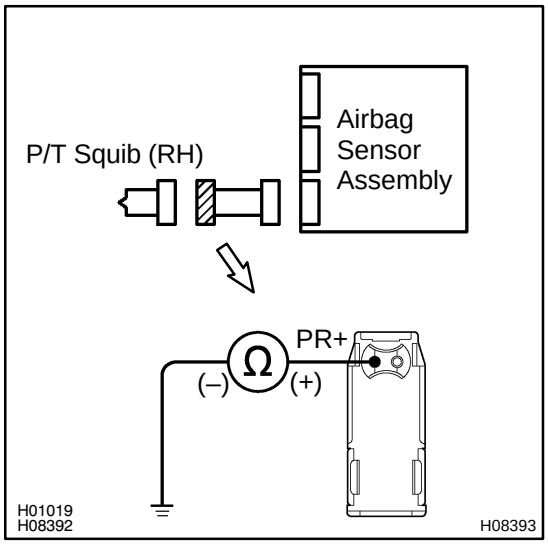

CHECK:

For the connector (on the seat belt pretensioner side) between the seat belt pretensioner (RH) and the airbag sensor assembly, measure the resistance between PR+ and body ground.

OK:

Resistance: 1 MΩ or Higher

NG → **Repair or replace harness or connector between seat belt pretensioner (RH) and airbag sensor assembly.**

OK

3	Check airbag sensor assembly.

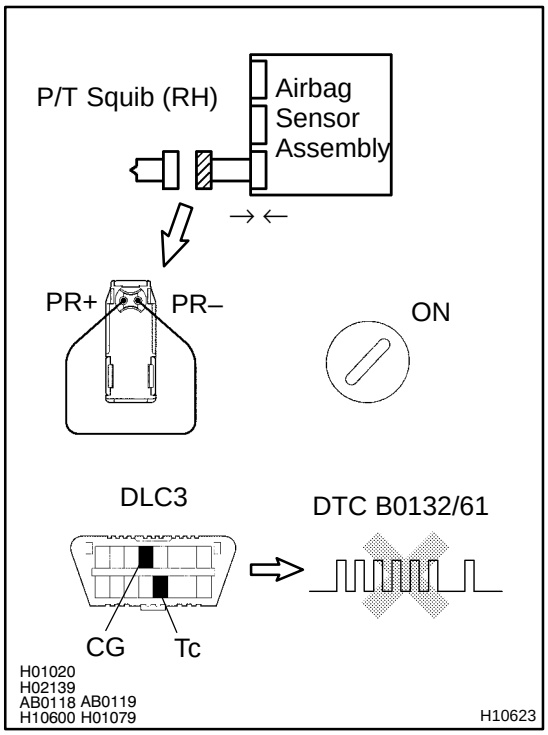

PREPARATION:

(a) Connect the connector to the airbag sensor assembly.

(b) Using a service wire, connect PR+ and PR– of the connector (on the seat belt pretensioner side) between the seat belt pretensioner (RH) and the airbag sensor assembly.

(c) Connect negative (–) terminal cable to the battery, and wait at least for 2 seconds.

CHECK:

(a) Turn ignition switch to ON and wait at least for 20 seconds.

(b) Clear DTC stored in memory
(See step 5 on page DI–490).

(c) Turn ignition switch to LOCK, and wait at least for 20 seconds.

(d) Turn ignition switch to ON, and wait at least for 20 seconds.

(e) Check DTC (See page DI–490).

OK:

DTC B0132/61 is not output.

HINT:

Codes other than code B0132/61 may be output at this time, but they are not relevant to this check.

NG	Replace airbag sensor assembly.

OK

4	Check P/T squib (RH).

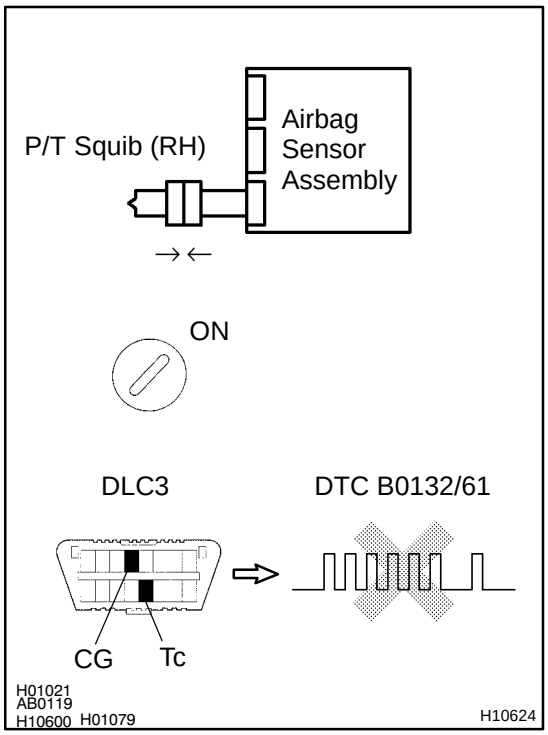

PREPARATION:

(a) Turn ignition switch to LOCK.
(b) Disconnect negative (–) terminal cable from the battery, and wait at least for 90 seconds.
(c) Connect the seat belt pretensioner (RH) connector.
(d) Connect negative (–) terminal cable to the battery, and wait at least for 2 seconds.

CHECK:

(a) Turn ignition switch to ON, and wait at least for 20 seconds.
(b) Clear DTC stored in memory
(See step 5 on page DI–490).
(c) Turn ignition switch to LOCK, and wait at least for 20 seconds.
(d) Turn ignition switch to ON, and wait at least for 20 seconds.
(e) Check DTC (See page DI–490).

OK:

DTC B0132/61 is not output.

HINT:
Codes other than code B0132/61 may be output at this time, but they are not relevant to this check.

NG → **Replace seat belt pretensioner (RH).**

OK

From the results of the above inspection, the malfunctioning part can now be considered normal. To make sure of this, use the simulation method to check. If the malfunctioning part can not be detected by the simulation method, replace all SRS components including the wire harness.

DI1BI–28

DTC	B0133/62	Short in P/T Squib (RH) Circuit (to B+)

CIRCUIT DESCRIPTION

The P/T squib (RH) circuit consists of the airbag sensor assembly and seat belt pretensioner (RH).
It causes the SRS to deploy when the SRS deployment conditions are satisfied.
For details of the function of each component, see OPERATION on page RS–2.
DTC B0133/62 is recorded when a B+ short is detected in the P/T squib (RH) circuit.

DTC No.	DTC Detecting Condition	Trouble Area
B0133/62	▲Short circuit in seat belt pretensioner (RH) wire harness (to B+) ▲P/T squib (RH) malfunction ▲Airbag sensor assembly malfunction	▲Seat belt pretensioner (RH) ▲Airbag sensor assembly ▲Wire harness

WIRING DIAGRAM

See page DI–539.

INSPECTION PROCEDURE

1	**Prepare for inspection (See step 1 on page DI–580).**

2	**Check P/T squib (RH) circuit.**

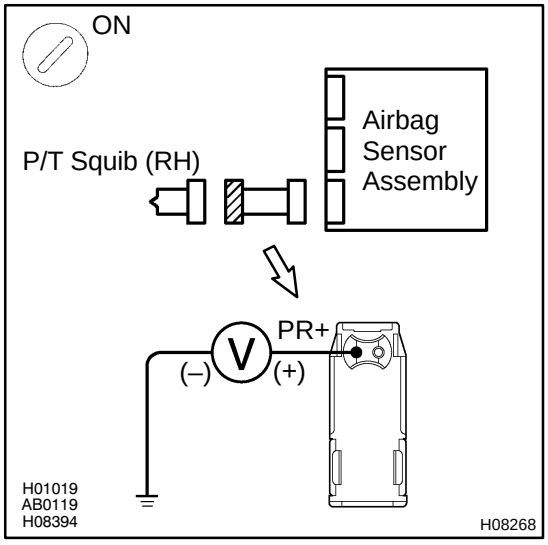

CHECK:

(a) Turn ignition switch to ON.

(b) For the connector (on the seat belt pretensioner side) between the seat belt pretensioner (RH) and the airbag sensor assembly, measure the voltage between PR+ and body ground.

OK:

Voltage: 0 V

NG → **Repair or replace harness or connector between seat belt pretensioner (RH) and airbag sensor assembly.**

OK

3	Check airbag sensor assembly.

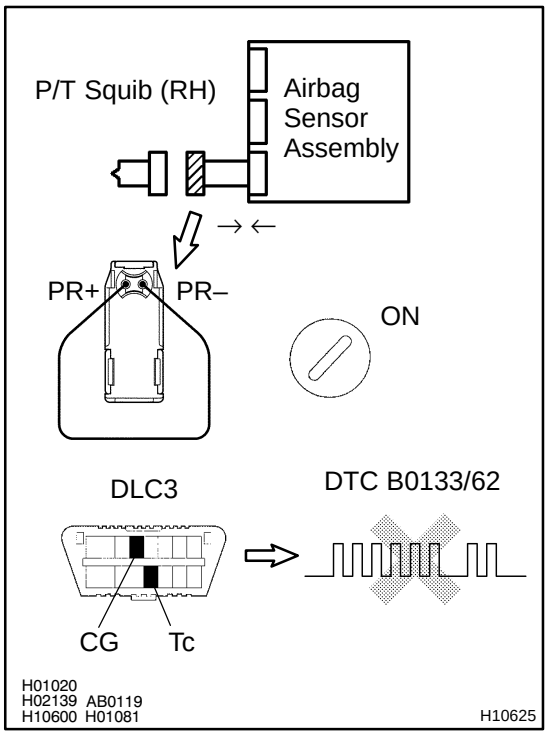

PREPARATION:

(a) Connect the connector to the airbag sensor assembly.

(b) Using a service wire, connect PR+ and PR– of the connector (on the seat belt pretensioner side) between the seat belt pretensioner (RH) and the airbag sensor assembly.

(c) Connect negative (–) terminal cable to the battery, and wait at least for 2 seconds.

CHECK:

(a) Turn ignition switch to ON and wait at least for 20 seconds.

(b) Clear DTC stored in memory
(See step 5 on page DI–490).

(c) Turn ignition switch to LOCK, and wait at least for 20 seconds.

(d) Turn ignition switch to ON, and wait at least for 20 seconds.

(e) Check DTC (See page DI–490).

OK:

DTC B0133/62 is not output.

HINT:

Codes other than code B0133/62 may be output at this time, but they are not relevant to this check.

NG	Replace airbag sensor assembly.

OK

4	Check P/T squib (RH).

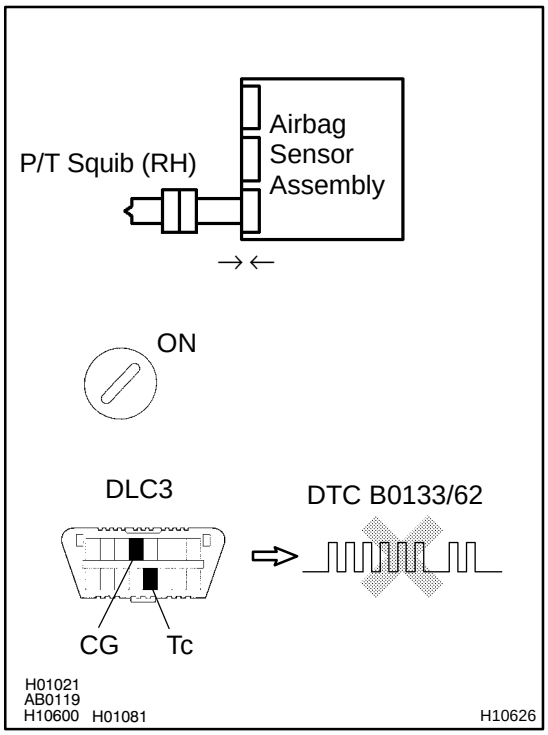

PREPARATION:

(a) Turn ignition switch to LOCK.
(b) Disconnect negative (–) terminal cable from the battery, and wait at least for 90 seconds.
(c) Connect the seat belt pretensioner (RH) connector.
(d) Connect negative (–) terminal cable to the battery, and wait at least for 2 seconds.

CHECK:

(a) Turn ignition switch to ON, and wait at least for 20 seconds.
(b) Clear DTC stored in memory
(See step 5 on page DI–490).
(c) Turn ignition switch to LOCK, and wait at least for 20 seconds.
(d) Turn ignition switch to ON, and wait at least for 20 seconds.
(e) Check DTC (See page DI–490).

OK:

DTC B0133/62 is not output.

HINT:
Codes other than code B0133/62 may be output at this time, but they are not relevant to this check.

NG → **Replace seat belt pretensioner (RH).**

OK

From the results of the above inspection, the malfunctioning part can now be considered normal. To make sure of this, use the simulation method to check. If the malfunctioning part can not be detected by the simulation method, replace all SRS components including the wire harness.

DI16W–48

DTC	B0135/73	Short in P/T Squib (LH) Circuit

CIRCUIT DESCRIPTION

The P/T squib (LH) circuit consists of the airbag sensor assembly and seat belt pretensioner (LH).
It causes the SRS to deploy when the SRS deployment conditions are satisfied.
For details of the function of each component, see OPERATION on page RS–2.
DTC B0135/73 is recorded when a short is detected in the P/T squib (LH) circuit.

DTC No.	DTC Detecting Condition	Trouble Area
B0135/73	▲Short circuit between PL+ wire harness and PL– wire harness of squib ▲P/T squib (LH) malfunction ▲Airbag sensor assembly malfunction	▲Seat belt pretensioner (LH) ▲Airbag sensor assembly ▲Wire harness

WIRING DIAGRAM

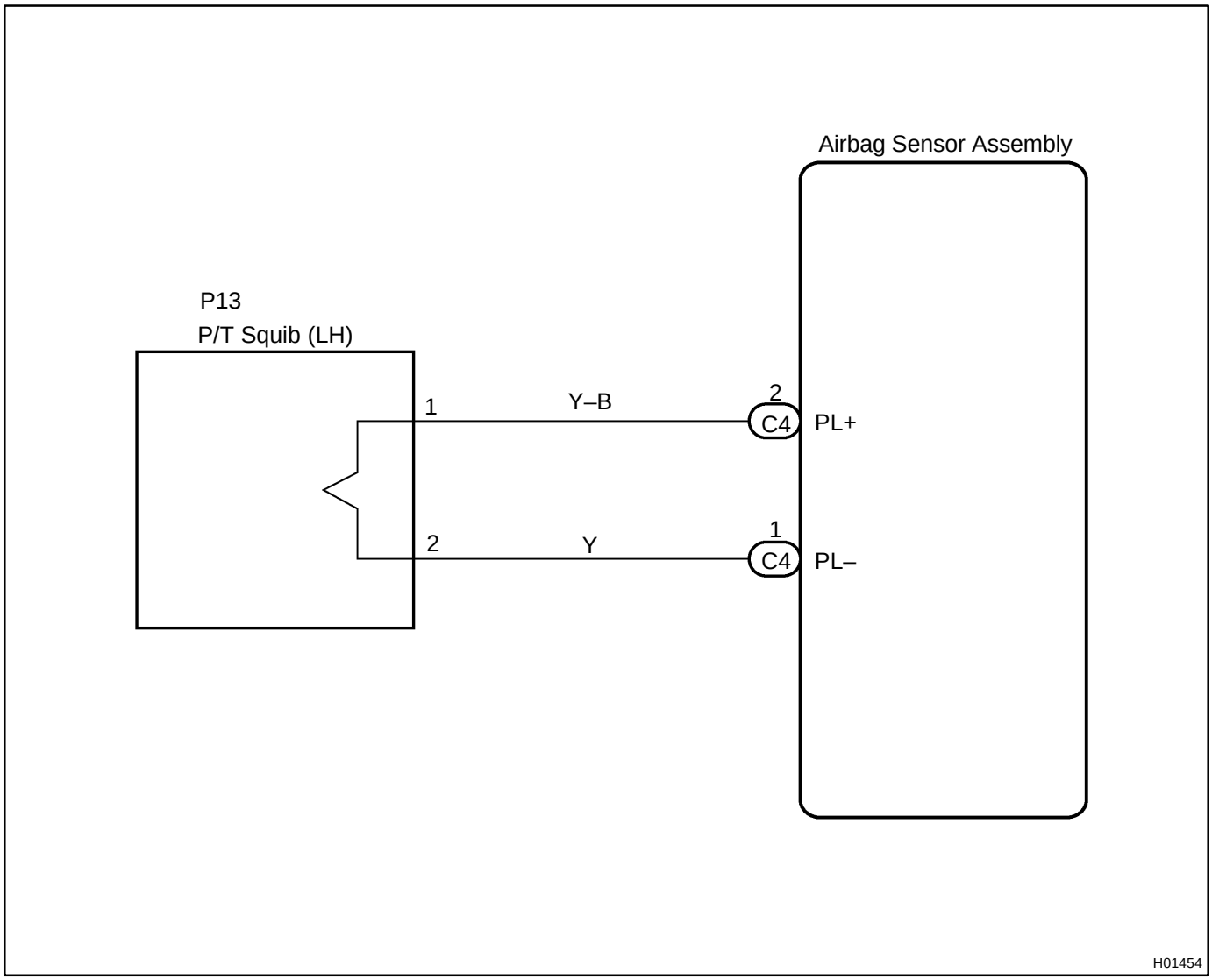

INSPECTION PROCEDURE

1	**Prepare for inspection (See step 1 on page DI–580).**

2	**Check P/T squib (LH) circuit.**

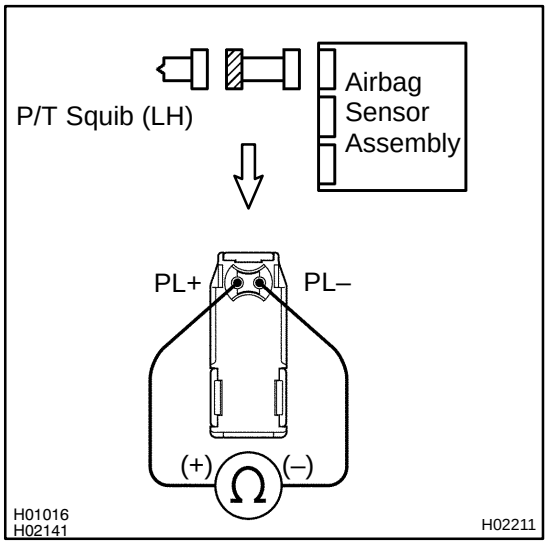

PREPARATION:

Release the airbag activation prevention mechanism of the connector (on the airbag sensor assembly side) between the airbag sensor assembly and the seat belt pretensioner (LH) (See page DI–490).

CHECK:

For the connector (on the seat belt pretensioner side) between the seat belt pretensioner (LH) and the airbag sensor assembly, measure the resistance between PL+ and PL–.

OK:

Resistance: 1 MΩ or Higher

NG → **Repair or replace harness or connector between seat belt pretensioner (LH) and airbag sensor assembly.**

OK

3	Check airbag sensor assembly.

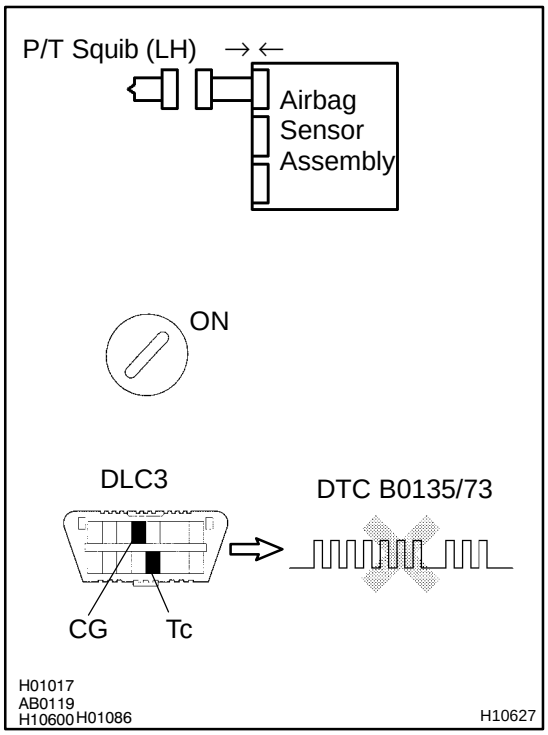

PREPARATION:

(a) Connect the connector to the airbag sensor assembly.
(b) Connect negative (–) terminal cable to the battery, and wait at least for 2 seconds.

CHECK:

(a) Turn ignition switch to ON and wait at least for 20 seconds.
(b) Clear DTC stored in memory (See page DI–490).
(c) Turn ignition switch to LOCK, and wait at least for 20 seconds.
(d) Turn ignition switch to ON, and wait at least for 20 seconds.
(e) Check DTC (See page DI–490).

OK:

DTC B0135/73 is not output.

HINT:
Codes other than code B0135/73 may be output at this time, but they are not relevant to this check.

NG → **Replace airbag sensor assembly.**

OK

4	Check P/T squib (LH).

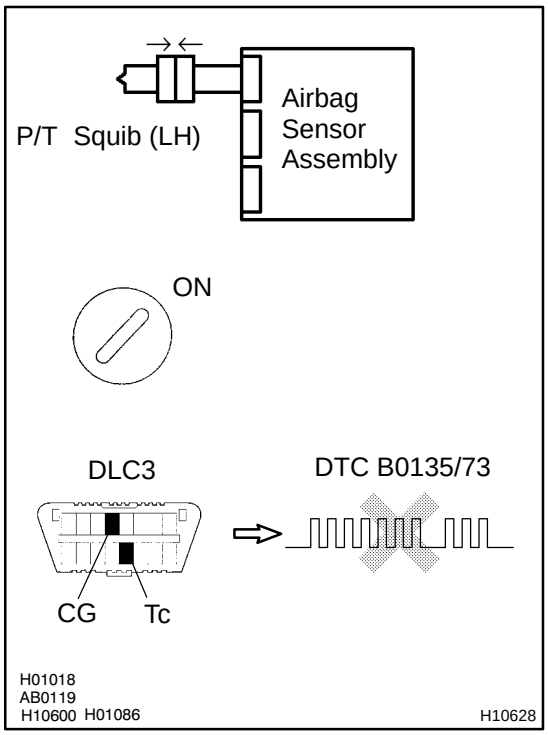

PREPARATION:

(a) Turn ignition switch to LOCK.
(b) Disconnect negative (–) terminal cable from the battery, and wait at least for 90 seconds.
(c) Connect the seat belt pretensioner (LH) connector.
(d) Connect negative (–) terminal cable to the battery, and wait at least for 2 seconds.

CHECK:

(a) Turn ignition switch to LOOK, and wait at least for 20 second.
(b) Turn ignition switch to ON, and wait at least for 20 seconds.
(c) Clear DTC stored in memory (See page DI–490).
(d) Turn ignition switch to LOCK, and wait at least for 20 seconds.
(e) Turn ignition switch to ON, and wait at least for 20 seconds.
(f) Check DTC (See page DI–490).

OK:

DTC B0135/73 is not output.

HINT:
Codes other than code B0135/73 may be output at this time, but they are not relevant to this check.

NG	Replace seat belt pretensioner (LH).

OK

From the results of the above inspection, the malfunctioning part can now be considered normal. To make sure of this, use the simulation method to check.

DI1BJ–31

DTC	B0136/74	Open in P/T Squib (LH) Circuit

CIRCUIT DESCRIPTION

The P/T squib circuit (LH) consists of the airbag sensor assembly and seat belt pretensioner (LH).
It causes the SRS to deploy when the SRS deployment conditions are satisfied.
For details of the function of each component, see OPERATION on page RS–2.
DTC B0136/74 is recorded when an open is detected in the P/T squib (LH) circuit.

DTC No.	DTC Detecting Condition	Trouble Area
B0136/74	▲Open circuit in PL+ wire harness or PL– wire harness of squib ▲P/T squib (LH) malfunction ▲Airbag sensor assembly malfunction	▲Seat belt pretensioner (LH) ▲Airbag sensor assembly ▲Wire harness

WIRING DIAGRAM

See page DI–552.

INSPECTION PROCEDURE

1	**Prepare for inspection (See step 1 on page DI–580).**

2	**Check P/T squib (LH) circuit.**

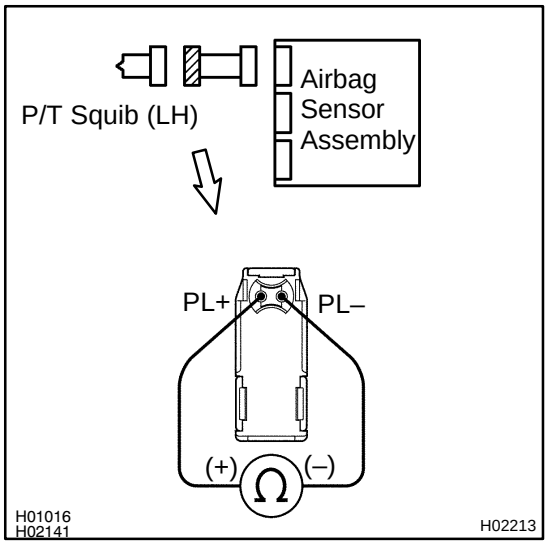

CHECK:

For the connector (on the seat belt pretensioner side) between the seat belt pretensioner (LH) and the airbag sensor assembly, measure the resistance between PL+ and PL–.

OK:

Resistance: Below 1 Ω

NG → **Repair or replace harness or connector between seat belt pretensioner (LH) and airbag sensor assembly.**

OK

3	Check airbag sensor assembly.

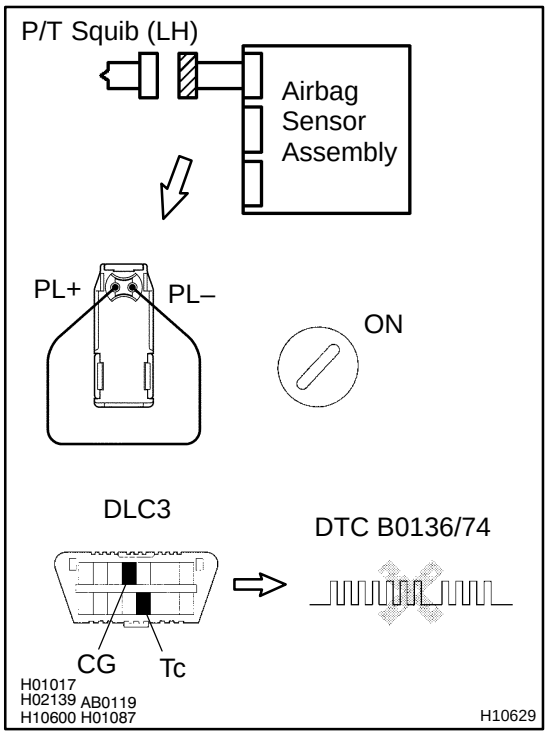

PREPARATION:

(a) Connect the connector to the airbag sensor assembly.
(b) Using a service wire, connect PL+ and PL– of the connector (on the seat belt pretensioner side) between the seat belt pretensioner (LH) and the airbag sensor assembly.
(c) Connect negative (–) terminal cable to the battery, and wait at least for 2 seconds.

CHECK:

(a) Turn ignition switch to ON and wait at least for 20 seconds.
(b) Clear DTC stored in memory (See page DI–490).
(c) Turn ignition switch to LOCK, and wait at least for 20 seconds.
(d) Turn ignition switch to ON, and wait at least for 20 seconds.
(e) Check DTC (See page DI–490).

OK:

DTC B0136/74 is not output.

HINT:

Codes other than code B0136/74 may be output at this time, but they are not relevant to this check.

NG	Replace airbag sensor assembly.

OK

4	Check P/T squib (LH).

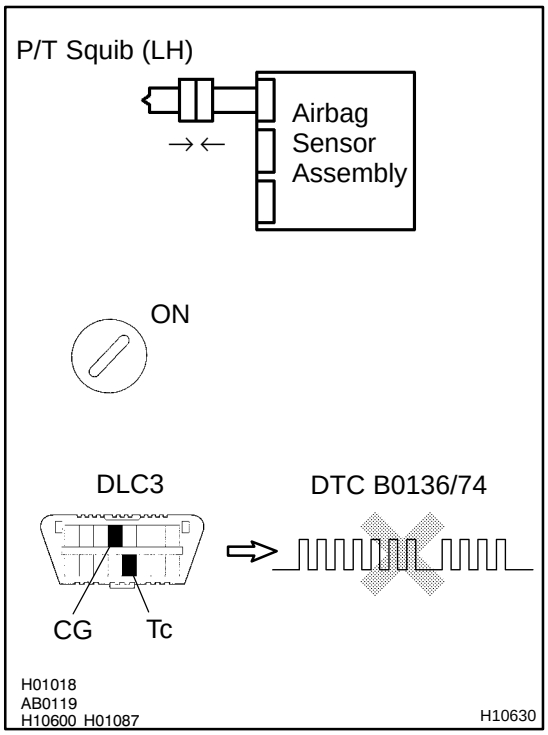

PREPARATION:

(a) Turn ignition switch to LOCK.
(b) Disconnect negative (–) terminal cable from the battery, and wait at least for 90 seconds.
(c) Connect the seat belt pretensioner (LH) connector.
(d) Connect negative (–) terminal cable to the battery, and wait at least for 2 seconds.

CHECK:

(a) Turn ignition switch to ON, and wait at least for 20 seconds.
(b) Clear DTC stored in memory (See page DI–490).
(c) Turn ignition switch to LOCK, and wait at least for 20 seconds.
(d) Turn ignition switch to ON, and wait at least for 20 seconds.
(e) Check DTC (See page DI–490).

OK:

DTC B0136/74 is not output.

HINT:

Codes other than code B0136/74 may be output at this time, but they are not relevant to this check.

NG → **Replace seat belt pretensioner (LH).**

OK →

From the results of the above inspection, the malfunctioning part can now be considered normal. To make sure of this, use the simulation method to check.

DTC	B0137/71	Short in P/T Squib (LH) Circuit (to Ground)

CIRCUIT DESCRIPTION

The P/T squib (LH) circuit consists of the airbag sensor assembly and seat belt pretensioner (LH).
It causes the SRS to deploy when the SRS deployment conditions are satisfied.
For details of the function of each component, see OPERATION on page RS–2.
DTC B0137/71 is recorded when a ground short is detected in the P/T squib (LH) circuit.

DTC No.	DTC Detecting Condition	Trouble Area
B0137/71	▲Short circuit in P/T squib (LH) wire harness (to ground) ▲P/T squib (LH) malfunction ▲Airbag sensor assembly malfunction	▲Seat belt pretensioner (LH) ▲Airbag sensor assembly ▲Wire harness

WIRING DIAGRAM

See page DI–552.

INSPECTION PROCEDURE

1	**Prepare for inspection (See step 1 on page DI–580).**

2	**Check P/T squib (LH) circuit.**

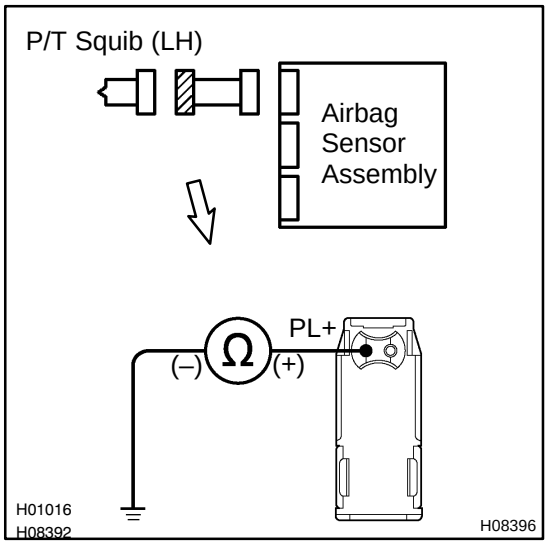

CHECK:

For the connector (on the seat belt pretensioner side) between the seat belt pretensioner (LH) and the airbag sensor assembly, measure the resistance between PL+ and body ground.

OK:

Resistance: 1 MΩ or Higher

NG → **Repair or replace harness or connector between seat belt pretensioner (LH) and airbag sensor assembly.**

OK

3	Check airbag sensor assembly.

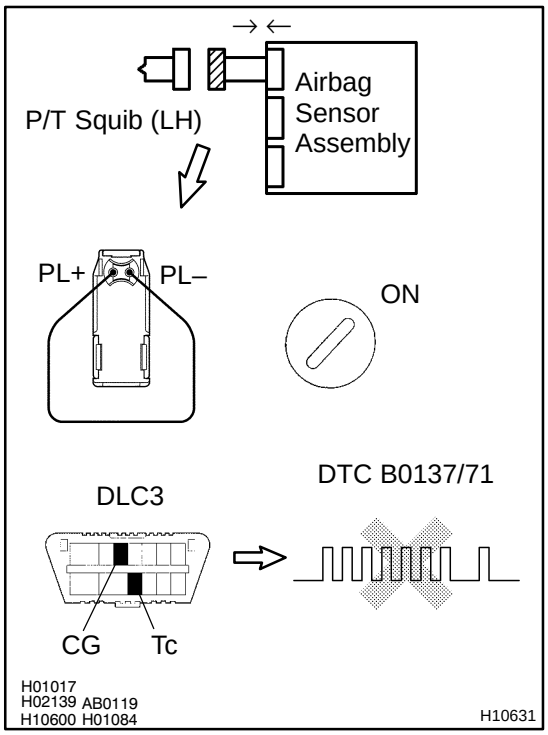

PREPARATION:

(a) Connect the connector to the airbag sensor assembly.
(b) Using a service wire, connect PL+ and PL– of the connector (on the seat belt pretensioner side) between the seat belt pretensioner (LH) and the airbag sensor assembly.
(c) Connect negative (–) terminal cable to the battery, and wait at least for 2 seconds.

CHECK:

(a) Turn ignition switch to ON and wait at least for 20 seconds.
(b) Clear DTC stored in memory
(See step 5 on page DI–490).
(c) Turn ignition switch to LOCK, and wait at least for 20 seconds.
(d) Turn ignition switch to ON, and wait at least for 20 seconds.
(e) Check DTC (See page DI–490).

OK:

DTC B0137/71 is not output.

HINT:
Codes other than code B0137/71 may be output at this time, but they are not relevant to this check.

NG → **Replace airbag sensor assembly.**

OK

4	Check P/T squib (LH).

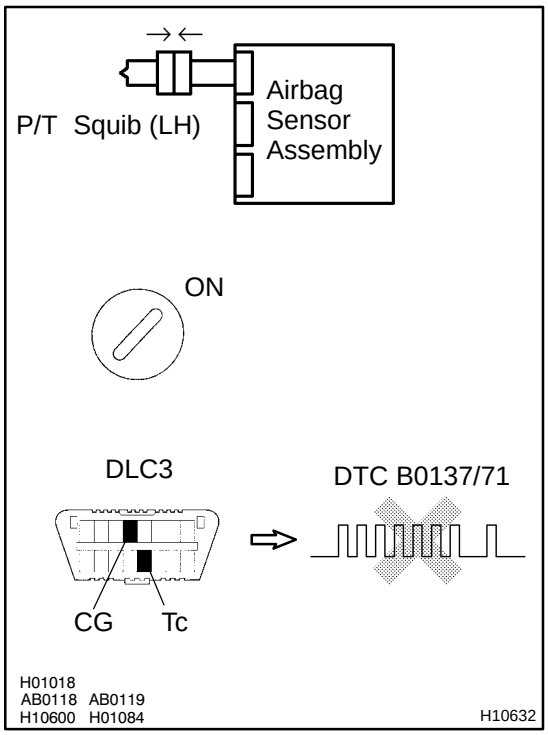

PREPARATION:

(a) Turn ignition switch to LOCK.
(b) Disconnect negative (–) terminal cable from the battery, and wait at least for 90 seconds.
(c) Connect the seat belt pretensioner (LH) connector.
(d) Connect negative (–) terminal cable to the battery, and wait at least for 2 seconds.

CHECK:

(a) Turn ignition switch to ON, and wait at least for 20 seconds.
(b) Clear DTC stored in memory
(See step 5 on page DI–490).
(c) Turn ignition switch to LOCK, and wait at least for 20 seconds.
(d) Turn ignition switch to ON, and wait at least for 20 seconds.
(e) Check DTC (See page DI–490).

OK:

DTC B0137/71 is not output.

HINT:
Codes other than code B0137/71 may be output at this time, but they are not relevant to this check.

NG → **Replace seat belt pretensioner (LH).**

OK

From the results of the above inspection, the malfunctioning part can now be considered normal. To make sure of this, use the simulation method to check. If the malfunctioning part can not be detected by the simulation method, replace all SRS components including the wire harness.

DTC	B0138/72	Short in P/T Squib (LH) Circuit (to B+)

CIRCUIT DESCRIPTION

The P/T squib (LH) circuit consists of the airbag sensor assembly and seat belt pretensioner (LH).
It causes the SRS to deploy when the SRS deployment conditions are satisfied.
For details of the function of each component, see OPERATION on page RS–2.
DTC B0138/72 is recorded when a B+ short is detected in the P/T squib (LH) circuit.

DTC No.	DTC Detecting Condition	Trouble Area
B0138/72	▲Short circuit in seat belt pretensioner (LH) wire harness (to B+) ▲P/T squib (LH) malfunction ▲Airbag sensor assembly malfunction	▲Seat belt pretensioner (LH) ▲Airbag sensor assembly ▲Wire harness

WIRING DIAGRAM

See page DI–552.

INSPECTION PROCEDURE

1	**Prepare for inspection (See step 1 on page DI–580).**

2	**Check P/T squib (LH) circuit.**

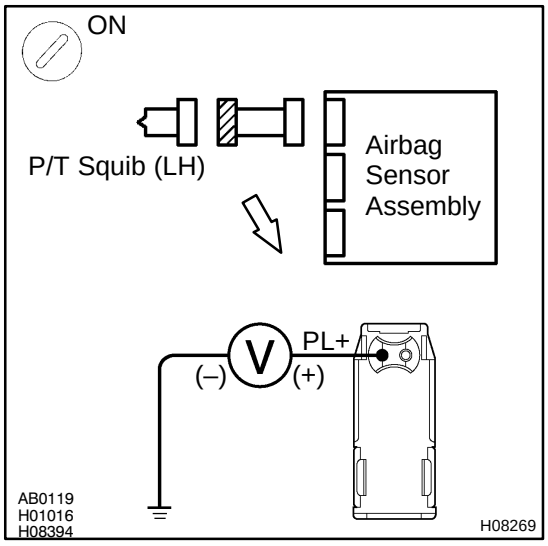

CHECK:

(a) Turn ignition switch to ON.

(b) For the connector (on the seat belt pretensioner side) between the seat belt pretensioner (LH) and the airbag sensor assembly, measure the voltage between PL+ and body ground.

OK:

Voltage: 0 V

NG → **Repair or replace harness or connector between seat belt pretensioner (LH) and airbag sensor assembly.**

OK

3	Check airbag sensor assembly.

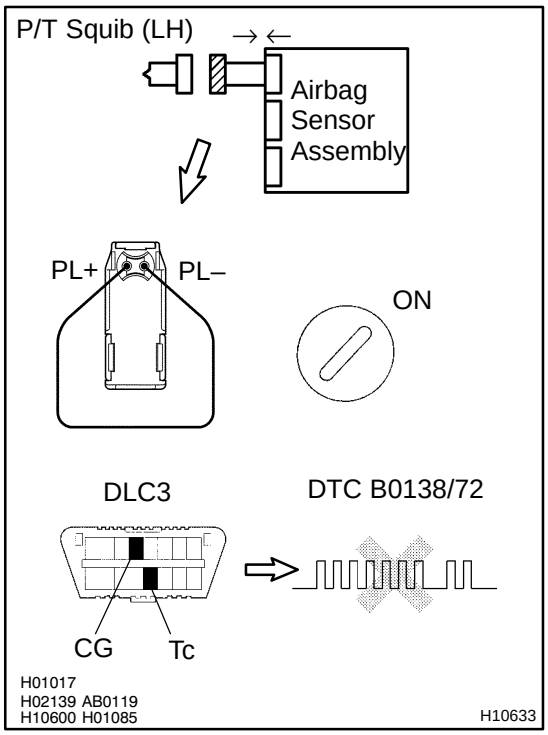

PREPARATION:

(a) Connect the connector to the airbag sensor assembly.
(b) Using a service wire, connect PL+ and PL– of the connector (on the seat belt pretensioner side) between the seat belt pretensioner (LH) and the airbag sensor assembly.
(c) Connect negative (–) terminal cable to the battery, and wait at least for 2 seconds.

CHECK:

(a) Turn ignition switch to ON and wait at least for 20 seconds.
(b) Clear DTC stored in memory
(See step 5 on page DI–490).
(c) Turn ignition switch to LOCK, and wait at least for 20 seconds.
(d) Turn ignition switch to ON, and wait at least for 20 seconds.
(e) Check DTC (See page DI–490).

OK:

DTC B0138/72 is not output.

HINT:
Codes other than code B0138/72 may be output at this time, but they are not relevant to this check.

NG	Replace airbag sensor assembly.

OK

4	Check P/T squib (LH).

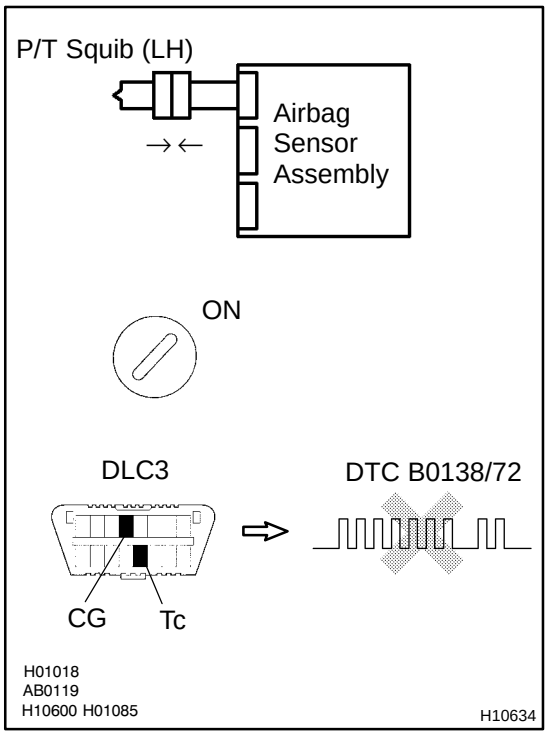

PREPARATION:

(a) Turn ignition switch to LOCK.
(b) Disconnect negative (–) terminal cable from the battery, and wait at least for 90 seconds.
(c) Connect the seat belt pretensioner (LH) connector.
(d) Connect negative (–) terminal cable to the battery, and wait at least for 2 seconds.

CHECK:

(a) Turn ignition switch to ON, and wait at least for 20 seconds.
(b) Clear DTC stored in memory
(See step 5 on page DI–490).
(c) Turn ignition switch to LOCK, and wait at least for 20 seconds.
(d) Turn ignition switch to ON, and wait at least for 20 seconds.
(e) Check DTC (See page DI–490).

OK:

DTC B0138/72 is not output.

HINT:
Codes other than code B0138/72 may be output at this time, but they are not relevant to this check.

NG → **Replace seat belt pretensioner (LH).**

OK

From the results of the above inspection, the malfunctioning part can now be considered normal. To make sure of this, use the simulation method to check. If the malfunctioning part can not be detected by the simulation method, replace all SRS components including the wire harness.

DI1BM–37

DTC	B1100/31	Airbag Sensor Assembly Malfunction

CIRCUIT DESCRIPTION

The airbag sensor assembly consists of a airbag sensor, safing sensor, drive circuit, diagnosis circuit and ignition control, etc.
It receives signals from the airbag sensor, judges whether or not the SRS must be activated, and detects diagnosis system malfunction.
DTC B1100/31 is recorded when occurrence of a malfunction in the airbag sensor assembly is detected.

DTC No.	DTC Detecting Condition	Trouble Area
B1100/31	▲Airbag sensor assembly malfunction	▲Airbag sensor assembly

INSPECTION PROCEDURE

HINT:
When a malfunction code other than code B1100/31 is displayed at the same time, first repair the malfunction indicated by the malfunction code other than code B1100/31.

1	**Prepare for inspection (See step 1 on page DI–580).**

2	**Check voltage at IG2 and ACC of airbag sensor assembly.**

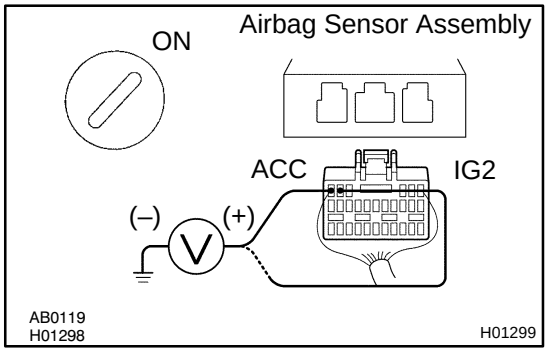

CHECK:

(a) Turn ignition switch to ON.
(b) Measure the voltage between body ground and each of terminals IG2 and ACC of the airbag sensor assembly connector.

OK:

Voltage: 10 – 14 V

NG → **Check that an abnormality occurs on the battery and charging system.**

OK

3	Is DTC B1100/31 output again?

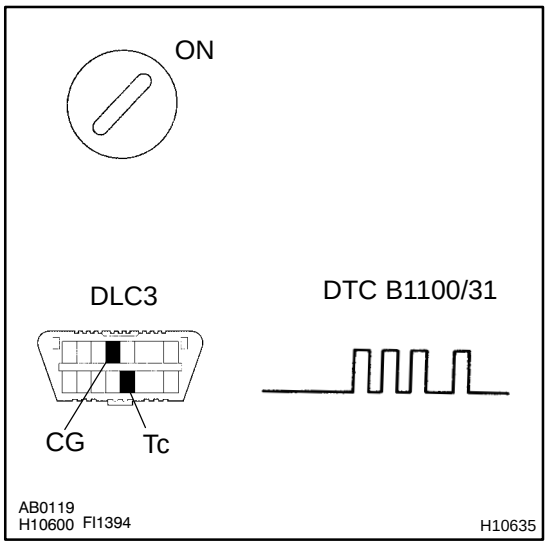

PREPARATION:

Clear DTC (See step 5 on page DI–490).

CHECK:

(a) Turn ignition switch to LOCK, and wait at least for 20 seconds.

(b) Turn ignition switch to ON, and wait at least for 20 seconds.

(c) Repeat operation in step (a) and (b) at least 5 times.

(d) Check DTC (See page DI–490).

HINT:

Codes other than code B1100/31 may be output at this time, but they are not relevant to this check.

NO → **Using simulation method, reproduce malfunction symptoms (See page IN–17).**

YES

Replace airbag sensor assembly.

DI65X–05

DTC	B1156/B1157/15	Front Airbag Sensor (RH) Malfunction

CIRCUIT DESCRIPTION

The front airbag sensor (RH) circuit consists of the airbag sensor assembly and front airbag sensor (RH). For details of the function of each component, see OPERATION on page RS–2.

DTC B1156/B1157/15 is recorded when malfunction is detected in the front airbag sensor (RH) circuit.

DTC No.	DTC Detecting Condition	Trouble Area
B1156/B1157/15	▲Front airbag sensor (RH) malfunction	▲Front airbag sensor (RH) ▲Airbag sensor assembly ▲Wire harness

WIRING DIAGRAM

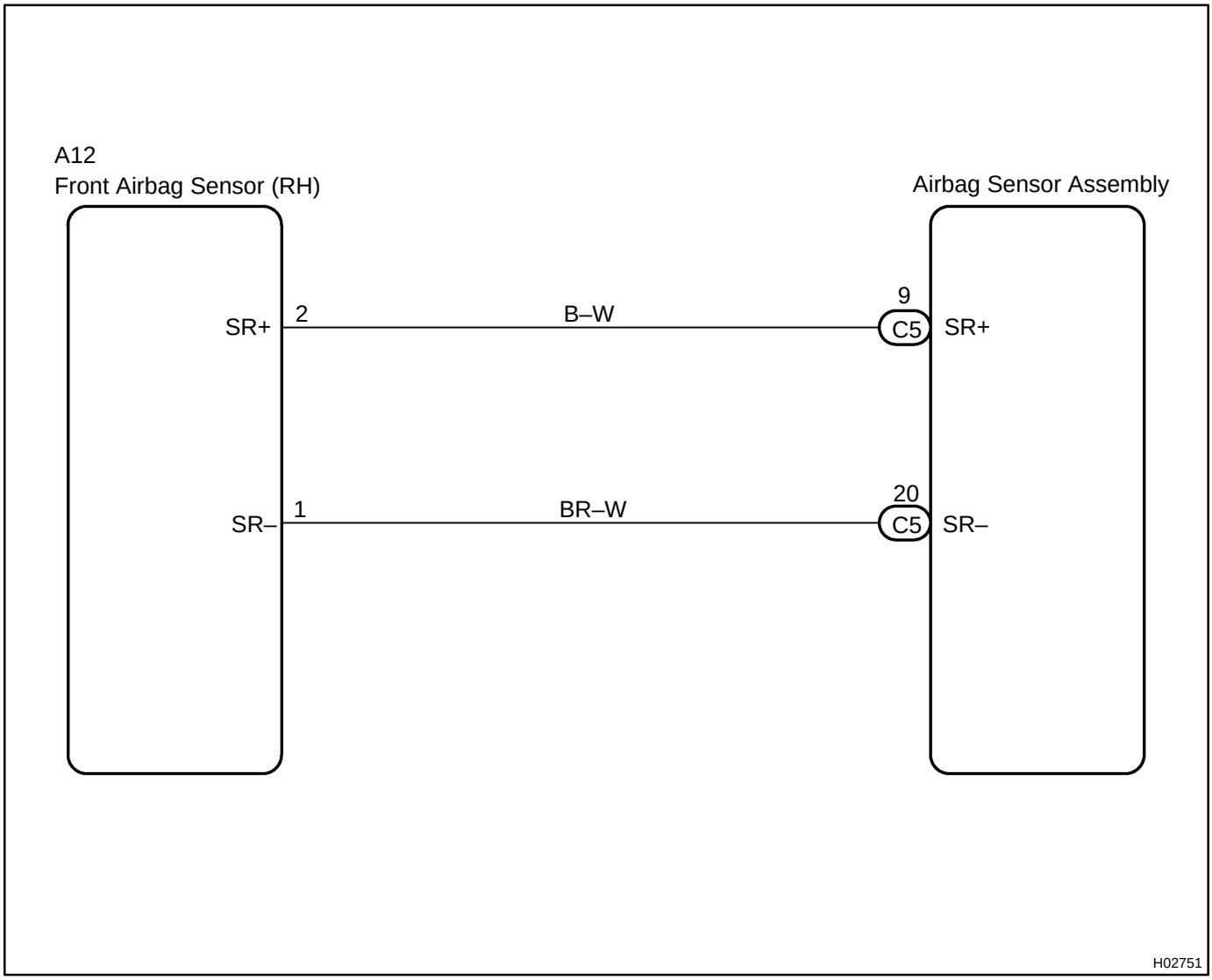

INSPECTION PROCEDURE

1	**Prepare for inspection (See step 1 on page DI–580).**

2	**Check wire harness (to B+).**

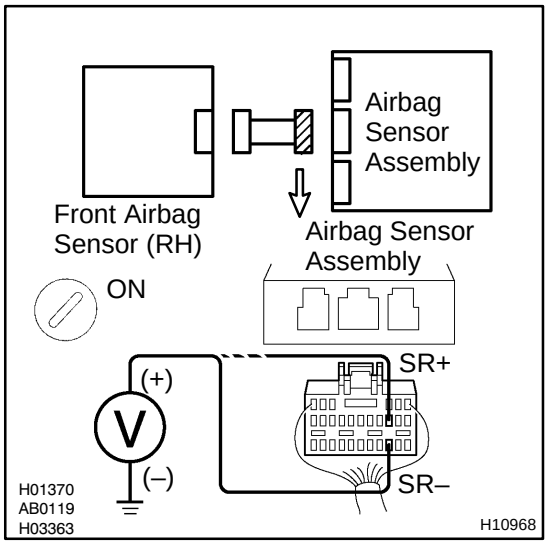

CHECK:

(a) Turn ignition switch to ON.

(b) For the connector (on the airbag sensor assembly side) between the front airbag sensor (RH) and the airbag sensor assembly, measure the voltage between body ground and each of SR+ and SR–.

OK:

Voltage: Below 1 V

NG → **Repair or replace harness or connector between front airbag sensor (RH) and airbag sensor assembly.**

OK

3	**Check wire harness (to ground).**

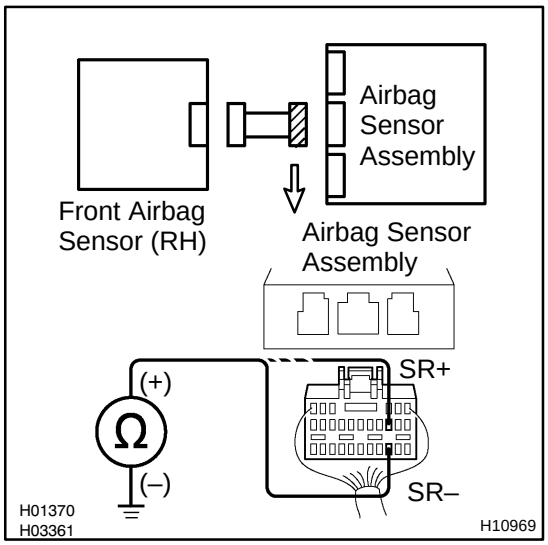

CHECK:

For the connector (on the airbag sensor assembly side) between the front airbag sensor (RH) and the airbag sensor assembly, measure the resistance between body ground and each of SR+ and SR–.

OK:

Resistance: 1 MΩ or Higher

NG → **Repair or replace harness or connector between front airbag sensor (RH) and airbag sensor assembly.**

OK

4	Check wire harness.

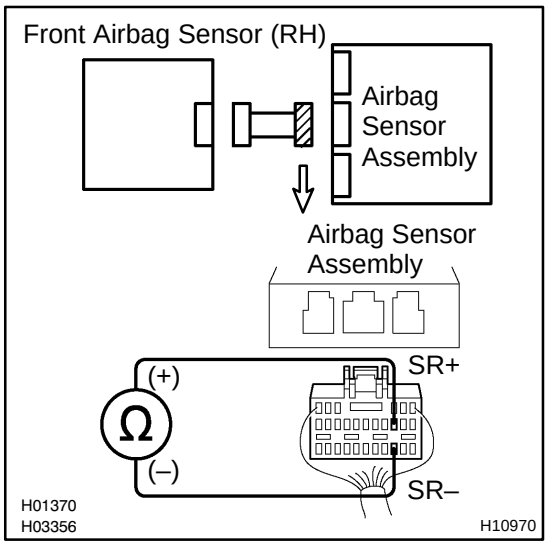

CHECK:

For the connector (on the airbag sensor assembly side) between the front airbag sensor (RH) and the airbag sensor assembly, measure the resistance between SR+ and SR–.

OK:

Resistance: 1 MΩ or Higher

NG → **Repair or replace harness or connector between front airbag sensor (RH) and airbag sensor assembly.**

OK

5	Check wire harness.

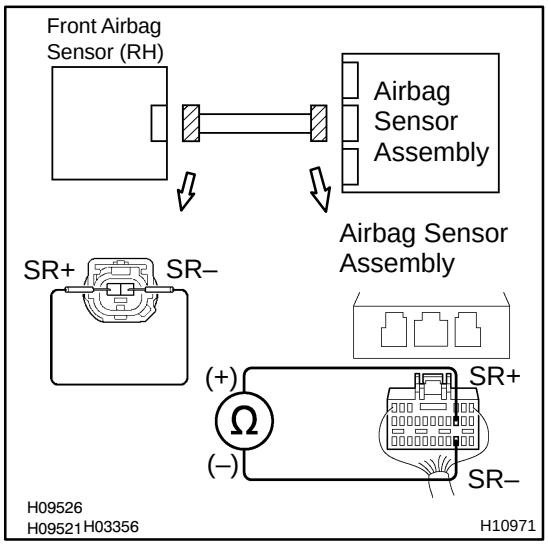

PREPARATION:

Using a service wire, connect SR+ and SR– of the connector (on the front airbag sensor (RH) side) between the airbag sensor assembly and the front airbag sensor (RH).

CHECK:

For the connector (on the airbag sensor assembly side) between the front airbag sensor (RH) and the airbag sensor assembly, measure the resistance between SR+ and SR–.

OK:

Resistance: Below 1 Ω

NG → **Repair or replace harness or connector between front airbag sensor (RH) and airbag sensor assembly.**

OK

6	Check front airbag sensor (RH).

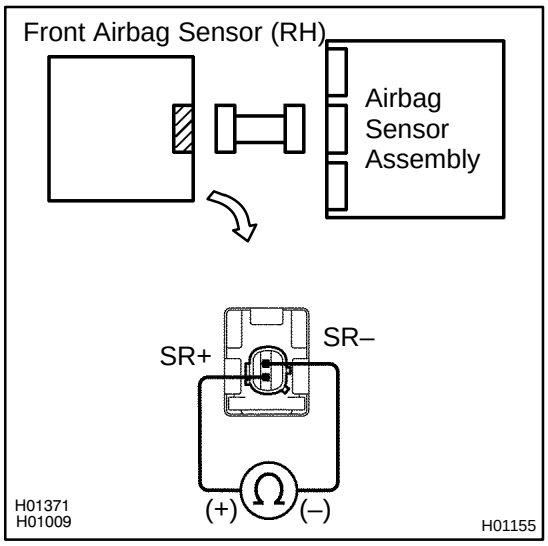

CHECK:.

For the connector (on the front airbag sensor (RH)), measure the resistance between SR+ and SR–.

OK:

Resistance: 300 – 1500 Ω

NG → **Replace front airbag sensor (RH).**

OK

7	Check airbag sensor assembly.

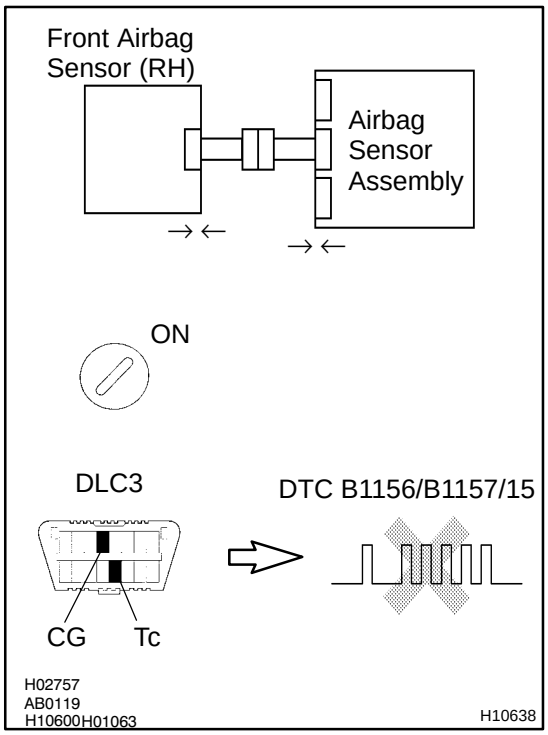

PREPARATION:

(a) Turn ignition switch to LOCK.
(b) Disconnect negative (–) terminal cable from the battery, and wait at least for 90 seconds.
(c) Connect the front airbag sensor (RH) connector and airbag sensor assembly connector.
(d) Connect negative (–) terminal cable to the battery, and wait at least for 2 seconds.

CHECK:

(a) Turn ignition switch to ON, and wait at least for 20 seconds.
(b) Clear DTC stored in memory (See page DI–490).
(c) Turn ignition switch to LOCK, and wait at least for 20 seconds.
(d) Turn ignition switch to ON, and wait at least for 20 seconds.
(e) Check DTC (See page DI–490).

OK:

DTC B1156/B1157/15 is not output.

HINT:

Codes other than code B1156/B1157/15 may be output at this time, but they are not relevant to this check.

NG	Replace airbag sensor assembly.

OK

From the results of the above inspection, the malfunctioning part can now be considered normal. To make sure of this, use the simulation method to check.

DI65Y–05

DTC	B1158/B1159/16	Front Airbag Sensor (LH) Malfunction

CIRCUIT DESCRIPTION

The front airbag sensor (LH) circuit consists of the airbag sensor assembly and front airbag sensor (LH).
For details of the function of each component, see OPERATION on page RS–2.
DTC B1158/B1159/16 is recorded when malfunction is detected in the front airbag sensor (LH) circuit.

DTC No.	DTC Detecting Condition	Trouble Area
B1158/B1159/16	▲Front airbag sensor (LH) malfunction	▲Front airbag sensor (LH) ▲Wire harness ▲Airbag sensor assembly ▲Engine room main wire harness

WIRING DIAGRAM

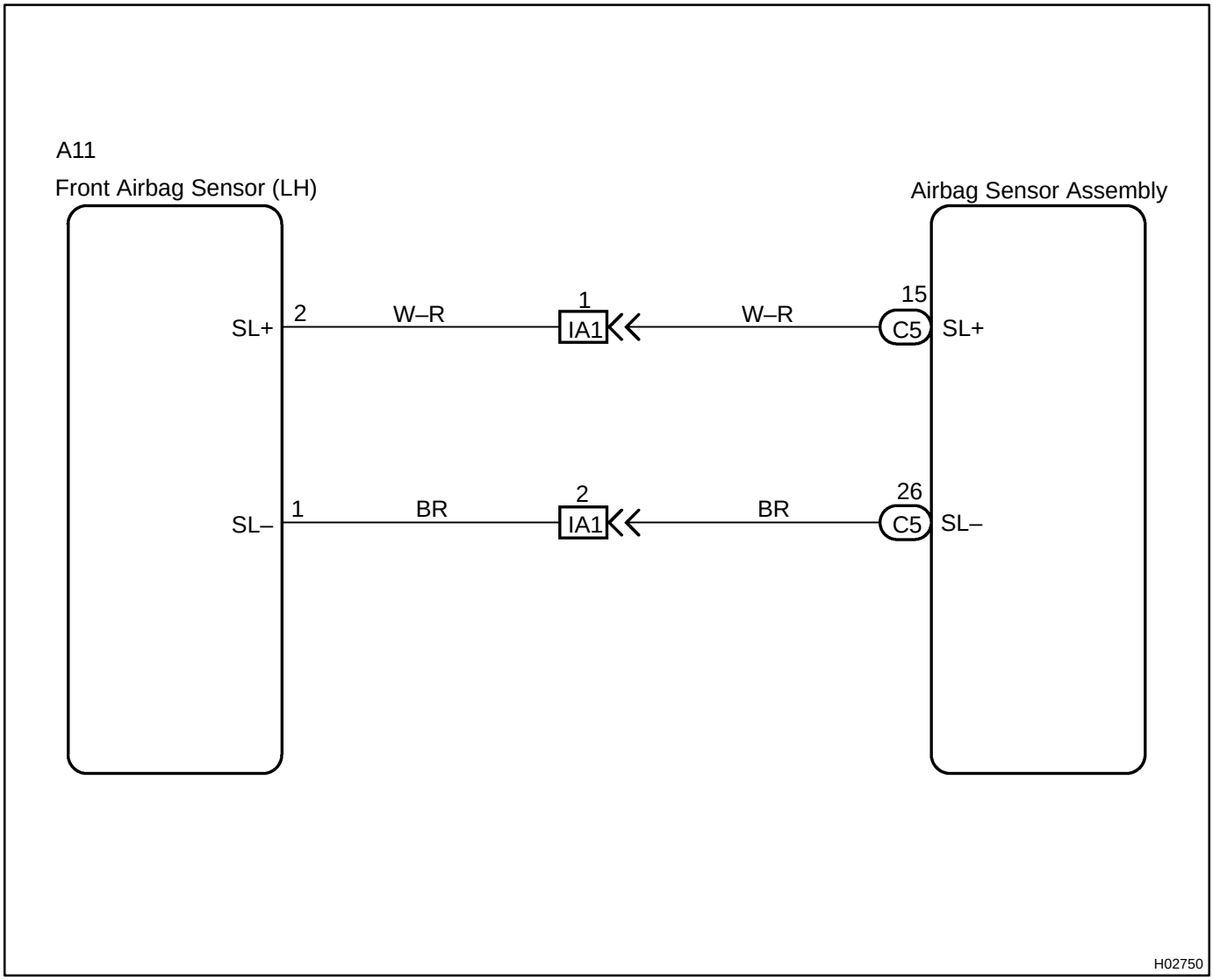

INSPECTION PROCEDURE

1	**Prepare for inspection (See step 1 on page DI–580).**

2	**Check wire harness (to B+).**

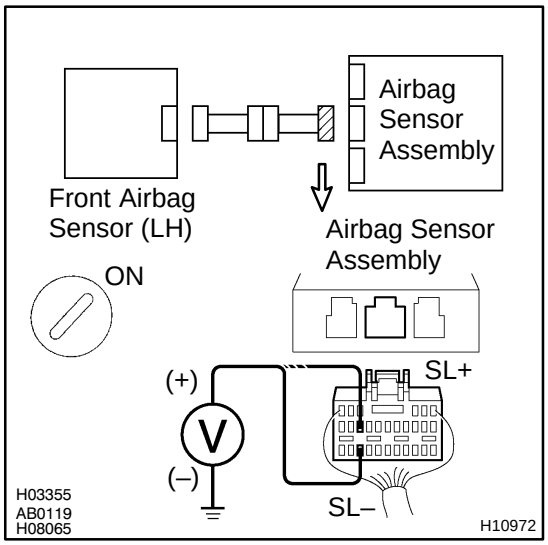

CHECK:

(a) Turn ignition switch to ON.

(b) For the connector (on the airbag sensor assembly side) between the front airbag sensor (LH) and the airbag sensor assembly, measure the voltage between body ground and each of SL+ and SL–.

OK:

Voltage: Below 1 V

NG → **Go to step 8.**

OK

3	**Check wire harness (to ground).**

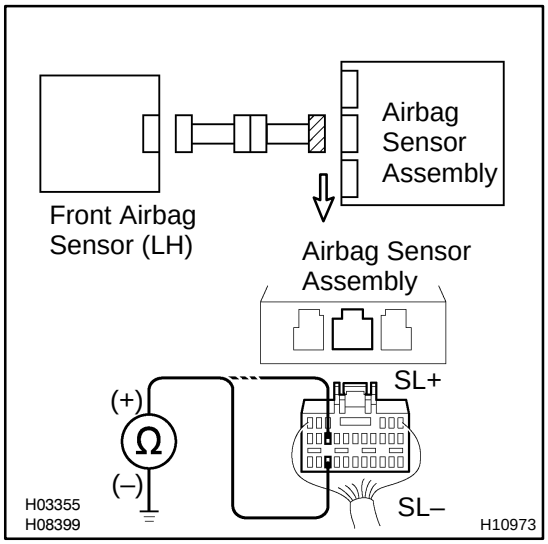

CHECK:

For the connector (on the airbag sensor assembly side) between the front airbag sensor (LH) and the airbag sensor assembly, measure the resistance between body ground and each of SL+ and SL–.

OK:

Resistance: 1 MΩ or Higher

NG → **Go to step 9.**

OK

4	Check wire harness.

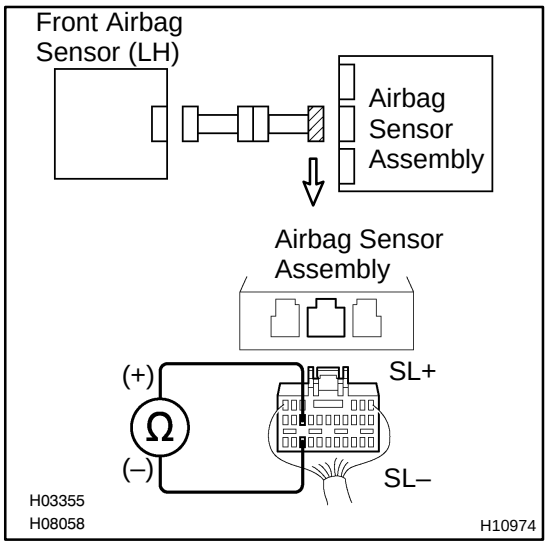

CHECK:

For the connector (on the airbag sensor assembly side) between the front airbag sensor (LH) and the airbag sensor assembly, measure the resistance between SL+ and SL–.

OK:

Resistance: 1 MΩ or Higher

NG → **Go to step 10.**

OK

5	Check wire harness.

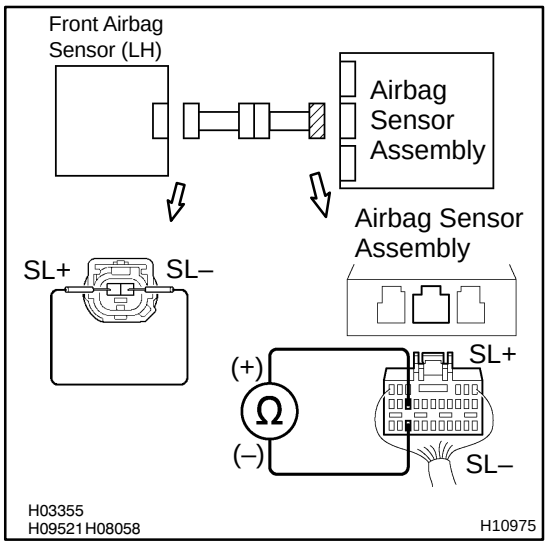

PREPARATION:

Using a service wire, connect SL+ and SL– of the connector (on the front airbag sensor (LH) side) between the airbag sensor assembly and the front airbag sensor (LH).

CHECK:

For the connector (on the airbag sensor assembly side) between the front airbag sensor (LH) and the airbag sensor assembly, measure the resistance between SL+ and SL–.

OK:

Resistance: Below 1 Ω

NG → **Go to step 11.**

OK

6	Check front airbag sensor (LH).

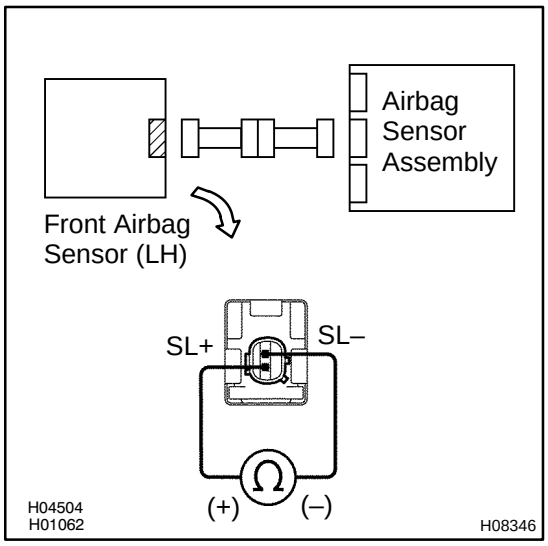

CHECK:

For the connector (on the front airbag sensor (LH)), measure the resistance between SL+ and SL–.

OK:

Resistance: 300 – 1500 Ω

NG → **Replace front airbag sensor (LH).**

OK

7	Check airbag sensor assembly.

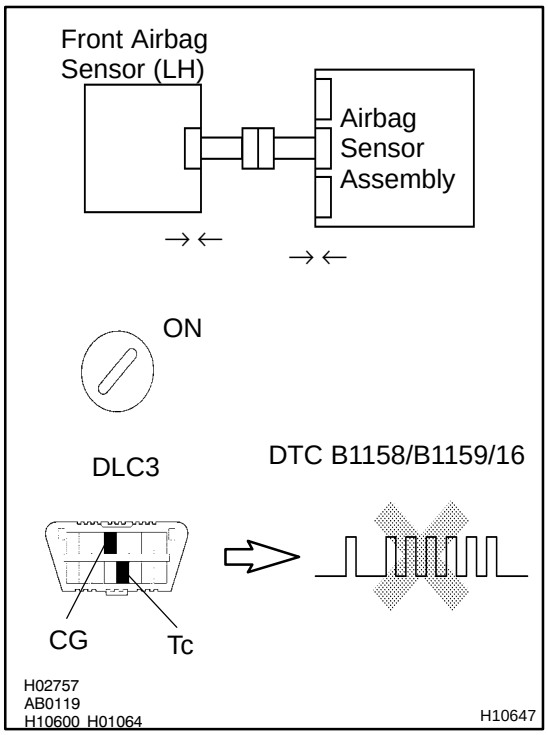

PREPARATION:

(a) Turn ignition switch to LOCK.
(b) Disconnect negative (–) terminal cable from the battery, and wait at least for 90 seconds.
(c) Connect the front airbag sensor (LH) connector and airbag sensor assembly connector.
(d) Connect negative (–) terminal cable to the battery, and wait at least for 2 seconds.

CHECK:

(a) Turn ignition switch to ON, and wait at least for 20 seconds.
(b) Clear DTC stored in memory (See page DI–490).
(c) Turn ignition switch to LOCK, and wait at least for 20 seconds.
(d) Turn ignition switch to ON, and wait at least for 20 seconds.
(e) Check DTC (See page DI–490).

OK:

DTC B1158/B1159/16 is not output.

HINT:

Codes other than code B1158/B1159/16 may be output at this time, but they are not relevant to this check.

NG	Replace airbag sensor assembly.

OK

From the results of the above inspection, the malfunctioning part can now be considered normal. To make sure of this, use the simulation method to check.

8	Check engine room main wire harness (to B+).

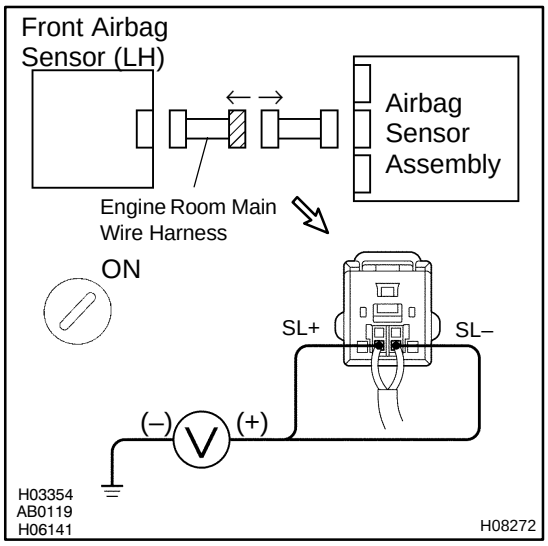

PREPARATION:

Disconnect the engine room main wire harness connector on the airbag sensor assembly side.

CHECK:

(a) Turn ignition switch to ON.

(b) For the connector (on the LH front door wire harness side) between the airbag sensor assembly and the engine room main wire harness, measure the voltage between body ground and each of SL+ and SL–.

OK:

Voltage: Below 1 V

NG → **Repair or replace engine room main wire harness.**

OK

Repair or replace harness or connector between airbag sensor assembly and engine room main wire harness.

9	Check engine room main wire harness (to ground).

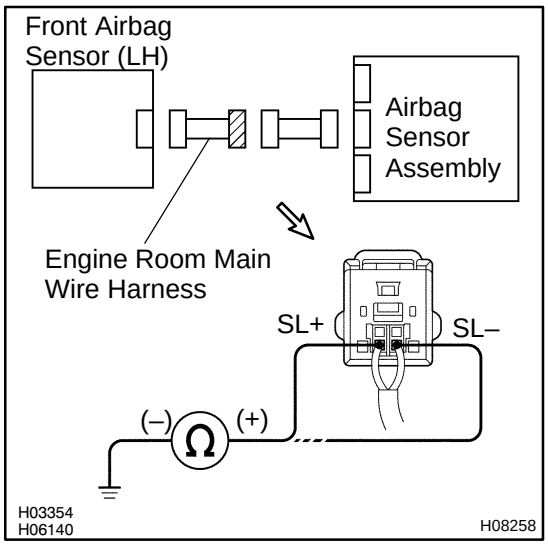

PREPARATION:

Disconnect the engine room main wire harness connector on the airbag sensor assembly side.

CHECK:

For the connector (on the engine room main wire harness side) between the airbag sensor assembly and the engine room main wire harness, measure the resistance between body ground and each of SL+ and SL–.

OK:

Resistance: 1 MΩ or Higher

NG → **Repair or replace engine room main wire harness.**

OK

Repair or replace harness or connector between airbag sensor assembly and engine room main wire harness.

10	Check engine room main wire harness.

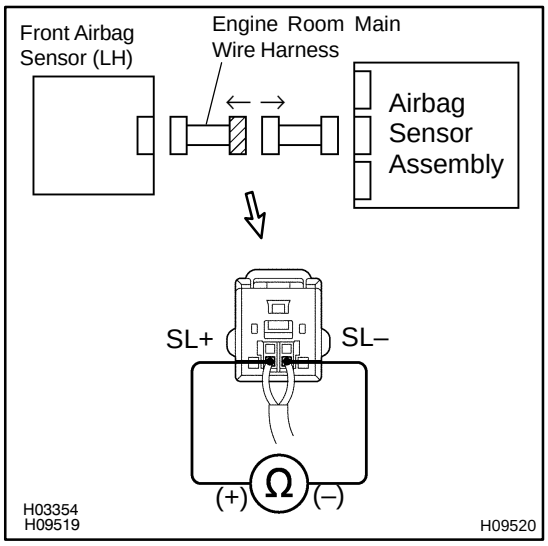

PREPARATION:

Disconnect the engine room main wire harness connector on the airbag sensor assembly side.

CHECK:

For the connector (on the engine room main wire harness side) between the airbag sensor assembly and the engine room main wire harness, measure the resistance between SL+ and SL–.

OK:

Resistance: 1 MΩ or Higher

NG → **Repair or replace engine room main wire harness.**

OK

Repair or replace harness or connector between airbag sensor assembly and engine room main wire harness.

11	Check engine room main wire harness.

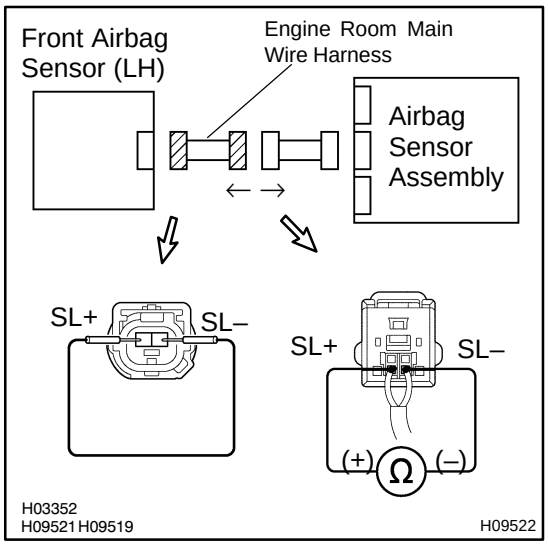

PREPARATION:

(a) Disconnect the engine room main wire harness connector on the airbag sensor assembly side.

(b) Using a service wire, connect SL+ and SL– of the connector (on the engine room main wire harness side) between the engine room main wire harness and the front airbag sensor (LH).

CHECK:

For the connector (on the engine room main wire harness side) between the airbag sensor assembly and the engine room main wire harness, measure the resistance between SL+ and SL–.

OK:

Resistance: Below 1 Ω

NG → **Repair or replace engine room main wire harness.**

OK

Repair or replace harness or connector between airbag sensor assembly and engine room main wire harness.

DI1BN–34

DTC	Normal	Source Voltage Drop

CIRCUIT DESCRIPTION

The SRS is equipped with a voltage–increase circuit (DC–DC converter) in the airbag sensor assembly in case the source voltage drops.
When the battery voltage drops, the voltage–increase circuit (DC–DC converter) functions to increase the voltage of the SRS to normal voltage.
The diagnosis system malfunction display for this circuit is different from other circuits that is when the SRS warning light remains lit up and the DTC is a normal code, source voltage drop is indicated.
Malfunction in this circuit is not recorded in the airbag sensor assembly, and the source voltage returns to normal, the SRS warning light automatically goes off.

DTC No.	Diagnosis
(Normal)	Source voltage drop

WIRING DIAGRAM

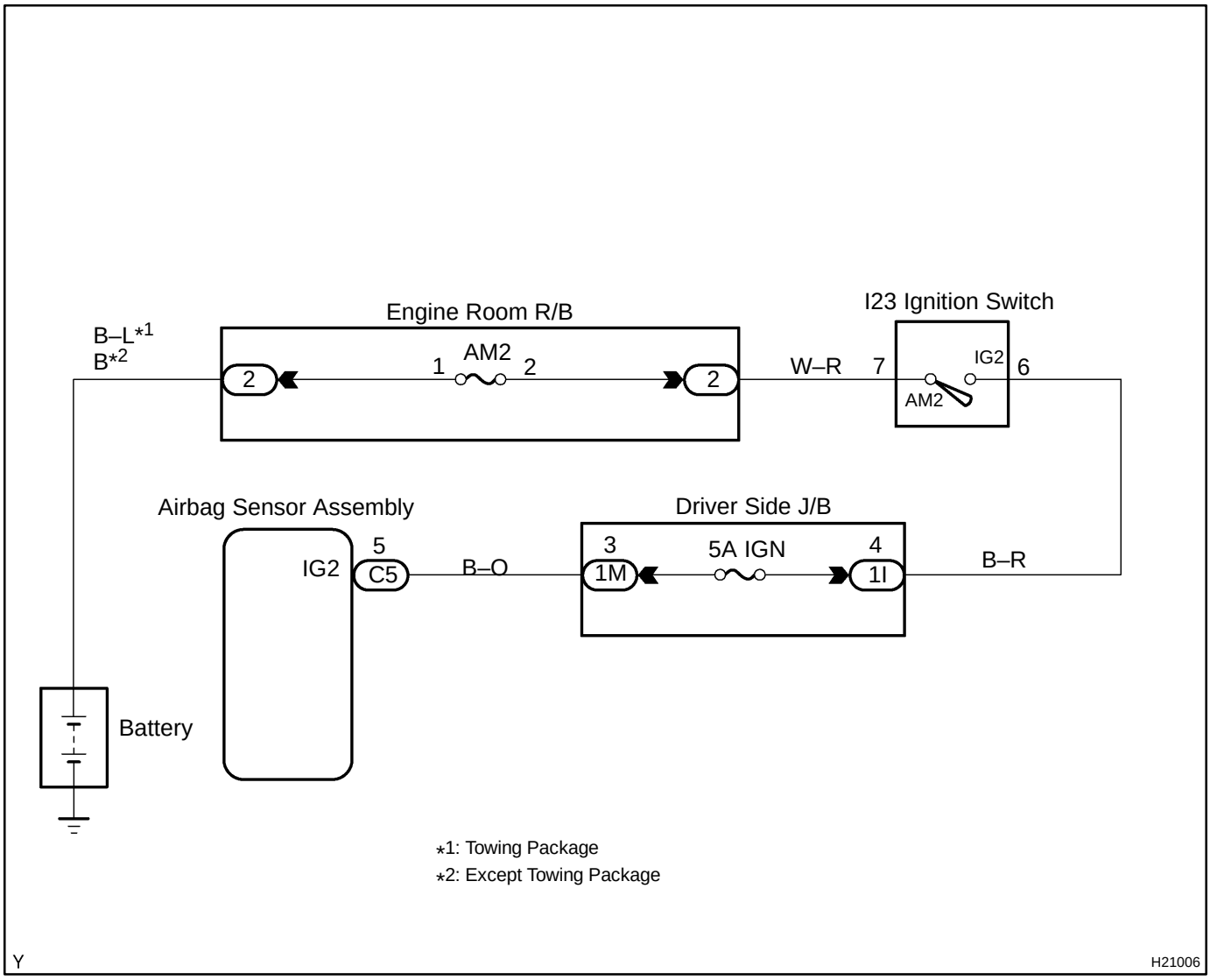

INSPECTION PROCEDURE

1	**Prepare for inspection.**

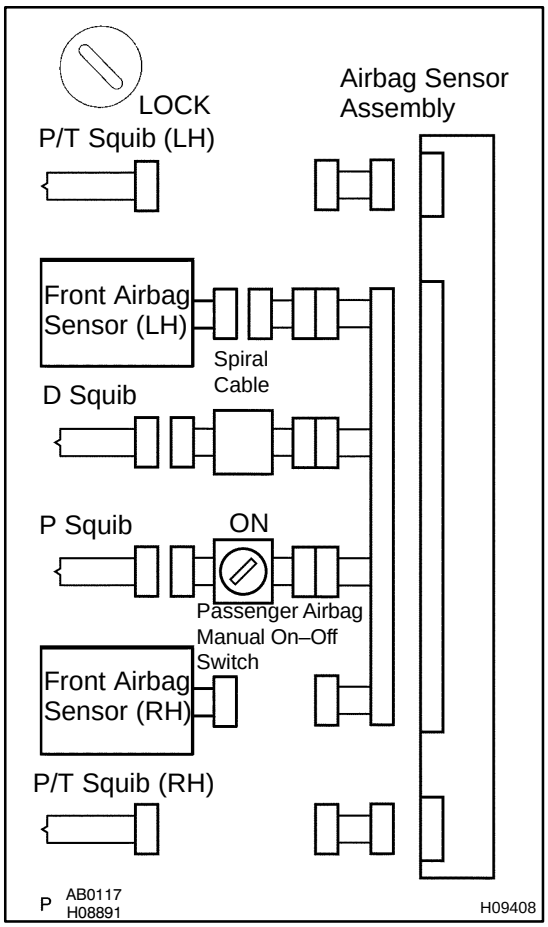

PREPARATION:

(a) Disconnect negative (–) terminal cable from the battery, and wait at least for 90 seconds.

(b) Remove the steering wheel pad (See page SR–18).

(c) Disconnect the connector of the front passenger airbag assembly (See page RS–25).

(d) Disconnect the connector of the seat belt pretensioner RH and LH (See page BO–137).

(e) Disconnect the connectors of the airbag sensor assembly (See page RS–36).

(f) Disconnect the front airbag sensor connectors (See page RS–41).

CAUTION:

Store the steering wheel pad and front passenger airbag assembly with the front surface facing upward.

2	Check source voltage.

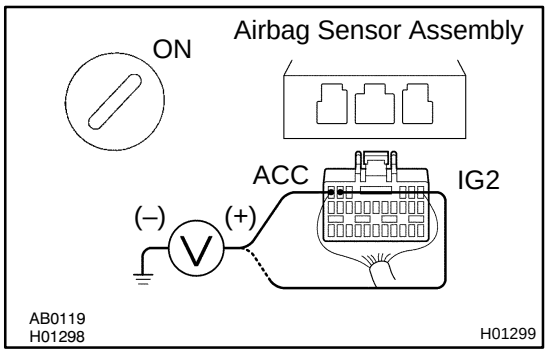

PREPARATION:

Connect negative (–) terminal cable to the battery.

CHECK:

(a) Turn ignition switch ON.

(b) Measure the voltage each of IG2 and ACC on the sensor and operate electric system (defogger, wiper, headlight, heater blower, etc.).

OK:

Voltage: 10 – 14 V

NG → **Check harness between battery and airbag sensor assembly, and check battery and charging system.**

OK

3	Does SRS warning light turn off?

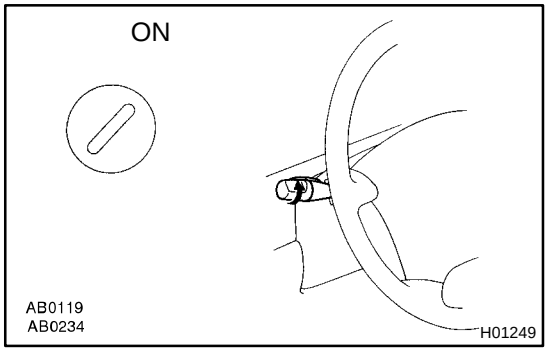

PREPARATION:

(a) Turn ignition switch to LOCK.

(b) Connect the steering wheel pad connector.

(c) Connect the front passenger airbag assembly connector.

(d) Connect the airbag sensor assembly connectors.

(e) Connect the seat belt pretensioner connectors.

(f) Connect the front airbag sensor connectors.

(g) Turn ignition switch to ON.

CHECK:

Operate electric system (defogger, wiper, headlight, heater blower, etc.) and check that SRS warning light goes off.

NO → **Check for DTCs. If a DTC is output, perform troubleshooting for the DTC. If a normal code is output, replace airbag sensor assembly.**

YES

From the results of the above inspection, the malfunctioning part can now be considered normal. To make sure of this, use the simulation method to check.

DI5RJ–24

SRS Warning Light Circuit Malfunction

CIRCUIT DESCRIPTION

The SRS warning light is located on the combination meter.
When the SRS is normal, the SRS warning light lights up for approx. 6 seconds after the ignition switch is turned from the LOCK position to ACC or ON position, and then turns off automatically.
If there is a malfunction in the SRS, the SRS warning light lights up to inform the driver of the abnormality.
When terminals Tc and E1 of the DLC1 are connected, the DTC is displayed by blinking the SRS warning light.

WIRING DIAGRAM

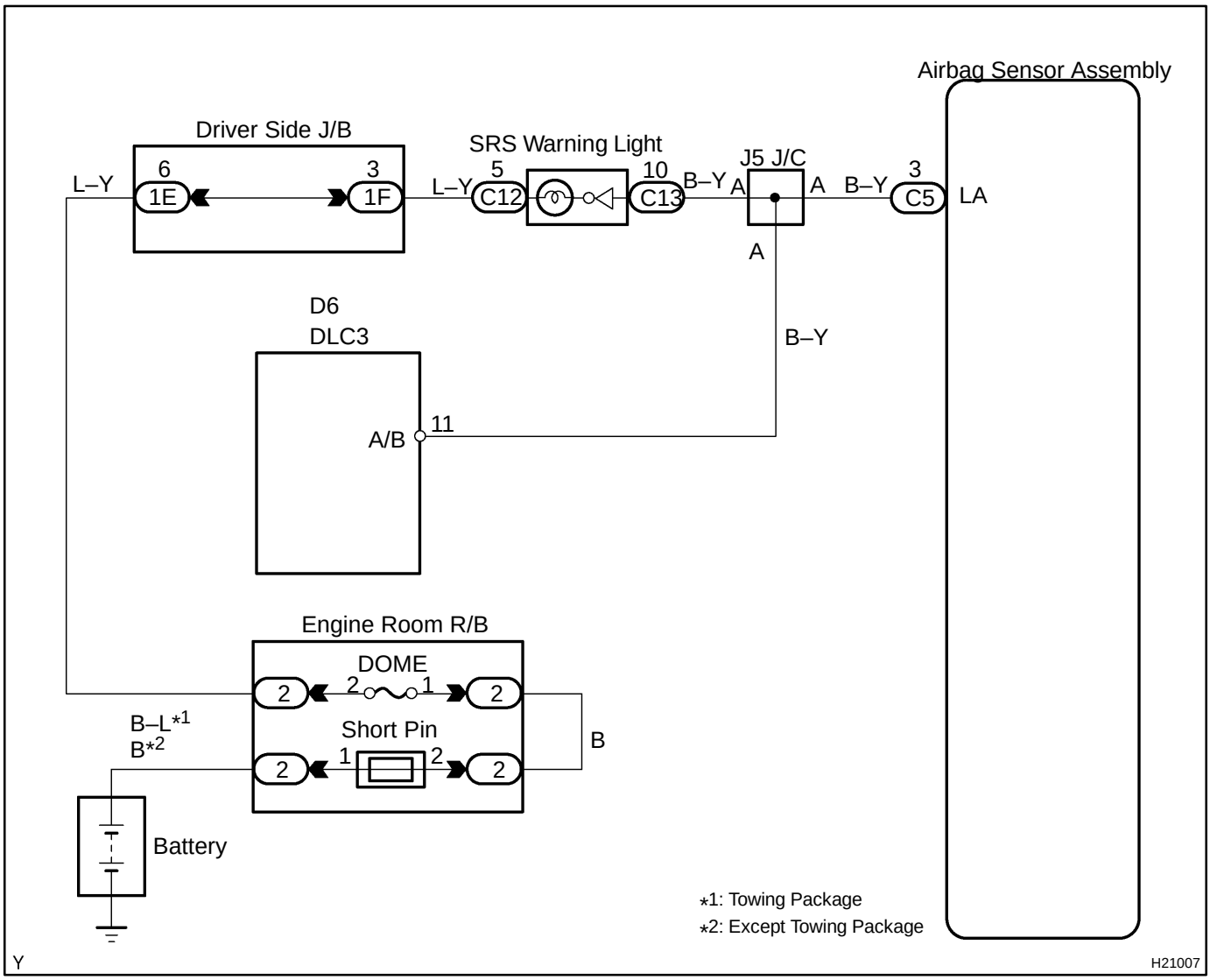

INSPECTION PROCEDURE

Always lit up, when ignition switch is in LOCK position

1	**Prepare for inspection (See step 1 on page DI–580).**

2	**Does SRS warning light turn off?**

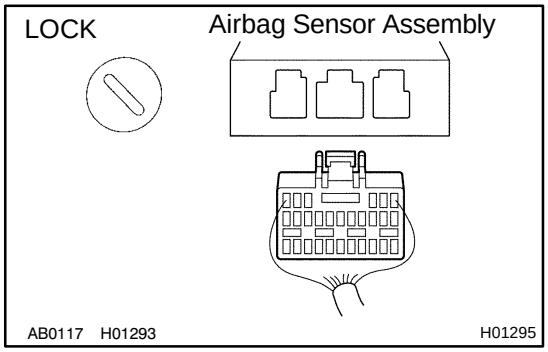

PREPARATION:

(a) Turn ignition switch to LOCK.
(b) Disconnect negative (–) terminal cable from the battery, and wait at least for 90 seconds.
(c) Disconnect the airbag sensor assembly connector.
(d) Connect negative (–) terminal cable to the battery.

CHECK:

Check operation of SRS warning light.

NO → **Check SRS warning light circuit or terminal AB circuit of DLC1.**

YES →

Replace airbag sensor assembly.

Does not light up, when ignition switch is turned to ACC or ON

1	**Check ECU–B Fuse.**

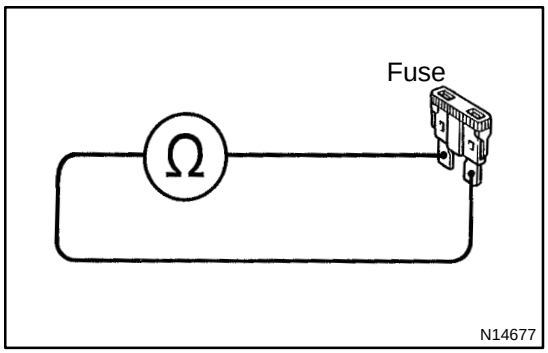

PREPARATION:
Remove ECU–B fuse.
CHECK:
Check continuity of ECU–B fuse.
OK:
Continuity
HINT:
- ▲ Fuse may be burnt out even if it appears to be OK during visual inspection.
- ▲ If fuse is OK, install it.

NG → **Go to step 5.**

OK

2	**Prepare for inspection (See step 1 on page DI–580).**

3	**Check SRS warning light circuit.**

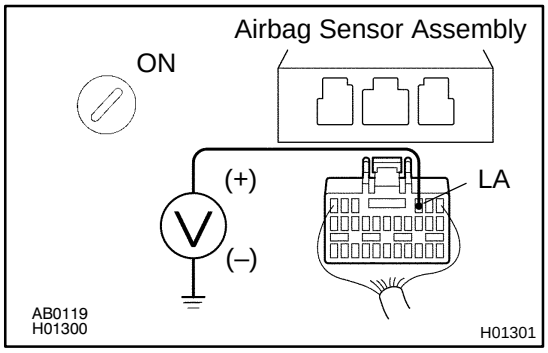

PREPARATION:
(a) Connect negative (–) terminal cable to the battery.
(b) Turn ignition switch to ACC or ON.
CHECK:
Measure the voltage LA terminal of the harness side connector of the airbag sensor assembly.
OK:
Voltage: 10 – 14 V

NG → **Check SRS warning light bulb or repair SRS warning light circuit.**

OK

4	Does SRS warning light come on?

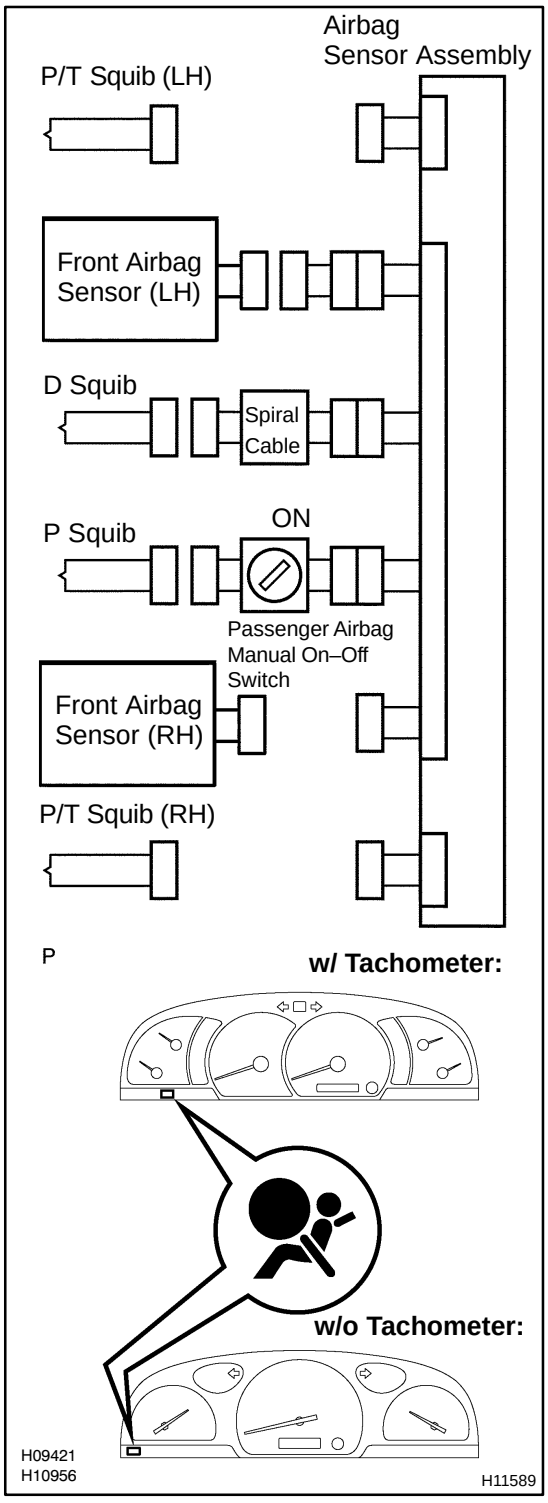

PREPARATION:H

(a) Disconnect negative (–) terminal cable from the battery.
(b) Connect the airbag sensor assembly connector.
(c) Connect negative (–) terminal cable to the battery, and wait at least for 2 seconds.
(d) Turn ignition switch to ACC or ON.

CHECK:

Check operation of SRS warning light.

NO → **Check terminal LA of airbag sensor assembly. If normal, replace airbag sensor assembly.**

YES

From the results of the above inspection, the malfunctioning part can now be considered normal. To make sure of this, use simulation method to check.

5	**Is new ECU–B fuse burnt out again?**

NO → **Using simulation method, reproduce malfunction symptoms (See page IN–17).**

YES

Check harness between ECU–B fuse and SRS warning light.

Tc Terminal Circuit

CIRCUIT DESCRIPTION

By connecting terminals Tc and CG of the DLC3 the airbag sensor assembly is set in the DTC output mode. The DTCs are displayed by blinking the SRS warning light.

WIRING DIAGRAM

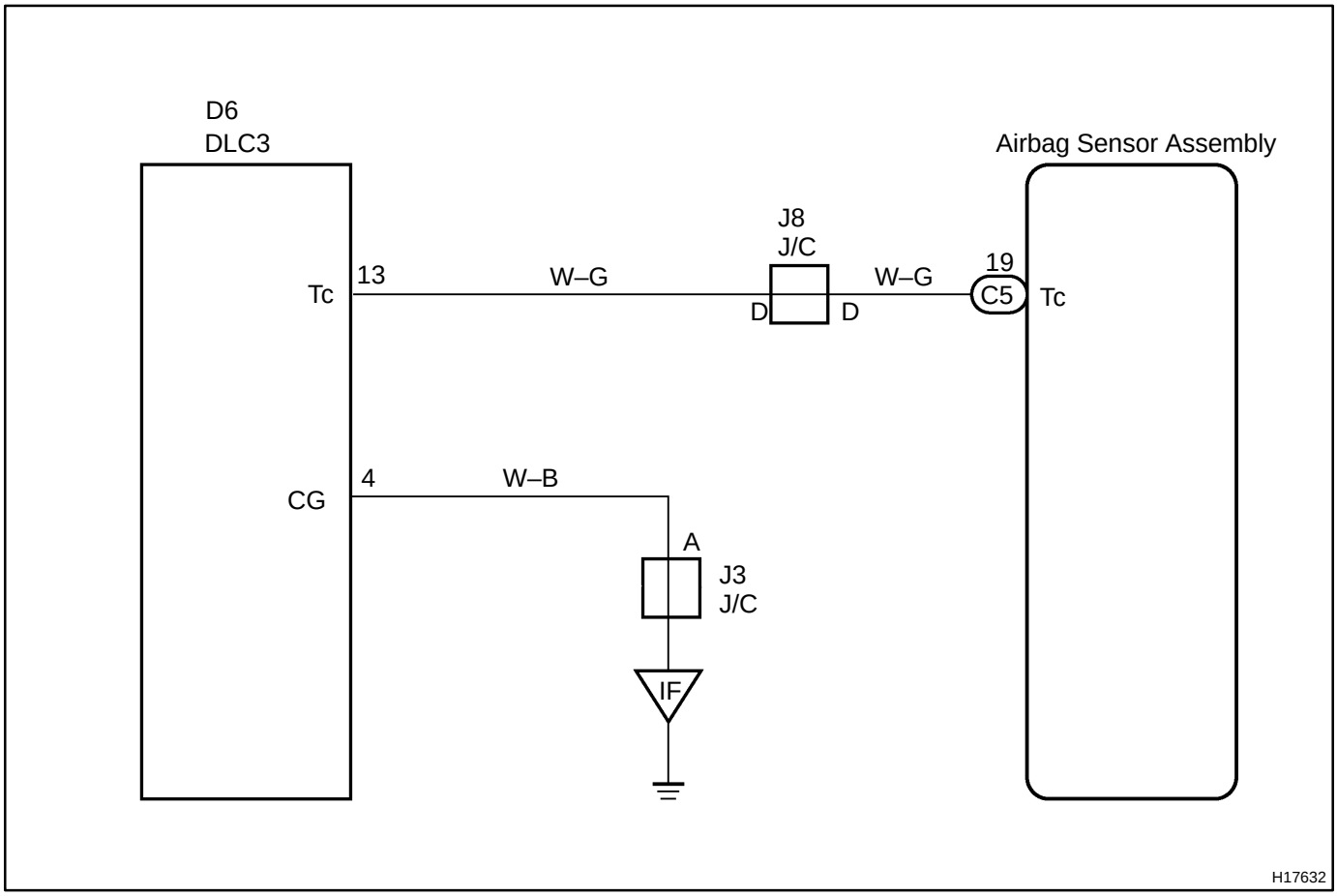

INSPECTION PROCEDURE

If the DTC is not displayed, do the following troubleshooting.

1	**Does SRS warning light light up for approx. 6 seconds?**

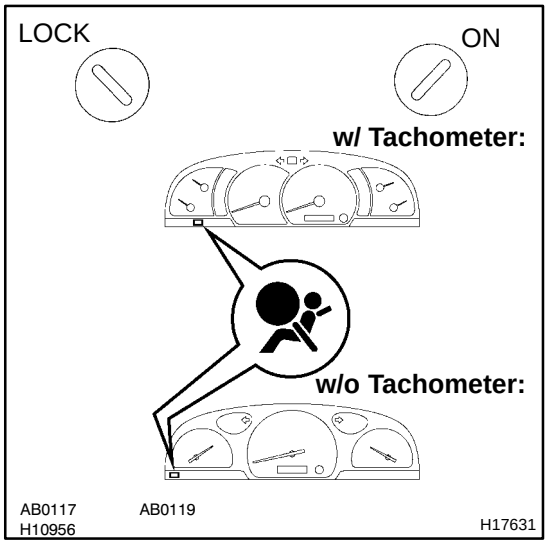

PREPARATION:

Check operation of the SRS warning light after ignition switch is turned from LOCK position to ON position.

NO → **Check SRS warning light system (See page DI–583).**

YES

2	**Check voltage between terminals Tc and CG of DLC3.**

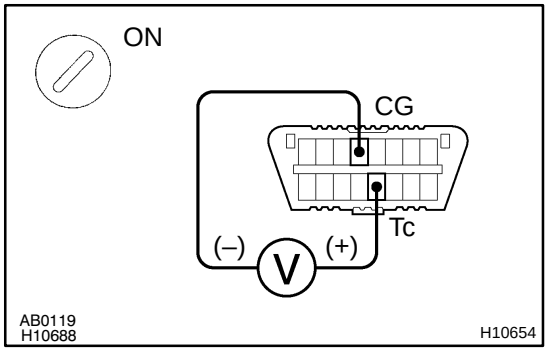

PREPARATION:

Turn ignition switch to ON.

CHECK:

Measure the voltage between terminals Tc and CG of DLC3.

OK:

Voltage: 10 – 14 V

OK → **Go to step 4.**

NG

3	Check voltage between terminal Tc of DLC3 and body ground.

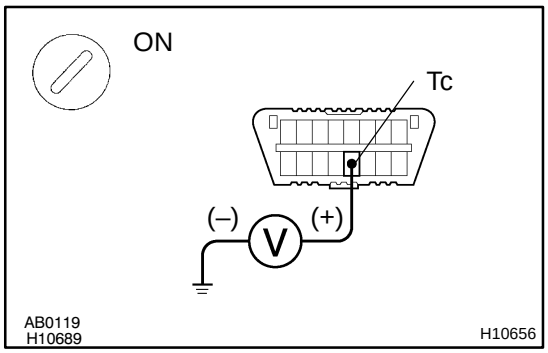

CHECK:

Measure the voltage between terminal Tc of DLC3 and body ground.

OK:

Voltage: 10 – 14 V

OK	Check harness between terminal CG of DLC3 and body ground.

NG

4	Check airbag sensor assembly.

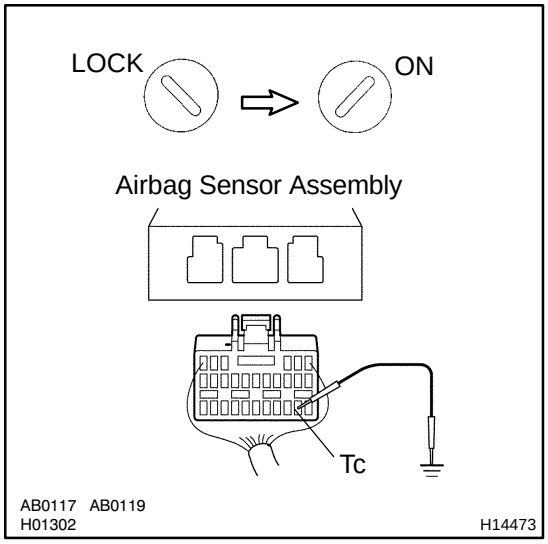

PREPARATION:

(a) Turn ignition switch to LOCK.
(b) Disconnect negative (–) terminal cable from the battery, and wait at least for 90 seconds.
(c) Disconnect the airbag sensor assembly connector.
(d) Insert service wire into terminal Tc from back side as shown in the illustration.
(e) Connect the airbag sensor assembly connector with service wire.
(f) Connect negative (–) terminal cable to the battery.
(g) Turn ignition switch to ON and wait at least for 20 seconds.
(h) Connect service wire of terminal Tc to body ground.

CHECK:

Check operation of SRS warning light.

OK:

SRS waning light comes on.

NOTICE:

Pay due attention to the terminal connecting position to avoid a malfunction.

OK	Check harness between the airbag sensor assembly and DLC3.

NG

Replace airbag sensor assembly.

If the DTC is displayed without a DTC check procedure, perform the following troubleshooting.

1	**Check resistance between terminal Tc of airbag sensor assembly and body ground.**

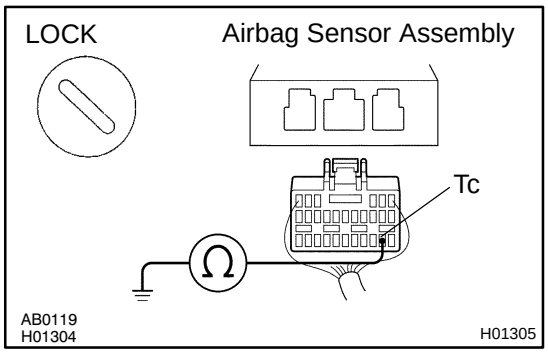

PREPARATION:

(a) Turn ignition switch to LOCK.
(b) Disconnect negative (–) terminal cable from the battery, and wait at least for 90 seconds.
(c) Disconnect the airbag sensor assembly connector.

CHECK:

Check resistance between terminal Tc of the airbag sensor assembly connector and body ground.

OK:

Resistance: 1 MΩ or Higher

NG → **Repair or replace harness or connector.**

OK

Replace airbag sensor assembly.

TOYOTA VEHICLE INTRUSION PROTECTION SYSTEM

DIA58–01

HOW TO PROCEED WITH TROUBLESHOOTING

HINT:

Troubleshooting of the TOYOTA vehicle intrusion protection system (TVIP) is based on the premise that the power door lock control system is operating normally. Accordingly, before troubleshooting the TOYOTA vehicle intrusion protection system, first make certain that the power door lock control system is operating normally.

Troubleshoot in accordance with the procedures on the following page.

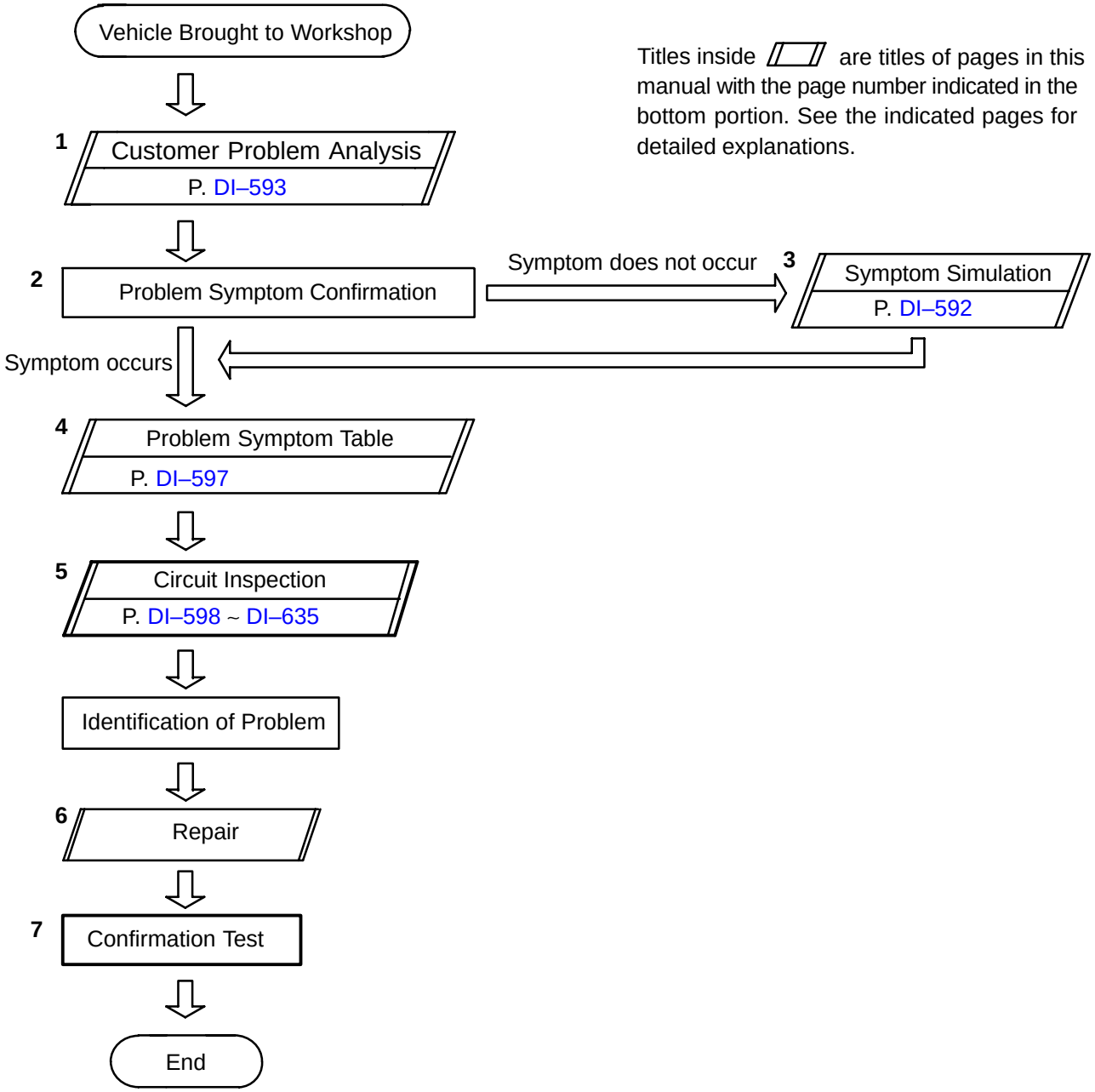

DIA59–01

CUSTOMER PROBLEM ANALYSIS CHECK

TVIP SYSTEM Check Sheet

Inspector's name: _____

Customer's Name		**Registration No.**	
		Registration Year	
		Frame No.	
Date Vehicle Brought in	/ /	**Odometer Reading**	**km mile**

Date Problem First Occurred		/ /
Frequency Problem Occurs		▲ Constant ▲ Sometimes (Times per day, month) ▲ Once only
Weather Conditions When Problem Occurred	**Weather**	▲ Fine ▲ Cloudy ▲ Rainy ▲ Snowy ▲ Various/Others
	Outdoor temperature	▲ Hot ▲ Warm ▲ Cool ▲ Cold (Approx. °C (°F))

Problem Symptom	▲ TVIP system cannot be set.		
	▲ Security indicator light does not flash when the TVIP system is set. (It stays on or does not light at all.)		
	▲ TVIP system does not operate.	▲ When door is unlocked using door lock knob. ▲ When door is opened.	Malfunction ▲ Vehicle horns only ▲ Headlights only ▲ Taillights only ▲ Interior light only ▲ Door lock operation only ▲ TVIP buzzer only
	▲ TVIP system cannot be canceled, once set.	▲ When door is unlocked using key or wireless door lock control system. ▲ When key is inserted in ignition key cylinder and turned to ACC or ON position. (However, only when system has never operated)	
	▲ TVIP system cannot be canceled during warning operation.	▲ When door is unlocked using key or wireless door lock control system. ▲ When key is inserted in ignition key cylinder and turned to ACC or ON position.	
	▲ Warning operation does not start when TVIP system is set and door is opened with key.		
	▲ Others.		

DIA5A–02

PARTS LOCATION

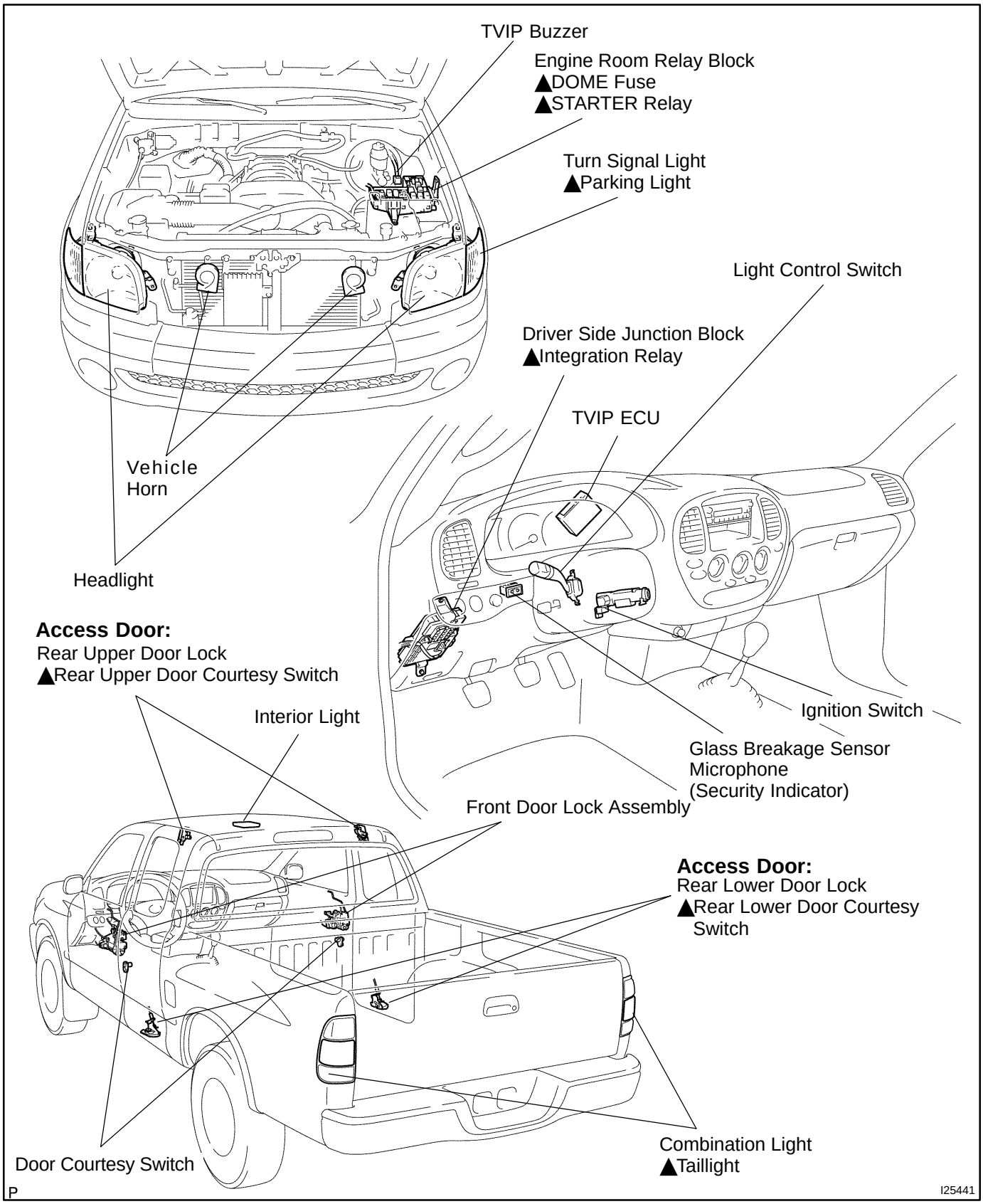

DIA5B–01

TERMINALS OF ECU

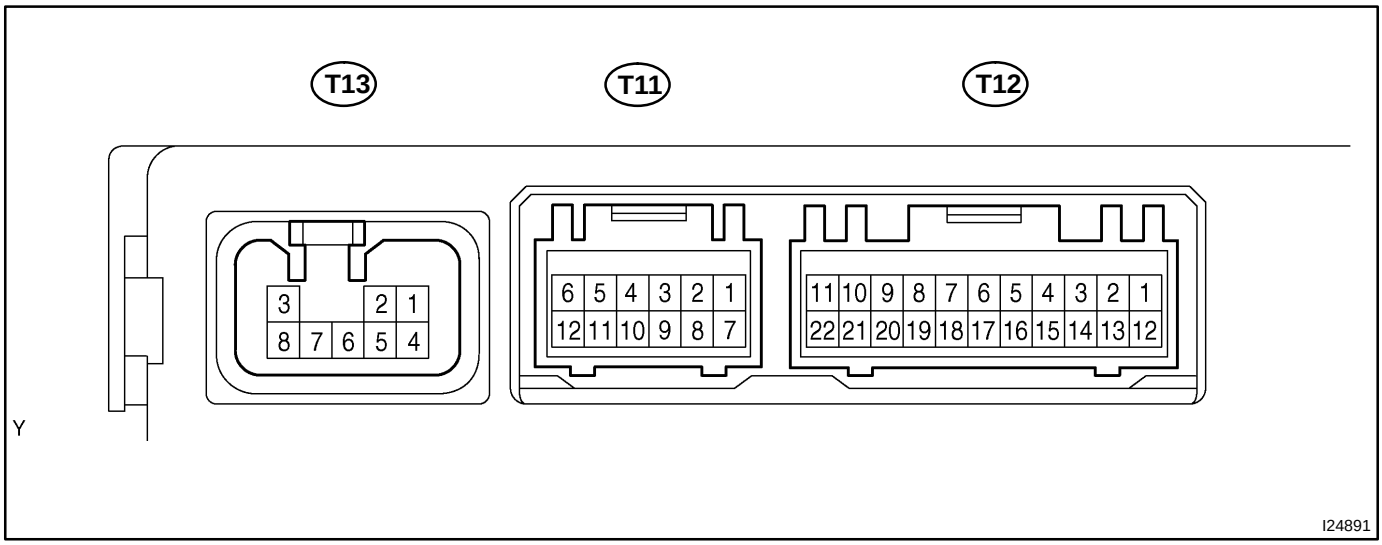

Symbols (Terminals No.)	Wiring color	Condition	STD value
IND ↔ E (T11–6 ↔ T11–7)	L–W ↔ W–B	Security indicator lights up. (It lights up only for 30 seconds.)	10 – 14 V
+B1 ↔ E (T12–11 ↔ T11–7)	W–R ↔ W–B	Constant	10 – 14 V
+B2 ↔ E (T11–1 ↔ T11–7)	W–G ↔ W–B	Constant	10 – 14 V
IG ↔ E (T12–13 ↔ T11–7)	B–R ↔ W–B	Ignition switch OFF → ON.	0 V → 10 – 14 V
HORN ↔ E (T11–12 ↔ T11–7)	G–R ↔ W–B	Horn switch ON.	Below 1 V
		Horn switch OFF.	10 – 14 V
HEAD ↔ E (T11–10 ↔ T11–7)	G–Y ↔ W–B	Light control switch HEAD.	Below 1 V
		Light control switch OFF or TAIL.	10 – 14 V
TAIL ↔ E (T11–11 ↔ T11–7)	R–B ↔ W–B	Light control switch TAIL or HEAD.	Below 1 V
		Light control switch OFF.	10 – 14 V
DMLP ↔ E (T13–6 ↔ T11–7)	B–W ↔ W–B	Alarm sounding state	Pulse generation
KSW ↔ E (T12–6 ↔ T11–7)	P–B ↔ W–B	Key is inserted in ignition key cylinder.	Below 1 V
UL1 ↔ E (T12–9 ↔ T11–7)	L–R ↔ W–B	Driver side door lock OFF → UNLOCK.	10 – 14 V → Below 1 V
UL2 ↔ E (T12–10 ↔ T11–7)	R–Y ↔ W–B	Passenger side door lock OFF → UNLOCK.	10 – 14 V → Below 1 V
UL3 ↔ E (T11–4 ↔ T11–7)	L–R ↔ W–B	Driver side door lock OFF → UNLOCK.	10 – 14 V → Below 1 V
L2 ↔ E (T11–8 ↔ T11–7)	W–G ↔ W–B	Door lock OFF → LOCK.	10 – 14 V → Below 1 V
ACT+ ↔ E (T13–2 ↔ T11–7)	L–Y ↔ W–B	Driver side door lock motor OFF → LOCK.	0 V → 10 – 14 V → Below 1 V
ACT– ↔ E (T13–4 ↔ T11–7)	B–Y ↔ W–B	Driver side door lock motor OFF → UNLOCK.	0 V → 10 – 14 V → Below 1 V

Symbols (Terminals No.)	Wiring color	Condition	STD value
DSWD ↔ E (T12–4 ↔ T17–7)	L ↔ W–B	Driver side door fully closed → Opened.	10 – 14 V → 0 V
CTY ↔ E (T12–5 ↔ T17–7)	B ↔ W–B	All doors fully closed → Any door opened.	10 – 14 V → 0 V
LSWD ↔ E (T12–14 ↔ T17–7)	R–L ↔ W–B	Driver side door lock UNLOCK → LOCK.	0 V → 10 – 14 V
LSWP ↔ E (T12–15 ↔ T17–7)	L–Y ↔ W–B	Passenger side door lock UNLOCK → LOCK.	0 V → 10 – 14 V
LUG ↔ E (T11–2 ↔ T17–7)	LG–B ↔ W–B	Constant (Vehicle with wireless door lock function only.)	0 V
		Constant (Vehicle with wireless door lock function and TVIP.)	10 – 14 V
E ↔ Body ground (T17–7 ↔ Body ground)	W–B ↔ –	Constant	0 V

DIA5C–01

PROBLEM SYMPTOMS TABLE

Proceed to the reference page shown in the table below for each malfunction symptom and troubleshoot the circuit.

HINT:

Troubleshooting of the TVIP system is based on the premise that the power door lock control system is operating normally. Accordingly, before troubleshooting the TVIP system, first make certain that the power door lock control system is operating normally.

Symptom	Suspected area	See page
TVIP system cannot be set.	3. Security Indicator circuit 4. ECU power source circuit 5. Key unlock warning switch circuit 6. Door key lock and unlock switch circuit 7. Door courtesy switch circuit 8. Door unlock detection switch circuit	DI–598 DI–601 DI–615 DI–618 DI–630 DI–620
Security indicator does not blink when TVIP system is set.	Security indicator light circuit	DI–598
TVIP system does not operate when front door is unlocked (when TVIP system is set).	Door unlock detection switch circuit	DI–620
TVIP system is not canceled when ignition key is turned to ON position (when TVIP system is set).	1. Ignition switch circuit 2. Key unlock warning circuit	DI–603 DI–615
TVIP system still operates when door is opened with key (when TVIP system is set).	1. Door key lock and unlock switch circuit 2. Door unlock detection switch circuit	DI–618 DI–620
Vehicle horns do not sound while TVIP system is in alarm sounding state.	Vehicle horn circuit	DI–606
Headlights do not flash while TVIP system is in alarm sounding state.	Headlight control switch circuit	DI–609
Taillights do not flash while TVIP system is in alarm sounding state.	Taillight control switch circuit	DI–611
Interior light does not light up while TVIP system is in alarm sounding state.	Interior light switch circuit	DI–613
Engine does not start.	Starter relay circuit	DI–628 DI–624
TVIP buzzer does not chirp when wireless door lock is operated via transmitter.	TVIP buzzer circuit	DI–635
Doors cannot be locked or unlocked via transmitter.	Door lock motor circuit.	DI–622
TVIP system does not issue an alarm when glass is broken during alarm sounding state.	Glass breakage sensor circuit	DI–632

DIA5D–01

CIRCUIT INSPECTION

Security Indicator Circuit

CIRCUIT DESCRIPTION

When the TVIP system is preparing to be set, this circuit causes the security indicator to light up. When the system has been set, it continuously turns the indicator on for 0.2 second and turns it off for 1.8 seconds, thus the indicator blinks.

WIRING DIAGRAM

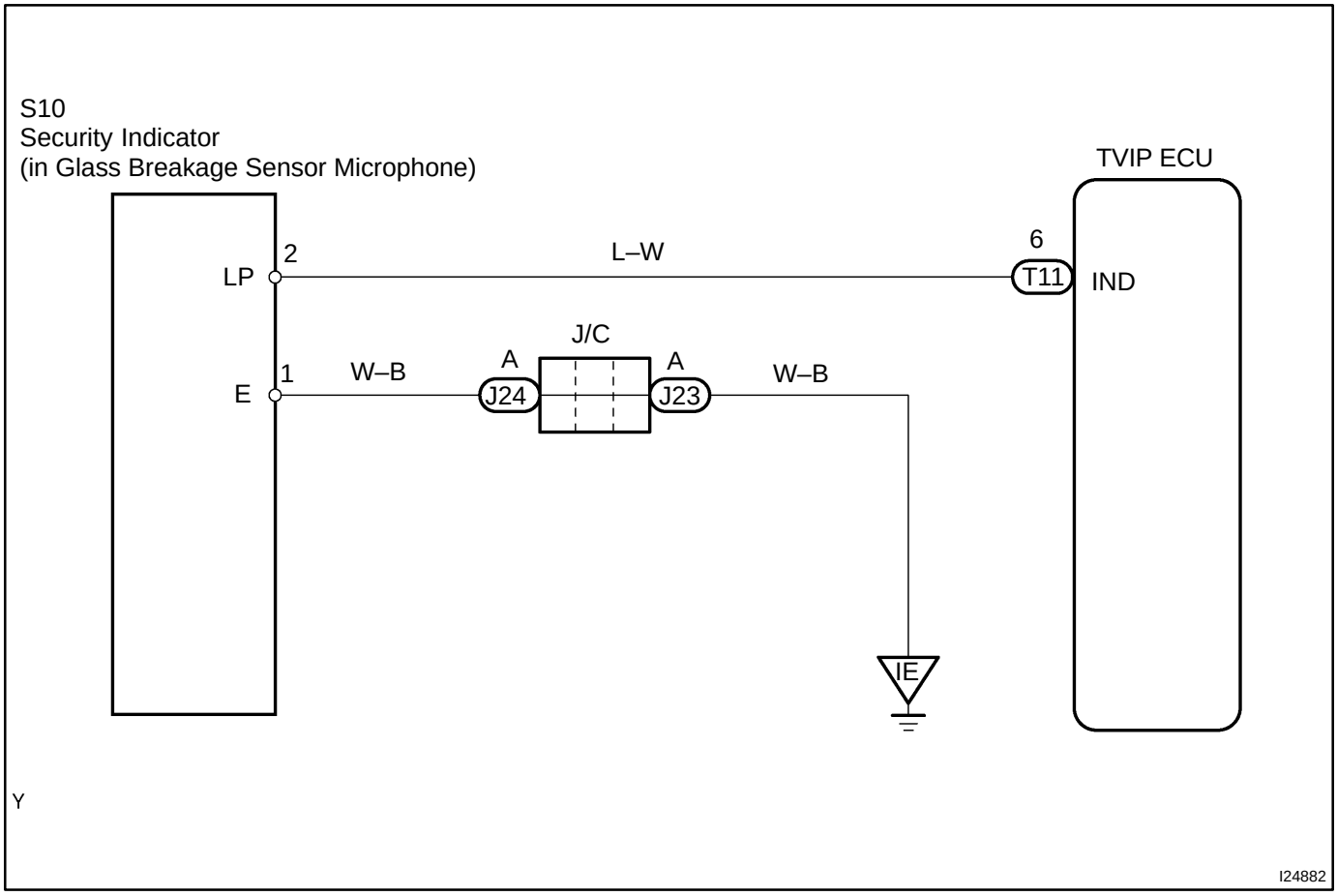

INSPECTION PROCEDURE

1	Inspect security indicator (Glass breakage sensor microphone).

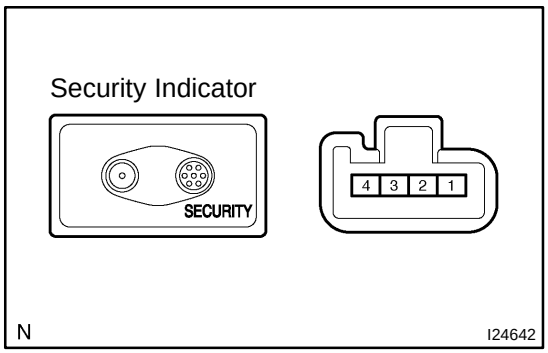

PREPARATION:

Remove the security indicator (glass breakage sensor microphone).

CHECK:

Apply battery voltage between each terminal, and check the lighting condition of the indicator.

OK:

Measuring condition	Operation
Battery positive (+) ↔ Terminal 2 Battery negative (–) ↔ Terminal 1	Lights up

NG → **Replace security indicator.**

OK

2	Check harness and connector between TVIP ECU and security indicator.

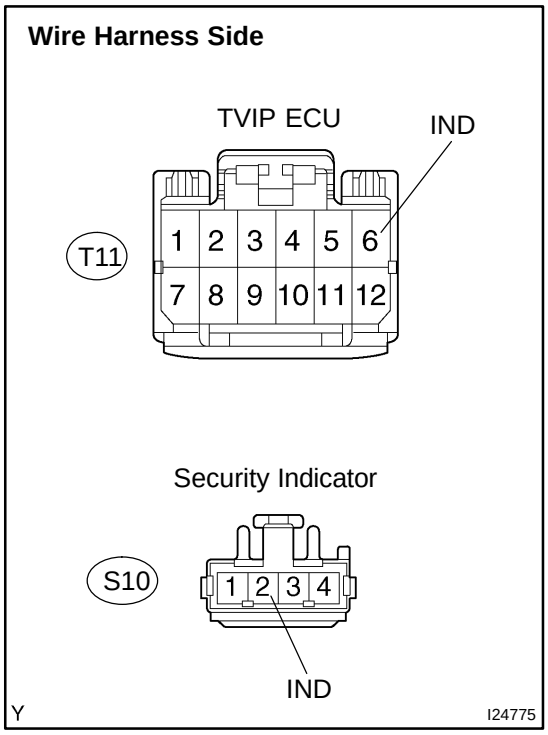

PREPARATION:

Disconnect the T11 TVIP ECU and S10 security indicator (glass breakage sensor microphone) connectors.

CHECK:

Check the continuity between the wire harness side connectors.

OK:

Symbols (Terminal No.) (TVIP ECU ↔ Security indicator)	Specified condition
IND (T11–6) ↔ IND (S10–2)	Continuity

NG → **Repair or replace harness and connector.**

OK

3	Check harness and connector between security indicator and body ground.

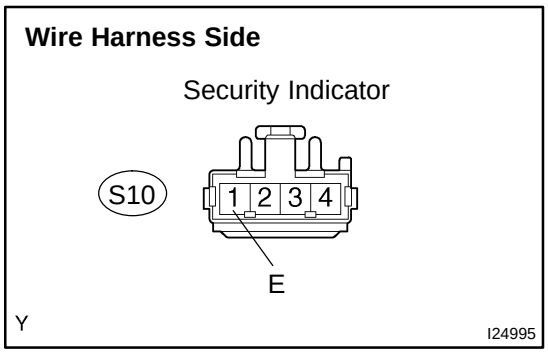

PREPARATION:

Disconnect the S10 security indicator (glass breakage sensor microphone) connector.

CHECK:

Check the continuity between the S10 security indicator wire harness side connector and body ground.

OK:

Symbols (Terminal No.) (Security indicator ↔ Body ground)	Specified condition
E (S10–1) ↔ Body ground	Continuity

NG → **Repair or replace harness and connector.**

OK →

Check and replace TVIP ECU.

DIA5F–01

Ignition Switch Circuit

CIRCUIT DESCRIPTION

When the ignition switch is turned to the ON position, battery positive voltage is applied to terminal IG of the TVIP ECU.

WIRING DIAGRAM

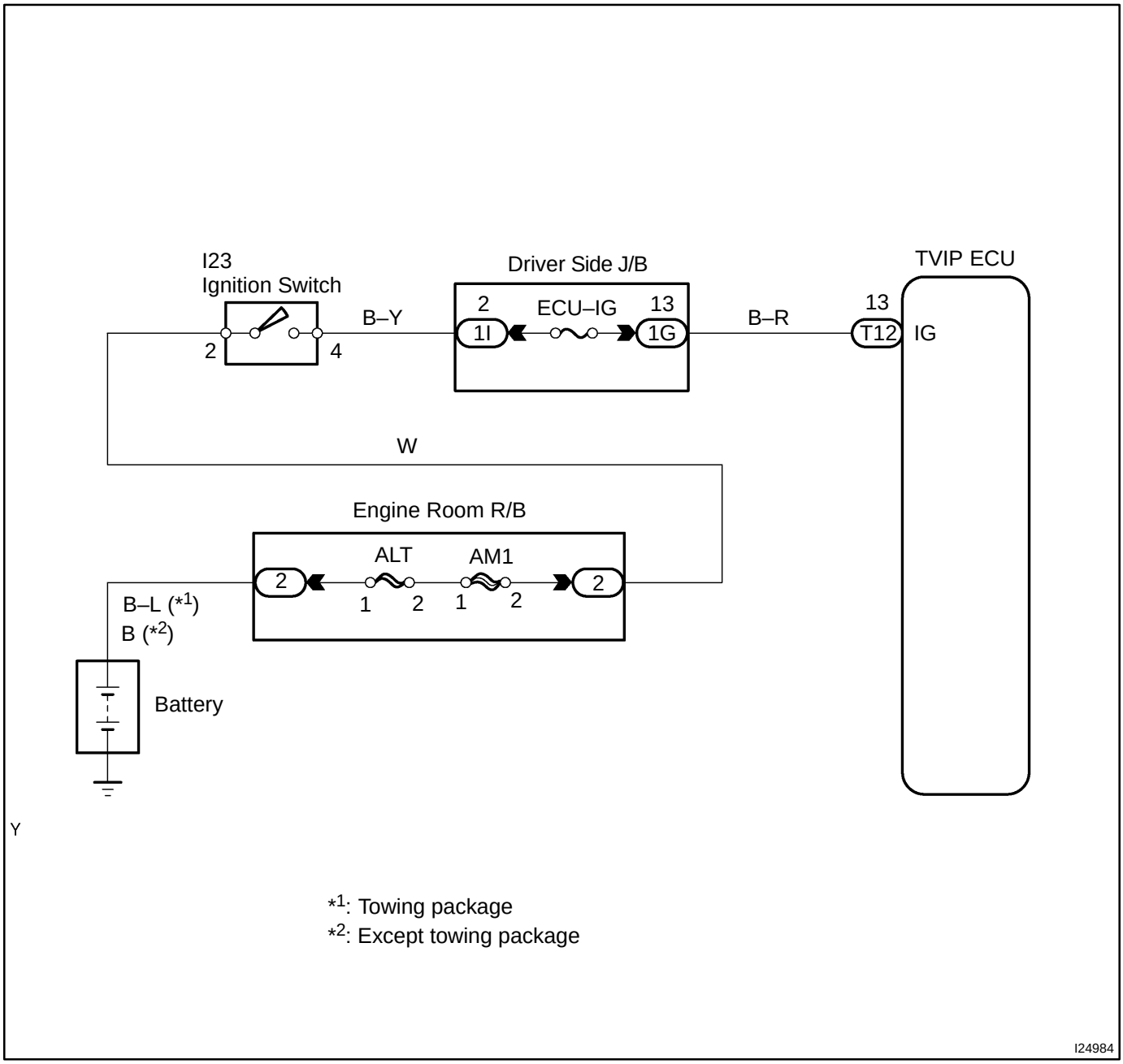

INSPECTION PROCEDURE

1	**Inspect AM1 M–fuse and ECU–IG fuse.**

PREPARATION:

(a) Remove the M–fuse from the engine room relay block.

(b) Remove the fuse from the driver side J/B.

CHECK:

Check the continuity.

OK:

Continuity

NG → **Replace M–fuse and/or fuse.**

OK

2	**Inspect ignition switch.**

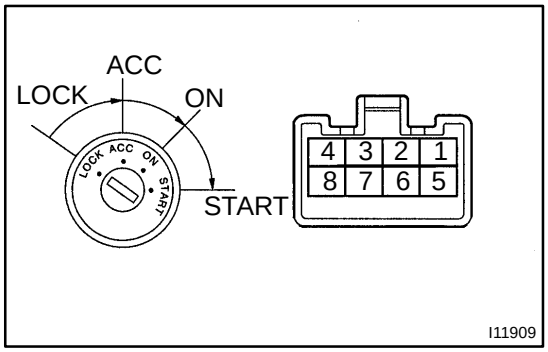

CHECK:

Check the switch continuity.

OK:

Switch position	Tester connection	Specified condition
LOCK	–	No continuity
ACC	2 – 3	Continuity
ON	2 – 3 – 4 6 – 7	Continuity
START	1 – 2 – 4 6 – 7 – 8	Continuity

NG → **Replace ignition switch.**

OK

3	Check voltage between terminal IG of TVIP ECU and body ground.

Wire Harness Side

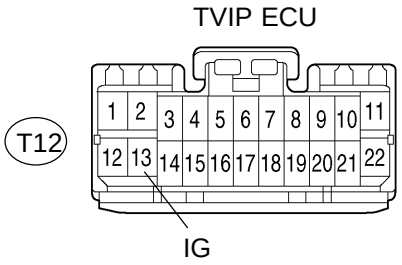

PREPARATION:

Disconnect the T12 TVIP ECU connector.

CHECK:

Check the voltage between the T12 TVIP ECU wire harness side connector and body ground.

OK:

Symbols (Terminal No.)	Specified condition
IG (T12–13) ↔ Body ground	10 – 14 V

NG → **Repair or replace harness and connector.**

OK

Check and replace TVIP ECU.

DIA5G–01

Vehicle Horn Circuit

CIRCUIT DESCRIPTION

When the TVIP system enters into the alarm sounding state, the TVIP ECU is turned on to cause the vehicle horns to sound for 60 seconds. At this time, the vehicle horns sound at an interval of 0.4 second.

WIRING DIAGRAM

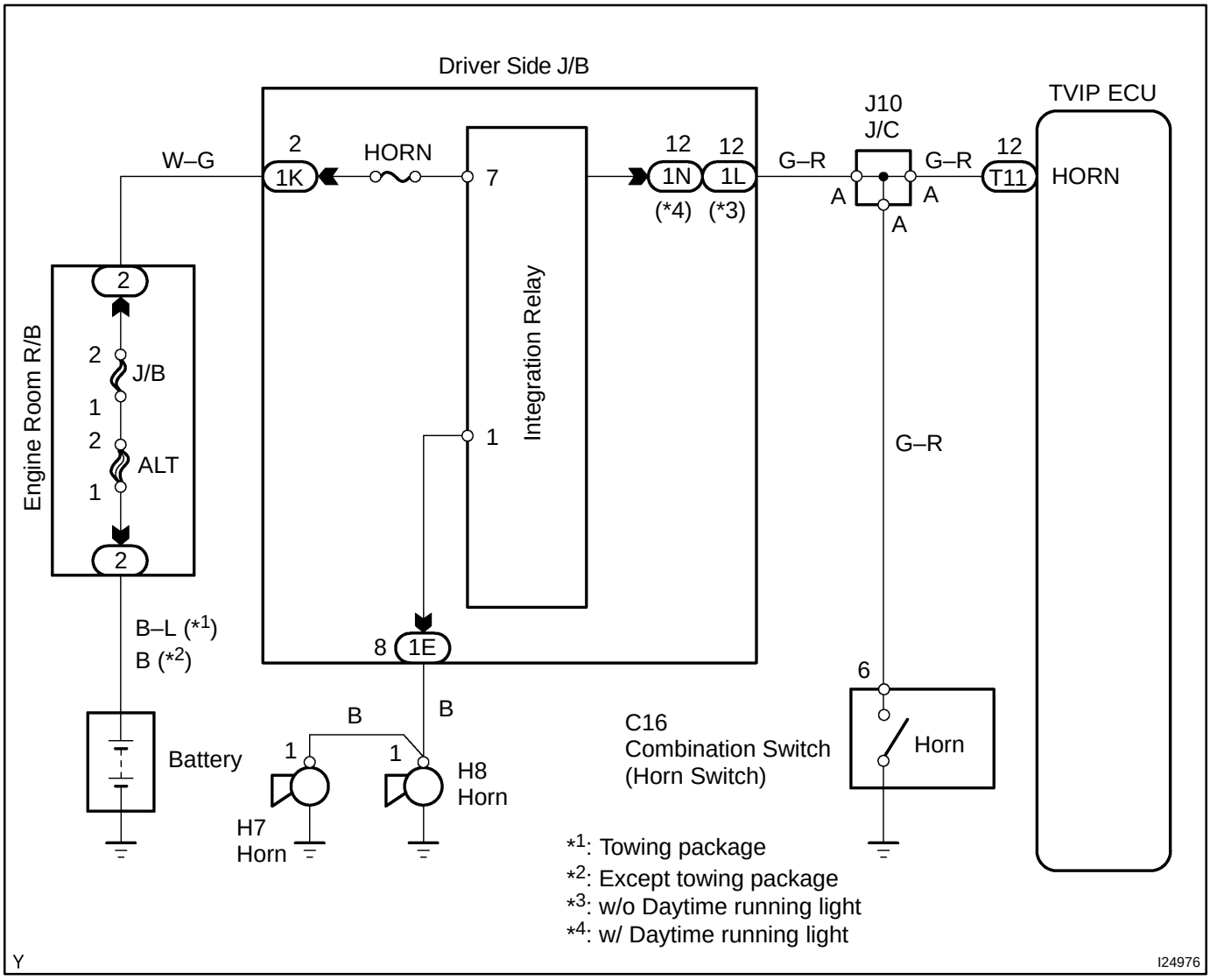

INSPECTION PROCEDURE

1	**Check horns operation.**

CHECK:

Check that the horns sound when the horn switch is pushed.

OK → **See step 5.**

NG

2	**Check horns.**

NG → **Replace horn.**

OK

3	**Check horn switch.**

NG → **Replace horn switch.**

OK

4	**Check harness and connector between horns and integration relay (driver side J/B), and integration relay (driver side J/B) and horn switch.**

NG → **Repair or replace harness and connector.**

OK

Check and replace driver side J/B.

5	Check harness and connector between TVIP ECU and integration relay (driver side J/B).

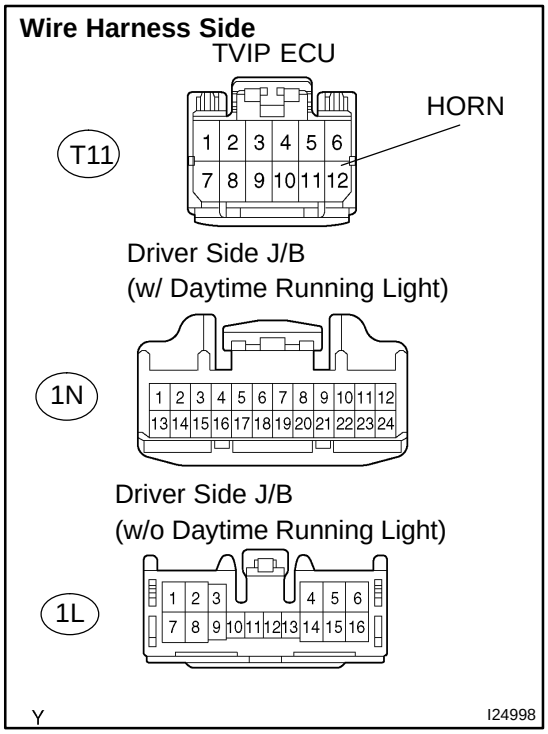

PREPARATION:

(a) Disconnect the T11 TVIP ECU connector.

(b) Disconnect the 1N or 1L driver side J/B connector.

CHECK:

Check the continuity between the wire harness side connectors.

OK:

w/ Daytime running light:

Symbols (Terminal No.) (TVIP ECU – Driver side J/B)	Specified condition
HORN (T11–12) ↔ – (1N–12)	Continuity

w/o Daytime running light:

Symbols (Terminal No.) (TVIP ECU ↔ Driver side J/B)	Specified condition
HORN (T11–12) ↔ – (1L–12)	Continuity

NG → **Repair or replace harness and connector.**

OK →

Check and replace TVIP ECU.

DIA5H–01

Headlight Control Switch Circuit

CIRCUIT DESCRIPTION

When the TVIP system enters into the alarm sounding state, the TVIP ECU is turned on to cause the headlights to flash for 60 seconds. At this time, the headlights flash at an interval of 0.4 second.

WIRING DIAGRAM

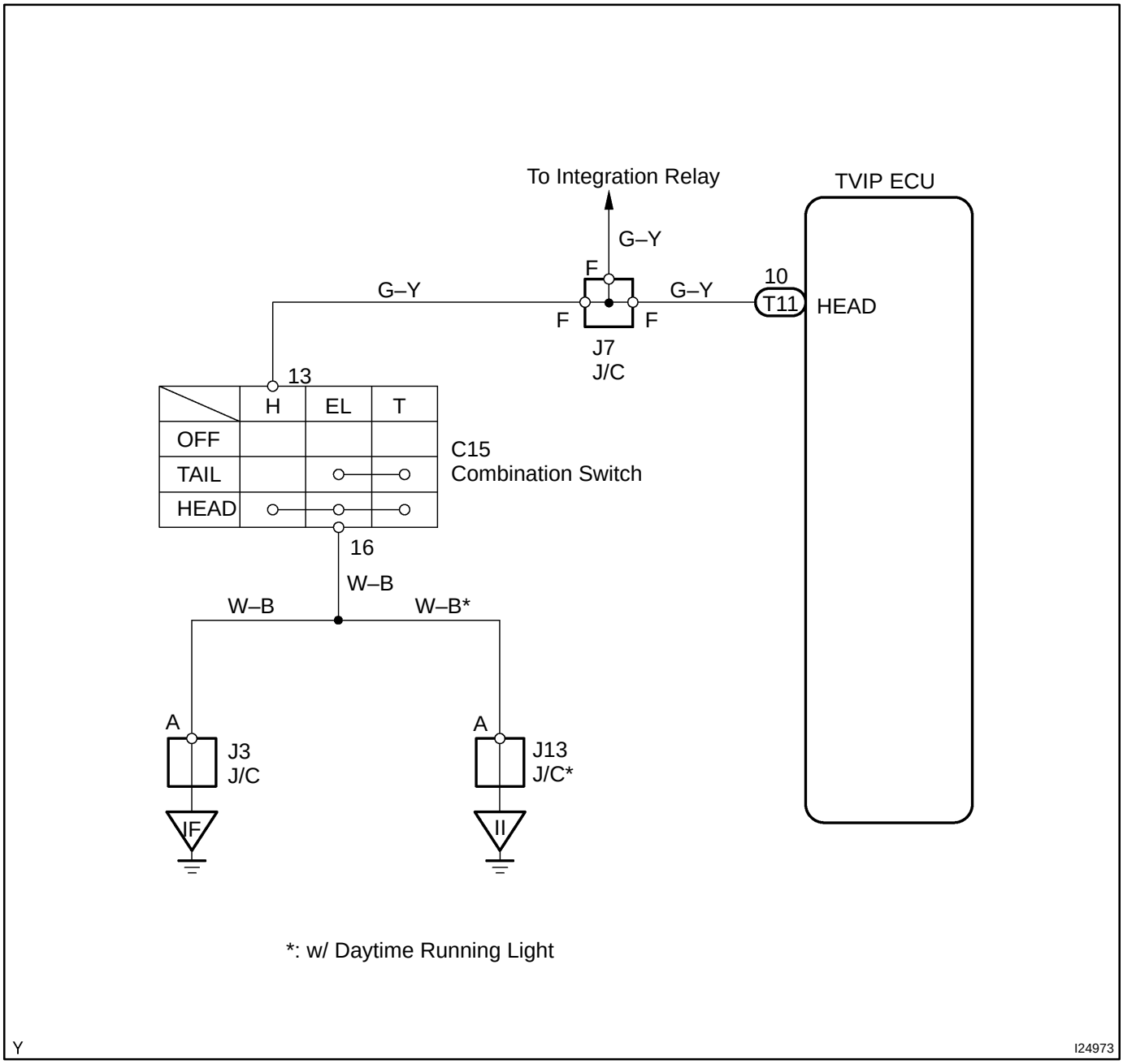

INSPECTION PROCEDURE

1	**Check headlights operation.**

CHECK:
Check that the headlights light up when the light control switch is turned to HEAD.

NG → **Check headlight and taillight system (See page BE–16).**

OK

2	**Check harness and connector between TVIP ECU and light control switch.**

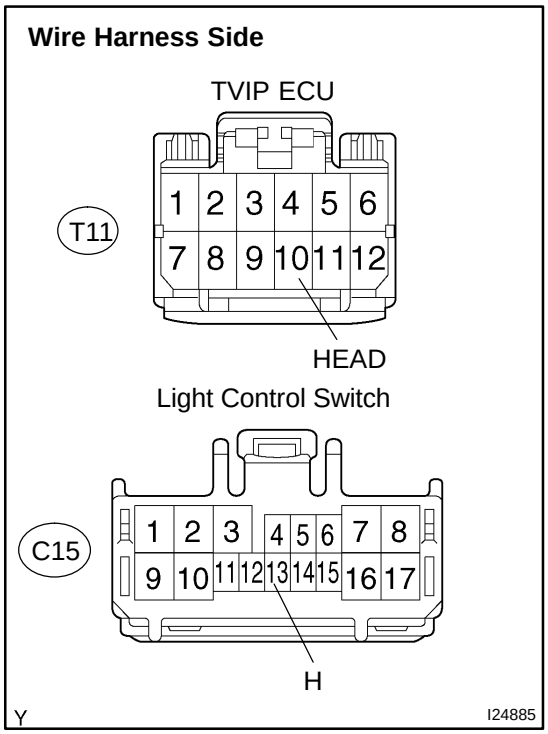

PREPARATION:
(a) Disconnect the T11 TVIP ECU connector.
(b) Disconnect the C15 light control switch connector.

CHECK:
Check the continuity between the wire harness side connectors.

OK:

Symbols (Terminal No.) (TVIP ECU ↔ Light control switch)	Specified condition
HEAD (T11–10) ↔ H (C15–13)	Continuity

NG → **Repair or replace harness and connector.**

OK

Check and replace TVIP ECU.

DIA5I–01

Taillight Control Switch Circuit

CIRCUIT DESCRIPTION

When the TVIP system enters into the alarm sounding state, the TVIP ECU is turned on to cause the taillights to flash for 60 seconds. At this time, the taillights flash at an interval of 0.4 second.

WIRING DIAGRAM

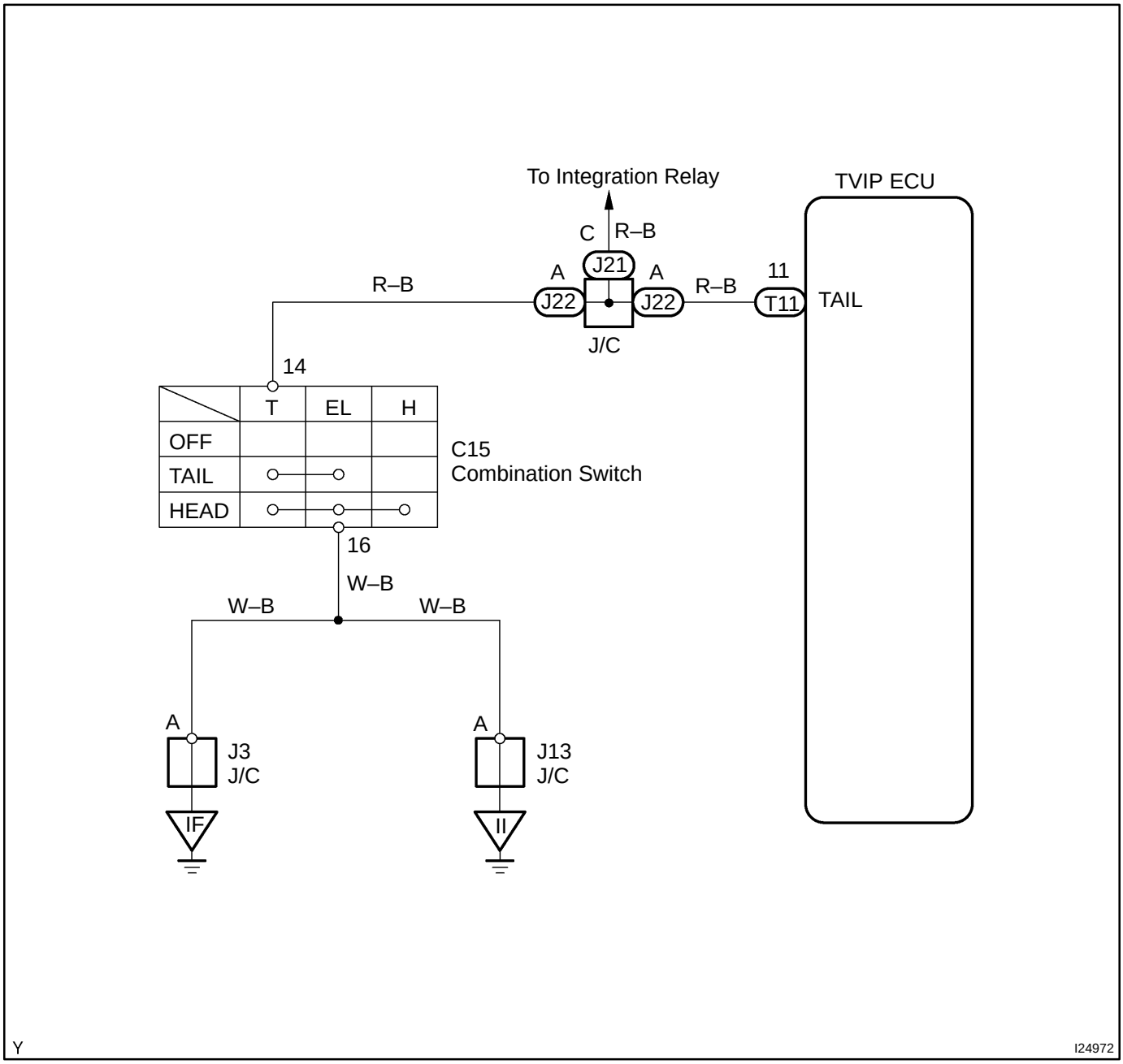

INSPECTION PROCEDURE

1	**Check taillights operation.**

CHECK:

Check that the taillights light up when the light control switch is turned to TAIL.

NG → **Check headlight and taillight system (See page BE–16).**

OK

2	**Check harness and connector between TVIP ECU and light control switch.**

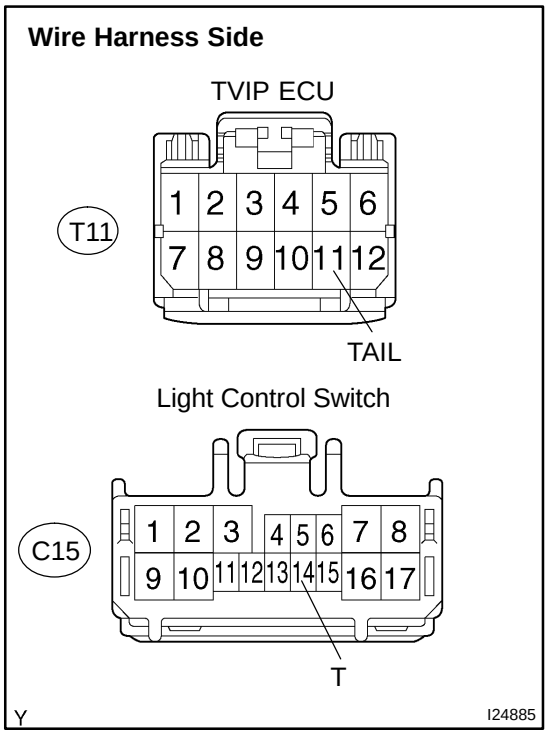

PREPARATION:

(a) Disconnect the T11 TVIP ECU connector.

(b) Disconnect the C15 light control switch connector.

CHECK:

Check the continuity between the wire harness side connectors.

OK:

Symbols (Terminal No.) (TVIP ECU ↔ Light control switch)	Specified condition
TAIL (T11–11) ↔ T (C15–14)	Continuity

NG → **Repair or replace harness and connector.**

OK

Check and replace TVIP ECU.

DIA5J–01

Interior Light Switch Circuit

CIRCUIT DESCRIPTION

When the TVIP system enters into the alarm sounding state, the TVIP ECU is turned on to cause the interior light to light up for 60 seconds.

WIRING DIAGRAM

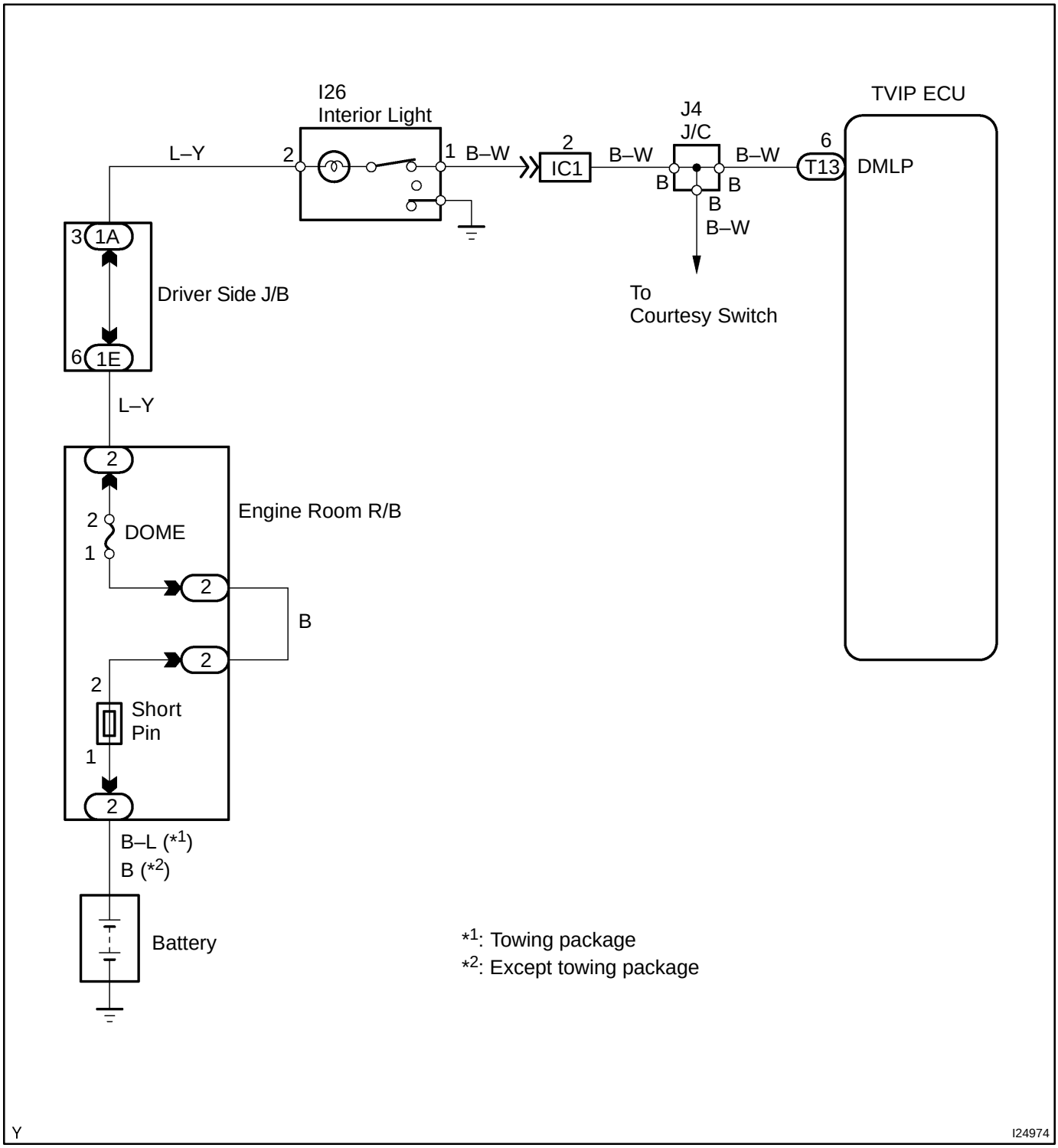

INSPECTION PROCEDURE

1	**Check interior light operation.**

CHECK:

Check the interior light lights up when the door is open.

NG → **Check interior light system (See page BE–31).**

OK

2	**Check harness and connector between TVIP ECU and interior light.**

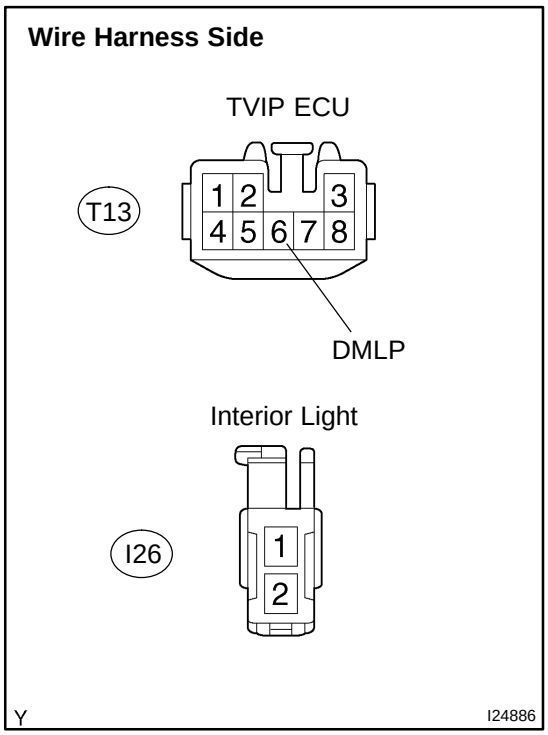

PREPARATION:

(a) Disconnect the T13 TVIP ECU connector.

(b) Disconnect the I26 interior light connector.

CHECK:

Check the continuity between the wire harness side connectors.

OK:

Symbols (Terminal No.) (TVIP ECU ↔ Interior light)	Specified condition
DMLP (T13–6) ↔ – (I26–1)	Continuity

NG → **Repair or replace harness and connector.**

OK

Check and replace TVIP ECU.

DIA5K–01

Key Unlock Warning Switch Circuit

CIRCUIT DESCRIPTION

The key unlock warning switch comes on when the ignition key is inserted in the key cylinder and goes off when the ignition key is removed.
The TVIP ECU causes the key confinement prevention function to operate while the key unlock warning switch is ON.

WIRING DIAGRAM

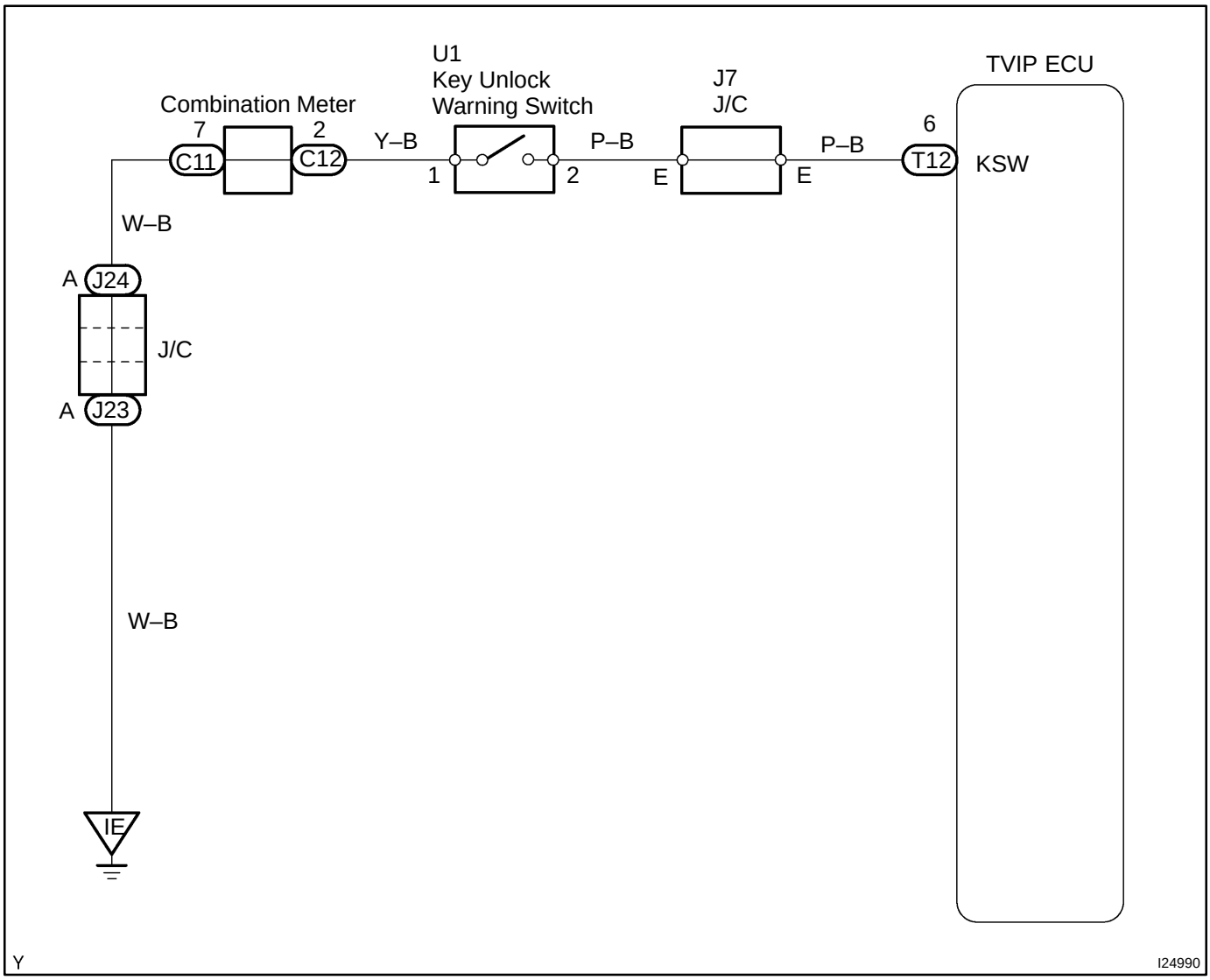

INSPECTION PROCEDURE

1	**Inspect key unlock warning switch.**

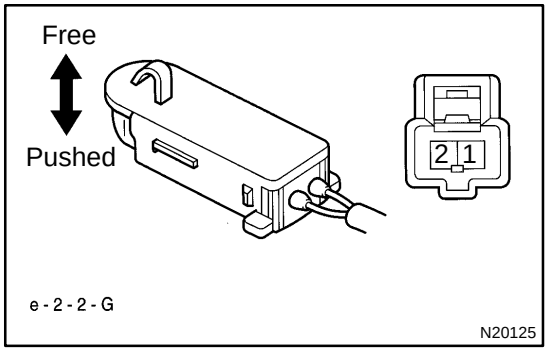

CHECK:

Check the continuity between the terminals.

OK:

Switch position	Tester connection	Specified condition
Switch free (Key removed)	1 – 2	No continuity
Switch pushed (Key inserted)	1 – 2	Continuity

NG → **Replace key unlock warning switch.**

OK

2	**Check harness and connector between TVIP ECU and key unlock warning switch.**

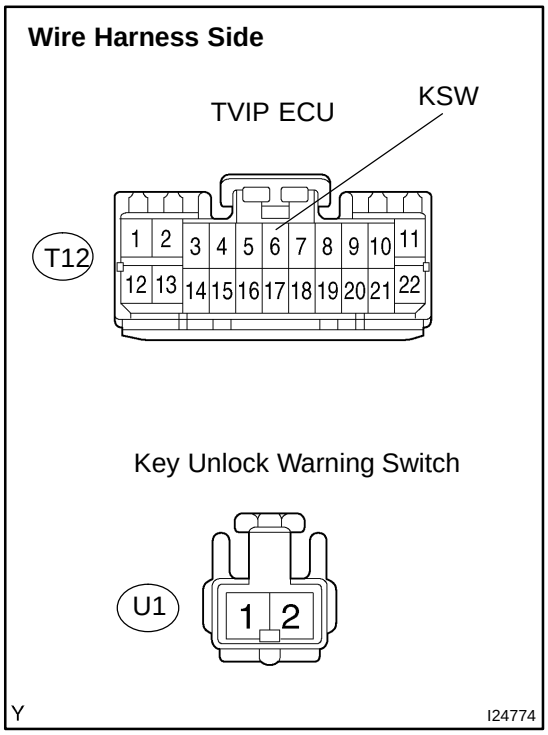

PREPARATION:

(a) Disconnect the T12 TVIP ECU connector.

(b) Disconnect the U1 key unlock warning switch connector.

CHECK:

Check the continuity between the wire harness side connectors.

OK:

Symbols (Terminal No.) (TVIP ECU ↔ Key Unlock Warning switch)	Specified condition
KSW (T12–6) ↔ – (U1–2)	Continuity

NG → **Repair or replace harness and connector.**

OK

3	**Check harness and connector between key unlock warning switch and body ground.**

Wire Harness Side

Key Unlock Warning Switch

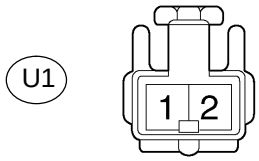

PREPARATION:

Disconnect the U1 key unlock warning switch connector.

CHECK:

Check the continuity between the U1 key unlock warning switch wire harness side connector and body ground.

OK:

Terminal No.	Specified condition
U1–1 ↔ Body ground	Continuity

NG → **Repair or replace harness and connector.**

OK

Check and replace TVIP ECU.

DIA5L–01

Door Key Lock and Unlock Switch Circuit

CIRCUIT DESCRIPTION

The door key lock and unlock switch is installed to the door lock assembly. When the switch is turned to the lock side using the key, terminal 1 of the switch is grounded. Also, when the switch is turned to the unlock side using the key, terminal 3 of the switch is grounded.

WIRING DIAGRAM

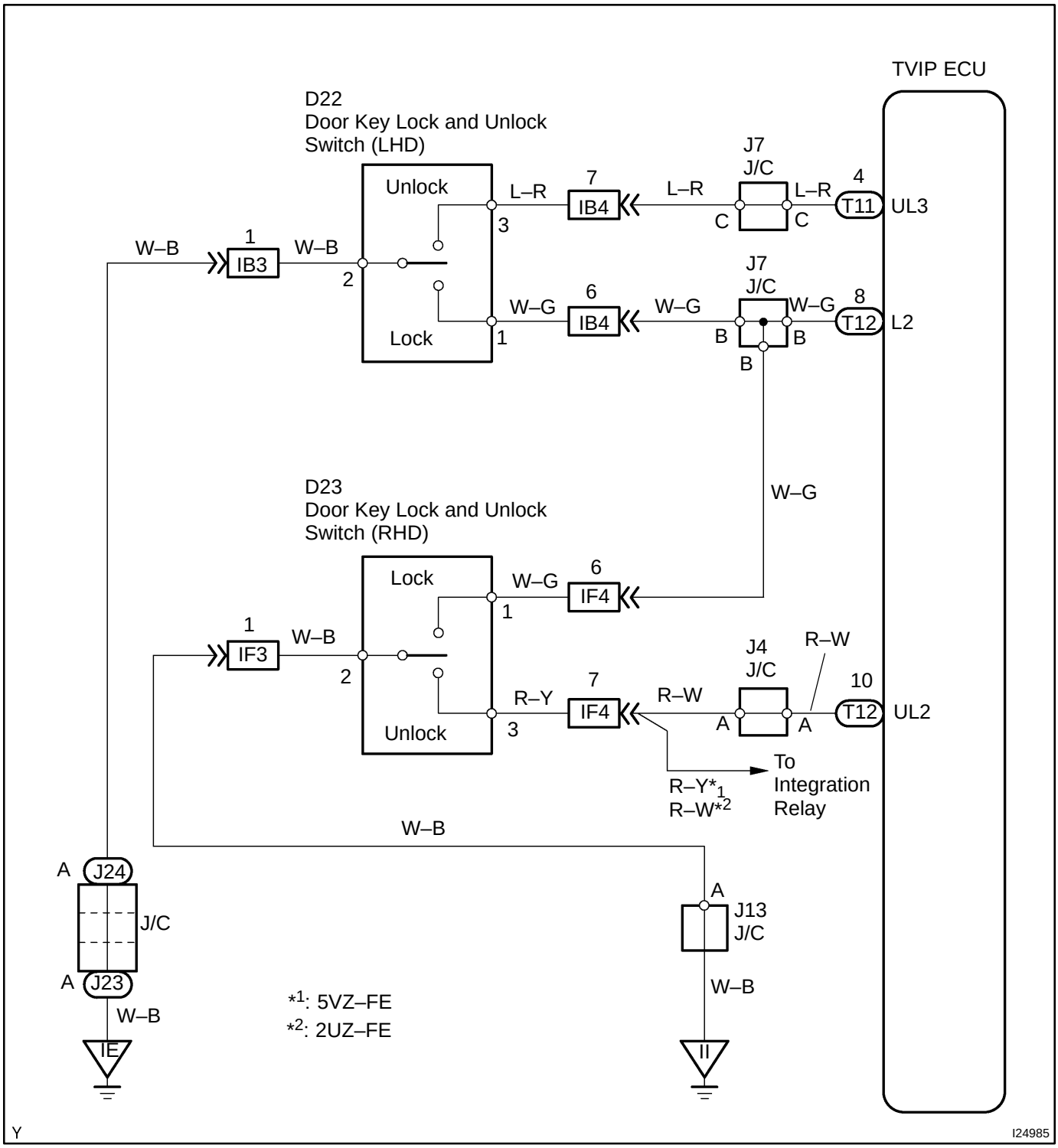

INSPECTION PROCEDURE

1	Check power door lock control system operation.

CHECK:

Check that the power door lock control system is operating normally.

NG → **Check power door lock control system (See page BE–70).**

OK

2	Check harness and connector between TVIP ECU and door key lock and unlock switch.

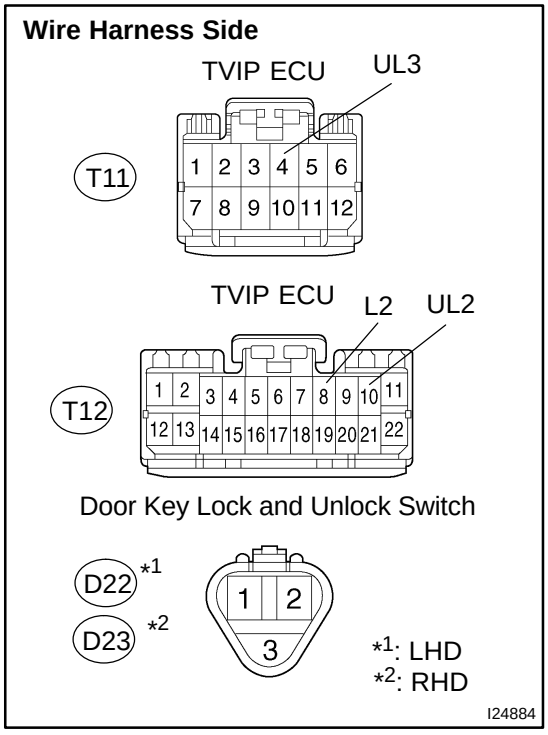

PREPARATION:

(a) Disconnect the T11 and T12 TVIP ECU connectors.

(b) Disconnect the D22 or D23 door key lock and unlock switch connector.

CHECK:

Check the continuity between the wire harness side connectors.

OK:

Symbols (Terminal No.) (TVIP ECU ↔ Door key lock and unlock switch)	Specified condition
UL3 (T11–4) ↔ – (D22–3)	Continuity
L2 (T12–8) ↔ – (D22–1)	Continuity
L2 (T12–8) ↔ – (D23–1)	Continuity
UL2 (T12–10) ↔ – (D23–3)	Continuity

NG → **Repair or replace harness or connector.**

OK

Check and replace TVIP ECU.

DIA5M–01

Door Unlock Detection Switch Circuit

CIRCUIT DESCRIPTION

The door unlock detection switch is turned on when the door lock knob is in the unlock position and turned off when the door lock knob is in the lock position. The TVIP ECU detects the condition of the door lock knob in this circuit. This switch is built in the front door lock assembly.

WIRING DIAGRAM

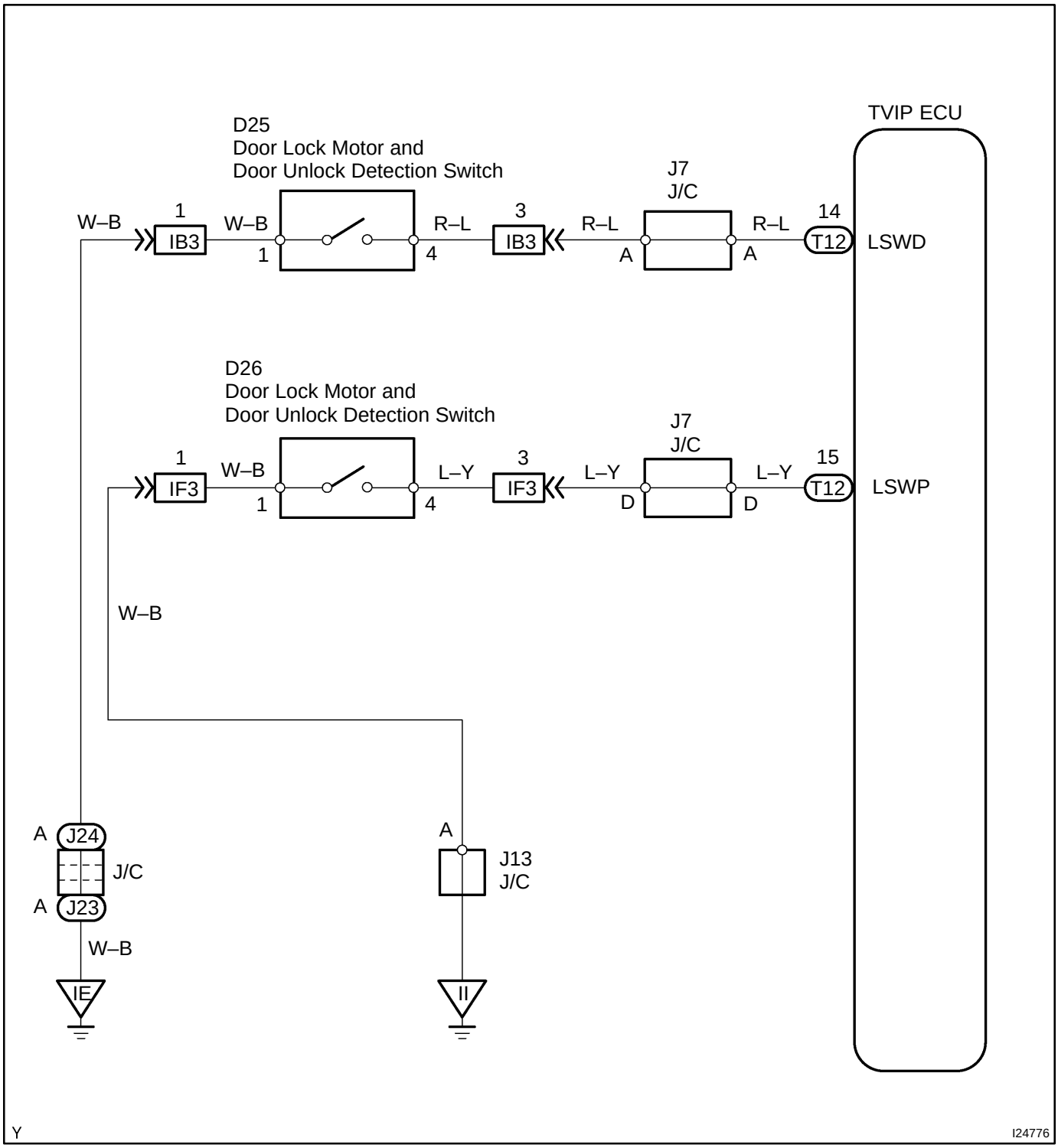

INSPECTION PROCEDURE

1	Check power door lock control system operation.

CHECK:

Check that the power door lock control system is operating normally.

NG → Check power door lock control system (See page BE–70).

OK

2	Check harness and connector between TVIP ECU and unlock detection switch.

Wire Harness Side

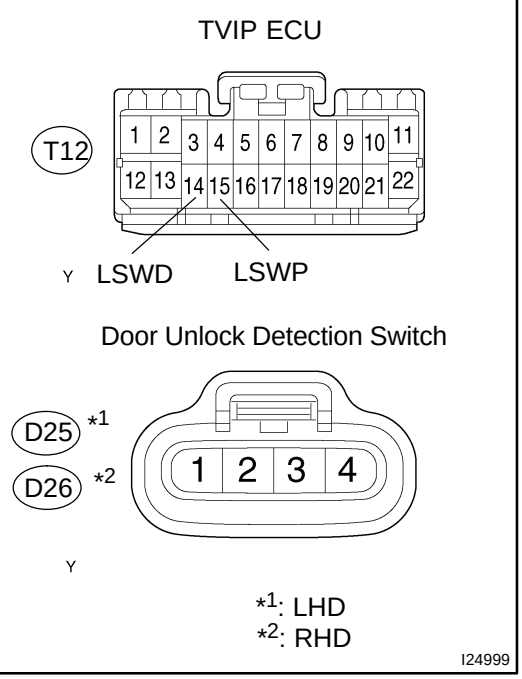

PREPARATION:

(a) Disconnect the T12 TVIP ECU connector.

(b) Disconnect the D25 or D26 door unlock detection switch connector.

CHECK:

Check the continuity between the wire harness side connectors.

OK:

Symbols (Terminal No.) (TVIP ECU ↔ Unlock detection switch)	Specified condition
LSWD (T12–14) ↔ – (D25–4)	Continuity
LSWP (T12–15) ↔ – (D26–4)	Continuity

NG → Repair or replace harness and connector.

OK

Check and replace TVIP ECU.

DIA5N–01

Door Lock Motor Circuit

WIRING DIAGRAM

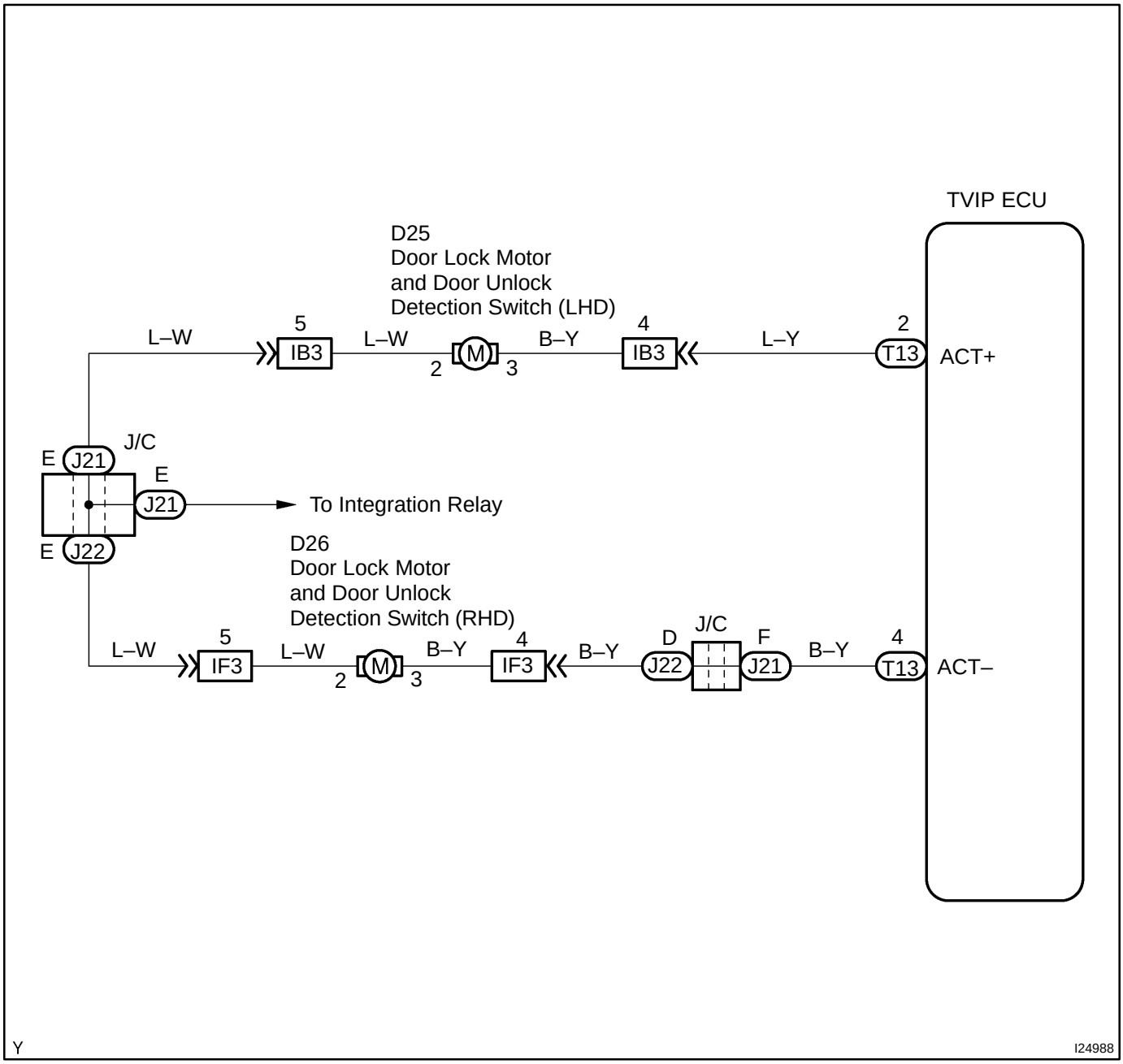

INSPECTION PROCEDURE

1	Check power door lock control system operation.

CHECK:

Check that the power door lock control system is operating normally.

NG → **Check power door lock control system (See page BE–70).**

OK ↓

2	Check harness and connector between TVIP ECU and door lock motor.

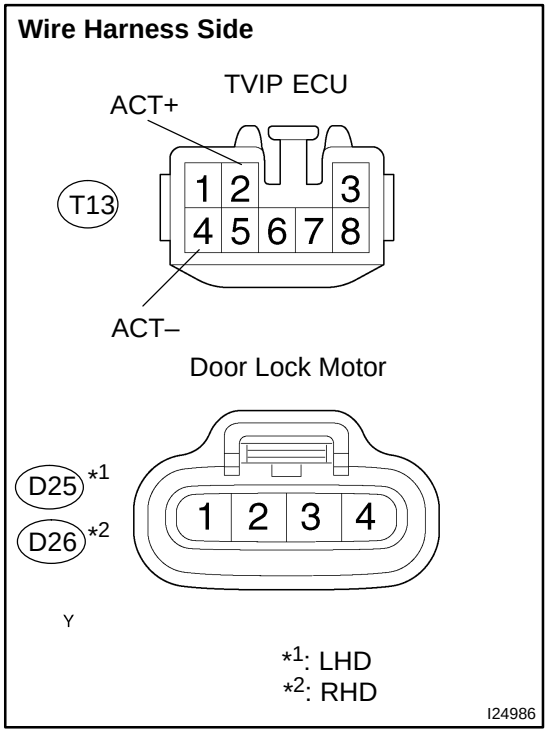

PREPARATION:

(a) Disconnect the T13 TVIP ECU connector.

(b) Disconnect the D25 or D26 unlock detection switch connector.

CHECK:

Check the continuity between the wire harness side connectors.

OK:

Symbols (Terminal No.) (TVIP ECU ↔ Door lock motor)	Specified condition
ACT+ (T13–2) ↔ – (D25–3)	Continuity
ACT– (T13–4) ↔ – (D26–3)	Continuity

NG → **Repair or replace harness and connector.**

OK ↓

Check and replace TVIP ECU.

DIA5O–01

Starter Relay Circuit (5VZ–FE)

CIRCUIT DESCRIPTION

When the TVIP system operates, the TVIP ECU controls the starter relay so that the relay should not be turned on. Consequently, the starter can not crank the engine.

WIRING DIAGRAM

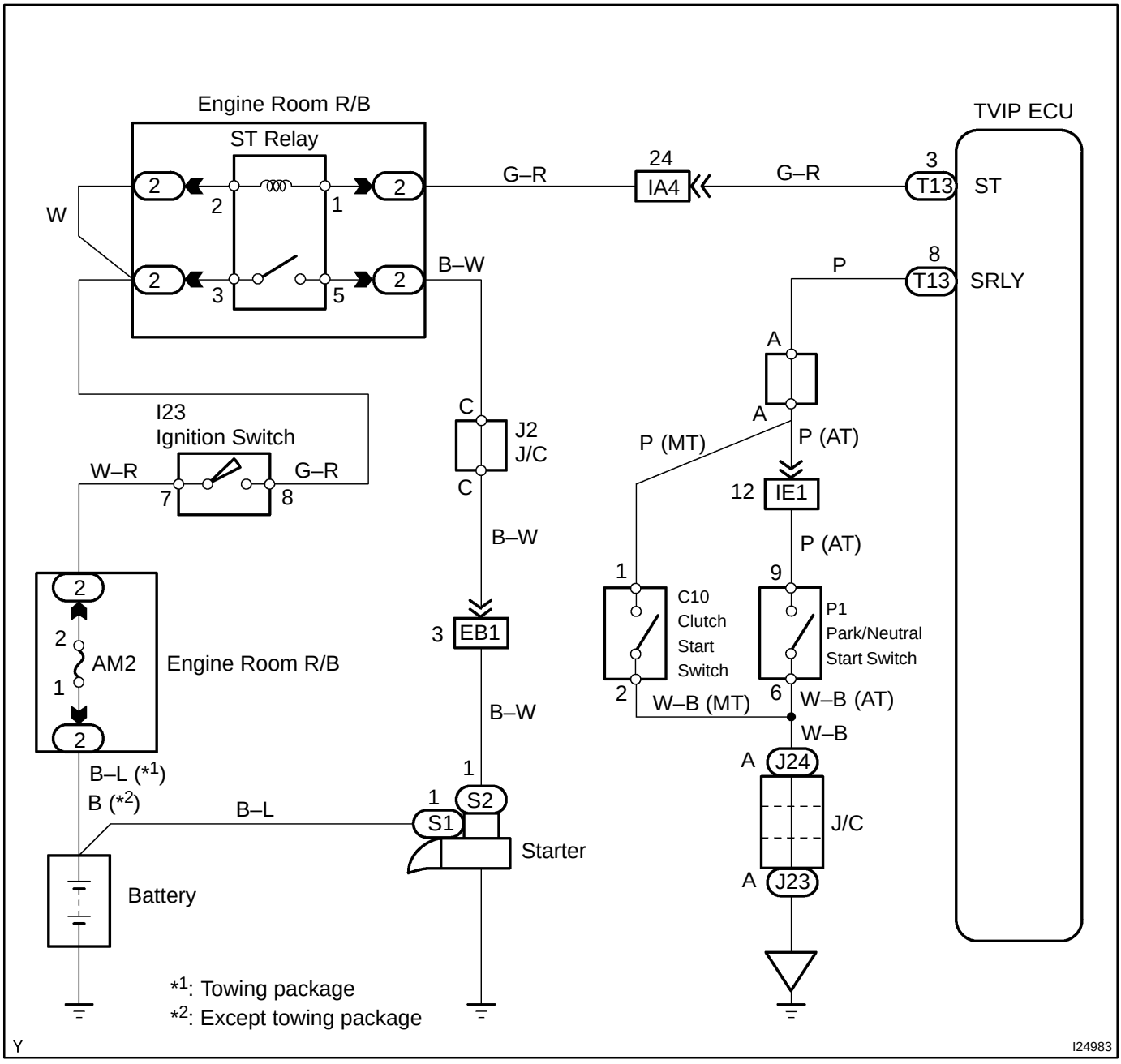

INSPECTION PROCEDURE

1	**Inspect AM2 fuse.**

PREPARATION:
Remove the fuse from the engine room relay block.
CHECK:
Check the continuity.
OK:
Continuity

NG → **Replace fuse.**

OK

2	**Inspect starter relay.**

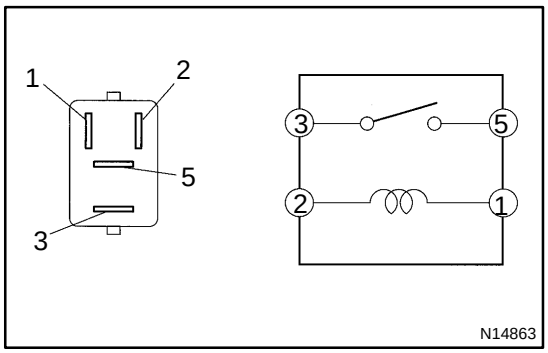

PREPARATION:
Remove the starter relay.
CHECK:
Inspect the continuity.

Terminal No.	Condition	Specified condition
1 ↔ 2	Constant	Continuity
3 ↔ 5	Apply B+ between terminals 1 and 2	Continuity

NG → **Replace relay.**

OK

3	Inspect ignition switch.

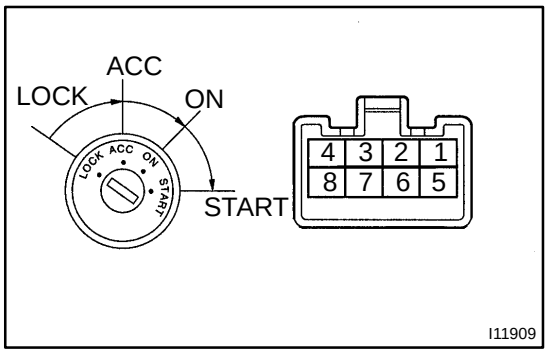

CHECK:

Check the switch continuity.

OK:

Switch position	Tester connection	Specified condition
LOCK	–	No continuity
ACC	2 – 3	Continuity
ON	2 – 3 – 4 6 – 7	Continuity
START	1 – 2 – 4 6 – 7 – 8	Continuity

NG → **Replace ignition switch.**

OK

4	Check voltage between terminal ST of TVIP ECU and body ground.

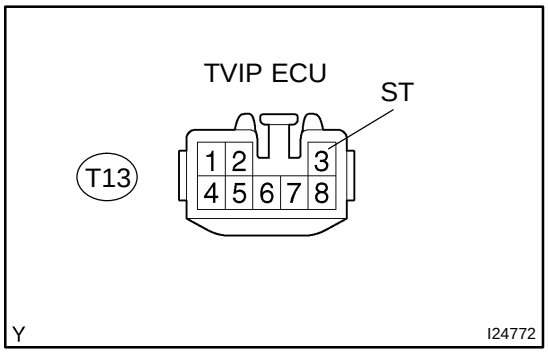

PREPARATION:

(a) Disconnect the T13 TVIP ECU connector.

(b) Turn the ignition switch to the START.

CHECK:

Check the voltage between the T13 TVIP ECU wire harness side connector and body ground.

OK:

Symbols (Terminal No.)	Specified condition
ST (T13–3) ↔ Body ground	10 – 14 V

NG → **Repair or replace harness and connector.**

OK

5	**Check harness and connector between starter and battery.**

NG → **Repair or replace harness and connector.**

OK

Check and replace TVIP ECU.

Starter Relay Circuit (2UZ–FE)

CIRCUIT DESCRIPTION

When the TVIP system operates, the TVIP ECU controls the starter relay so that the relay should not be turned on. Consequently, the starter can not crank the engine.

WIRING DIAGRAM

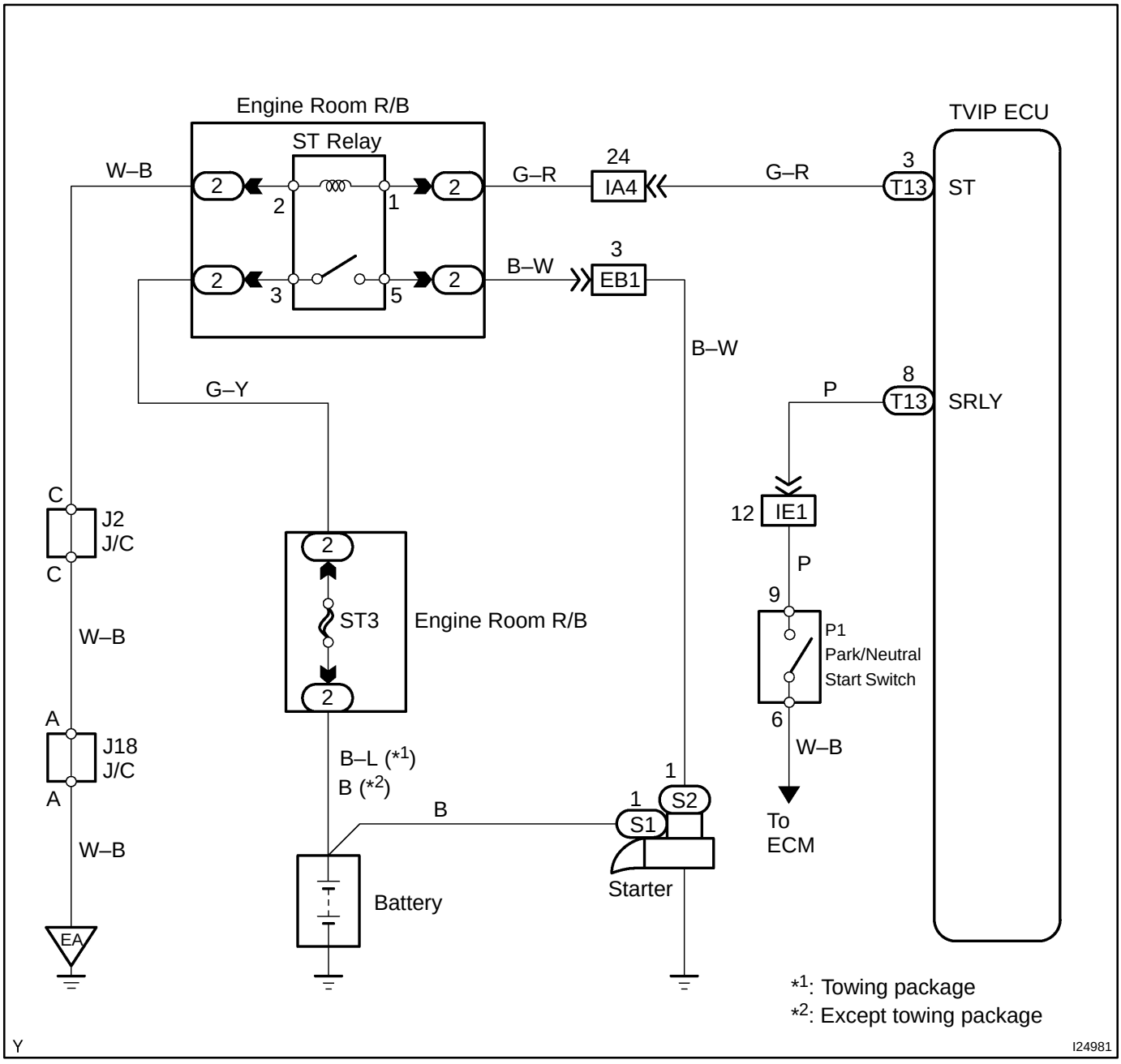

INSPECTION PROCEDURE

1	Inspect starter relay.

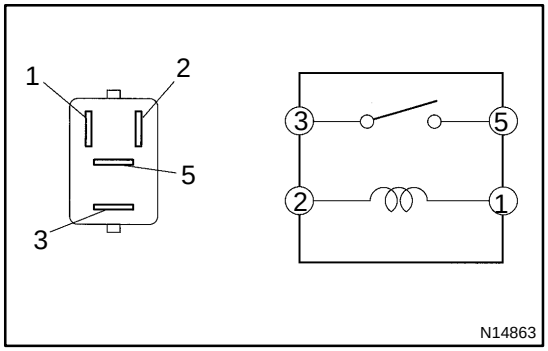

PREPARATION:
Remove the starter relay.
CHECK:
Inspect the continuity.

Terminal No.	Condition	Specified condition
1 ↔ 2	Constant	Continuity
3 ↔ 5	Apply B+ between terminals 1 and 2	Continuity

NG → **Replace relay.**

OK

2	Check continuity between terminal ST of TVIP ECU and body ground.

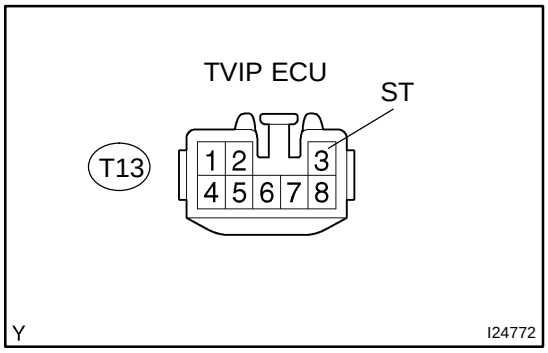

PREPARATION:
Disconnect the T13 TVIP ECU connector.
CHECK:
Check the continuity between the T13 TVIP ECU wire harness side connector and body ground.
OK:

Symbols (Terminal No.)	Specified condition
ST (T13–3) ↔ Body ground	Continuity

NG → **Repair or replace harness and connector.**

OK

3	Check harness and connector between starter and battery.

NG → **Repair or replace harness and connector.**

OK

Check and replace TVIP ECU.

Door Courtesy Switch Circuit

CIRCUIT DESCRIPTION

The door courtesy switch is turned on when the door is opened and turned off when the door is closed. The front door courtesy switch exists by itself, but on the other hand the rear door courtesy switch is built in the rear door lock assembly.

WIRING DIAGRAM

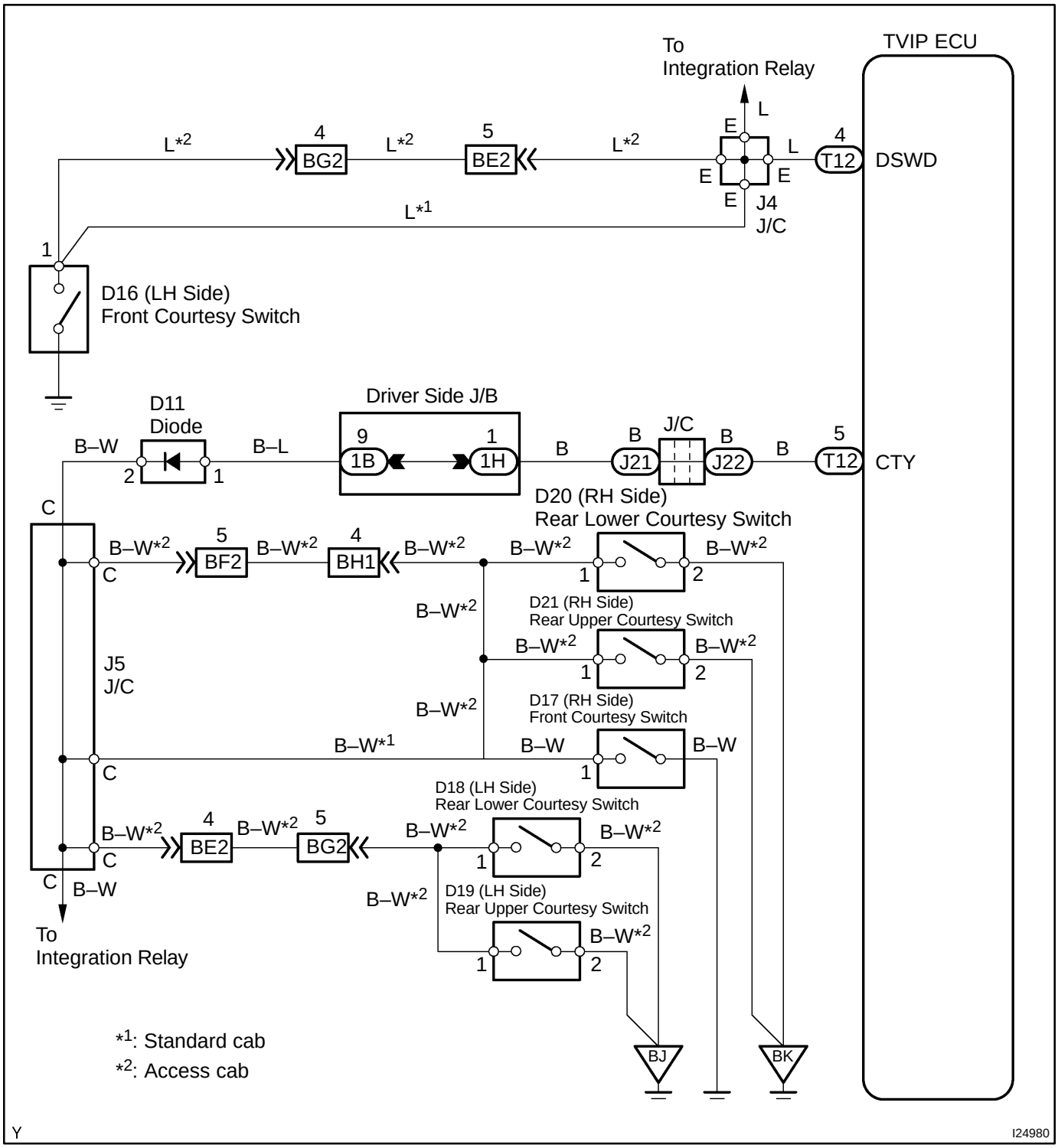

INSPECTION PROCEDURE

1	**Inspect door courtesy switches (See page BE–33).**

NG → **Replace door courtesy switch.**

OK

2	**Check voltage between terminals DSWD and CTY of TVIP ECU and body ground.**

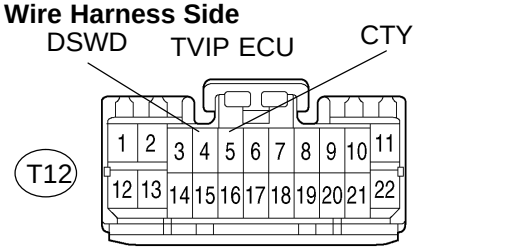

PREPARATION:

Disconnect the T12 TVIP ECU connector.

CHECK:

Check the voltage between the T12 TVIP ECU wire harness side connector and body ground.

OK:

Symbols (Terminal No.)	Condition	Specified condition
DSWD (T12–4) ↔ Body ground	Driver's door fully closed → Opened	10 – 14 V → 0 V
CTY (T12–5) ↔ Body ground	Front passenger's door fully closed → Opened	10 – 14 V → 0 V
	*Rear left door fully closed → Opened	
	*Rear right door fully closed → Opened	

*: w/ Access cab

NG → **Repair or replace harness and connector.**

OK

Check and replace TVIP ECU.

DIA5Q–01

Glass Breakage Sensor Circuit

CIRCUIT DESCRIPTION

The microphone is built in the glass breakage sensor. When this microphone picks out a sound that the glass is being broken during the alarm sounding state, the TVIP ECU issues an alarm.

WIRING DIAGRAM

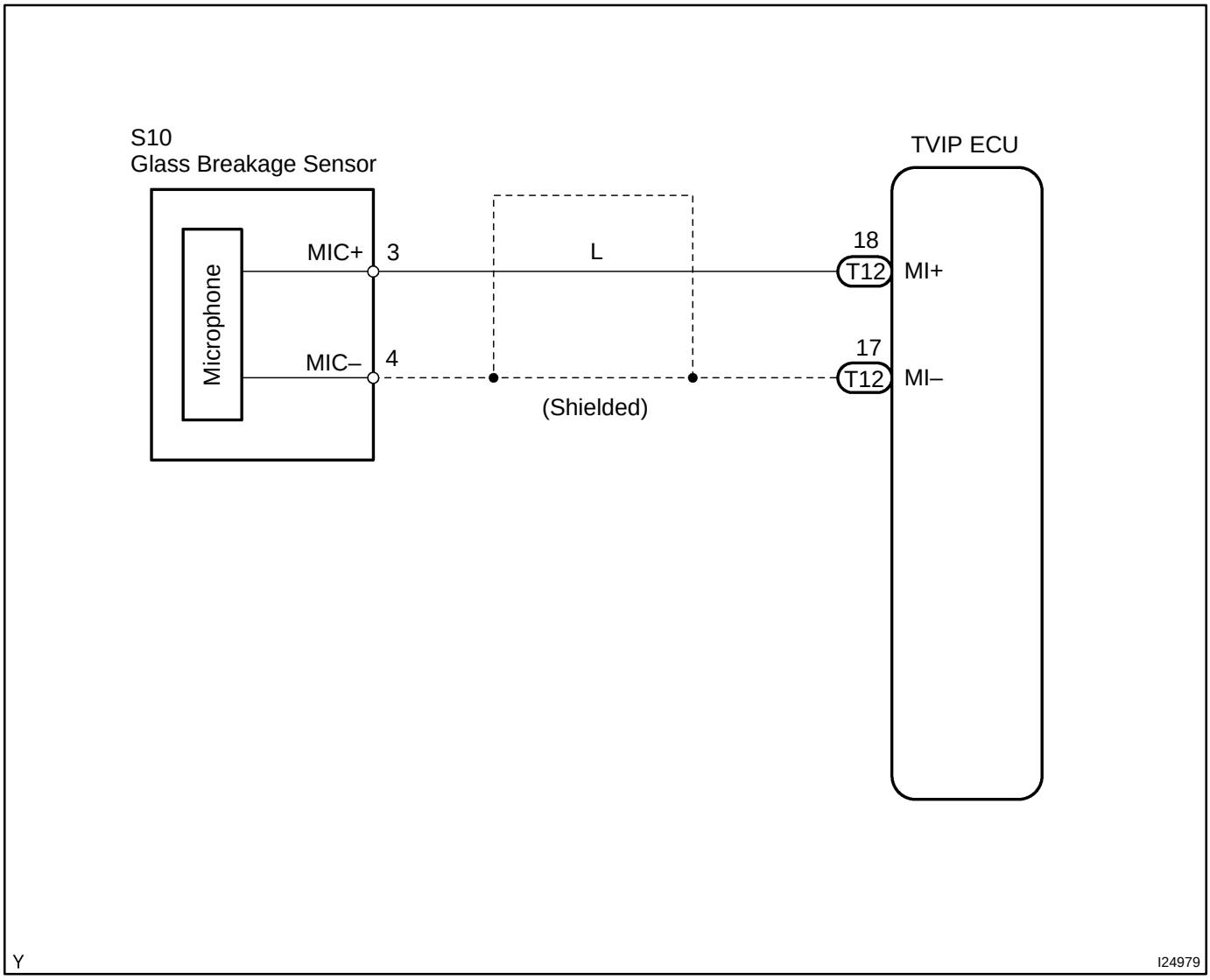

INSPECTION PROCEDURE

1	**Check security indicator.**

Set the system in 30 seconds after filliping the security indicator to check that the alarm is triggered.

OK → **No problem.**

NG

2	**Inspect glass breakage sensor.**

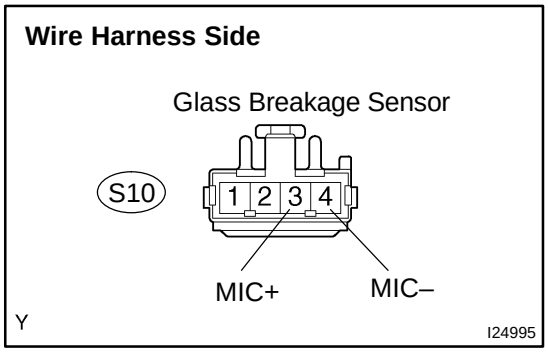

PREPARATION:

Disconnect the S10 glass breakage sensor connector.

CHECK:

Check the continuity between the terminals of the wire harness side connector.

OK:

Symbols (Terminal No.)	Specified condition
MIC+ (S10–3) ↔ MIC– (S10–4)	Continuity

NG → **Replace glass breakage sensor.**

OK

3	Check harness and connector between TVIP ECU and glass breakage sensor.

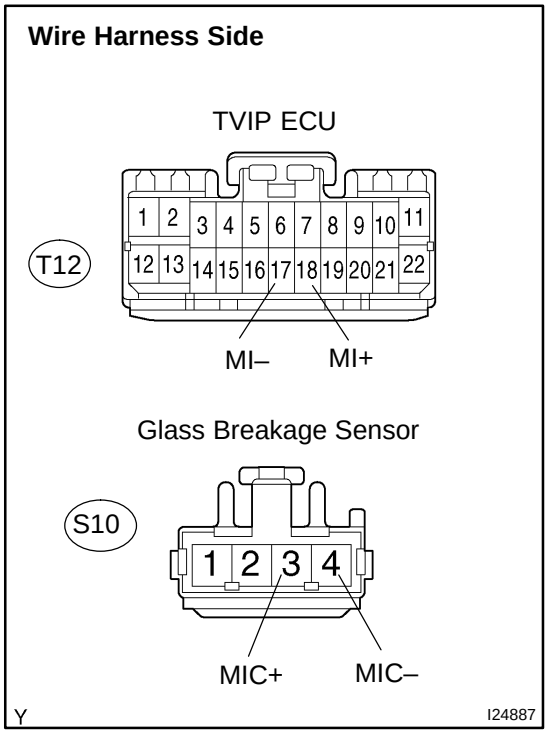

PREPARATION:

(a) Disconnect the T12 TVIP ECU connector.

(b) Disconnect the S10 glass breakage sensor connector.

CHECK:

Check the continuity between the wire harness side connectors.

OK:

Symbols (Terminal No.) (TVIP ECU ⇔ Glass breakage sensor)	Specified condition
MI+ (T12–18) – MIC+ (S10–3)	Continuity
MI– (T12–17) – MIC– (S10–4)	Continuity

NG → **Repair or replace harness or connector.**

OK →

Check and replace TVIP ECU.

DIA5R–01

TVIP Buzzer Circuit

CIRCUIT DESCRIPTION

When the wireless door lock is operated via the transmitter, the TVIP buzzer chirps as an answerback signal.

WIRING DIAGRAM

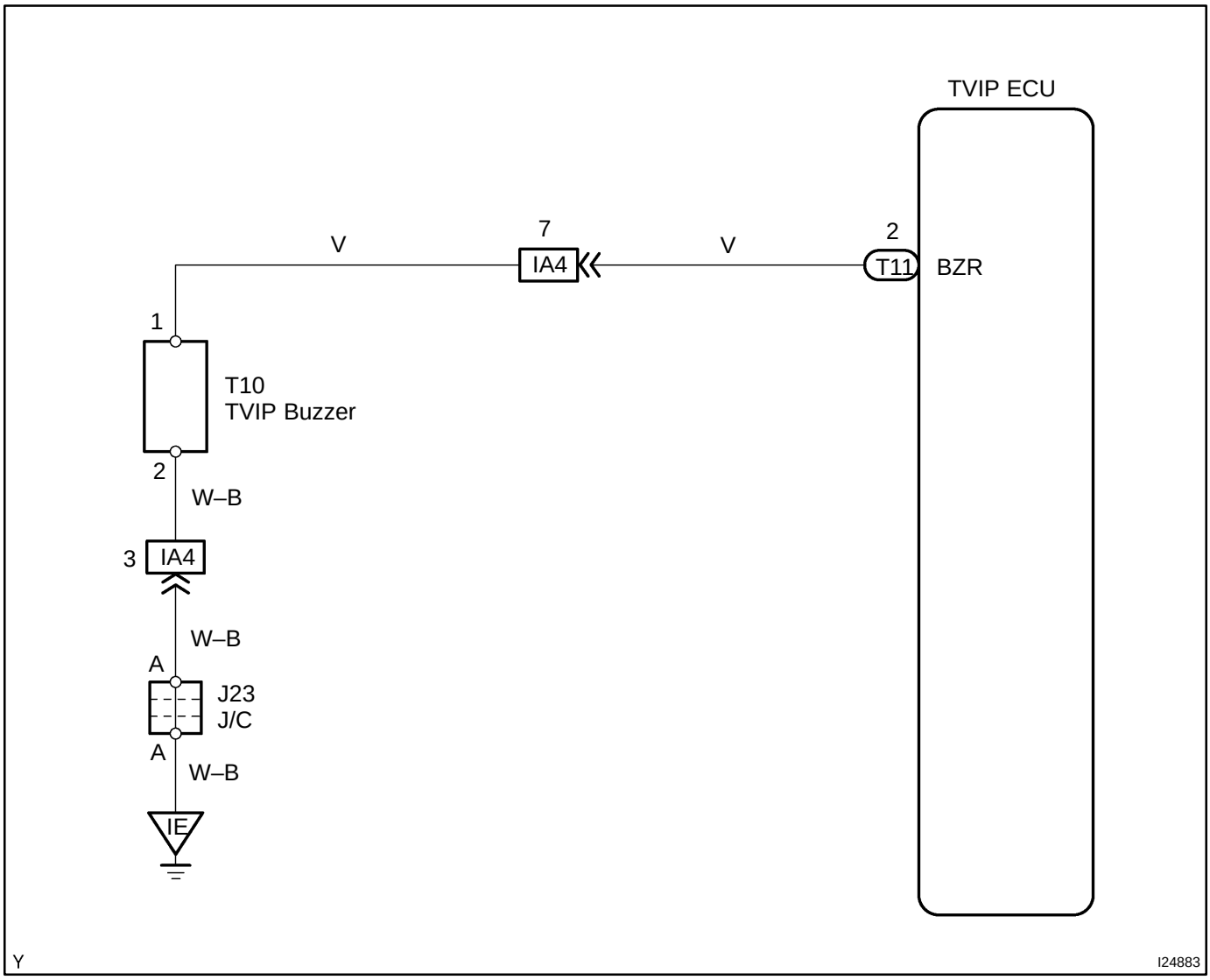

INSPECTION PROCEDURE

1	Check TVIP buzzer.

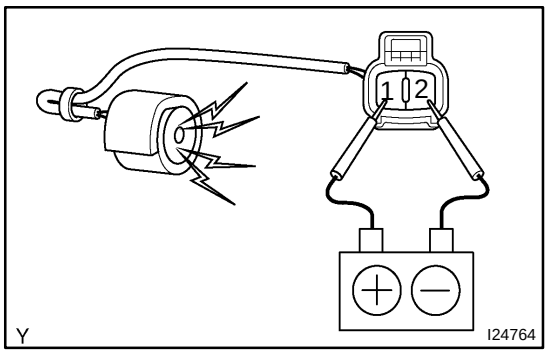

PREPARATION:

Disconnect the buzzer connector.

CHECK:

Connect the positive (+) lead from the battery to terminal 1 and negative (–) lead to terminal 2 of the buzzer connector, and check that the TVIP buzzer chirps.

OK:

Measuring condition	Operation
Battery positive (+) ↔ Terminal 1 Battery negative (–) ↔ Terminal 2	Buzzer chirps

NG → **Replace TVIP buzzer.**

OK

2	Check harness and connector between TVIP ECU and TVIP buzzer.

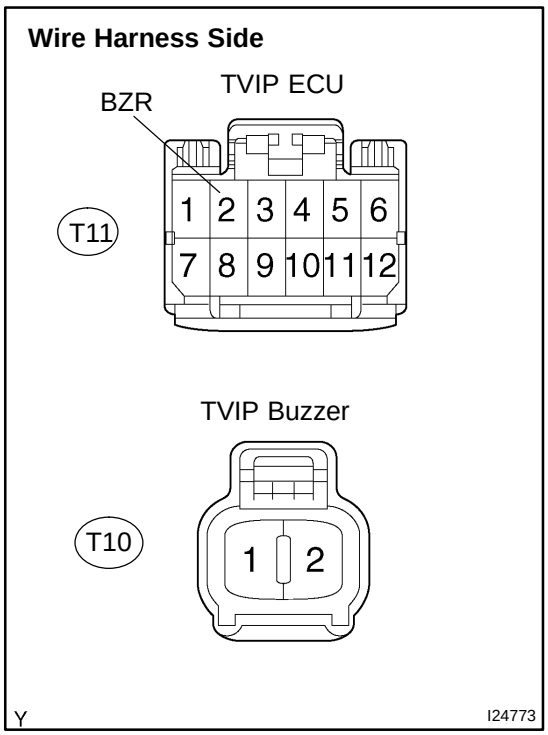

PREPARATION:

(a) Disconnect the T11 TVIP ECU connector.

(b) Disconnect the T10 TVIP buzzer connector.

CHECK:

Check the continuity between the wire harness side connectors.

OK:

Symbols (Terminal No.) (TVIP ECU ↔ TVIP buzzer)	Specified condition
BZR (T11–2) ↔ – (T10–1)	Continuity

NG → **Repair or replace harness and connector.**

OK

3	Check harness and connector between TVIP buzzer and body ground.

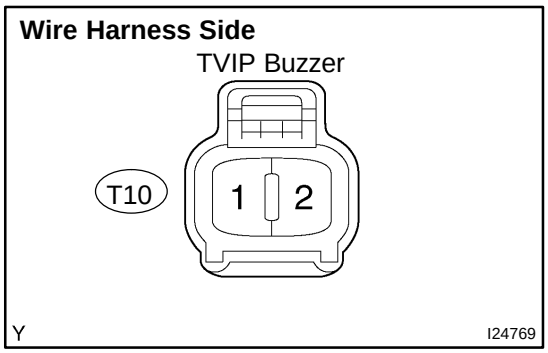

PREPARATION:

Disconnect the T10 TVIP buzzer connector.

CHECK:

Check the continuity between the T10 TVIP buzzer wire harness side connector and body ground.

OK:

Terminal No. (TVIP buzzer ↔ Body ground)	Specified condition
T10–2 ↔ Body ground	Continuity

NG → **Repair or replace harness and connector.**

OK →

Check and replace TVIP ECU.

CRUISE CONTROL SYSTEM (5VZ–FE)

DI663–03

HOW TO PROCEED WITH TROUBLESHOOTING

Troubleshooting in accordance with the procedure on the following pages.

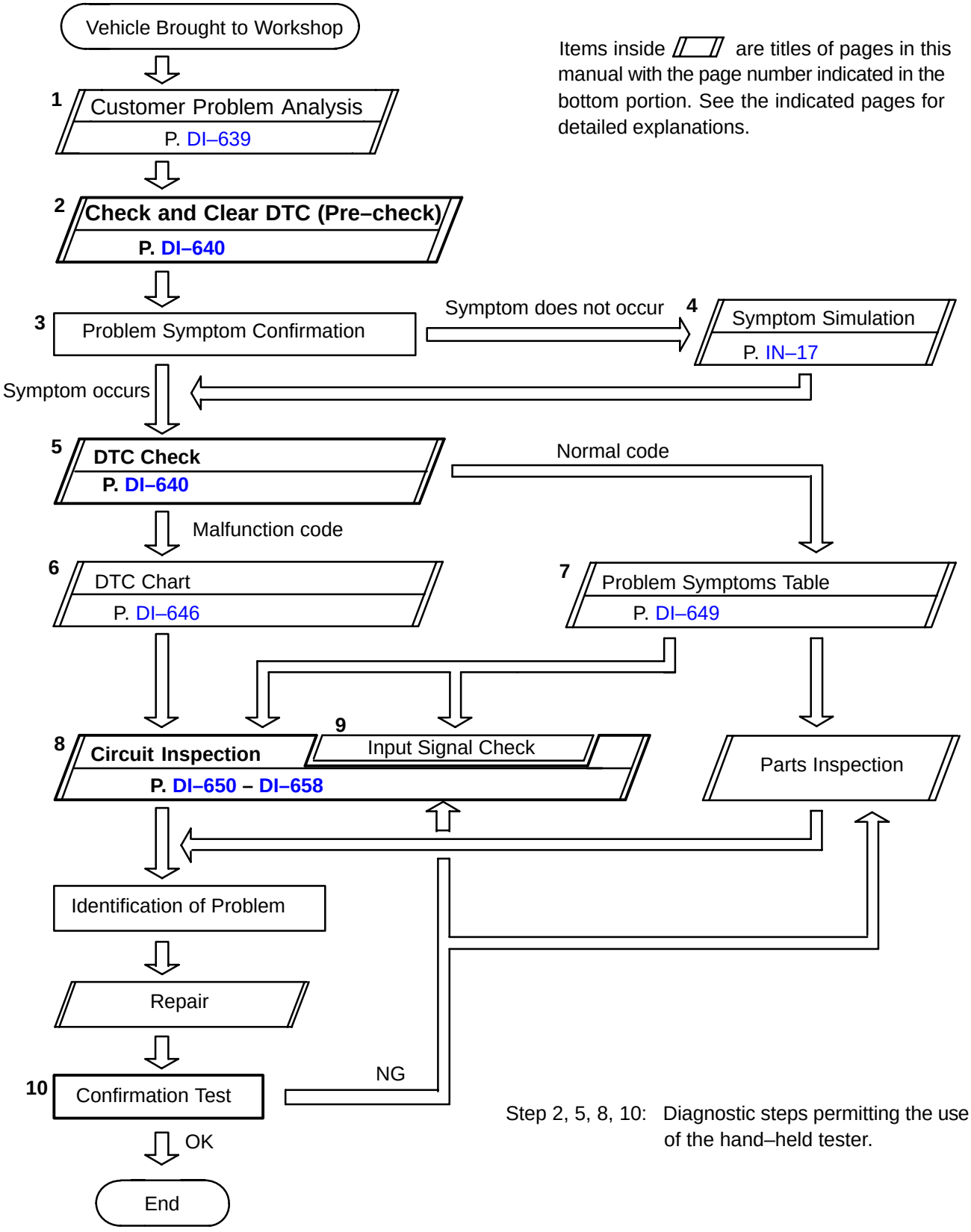

Items inside ▱ are titles of pages in this manual with the page number indicated in the bottom portion. See the indicated pages for detailed explanations.

Step 2, 5, 8, 10: Diagnostic steps permitting the use of the hand–held tester.

DI0YJ–04

CUSTOMER PROBLEM ANALYSIS CHECK

CRUISE CONTROL SYSTEM Check Sheet

Inspector's name: _____

Customer's Name		**Registration No.**	
		Registration Year	
		Frame No.	
Date of Vehicle Brought in	/ /	**Odometer Reading**	**km Mile**

Condition of Problem Occurrence	**Date of Problem Occurrence**	/ /
	How Often does Problem Occur?	☐ Continuous ☐ Intermittent (Times a day)
	Vehicle Speed when Problem Occurred	**km mile**

Symptoms	☐ Auto cancel occurs	◀Driving condition City driving Freeway Uphill Downhill ◀After cancel occurred, did the driver activate cruise control again? Yes No
	Cancel does not occur	With brake depressed Except D position shift At 40 km/h (25 mph) or less When control SW turns to CANCEL position
	Cruise control malfunction	Slip to acceleration side Slip to deceleration side Hunting occurs O/D cut off does not occur O/D does not return
	Switch malfunction	+ RES – SET CANCEL
	CRUISE MAIN indicator light	Remains ON Does not light up Blinking

DTC Check	**1st Time**	Normal Code	Malfunction Code (Code)
	2nd Time	Normal Code	Malfunction Code (Code)

DIA7R–01

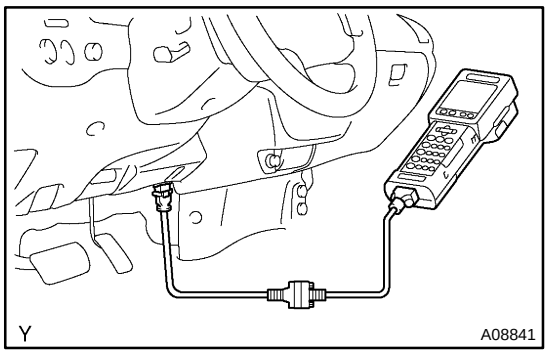

PRE–CHECK

1. DIAGNOSIS SYSTEM

(a) Description

The ECM controls the cruise control function on this vehicle. Data of the cruise control or DTC can be read from the DLC3 of the vehicle. When cruise control function has a trouble, check CRUISE MAIN indicator does not light up but DTC inspection is performed.

Therefore, when the cruise control function seems to have a trouble, use the hand–held tester or SST to check and troubleshoot it.

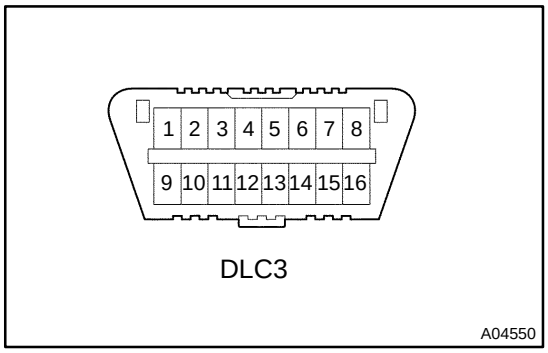

(b) Check the DLC3.

The vehicle's ECM uses the ISO 9141–2 for communication. The terminal arrangement of the DLC3 complies with the SAE J1962 and matches the ISO 9141–2 format.

Terminal No.	Connection/Specified Condition	Condition
7	Bus+ Line/Pulse generation	During transmission
4	Chassis Ground ↔ Body Ground/1 Ω or less	Always
16	Battery Positive ↔ Body Ground/9 – 14 V	Always

HINT:

If the display shows "UNABLE TO CONNECT TO VEHICLE" when you have connected the cable of the hand–held tester to the DLC3, turned the ignition switch ON and operated the hand–held tester, there is a problem on the vehicle side or tool side.

- If the communication is normal when the tool is connected to another vehicle, inspect the DLC3 on the original vehicle.
- If the communication is still impossible when the tool is connected to another vehicle, the problem is probably in the tool itself, so consult the Service Department listed in the tool's instruction manual.

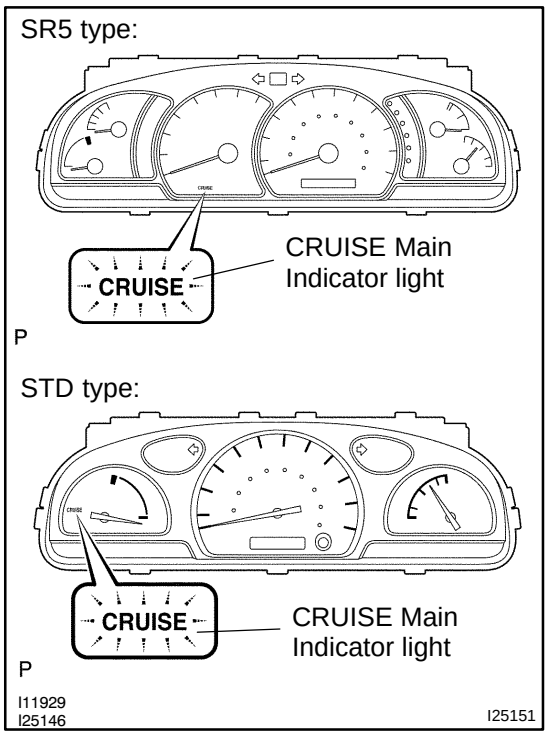

(c) Check the indicator.
(1) Turn the ignition switch ON.
(2) Check that the CRUISE MAIN indicator light comes on when the cruise control main switch is turned ON, and check that the indicator light goes off when the main switch is turned OFF.

HINT:
If the indicator check result is abnormal, proceed to troubleshooting (See page BE–2) of the combination meter section.

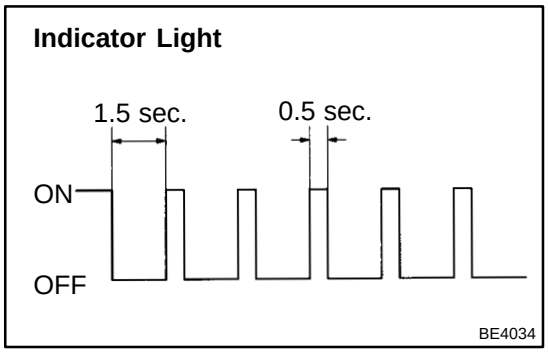

(d) Check the DTC.

HINT:
If a malfunction occurs in the speed sensor or actuator, etc. during cruise control driving, the ECU actuates AUTO CANCEL of the cruise control and turns ON and OFF the CRUISE MAIN indicator light to inform the driver of a malfunction. At the same time, the malfunction is stored in the memory as a DTC.

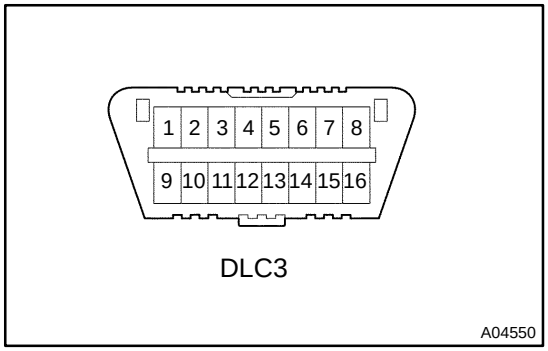

(e) Output a DTC using a diagnosis check wire.
(1) Turn the ignition switch ON.
(2) Using SST, connect terminals Tc and CG of the DLC3.
SST 09843–18020
(3) Read the DTC on the CRUISE MAIN indicator light.

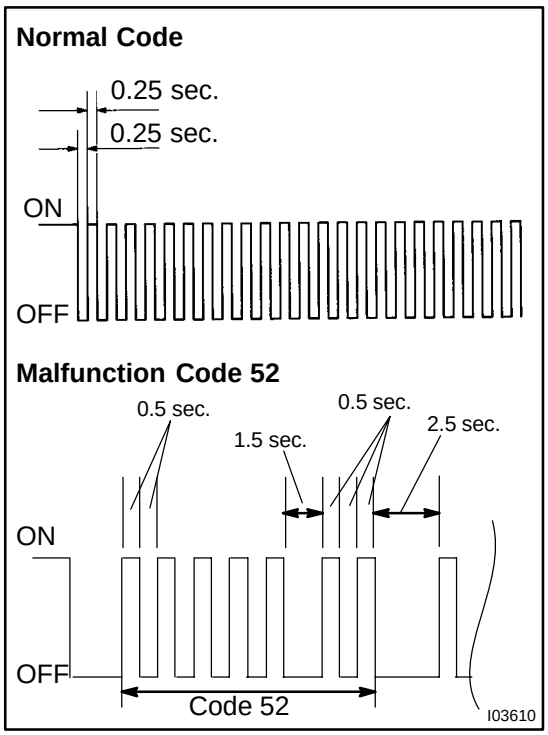

HINT:

- If a DTC is not output, inspect the diagnosis circuit.
- As an example, the blinking patterns of codes; normal and 52 are shown in the illustration.

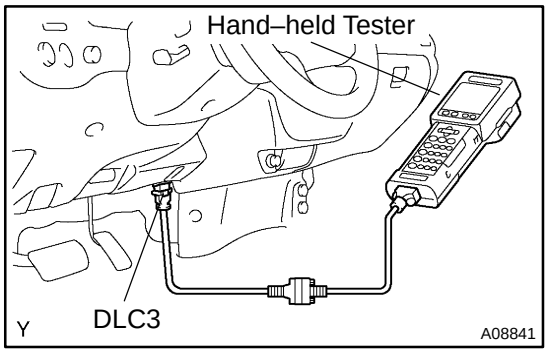

2. MONITOR ECM DATA BY USING HAND–HELD TESTER

(a) Connect the hand–held tester to the DLC3.
(b) Monitor the ECM data by following the prompts on the tester screen.

HINT:

The hand–held tester has a ”Snapshot” function which records the monitored data.

Please refer to the hand–held tester operator’s manual for further details.

3. DATA LIST

HINT:

According to the DATA LIST displayed by the hand–held tester, you can read the value of the switch, sensor, actuator and so on without parts removal. Reading the DATA LIST as a first step of troubleshooting is one of the method to shorten the labor time.

(a) Connect the hand–held to the DLC3.
(b) Turn the ignition switch ON.
(c) According to the display on the tester, read the ”DATA LIST”.

Item	Measurement Item / Display (Range)	Normal Condition	Diagnostic Note
VEHICLE SPD	Vehicle speed/min.: 0 km/h (0 mph), max.: 255 km/h (158 mph)	Actual vehicle speed	–
STP LIGHT SW	Stop light SW signal/ON or OFF	ON: Brake pedal depressed OFF: Brake pedal released	–

4. DTC CLEARANCE

(a) The following actions will erase DTCs and freeze frame data.
  (1) Hand–Held Tester:
  Operating the hand–held tester to erase codes.
  (2) Except Hand–Held Tester:
  Disconnecting the battery terminals or the EFI fuse for 10 seconds or more.

(b) After completing repairs, the DTC retained in the memory can be cleared by removing the EFI fuse for 10 seconds or more with the ignition switch OFF.

(c) Check that the normal code is displayed after connecting the fuse.

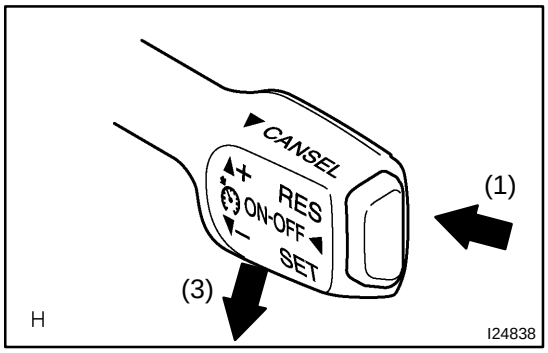

5. PROBLEM SYMPTOM CONFIRMATION (ROAD TEST)

(a) Inspect the SET switch.
  (1) Push the main switch ON.
  (2) Drive at the see speed (40 km/h (25 mph) or higher).
  (3) Press the control switch downward for the –/SET.
  (4) Release the switch, and check that the vehicle cruises at the set speed.

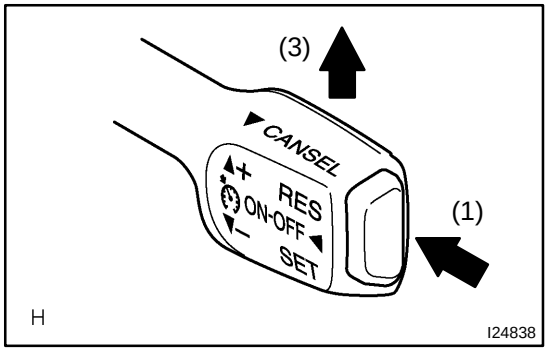

(b) Inspect the ACCEL switch.
  (1) Push the main switch ON.
  (2) Drive at the see speed (40 km/h (25 mph) or higher).
  (3) Check that the vehicle speed increases while the control switch is turned to +/RES, and that the vehicle cruises at the set speed when the switch is released.
  (4) Momentarily push the control switch upward in the +/RES direction and then immediately release it. Check that the vehicle speed increases by about 1.5 km/h (Tap–up function).

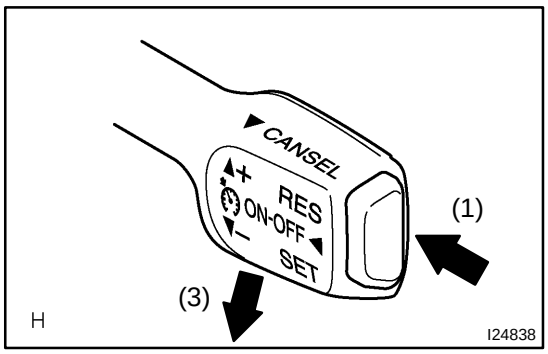

(c) Inspect the COAST switch.
(1) Push the main switch ON.
(2) Drive at the set speed (40 km/h (25 mph) or higher).
(3) Check that the vehicle speed decreases while the control switch is turned to –/SET, and the vehicle cruises at the set speed when the switch is released.
(4) Momentarily push the control switch downward for the –/SET, and then immediately release it. Check that the vehicle speed decreases by about 1.5 km/h (Tap–down function).

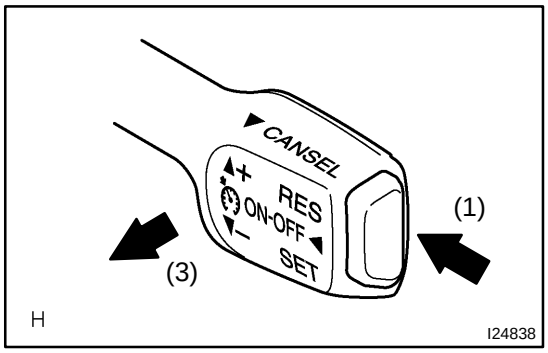

(d) Inspect the CANCEL switch.
(1) Push the main switch ON.
(2) Drive at the set speed (40 km/h (25 mph) or higher).
(3) When operating one of the followings, check that the cruise control system is cancelled and that the normal driving mode is reset.
▲ Depress the brake pedal.
▲ Shift into any positions except the D position.
▲ Push the main switch OFF.
▲ Pull the cruise control switch for CANCEL.

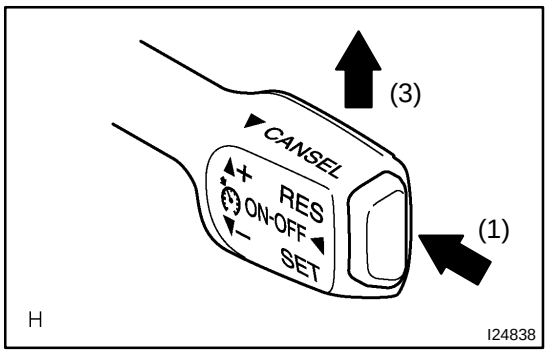

(e) Inspect the RESUME switch.
(1) Push the main switch ON.
(2) Drive at the set speed (40 km/h (25 mph) or higher).
(3) When operating one of the followings, check that the cruise control system is cancelled and that the normal driving mode is reset.
▲ Depress the brake pedal.
▲ Shift into any positions except the D position.
▲ Pull the cruise control switch for CANCEL.
(4) Turn the control switch to +/RES at the driving speed of more than 40 km/h (25 mph), and check that the vehicle restores the speed before the cancellation.

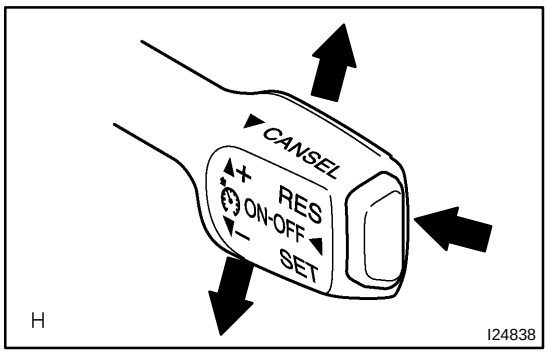

6. INPUT SIGNAL CHECK BY USING HAND–HELD TESTER

(a) Connect the hand–held tester to the DLC3.

(b) Check the control switches (ON–OFF, CANCEL, –/SET, +/RES).

DI0YN–05

DIAGNOSTIC TROUBLE CODE CHART

If a malfunction code is displayed during the DTC check, check the circuit listed by code in the table below and proceed to the appropriate page.

DTC No. (See page)	Detection Item	Trouble Area
P0500/21 (DI–133)	Vehicle Speed Sensor ”A”	▲Combination meter ▲Open or short in vehicle speed sensor circuit ▲Vehicle speed sensor ▲ECM
P0503/23 (DI–133)	Vehicle Speed Sensor ”A” Intermittent/Erratic/High	▲Combination meter ▲Open or short in vehicle speed sensor circuit ▲Vehicle speed sensor ▲ECM
P0571/52 (DI–137)	Brake Switch ”A” Circuit	▲Short in stop light switch circuit ▲Stop light switch ▲ECM
P0607/54 (DI–138)	Control Module Performance	▲ECM

DI0YO–06

PARTS LOCATION

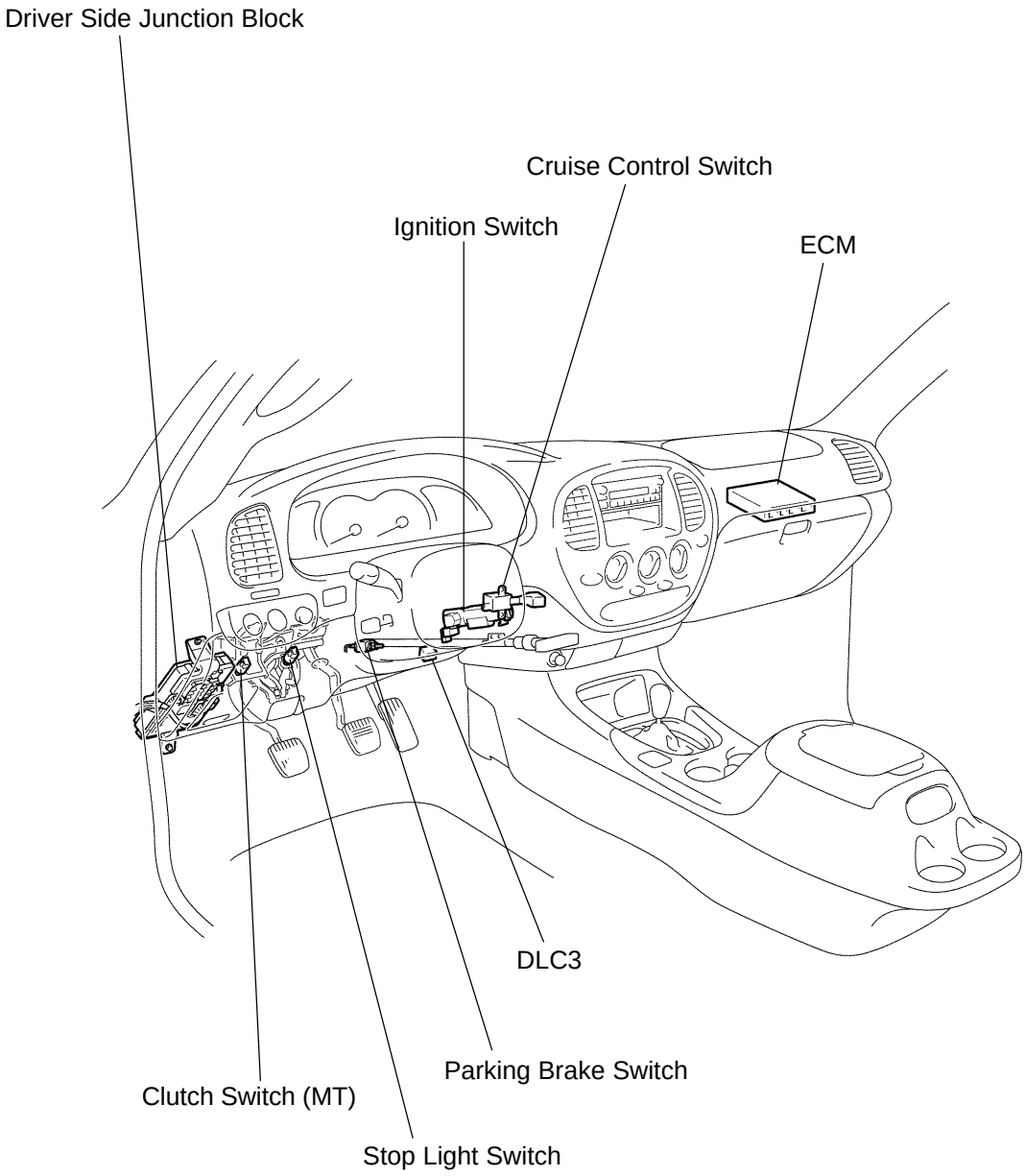

P

I25142

DI665–03

TERMINALS OF ECU

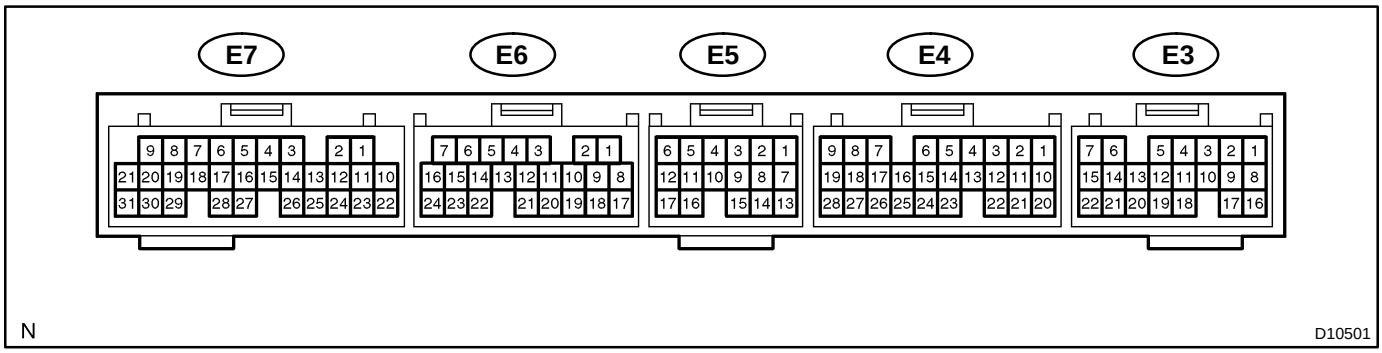

Symbols (Terminals No.)	Wiring Color	Condition	STD Voltage (V)
STP (E3–20) ↔ E1 (E6–17)	G–W ↔ BR	Brake pedal is depressed	7.5 – 14 V
		Brake pedal is released	0 – 1.5 V
CCS (E4–22) ↔ E1 (E6–17)	G ↔ BR	Ignition switch ON	9.0 – 14 V
		Ignition switch ON CANCEL switch held ON	6.0 – 10.1 V
		Ignition switch ON –/SET switch held ON	4.0 – 7.1 V
		Ignition switch ON +/RES switch held ON	2.1 – 4.0 V
		Ignition switch ON Main switch held ON	Below 1 V
PI (E3–17) ↔ E1 (E6–17)	Y ↔ BR	Ignition switch ON Cruise control main switch ON	0 – 3.0 V
		Ignition switch ON Cruise control main switch OFF	9 – 14 V
ST1– (E4–9) ↔ E1 (E6–17)	L–R ↔ BR	Brake pedal is depressed	0 – 1.5 V
		Brake pedal is released	7.5 – 14 V
D (E4–25) ↔ E1 (E6–17)	W–R ↔ BR	Ignition switch ON A/T models: Shifting into D range M/T modes: Clutch pedal is released	9 – 14 V
		Ignition switch ON A/T models: Shifting into any positions except D range M/T modes: Clutch pedal is depressed	0 – 1.5 V

DI0YQ–05

PROBLEM SYMPTOMS TABLE

Symptom	Suspect Area	See page
SET does not occur or CANCEL occurs (DTC is Normal)	3. Vehicle Speed Sensor Circuit 4. Stop Light Switch Circuit 5. Park/Neutral Position Switch (A/T), Clutch Switch Circuit (M/T) 6. ECM	DI–650 DI–651 DI–408 DI–653 IN–27
SET does not occur or CANCEL occurs (DTC is not output)	ECM	IN–27
Actual vehicle speed deviates above or below the set speed	1. ECM	IN–27
Gear shifting occurs frequently between 3rd and O/D when driving on uphill road (Hunting)	ECM	IN–27
Cruise control can not be cancelled even when brake pedal is depressed	1. Stop Light Switch Circuit 2. ECM	DI–651 IN–27
Cruise control can not be cancelled even when transmission is shifted to ”N” position	1. Park/Neutral Position Switch (A/T) 2. ECM	DI–408 IN–27
Cruise control can not be cancelled even when clutch pedal is depressed	ECM	IN–27
Control switch does not operate (–/SET, +/RES, CANCEL not possible)	ECM	IN–27
SET is possible at 40 km/h (25 mph) or less, or CANCEL does not operate at 40 km/h (25 mph) or less	ECM	IN–27
Poor response in ACCEL and RESUME modes	ECM	IN–27
O/D does not resume even though the road is not uphill	ECM	IN–27
DTC memory is erased	ECM	IN–27
DTC is not output, or is output when should not be	1. Diagnosis Circuit 2. ECM	– IN–27
”CRUISE MAIN” indicator light remains ON or fails to light up	ECM	IN–27
”CRUISE MAIN” indicator does not light up	CRUISE MAIN Indicator Light Circuit	DI–656

DIA7S–01

CIRCUIT INSPECTION

DTC	P0500/21	Vehicle Speed Sensor ”A”

DTC	P0503/23	Vehicle Speed Sensor ”A” Intermittent/Erratic/High

CIRCUIT DESCRIPTION

See page DI–133.

DTC No.	DTC Detection Condition	Trouble Area
P0500/42 P0503/23	No vehicle speed sensor signal to ECM under following conditions (a) and (b): (2 trip detection logic) (a) Park/neutral position switch is OFF (b) Vehicle is being driven	▲Combination meter ▲Open or short in vehicle speed sensor circuit ▲Vehicle speed sensor ▲ECM

WIRING DIAGRAM

See page DI–133.

INSPECTION PROCEDURE

See page DI–133.

DIA7X–01

DTC	P0571/52	Brake Switch ”A” Circuit

CIRCUIT DESCRIPTION

See page DI–137.

DTC No.	DTC Detection Condition	Trouble Area
P0571/52	Stop light switch does not turn off even once the vehicle is driven (2 trip detection logic)	▲Short in stop light switch signal circuit ▲Stop light switch ▲ECM

WIRING DIAGRAM

See page DI–137.

INSPECTION PROCEDURE

See page DI–137.

DIA7T–01

DTC	P0607/54	Control Module Performance

CIRCUIT DESCRIPTION

See page DI–138.

DTC No.	DTC Detecting Condition	Trouble Area
P0606/36 P0607/54	ECM malfunction	▲ECM

WIRING DIAGRAM

See page DI–138.

INSPECTION PROCEDURE

See page DI–138.

DIA7U–01

Clutch Switch Circuit (M/T)

CIRCUIT DESCRIPTION

When the clutch pedal is depressed, the clutch switch sends a signal to the ECM. When the signal is input to the ECM during cruise control driving, the ECM cancels the cruise control.

WIRING DIAGRAM

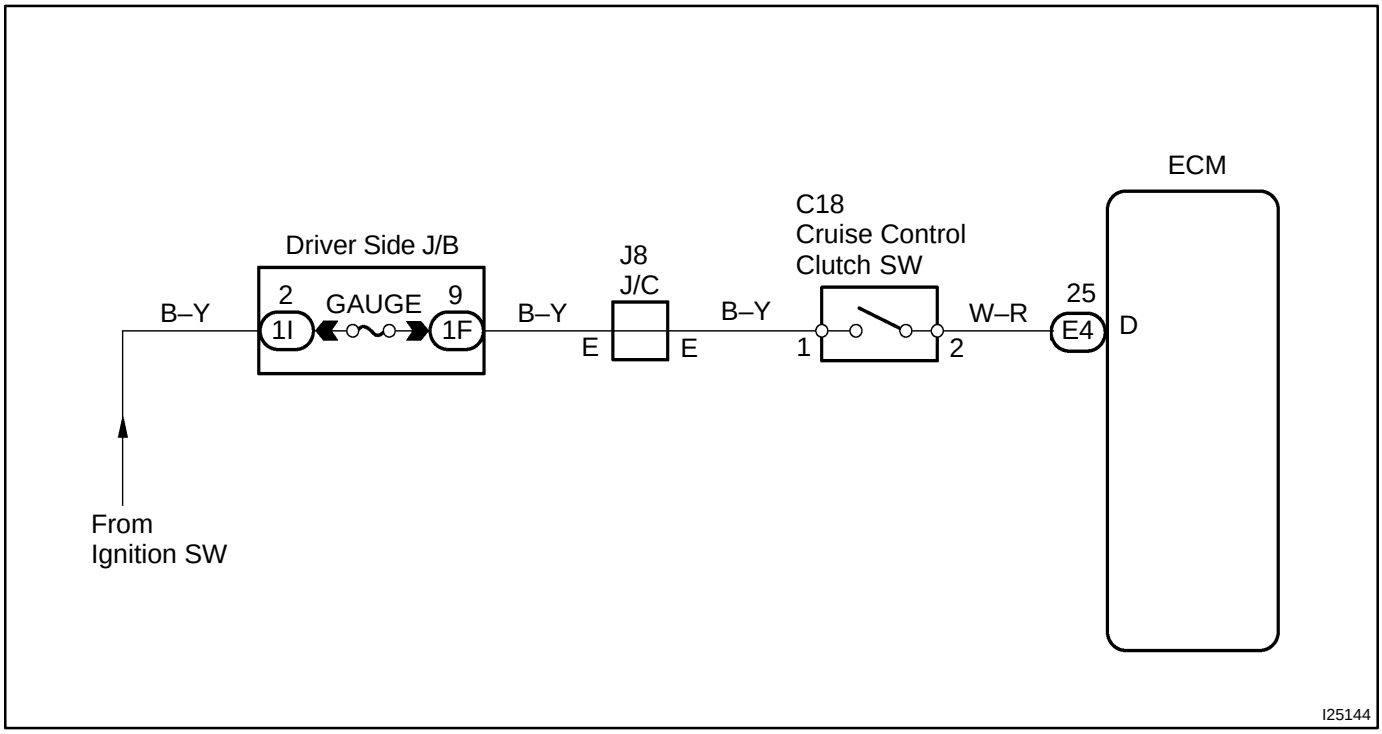

INSPECTION PROCEDURE

1	**Check starter operation.**

CHECK:

Check that the starter operates normally and that the engine starts.

NG → **Proceed to engine troubleshooting.**

OK

2	Check input signal.

Input Signal	Indicator Light Blinking Pattern
Turn PNP Switch OFF (Shift into positions except D)	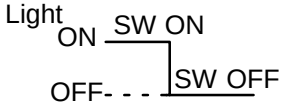

PREPARATION:

See the input signal check on page DI–640.

CHECK:

Check the indicator light when shifting into any positions except D.

OK:

The indicator light goes off when shifting into any positions except D.

OK	Proceed to next circuit inspection shown in problem symptoms table (See page DI–649).

NG

3	Check voltage between terminal D of ECM connector and body ground.

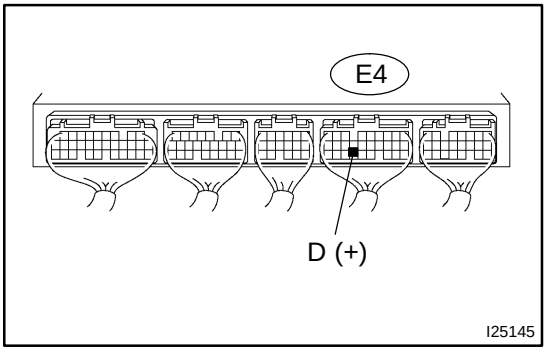

PREPARATION:

Turn the ignition switch ON.

CHECK:

Measure the voltage between terminal E4–25 (D) of the ECM connector and the body ground when shifting into the D position and the other positions.

OK:

Shift Position	Voltage
D position	10 – 14 V
Other positions	Below 1 V

OK	Proceed to next circuit inspection shown in problem symptoms table (See page DI–649).

NG

4	**Check harness and connector between ECM and park/neutral position switch (See page IN–27).**

NG → **Repair or replace harness or connector.**

OK

Check and replace ECM (See page IN–27).

DIA7V–01

CRUISE MAIN Indicator Light Circuit

CIRCUIT DESCRIPTION

When the cruise control main switch is turned ON, the CRUISE MAIN indicator light lights up.

WIRING DIAGRAM

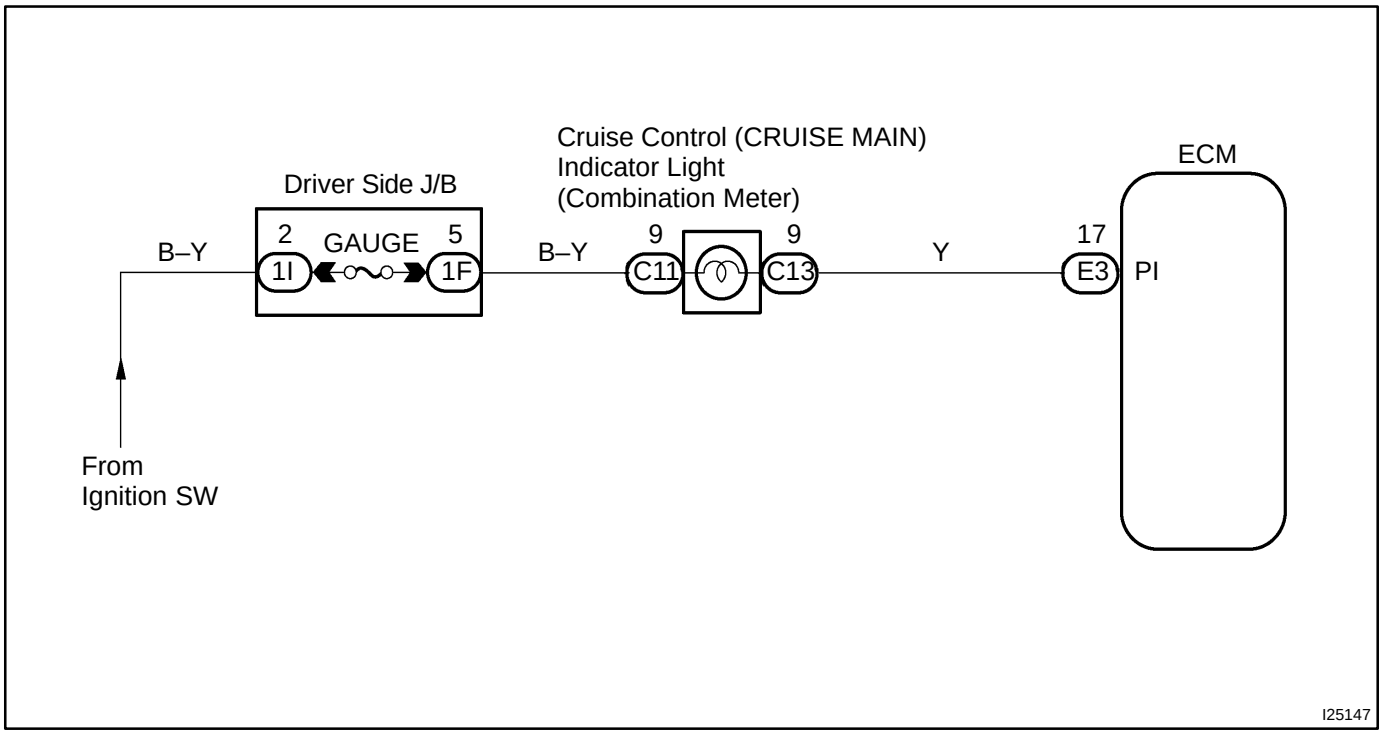

INSPECTION PROCEDURE

1	**Check voltage between terminal PI of ECM connector and body ground.**

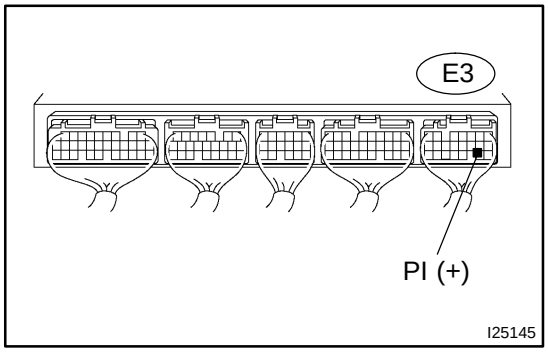

PREPARATION:
Turn the ignition switch ON.
CHECK:
Measure the voltage between terminal E3–17 (PI) of the ECU connector and the body ground, when the main switch is ON and OFF.
OK:

Switch Position	Voltage
OFF	10 – 16 V
ON	Below 1.2 V

OK → **Proceed to next circuit inspection shown in problem symptoms table (See page DI–649).**

NG

2	**Check combination meter (See page BE–2).**

NG → **Replace combination meter.**

OK

Check and replace ECM (See page IN–27).

DIA7W–01

Control Switch Circuit (Cruise Control Switch)

CIRCUIT DESCRIPTION

This circuit Sends the SET/COAST, RES/ACC and CANCEL signals (each voltage) to the ECM.

WIRING DIAGRAM

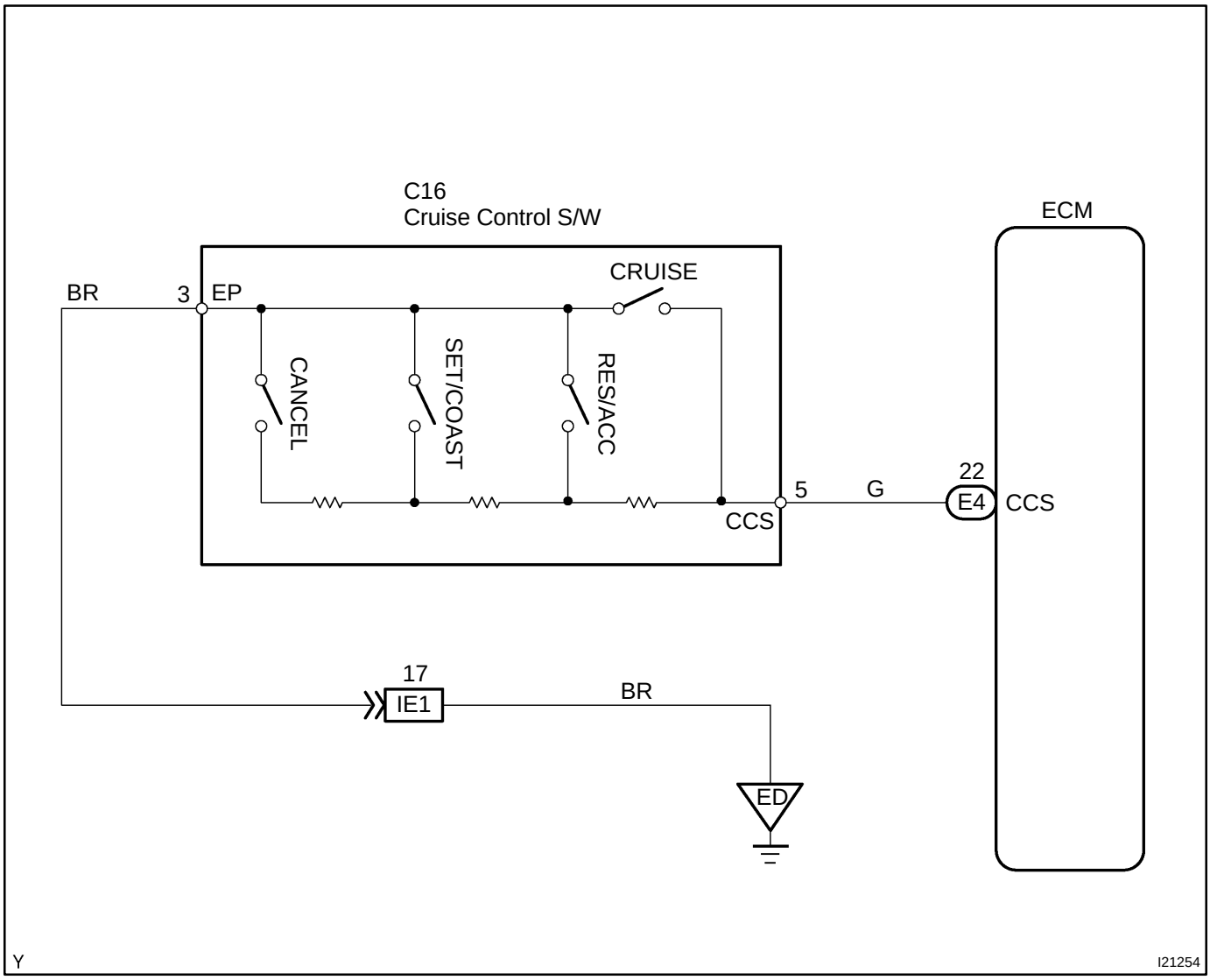

INSPECTION PROCEDURE

1	**Check voltage between terminal CCS of ECM connector and body ground.**

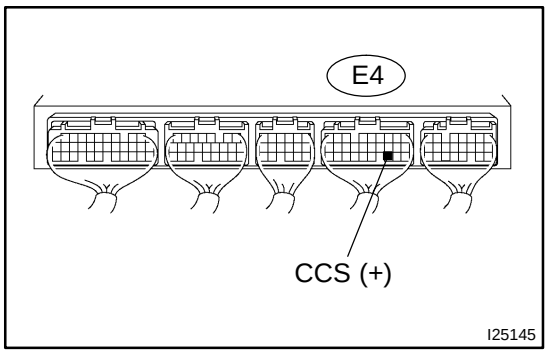

PREPARATION:

(a) Remove the ECM with the connector being connected.

(b) Turn the ignition switch ON.

CHECK:

Measure the voltage between terminals E4–22 (CCS) of the ECM connector and the body ground when each control switch is operated.

Switch position	Voltage
Neutral	9 – 14 V
+/RES	2.1 – 4.0 V
–/SET	4.0 – 7.1 V
CANCEL	6.0 – 10.1 V

NG → **Proceed to next circuit inspection shown in problem symptoms table (See page DI–649).**

OK

2	Check control switch.

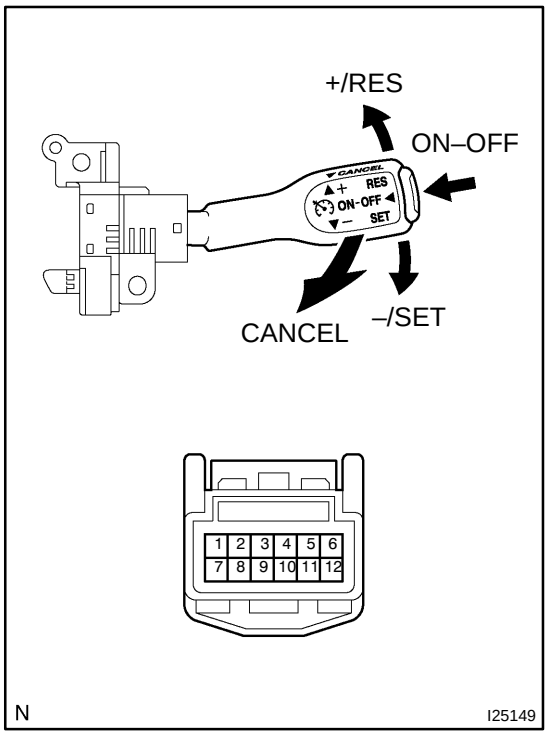

PREPARATION:

(a) Remove the steering wheel center pad.

(b) Disconnect the control switch connector.

CHECK:

(a) Measure the resistance between terminals 4 and 5 of the control switch connector when the control switch is operated.

OK:

Switch Position	Resistance
Neutral	∞ (No continuity)
+/RES	235 – 245 Ω
–/SET	617 – 643 Ω
CANCEL	1509 – 1571 Ω

(b) Check the continuity between terminals 4 and 5 of the control switch connector when the main switch is held on and off.

OK:

Switch Position	Tester connection	Specified condition
OFF	–	No continuity
ON	4 – 5	Continuity

NG → **Replace control switch.**

OK

3	Check harness and connector between ECM and cruise control switch, and cruise control switch and body ground (See page IN–27).

NG → **Repair or replace harness or connector.**

OK

4	Check CRUISE MAIN indicator light (See page DI–656).

NG → Replace combination meter.

OK →

Check and replace ECM (See page IN–27).

CRUISE CONTROL SYSTEM (2UZ–FE)

DI26R–30

HOW TO PROCEED WITH TROUBLESHOOTING

Troubleshoot in accordance with the procedure on the following pages.

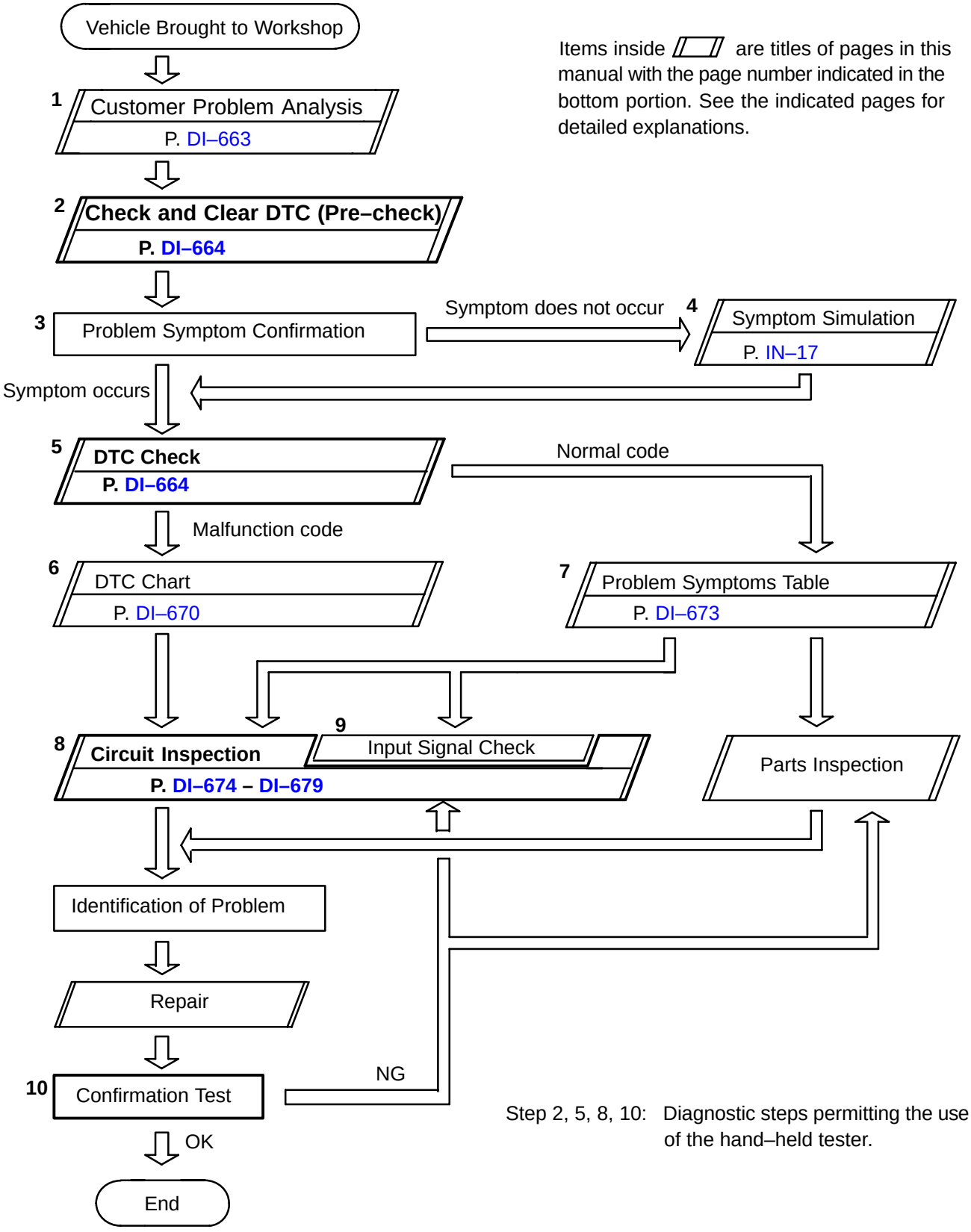

Items inside ▱ are titles of pages in this manual with the page number indicated in the bottom portion. See the indicated pages for detailed explanations.

Step 2, 5, 8, 10: Diagnostic steps permitting the use of the hand–held tester.

DI26S–19

CUSTOMER PROBLEM ANALYSIS CHECK

CRUISE CONTROL SYSTEM Check Sheet

Inspector's name: _____

Customer's Name		**Registration No.**	
		Registration Year	
		Frame No.	
Date of Vehicle Brought in	/ /	**Odometer Reading**	**km Mile**

Condition of Problem Occurrence	**Date of Problem Occurrence**	/ /
	How Often does Problem Occur?	☐ Continuous ☐ Intermittent (Times a day)
	Vehicle Speed when Problem Occurred	**km mile**

Symptoms	☐ Auto cancel occurs	◀Driving condition City driving Freeway Uphill Downhill ◀After cancel occurred, did the driver activate cruise control again? Yes No
	Cancel does not occur	With brake depressed Except D position shift At 40 km/h (25 mph) or less When control SW turns to CANCEL position
	Cruise control malfunction	Slip to acceleration side Slip to deceleration side Hunting occurs O/D cut off does not occur O/D does not return
	Switch malfunction	+ RES – SET CANCEL
	CRUISE MAIN indicator light	Remains ON Does not light up Blinking

DTC Check	**1st Time**	Normal Code Malfunction Code (Code)
	2nd Time	Normal Code Malfunction Code (Code)

DIA7L–01

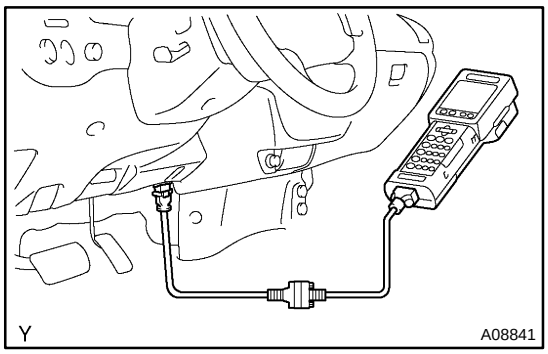

PRE–CHECK

1. DIAGNOSIS SYSTEM

(a) Description

The ECM controls the cruise control function on this vehicle. Data of the cruise control or DTC can be read from the DLC3 of the vehicle. When cruise control function has a trouble, check CRUISE MAIN indicator does not light up but DTC inspection is performed.

Therefore, when the cruise control function seems to have a trouble, use the hand–held tester or SST to check and troubleshoot it.

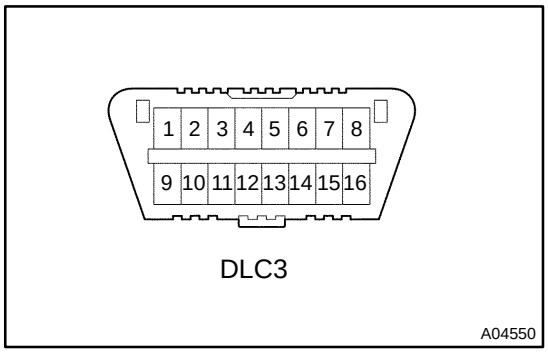

(b) Check the DLC3.

The vehicle's ECM uses the ISO 9141–2 for communication. The terminal arrangement of the DLC3 complies with the SAE J1962 and matches the ISO 9141–2 format.

Terminal No.	Connection/Specified Condition	Condition
7	Bus+ Line/Pulse generation	During transmission
4	Chassis Ground ↔ Body Ground/1 Ω or less	Always
16	Battery Positive ↔ Body Ground/9 – 14 V	Always

HINT:

If the display shows "UNABLE TO CONNECT TO VEHICLE" when you have connected the cable of the hand–held tester to the DLC3, turned the ignition switch ON and operated the hand–held tester, there is a problem on the vehicle side or tool side.

- If the communication is normal when the tool is connected to another vehicle, inspect the DLC3 on the original vehicle.
- If the communication is still impossible when the tool is connected to another vehicle, the problem is probably in the tool itself, so consult the Service Department listed in the tool's instruction manual.

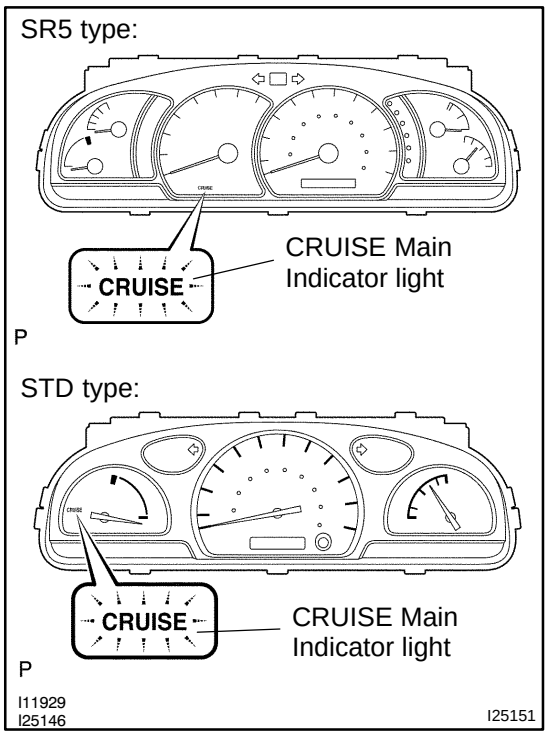

(c) Check the indicator.
(1) Turn the ignition switch ON.
(2) Check that the CRUISE MAIN indicator light comes on when the cruise control main switch is turned ON, and check that the indicator light goes off when the main switch is turned OFF.

HINT:
If the indicator check result is abnormal, proceed to troubleshooting (See page BE–2) of the combination meter section.

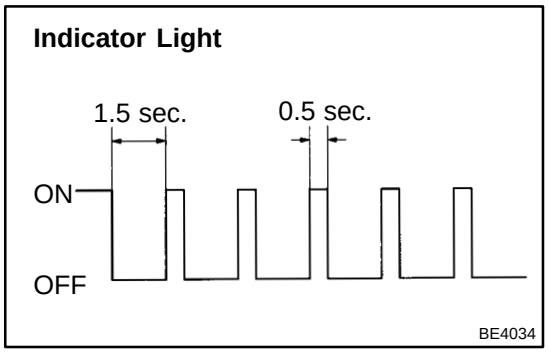

(d) Check the DTC.

HINT:
If a malfunction occurs in the speed sensor or actuator, etc. during cruise control driving, the ECU actuates AUTO CANCEL of the cruise control and turns ON and OFF the CRUISE MAIN indicator light to inform the driver of a malfunction. At the same time, the malfunction is stored in the memory as a DTC.

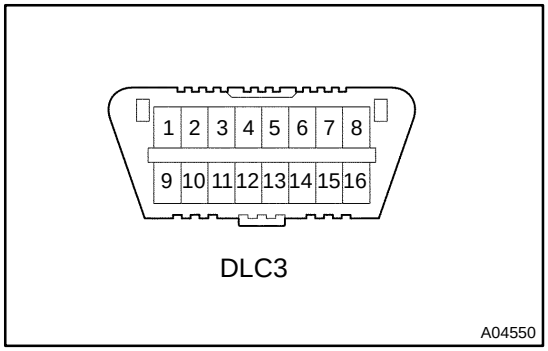

(e) Output a DTC using a diagnosis check wire.
(1) Turn the ignition switch ON.
(2) Using SST, connect terminals Tc and CG of the DLC3.
SST 09843–18020
(3) Read the DTC on the CRUISE MAIN indicator light.

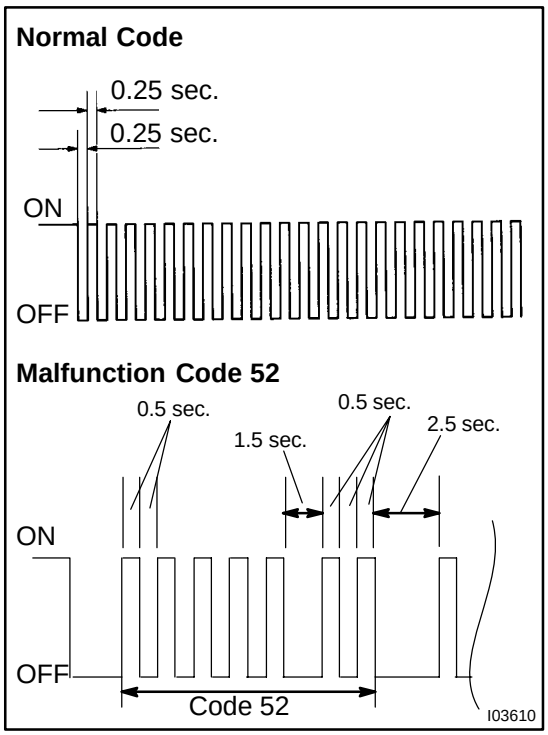

HINT:

- If a DTC is not output, inspect the diagnosis circuit.
- As an example, the blinking patterns of codes; normal and 52 are shown in the illustration.

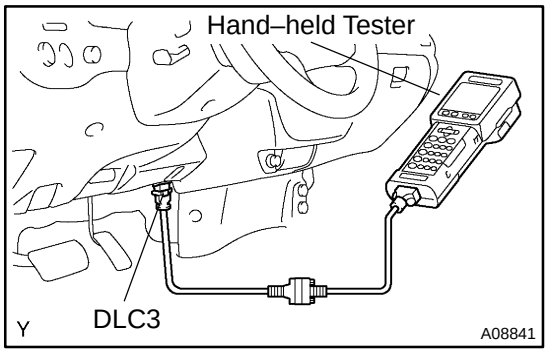

2. MONITOR ECM DATA BY USING HAND–HELD TESTER

(a) Connect the hand–held tester to the DLC3.
(b) Monitor the ECM data by following the prompts on the tester screen.

HINT:

The hand–held tester has a ”Snapshot” function which records the monitored data.

Please refer to the hand–held tester operator’s manual for further details.

3. DATA LIST

HINT:

According to the DATA LIST displayed by the hand–held tester, you can read the value of the switch, sensor, actuator and so on without parts removal. Reading the DATA LIST as a first step of troubleshooting is one of the method to shorten the labor time.

(a) Connect the hand–held to the DLC3.
(b) Turn the ignition switch ON.
(c) According to the display on the tester, read the ”DATA LIST”.

Item	Measurement Item / Display (Range)	Normal Condition	Diagnostic Note
VEHICLE SPD	Vehicle speed/min.: 0 km/h (0 mph), max.: 255 km/h (158 mph)	Actual vehicle speed	–
STP LIGHT SW	Stop light SW signal/ON or OFF	ON: Brake pedal depressed OFF: Brake pedal released	–

4. DTC CLEARANCE

(a) The following actions will erase DTCs and freeze frame data.
  (1) Hand–Held Tester:
  Operating the hand–held tester to erase codes.
  (2) Except Hand–Held Tester:
  Disconnecting the battery terminals or the EFI fuse for 10 seconds or more.

(b) After completing repairs, the DTC retained in the memory can be cleared by removing the EFI fuse for 10 seconds or more with the ignition switch OFF.

(c) Check that the normal code is displayed after connecting the fuse.

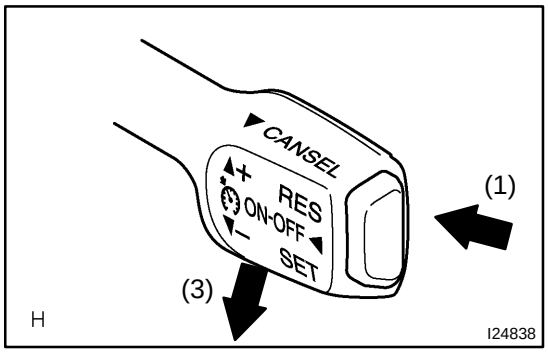

5. PROBLEM SYMPTOM CONFIRMATION (ROAD TEST)

(a) Inspect the SET switch.
  (1) Push the main switch ON.
  (2) Drive at the see speed (40 km/h (25 mph) or higher).
  (3) Press the control switch downward for the –/SET.
  (4) Release the switch, and check that the vehicle cruises at the set speed.

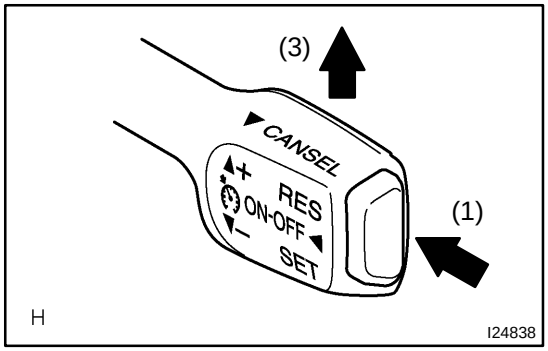

(b) Inspect the ACCEL switch.
  (1) Push the main switch ON.
  (2) Drive at the see speed (40 km/h (25 mph) or higher).
  (3) Check that the vehicle speed increases while the control switch is turned to +/RES, and that the vehicle cruises at the set speed when the switch is released.
  (4) Momentarily push the control switch upward in the +/RES direction and then immediately release it. Check that the vehicle speed increases by about 1.5 km/h (Tap–up function).

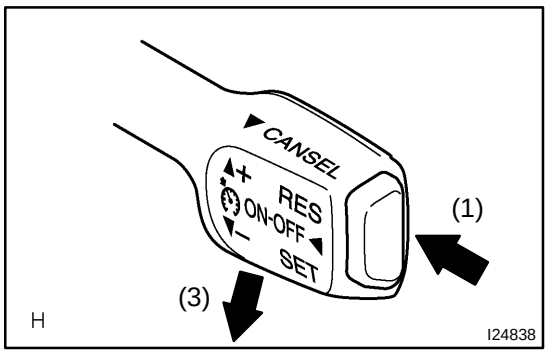

(c) Inspect the COAST switch.
(1) Push the main switch ON.
(2) Drive at the set speed (40 km/h (25 mph) or higher).
(3) Check that the vehicle speed decreases while the control switch is turned to –/SET, and the vehicle cruises at the set speed when the switch is released.
(4) Momentarily push the control switch downward for the –/SET, and then immediately release it. Check that the vehicle speed decreases by about 1.5 km/h (Tap–down function).

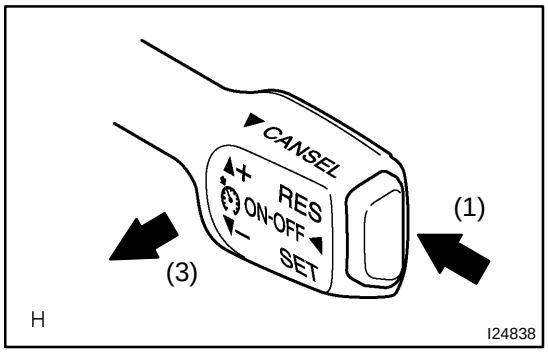

(d) Inspect the CANCEL switch.
(1) Push the main switch ON.
(2) Drive at the set speed (40 km/h (25 mph) or higher).
(3) When operating one of the followings, check that the cruise control system is cancelled and that the normal driving mode is reset.
▲ Depress the brake pedal.
▲ Shift into any positions except the D position.
▲ Push the main switch OFF.
▲ Pull the cruise control switch for CANCEL.

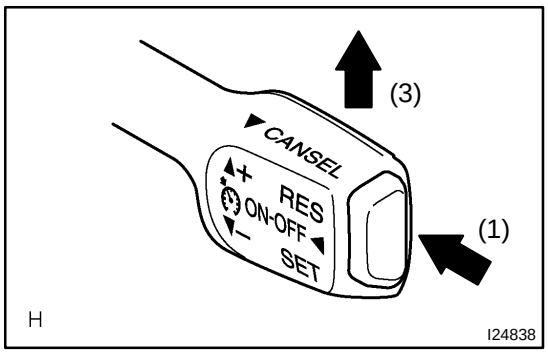

(e) Inspect the RESUME switch.
(1) Push the main switch ON.
(2) Drive at the set speed (40 km/h (25 mph) or higher).
(3) When operating one of the followings, check that the cruise control system is cancelled and that the normal driving mode is reset.
▲ Depress the brake pedal.
▲ Shift into any positions except the D position.
▲ Pull the cruise control switch for CANCEL.
(4) Turn the control switch to +/RES at the driving speed of more than 40 km/h (25 mph), and check that the vehicle restores the speed before the cancellation.

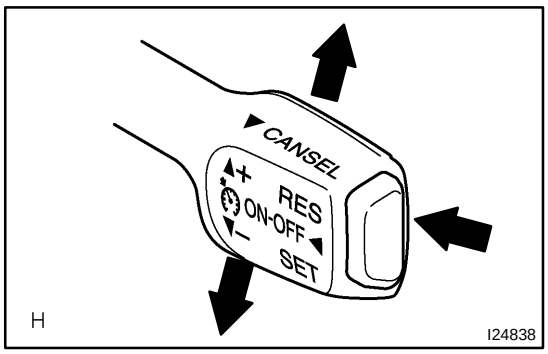

6. INPUT SIGNAL CHECK BY USING HAND–HELD TESTER

(a) Connect the hand–held tester to the DLC3.

(b) Check the control switches (ON–OFF, CANCEL, –/SET, +/RES).

DI26U–27

DIAGNOSTIC TROUBLE CODE CHART

If a malfunction code is displayed during the DTC check, check the circuit listed by code in the table below and proceed to the appropriate page.

DTC No. (See page)	Detection Item	Trouble Area
P0500/21 (DI–674)	Vehicle Speed Sensor ”A”	▲Combination meter ▲Open or short in vehicle speed sensor circuit ▲Vehicle speed sensor ▲ECM
P0503/23 (DI–674)	Vehicle Speed Sensor ”A” Intermittent/Erratic/High	▲Combination meter ▲Open or short in vehicle speed sensor circuit ▲Vehicle speed sensor ▲ECM
P0571/52 (DI–675)	Brake Switch ”A” Circuit	▲Short in stop light switch circuit ▲Stop light switch ▲ECM
P0607/54 (DI–676)	Control Module Performance	▲ECM

DI3CG–06

PARTS LOCATION

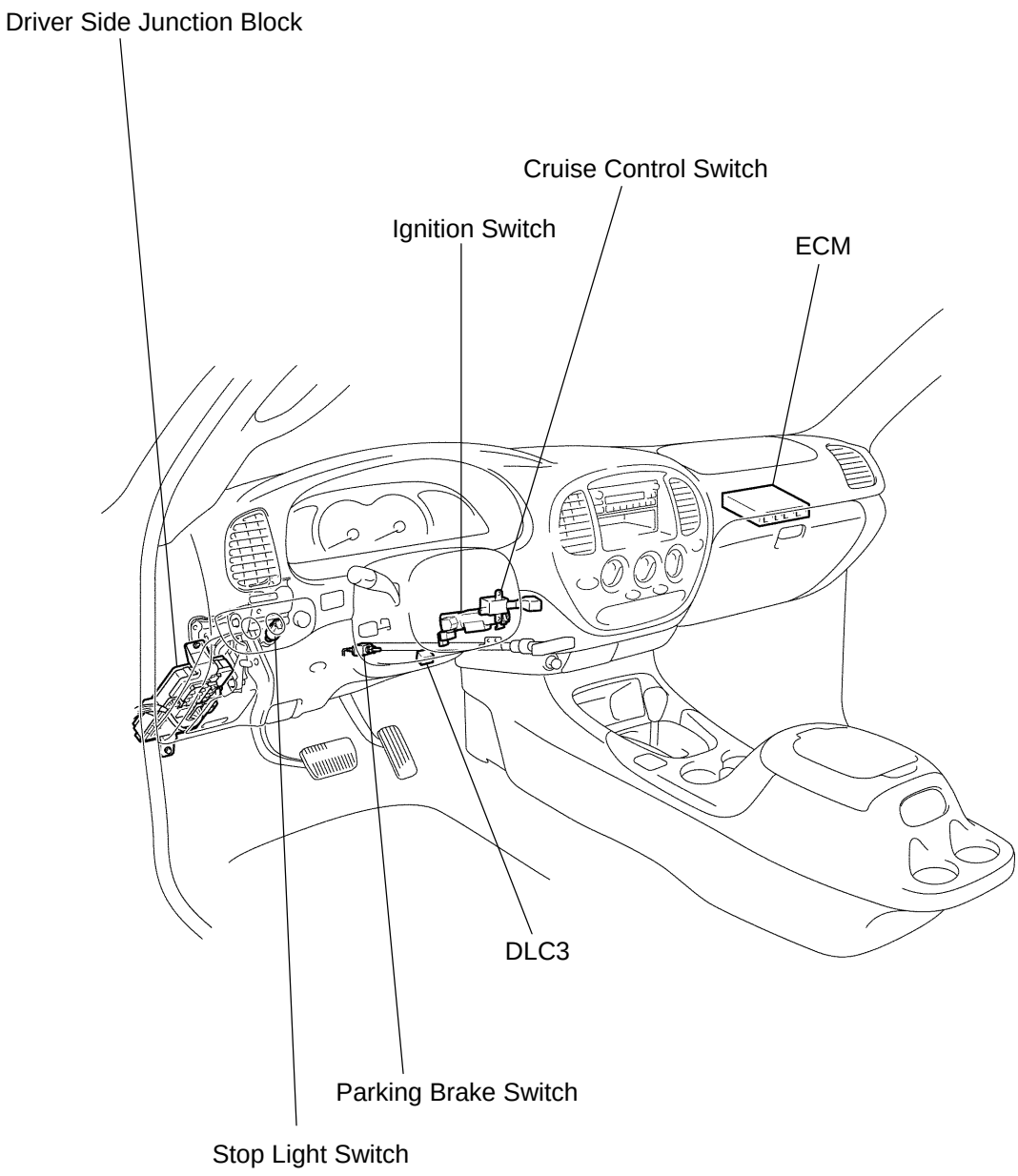

P

I25143

DI3CH–15

TERMINALS OF ECM

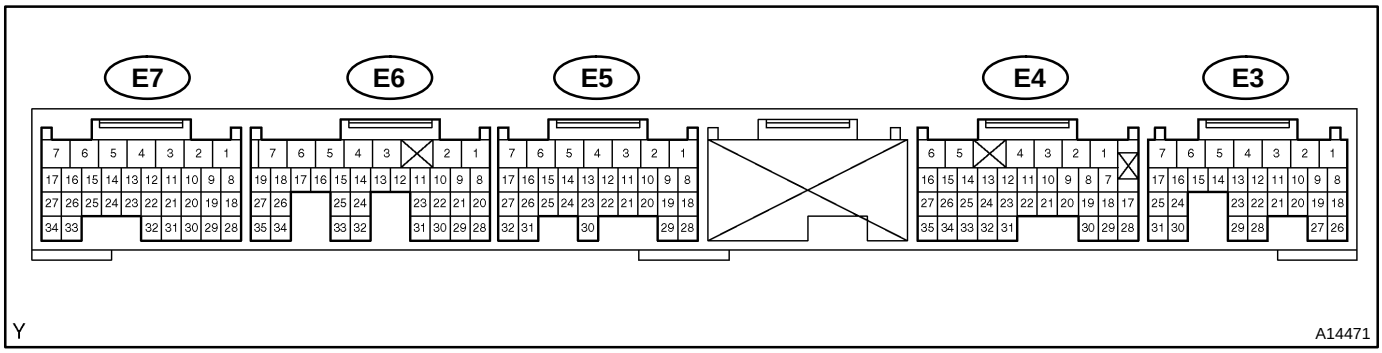

Symbols (Terminals No.)	Wiring Color	Condition	STD Voltage (V)
STP (E4–19) ↔ E1 (E5–1)	G–W ↔ BR	Brake pedal is depressed	7.5 – 14 V
		Brake pedal is released	0 – 1.5 V
CCS (E4–24) ↔ E1 (E5–1)	G ↔ BR	Ignition switch ON	9.0 – 14 V
		Ignition switch ON CANCEL switch held ON	6.0 – 10.1 V
		Ignition switch ON –/SET switch held ON	4.0 – 7.1 V
		Ignition switch ON +/RES switch held ON	2.1 – 4.0 V
		Ignition switch ON Main switch held ON	Below 1 V
PI (E4–13) ↔ E1 (E5–1)	B–R ↔ BR	Ignition switch ON Cruise control main switch ON	0 – 3.0 V
		Ignition switch ON Cruise control main switch OFF	9 – 14 V
ST1– (E4–12) ↔ E1 (E5–1)	L–B ↔ BR	Brake pedal is depressed	0 – 1.5 V
		Brake pedal is released	7.5 – 14 V

DI26X–30

PROBLEM SYMPTOMS TABLE

Symptom	Suspect Area	See page
SET does not occur or CANCEL occurs (DTC is Normal)	1. Vehicle Speed Sensor Circuit 2. Stop Light Switch Circuit 3. Park/Neutral Position Switch 4. ECM	DI–674 DI–675 DI–408 IN–27
SET does not occur or CANCEL occurs (DTC is not output)	ECM	IN–27
Actual vehicle speed deviates above or below the set speed	ECM	IN–27
Gear shifting occurs frequently between 3rd and O/D when driving on uphill road (Hunting)	ECM	IN–27
Cruise control can not be cancelled even when brake pedal is depressed	1. Stop Light Switch Circuit 2. ECM	DI–675 IN–27
Cruise control can not be cancelled even when transmission is shifted to ”N” position	1. Park/Neutral Position Switch 2. ECM	DI–408 IN–27
Cruise control can not be cancelled even when clutch pedal is depressed	ECM	IN–27
Control switch does not operate (–/SET, +/RES, CANCEL not possible)	ECM	IN–27
SET is possible at 40 km/h (25 mph) or less, or CANCEL does not operate at 40 km/h (25 mph) or less	ECM	IN–27
Poor response in ACCEL and RESUME modes	ECM	IN–27
O/D does not resume even though the road is not uphill	ECM	IN–27
DTC memory is erased	ECM	IN–27
DTC is not output, or is output when should not be	1. Diagnosis Circuit 2. ECM	– IN–27
”CRUISE MAIN” indicator light remains ON or fails to light up	ECM	IN–27
”CRUISE MAIN” indicator does not light up	CRUISE MAIN Indicator Light Circuit	DI–677

DIA7M–01

CIRCUIT INSPECTION

DTC	P0500/21	Vehicle Speed Sensor ”A”

DTC	P0503/23	Vehicle Speed Sensor ”A” Intermittent/Erratic/High

CIRCUIT DESCRIPTION

See page DI–334.

DTC No.	DTC Detection Condition	Trouble Area
P0500/42 P0503/23	No vehicle speed sensor signal to ECM under following conditions (a) and (b): (2 trip detection logic) (a) Park/neutral position switch is OFF (b) Vehicle is being driven	▲Combination meter ▲Open or short in vehicle speed sensor circuit ▲Vehicle speed sensor ▲ECM

WIRING DIAGRAM

See page DI–334.

INSPECTION PROCEDURE

See page DI–334.

DIA7N–01

DTC	P0571/52	Brake Switch ”A” Circuit

CIRCUIT DESCRIPTION

See page DI–346.

DTC No.	DTC Detection Condition	Trouble Area
P0571/52	Stop light switch does not turn off even once the vehicle is driven (2 trip detection logic)	▲Short in stop light switch signal circuit ▲Stop light switch ▲ECM

WIRING DIAGRAM

See page DI–346.

INSPECTION PROCEDURE

See page DI–346.

DIA7O–01

DTC	P0607/54	Control Module Performance

CIRCUIT DESCRIPTION

See page DI–347.

DTC No.	DTC Detecting Condition	Trouble Area
P0606/36 P0607/54	ECM malfunction	▲ECM

WIRING DIAGRAM

See page DI–347.

INSPECTION PROCEDURE

See page DI–347.

DIA7P–01

CRUISE MAIN Indicator Light Circuit

CIRCUIT DESCRIPTION

When the cruise control main switch is turned ON, the CRUISE MAIN indicator light lights up.

WIRING DIAGRAM

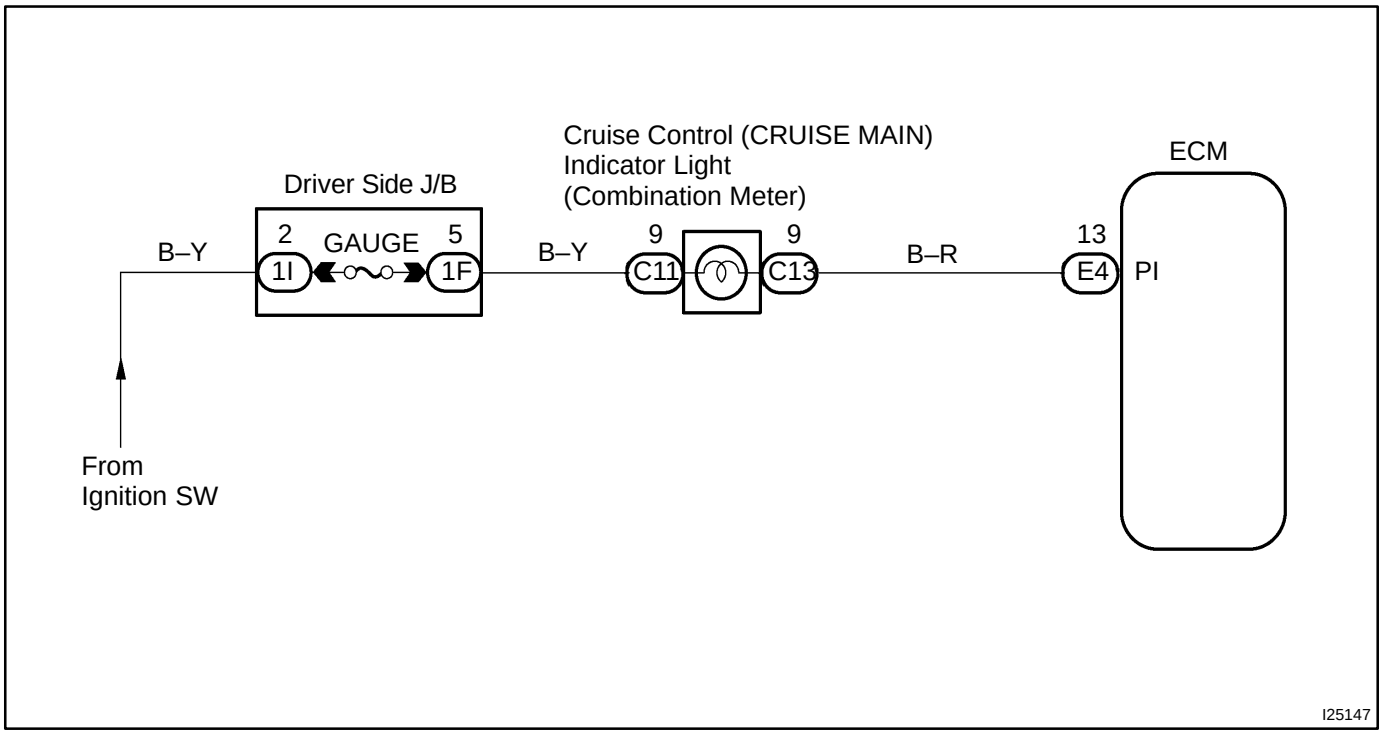

INSPECTION PROCEDURE

1	**Check voltage between terminal PI of ECM connector and body ground.**

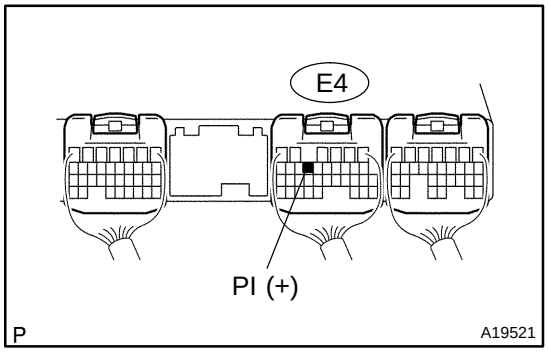

PREPARATION:
Turn the ignition switch ON.
CHECK:
Measure the voltage between terminal E4–13 (PI) of the ECU connector and the body ground, when the main switch is ON and OFF.
OK:

Switch Position	Voltage
OFF	9 – 14 V
ON	0 – 3 V

OK → **Proceed to next circuit inspection shown in problem symptoms table (See page DI–673).**

NG

2	**Check combination meter (See page BE–2).**

NG → **Replace combination meter.**

OK

Check and replace ECM (See page IN–27).

DIA7Q–01

Control Switch Circuit (Cruise Control Switch)

CIRCUIT DESCRIPTION

This circuit Sends the SET/COAST, RES/ACC and CANCEL signals (each voltage) to the ECM.

WIRING DIAGRAM

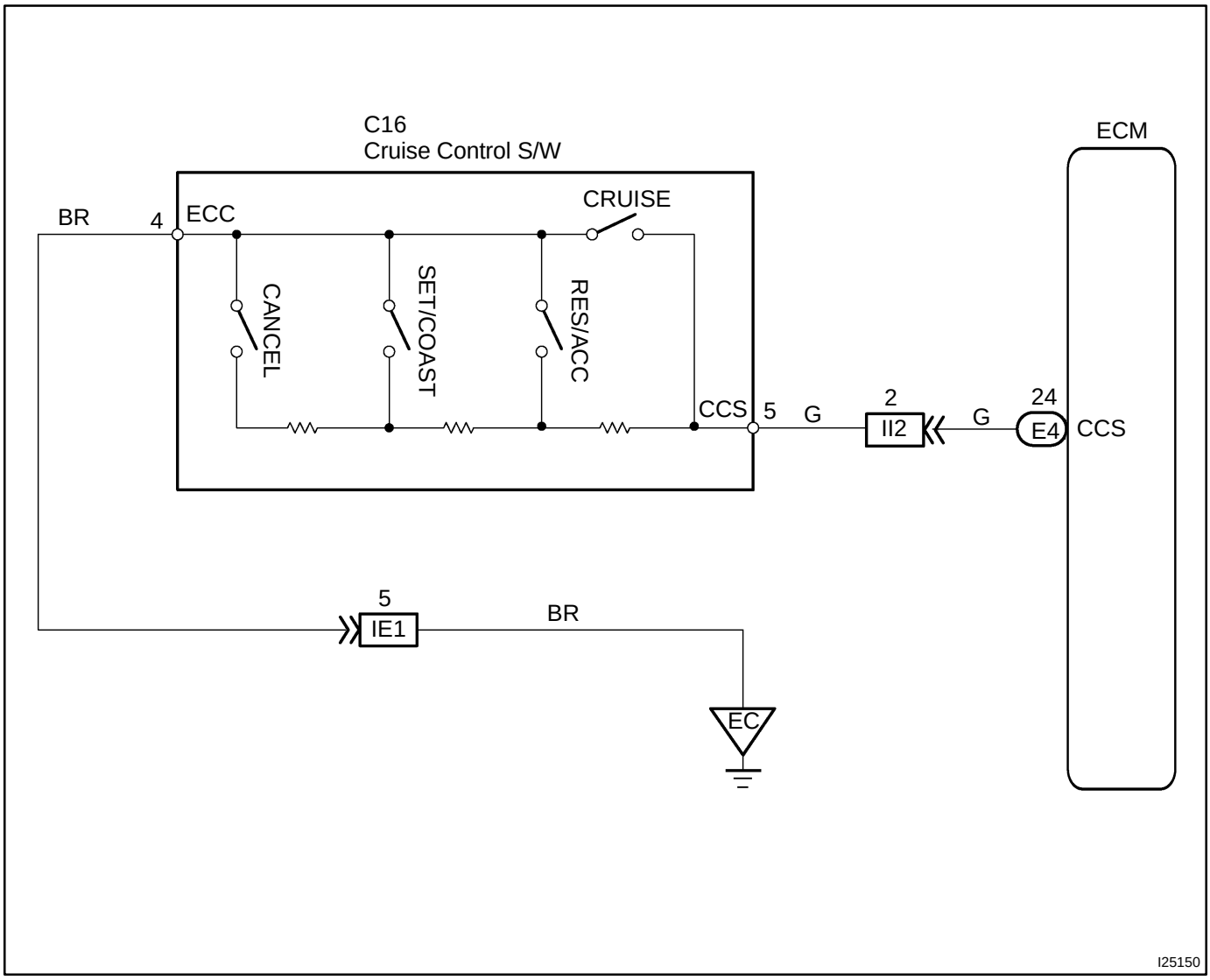

INSPECTION PROCEDURE

1	**Check voltage between terminal CCS of ECM connector and body ground.**

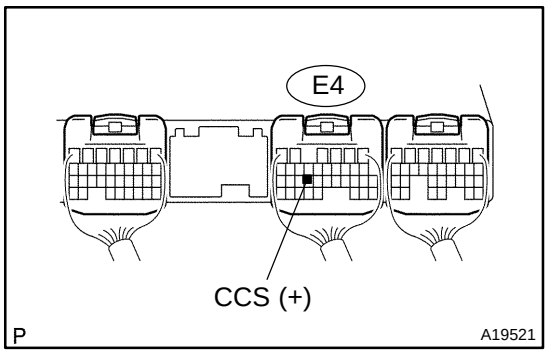

PREPARATION:

(a) Remove the ECM with the connector being connected.

(b) Turn the ignition switch ON.

CHECK:

Measure the voltage between terminals E4–24 (CCS) of the ECM connector and the body ground when each control switch is operated.

Switch position	Voltage
Neutral	9 – 14 V
+/RES	2.1 – 4.0 V
–/SET	4.0 – 7.1 V
CANCEL	6.0 – 10.1 V

NG → **Proceed to next circuit inspection shown in problem symptoms table (See page DI–673).**

OK

2	Check control switch.

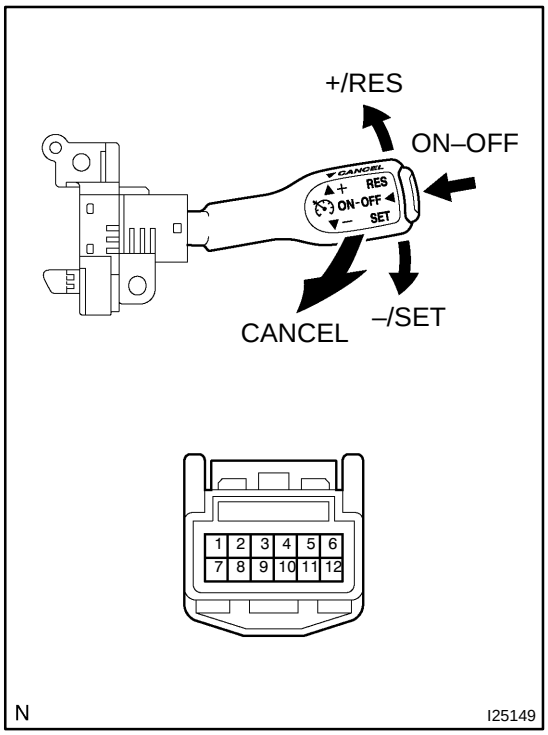

PREPARATION:

(a) Remove the steering wheel center pad.

(b) Disconnect the control switch connector.

CHECK:

(a) Measure the resistance between terminals 4 and 5 of the control switch connector when the control switch is operated.

OK:

Switch Position	Resistance
Neutral	∞ (No continuity)
+/RES	235 – 245 Ω
–/SET	617 – 643 Ω
CANCEL	1509 – 1571 Ω

(b) Check the continuity between terminals 4 and 5 of the control switch connector when the main switch is held on and off.

OK:

Switch Position	Tester connection	Specified condition
OFF	–	No continuity
ON	4 – 5	Continuity

NG → **Replace control switch.**

OK

3	Check harness and connector between ECM and cruise control switch, and cruise control switch and body ground (See page IN–27).

NG → **Repair or replace harness or connector.**

OK

4	Check CRUISE MAIN indicator light (See page DI–677).

NG → Replace combination meter.

OK →

Check and replace ECM (See page IN–27).

EMISSION CONTROL SYSTEM

EC07H–03

PURPOSE

The emission control systems are installed to reduce the amount of HC, CO and NOx exhausted from the engine (3 and 4), to prevent the atmospheric release of blow–by gas–containing HC (1) and evaporated fuel containing HC from being released from the fuel tank (2).
The function of each system is shown in the table:

System	Abbreviation	Function
3. Positive Crankcase Ventilation	PCV	Reduces HC
4. Evaporative Emission Control	EVAP	Reduces evaporated HC
5. Three–Way Catalytic Converter	TWC	Reduces HC, CO and NOx
6. Sequential Multiport Fuel Injection*	SFI	Injects a precisely timed, optimum amount of fuel for reduced exhaust emissions

Remark (*): For inspection and repair of the SFI system, refer to the SF section in this manual.

PARTS LAYOUT AND SCHEMATIC DRAWING

EC0IF–02

LOCATION

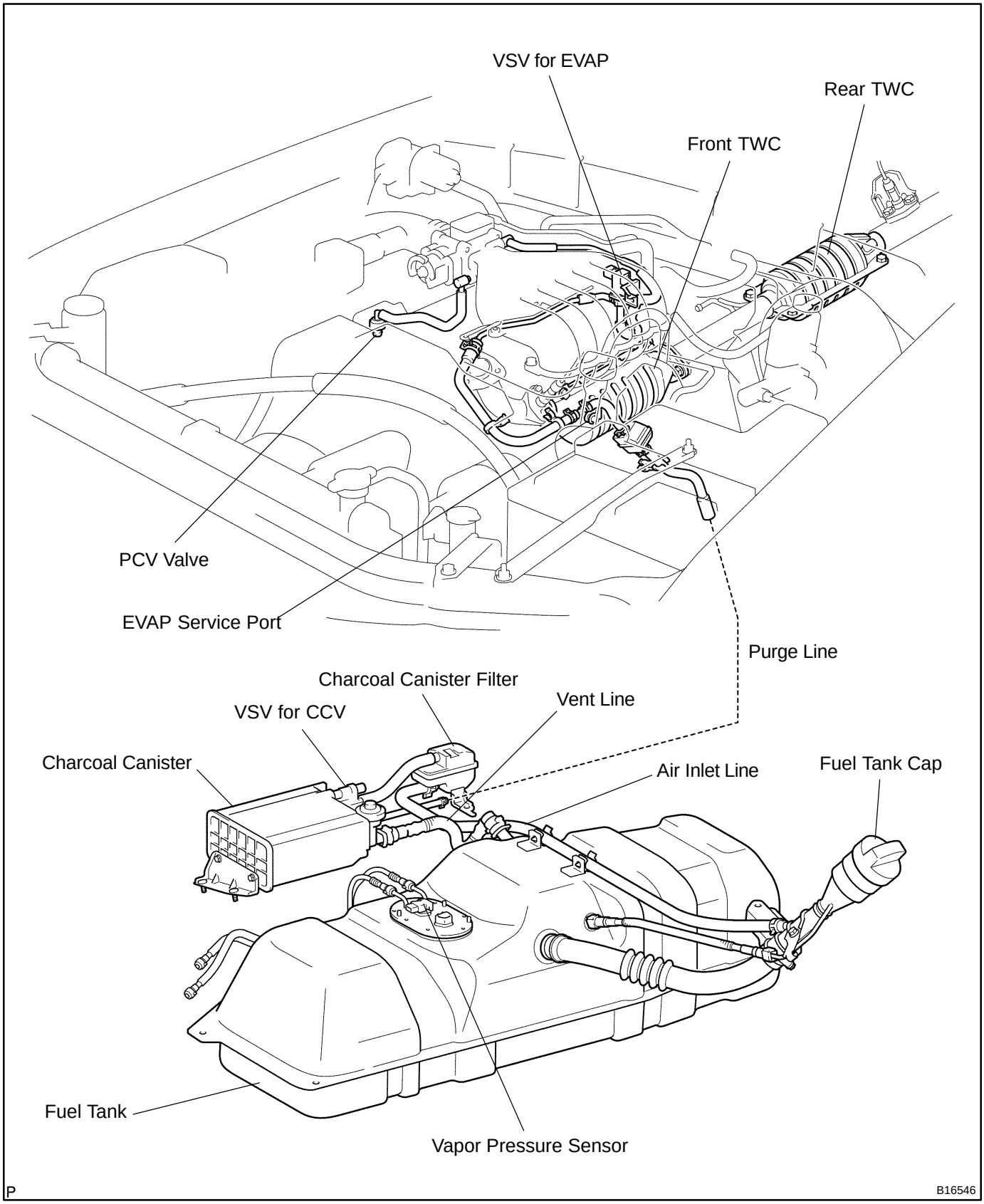

EC0IG–02

DRAWING

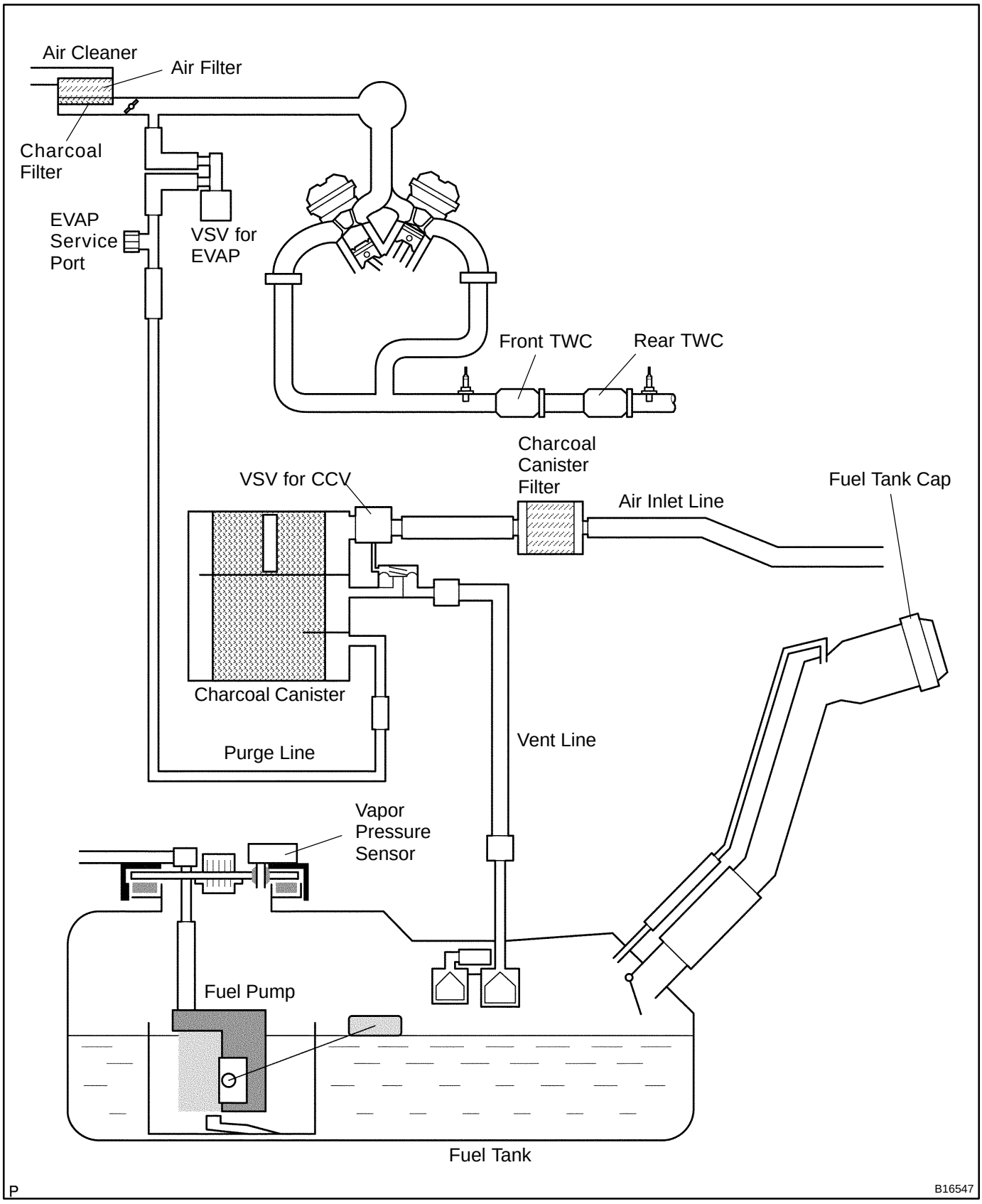

POSITIVE CRANKCASE VENTILATION (PCV) SYSTEM

EC035–02

INSPECTION

1. INSPECT PCV VALVE

(a) Remove the PCV valve.
  (1) Disconnect the PCV hose from the PCV valve.
  (2) Remove the PCV valve.

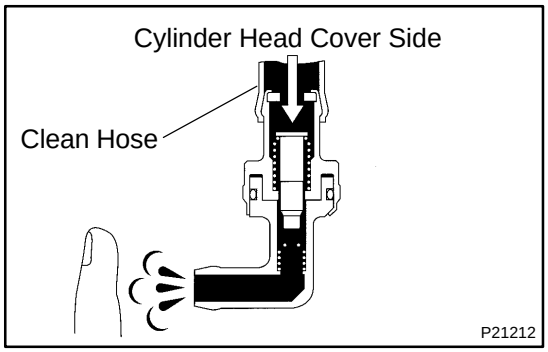

(b) Install a clean hose to the PCV valve.
(c) Inspect the PCV valve operation.
  (1) Blow air into the cylinder head cover side, and check that air passes through easily.

CAUTION:
Do not suck air through the valve. Petroleum substances inside the valve are harmful.

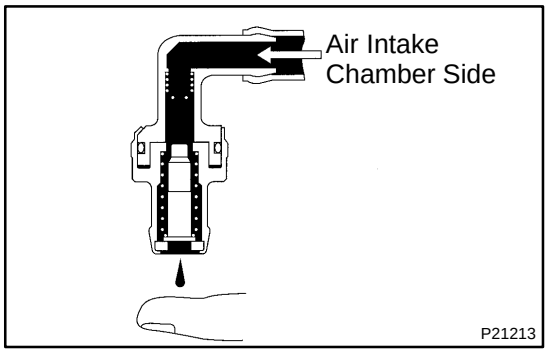

  (2) Blow air into the air intake chamber side, and check that air passes through with difficulty.

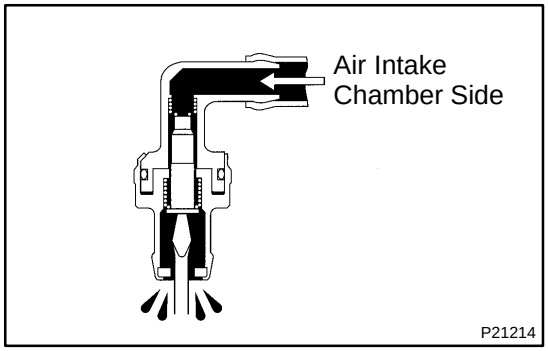

  (3) Blow air into the air intake chamber side when lift up the inside valve, and check that there is a strong resistance to air flow.

If operation is not as specified, replace the PCV valve.
(d) Remove the clean hose from the PCV valve.
(e) Reinstall the PCV valve.

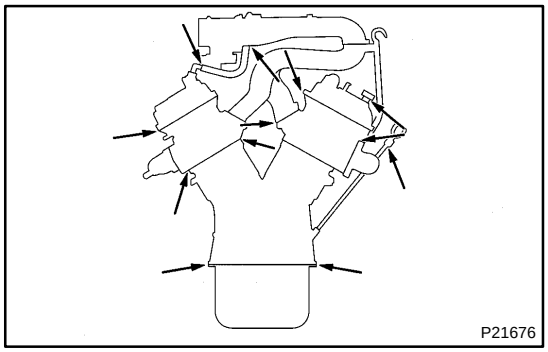

2. INSPECT HOSES, CONNECTIONS AND GASKETS

Visually check for cracks, leaks or damage.

EVAPORATIVE EMISSION (EVAP) CONTROL SYSTEM

COMPONENTS

EC0MA–01

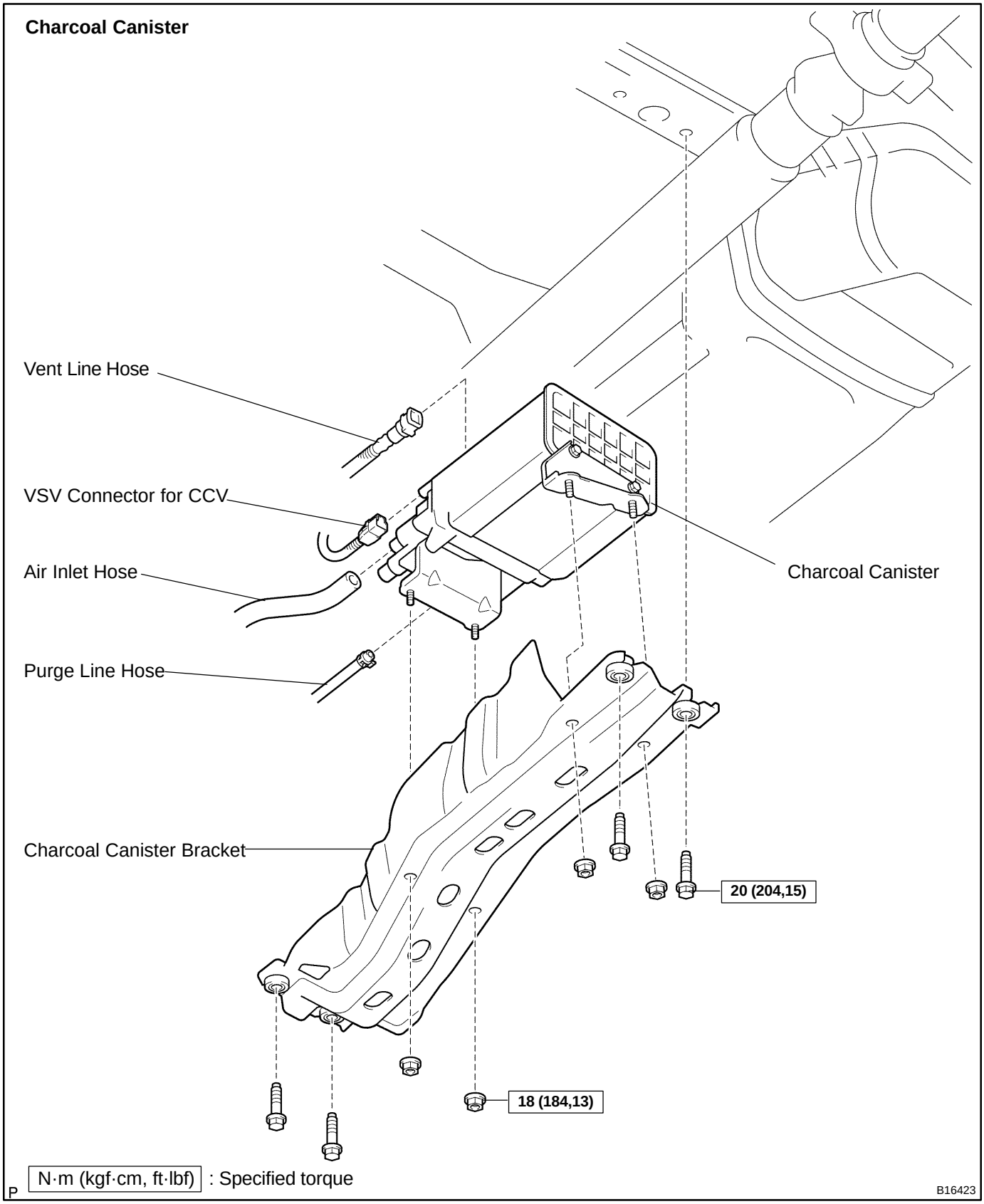

EC0MD–01

INSPECTION

1. INSPECT LINES AND CONNECTIONS

Visually check for loose connections, sharp bends or damage.

2. INSPECT FUEL TANK

Visually check for deformation, cracks or fuel leakage.

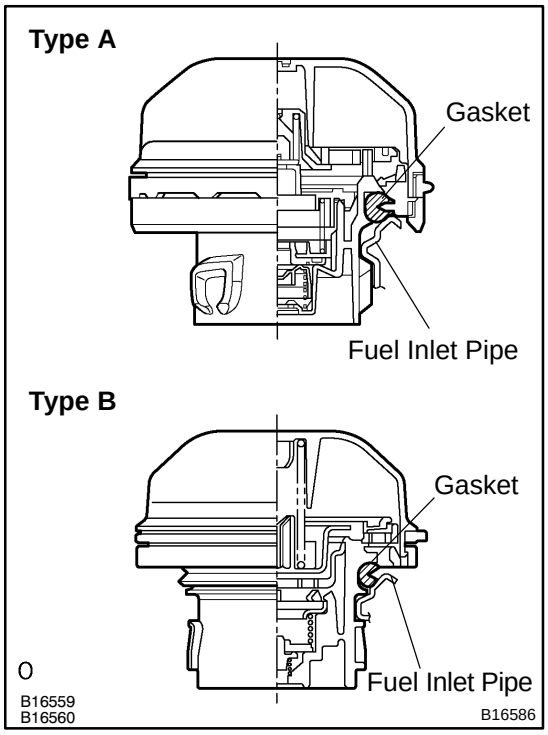

3. INSPECT FUEL TANK CAP

Visually check if the cap and/or gasket are deformed or damaged.

If necessary, repair or replace the cap.

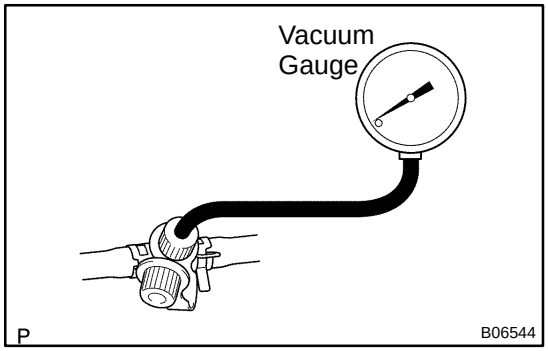

4. INSPECT EVAP SYSTEM LINE

(a) Warm up the engine and stop the engine.
Allow the engine to warm up to normal operating temperature.

(b) Install a vacuum gauge (EVAP control system test equipment vacuum gauge) to the EVAP service port on the purge line.

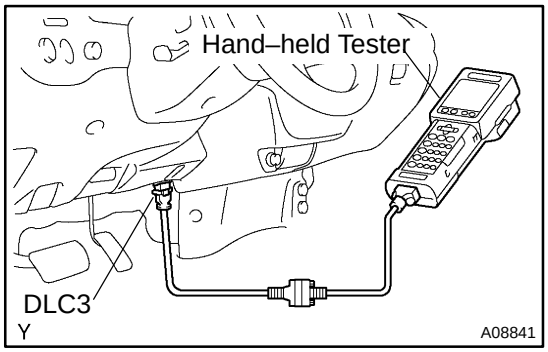

(c) Hand–held tester:
Forced driving of the VSV for the EVAP.
(1) Connect a hand–held tester to the DLC3.
(2) Start the engine.
(3) Push the hand–held tester main switch ON.
(4) Use the ACTIVE TEST mode on the hand–held tester to operate the VSV for the EVAP.

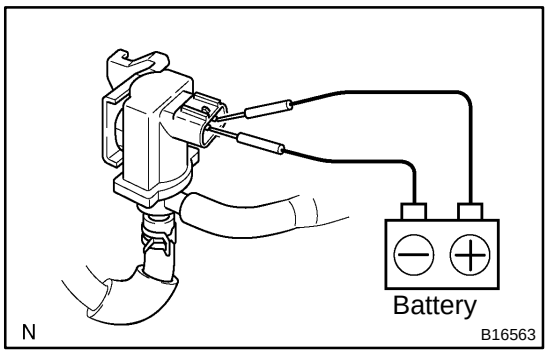

(d) If you have no hand–held tester:
Forced driving of the VSV for the EVAP.
(1) Disconnect the VSV connector for the EVAP.
(2) Connect the positive (+) and negative (–) leads from the battery to the VSV terminals for the EVAP.
(3) Start the engine.

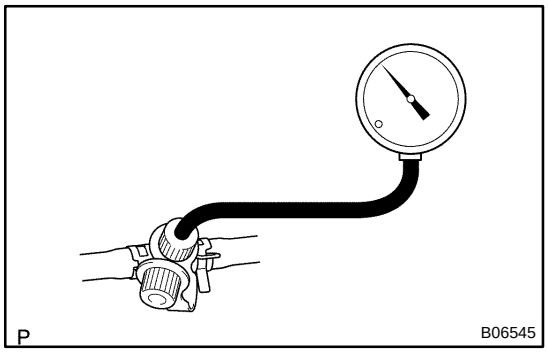

(e) Check the vacuum at idle.
Vacuum:
Maintain at 0.368 – 19.713 in.Hg (5 – 268 in.Aq) for over 5 seconds

HINT:
If the vacuum does not change, you can conclude that the hose connecting the VSV to the service port has come loose or is blocked, or the VSV is malfunctioning.

(f) If you have hand–held tester:
Conclude forced driving of the VSV for the EVAP.
(1) Stop the engine.
(2) Disconnect the hand–held tester from the DLC3.

(g) If you have no hand–held tester:
Conclude forced driving of the VSV for the EVAP.
(1) Stop the engine.
(2) Disconnect the positive (+) and negative (–) leads from the battery, and from the VSV terminals for the EVAP.
(3) Connect the VSV connector for the EVAP.

(h) Disconnect the vacuum gauge from the EVAP service port on the purge line.

(i) Connect a pressure gauge to the EVAP service port on the purge line.

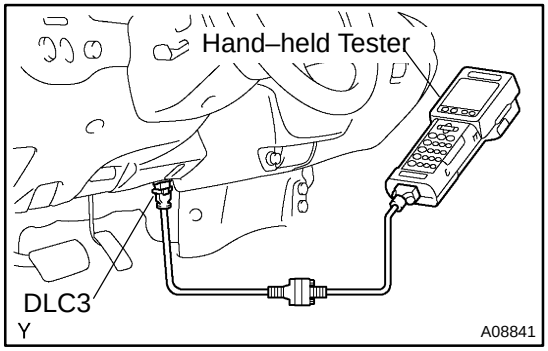

(j) If you have hand–held tester:
Force driving of the VSV for canister closed valve (CCV)
(1) Connect a hand–held tester to the DLC3.
(2) Turn the ignition switch ON.
(3) Push the hand–held tester main switch ON.
(4) Use the ACTIVE TEST mode on the hand–held tester to operate the VSV for CCV.

NOTICE:
Do not start the engine.

HINT:
If the check is not completed within 10 minutes, the forced close of VSV for the CCV will be reset.

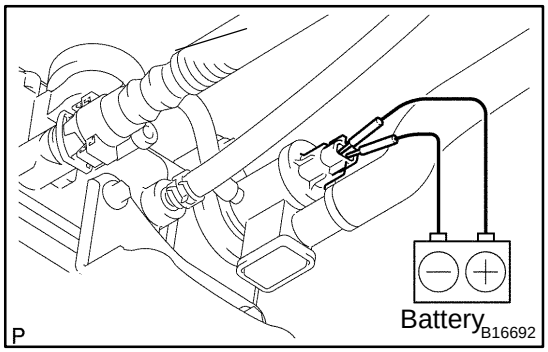

(k) If you have no hand–held tester:
Forced driving of the VSV for the CCV.
(1) Disconnect the VSV connector for the CCV.
(2) Connect the positive (+) and negative (–) leads from the battery to the VSV terminals for the CCV.

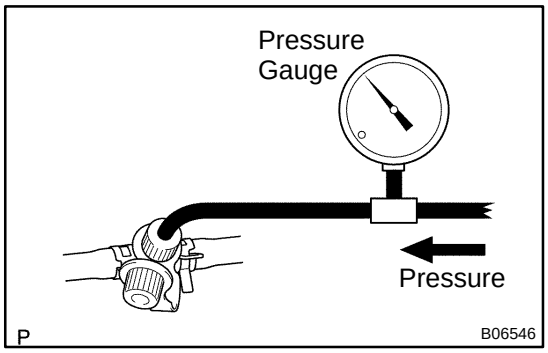

(l) Check the pressure.
(1) Add the pressure (13.5 – 15.5 in.Aq) from the EVAP service port.
Pressure:
2 minutes after the pressure is added, the gauge should be over 7.7 – 8.8 in.Aq.

HINT:
If you can't add pressure, you can conclude that the hose connecting the VSV for EVAP–canister–fuel tank has slipped off or the VSV is open.

(2) Check if the pressure decreases when the fuel tank cap is removed while adding pressure.

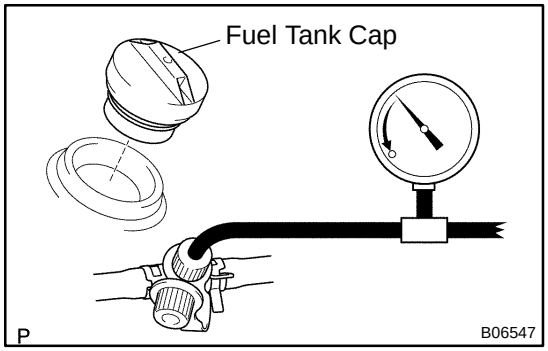

HINT:
If the pressure does not decrease when the filler cap is removed, then you can conclude that the hose connecting the service port to the fuel tank is blocked, etc.

(m) If you have hand–held tester:
Conclude forced driving of he VSV for the CCV.
(1) Turn ignition switch OFF.
(2) Disconnect the hand–held tester from the DLC3.

(n) If you have no hand–held tester:
Conclude forced driving of the VSV for the CCV.
(1) Disconnect the positive (+) and negative (–) leads from the battery, and from the VSV terminals for the CCV.
(2) Connect the VSV connector for the CCV.

(o) Disconnect the pressure gauge from the EVAP service port on the purge line.

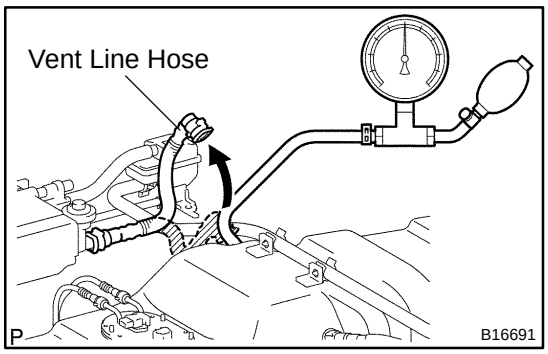

5. CHECK AIR TIGHTNESS IN FUEL TANK AND FILLER PIPE

(a) Disconnect the vent line hose from the fuel tank (See procedure in step 8).
(b) Apply pressure to fuel tank and make the internal pressure of the fuel tank 4 kPa (41 gf/cm^2, 0.58 psi).
(c) Check that the internal pressure of the fuel tank is maintained for 1 minute.
(d) Check the connected portions of each hose and pipe.
(e) Check the installed parts on the fuel tank.

If there is no abnormality, replace the fuel tank and filler pipe.

(f) Reconnect the vent line hose to the fuel tank.

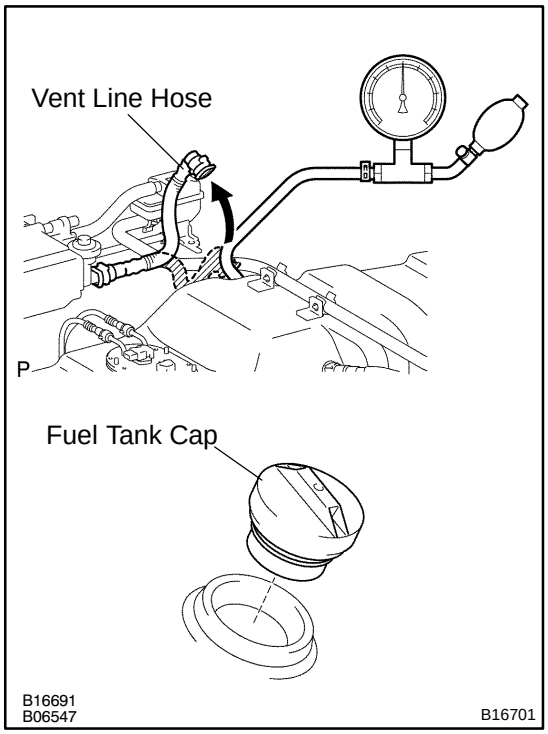

6. INSPECT FUEL CUT OFF VALVE AND FILL CHECK VALVE

(a) Disconnect the vent line hose from the fuel tank.
(b) Apply 4 kPa (41 gf/cm^2, 0.58 psi) to the vent port of the fuel tank.

HINT:

In the condition that the fuel is full, as the float valve of the fill check valve is closed and has no ventilation, it is necessary to check the fuel amount (volume).

(c) Remove the fuel tank cap, and check that pressure drops.

If pressure does not drop, replace the fuel tank assembly.

(d) Reconnect the vent line hose to the fuel tank.

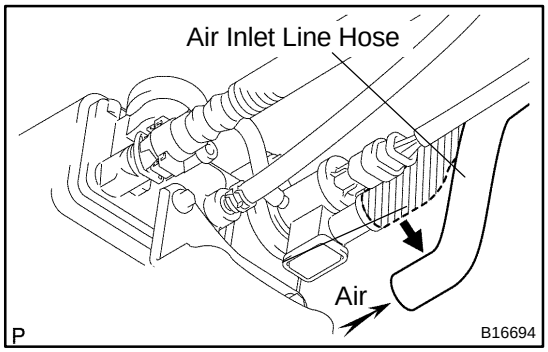

7. CHECK AIR INLET LINE

(a) Disconnect the air inlet line hose from the charcoal canister.
(b) Check that there is ventilation in the air inlet line.
(c) Reconnect the air inlet line hose to the charcoal canister.

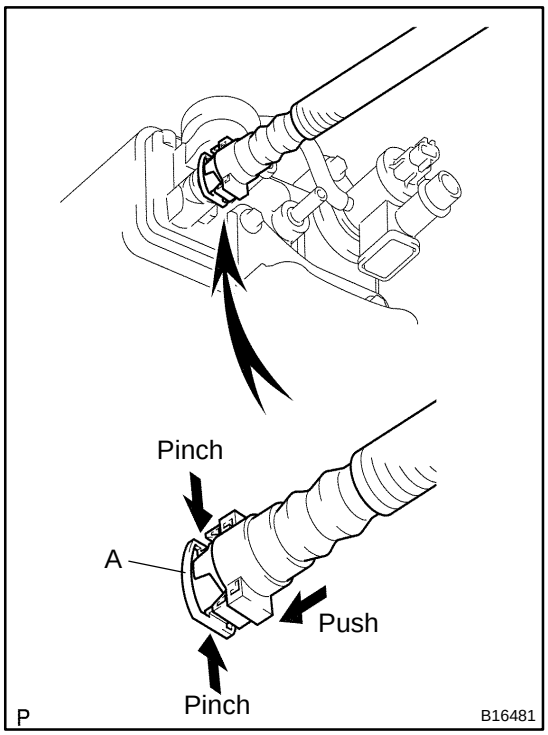

8. REMOVE CHARCOAL CANISTER ASSEMBLY

(a) Remove the 4 bolts, and disconnect the charcoal canister and bracket assembly from the body

(b) Remove the 4 nuts, and disconnect the charcoal canister from the bracket.

(c) Disconnect the VSV connector for the CCV.

(d) Disconnect the purge line hose and air inlet line hose from the charcoal canister.

(e) Disconnect the vent line hose from the charcoal canister.
  (1) Deeply push the connector inside.
  (2) Pinch portion A.
  (3) Pull out the connector.

(f) Remove the charcoal canister.

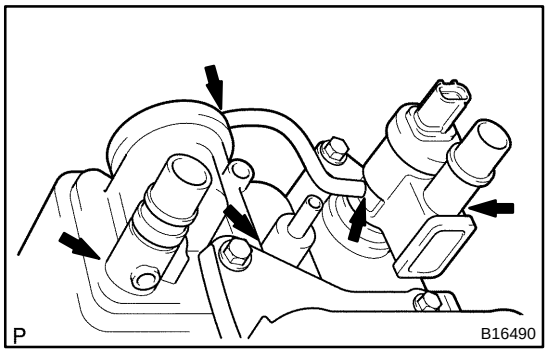

9. INSPECT CHARCOAL CANISTER

(a) Visually check the charcoal canister for cracks or damage.

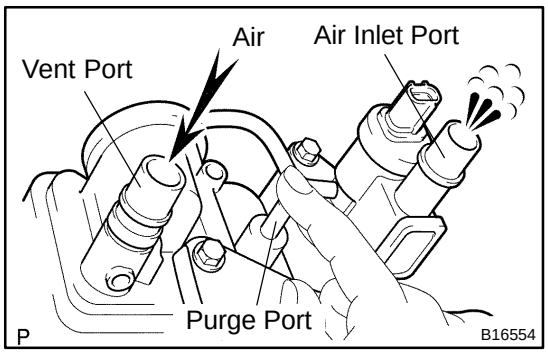

(b) Inspect the charcoal canister operation.
  (1) While holding the purge port closed, blow air (0.39 kPa, 4.0 gf/cm^2, 0.06 psi) into the vent port, and check that air flows out from the air inlet port.

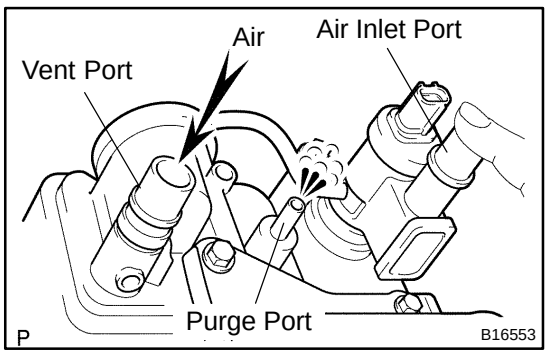

  (2) While holding the air inlet port closed, blow air (0.39 kPa, 4.0 gf/cm^2, 0.06 psi) into the vent port, and check that air flows out from the purge port.

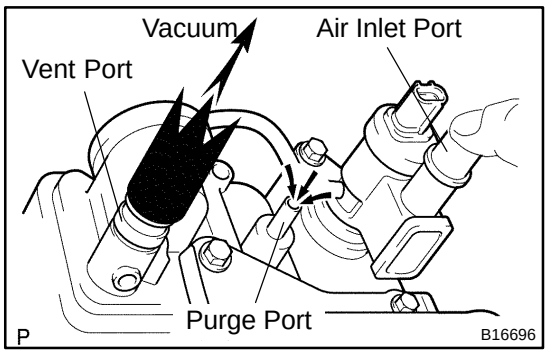

(3) While holding the air inlet port closed, apply vacuum (3.43 kPa, 25.7 gf/cm^2, 1.01 psi) to the vent port, and check that air is sucked in from the purge port.

If operation is not as specified, replace the charcoal canister.

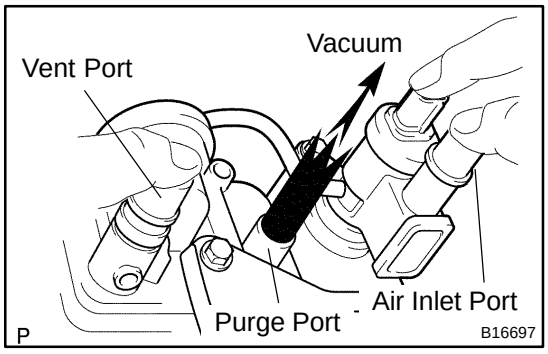

(c) Inspect the air tightness.

(1) While holding the vent and air inlet ports closed, apply vacuum (3.43 kPa, 25.7 gf/cm^2, 1.01 psi) to the purge port, and check that the vacuum is maintained for 1 minute.

HINT:

In order to maintain air tightness, the checked should be performed with the CCV terminal port held closed by hand.

If operation is not as specified, replace the charcoal canister.

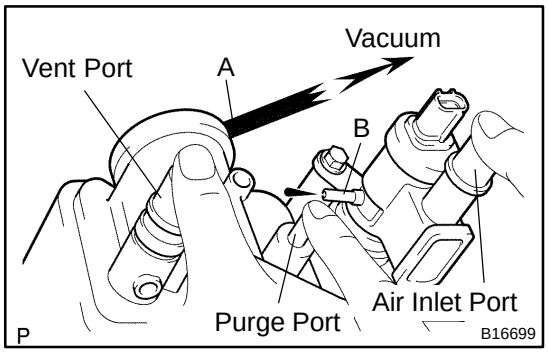

(d) Inspect the diaphragm.

(1) Remove the air hose between ports A and B.

(2) While holding the vent, purge and air inlet ports closed, apply vacuum (1.42 kPa, 11 mmHg, 0.42 in.Hg) into port A, and check that air is sucked in from port B.

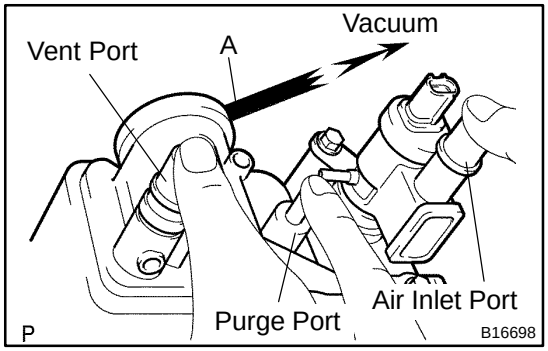

(3) While holding the vent, purge and air inlet ports closed, apply vacuum (1.42 kPa, 11 mmHg, 0.42 in.Hg) into port A, and measure how long it takes for vacuum to drop.

Vacuum drop time: 10 sec. or more

If operation is not as specified, replace the charcoal canister.

(4) Reinstall the air hose between ports A and B.

10. INSPECT CHARCOAL CANISTER FILTER (See page DI–102)

11. INSPECT VSV FOR CANISTER CLOSED VALVE (See page SF–37)

12. INSPECT VAPOR PRESSURE SENSOR (See page SF–41)

13. INSPECT VSV FOR EVAP (See page SF–34)

14. REINSTALL CHARCOAL CANISTER ASSEMBLY

THREE–WAY CATALYTIC CONVERTER (TWC) SYSTEM

EC0BB–02

ON–VEHICLE INSPECTION

1. INSPECT EXHAUST PIPE ASSEMBLY

(a) Check the connections for looseness or damage.

(b) Check the clamps for weakness, cracks or damage.

2. INSPECT TWC

Check for dents or damage.

If any part of the protector is damaged or dented to the extent that it contacts the TWC, repair or replace it.

3. INSPECT TWC HEAT INSULATOR

(a) Check the heat insulator for damage.

(b) Check for adequate clearance between the TWC and heat insulator.

EC0IH–01

COMPONENTS

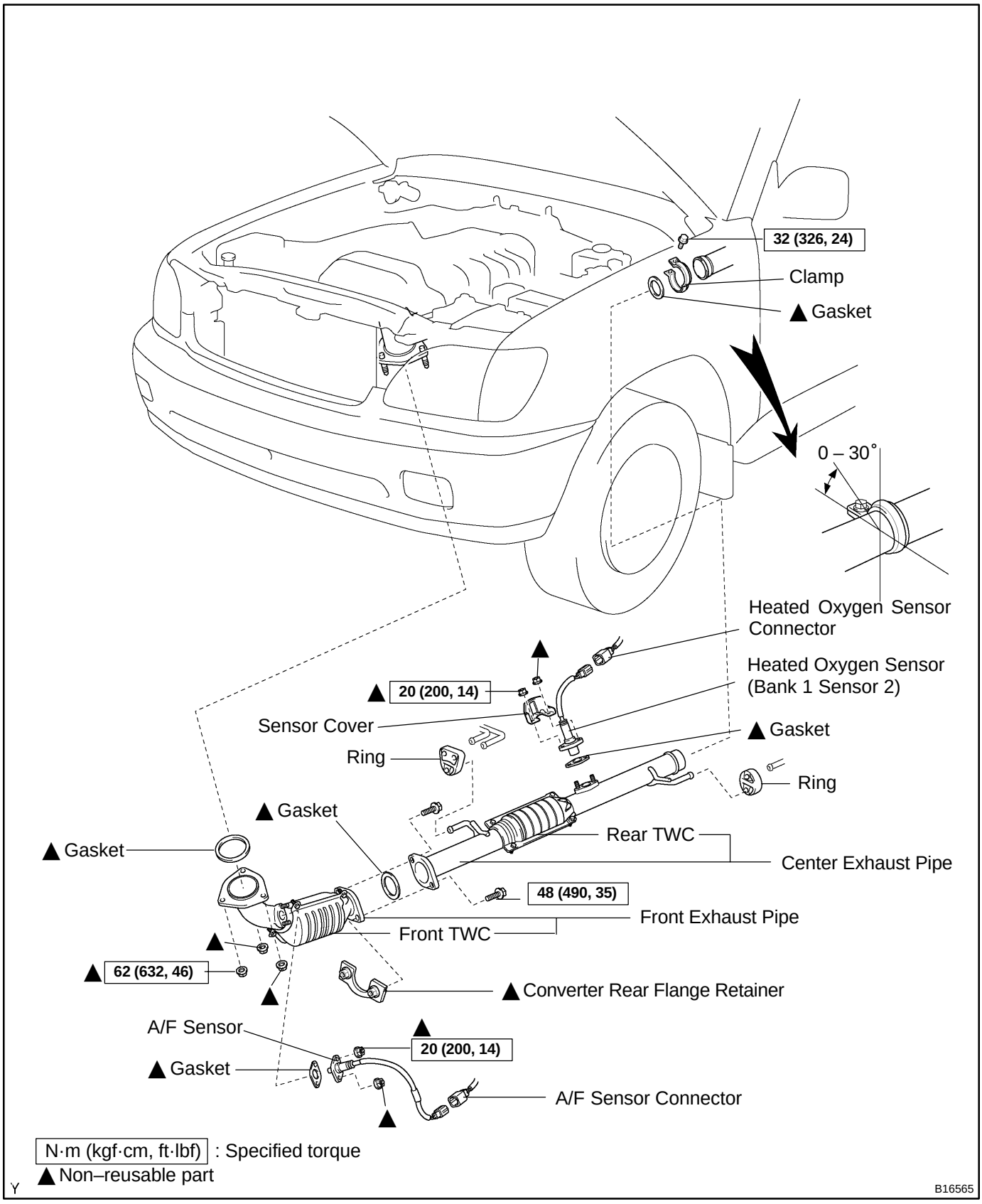

EMISSION CONTROL SYSTEM

EC07H–03

PURPOSE

The emission control systems are installed to reduce the amount of HC, CO and NOx exhausted from the engine (3 and 4), to prevent the atmospheric release of blow–by gas–containing HC (1) and evaporated fuel containing HC from being released from the fuel tank (2).
The function of each system is shown in the table:

System	Abbreviation	Function
7. Positive Crankcase Ventilation	PCV	Reduces HC
8. Evaporative Emission Control	EVAP	Reduces evaporated HC
9. Three–Way Catalytic Converter	TWC	Reduces HC, CO and NOx
10.Sequential Multiport Fuel Injection*	SFI	Injects a precisely timed, optimum amount of fuel for reduced exhaust emissions

Remark (*): For inspection and repair of the SFI system, refer to the SF section in this manual.

PARTS LAYOUT AND SCHEMATIC DRAWING

EC07I–08

LOCATION

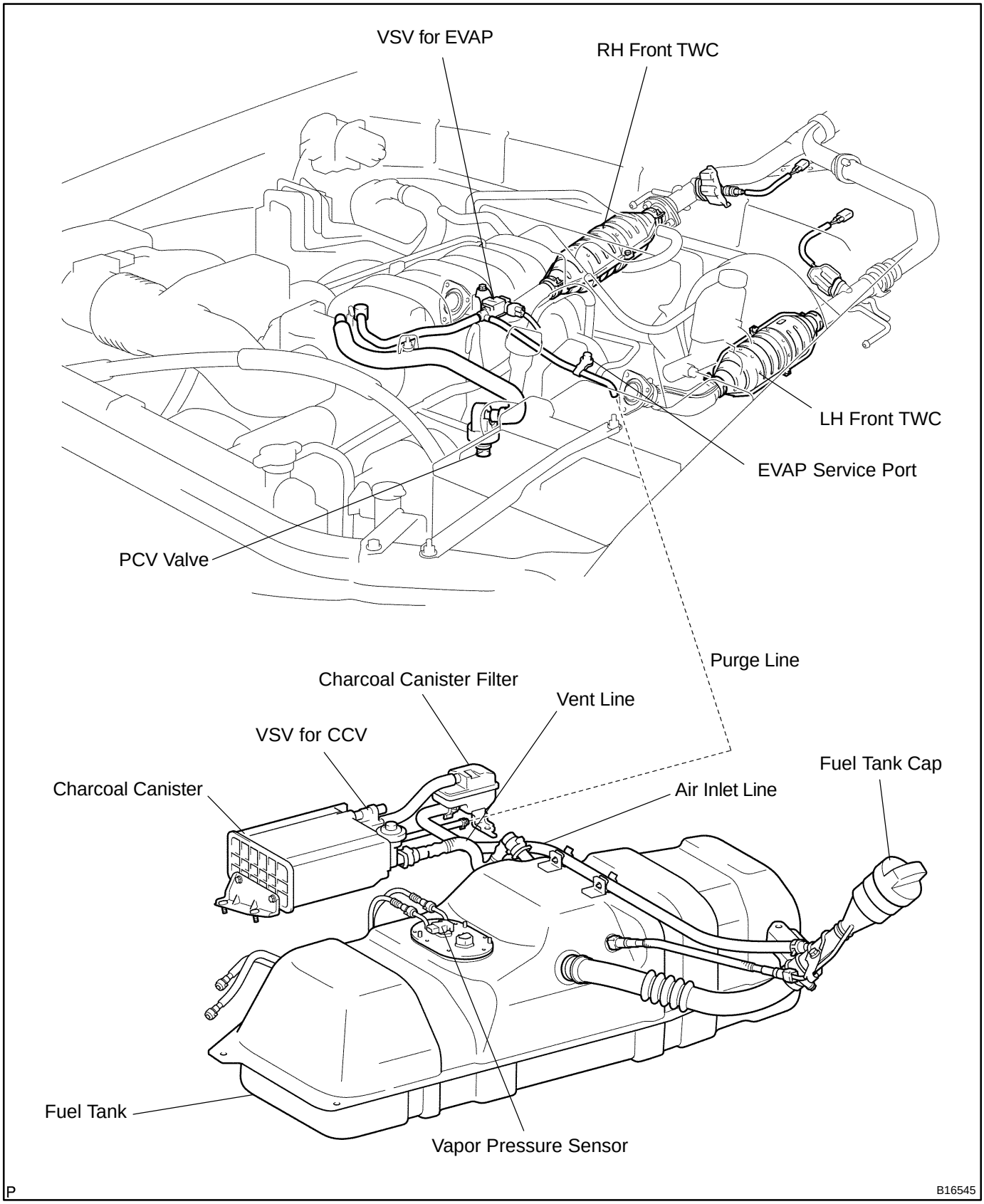

EC07J–07

DRAWING

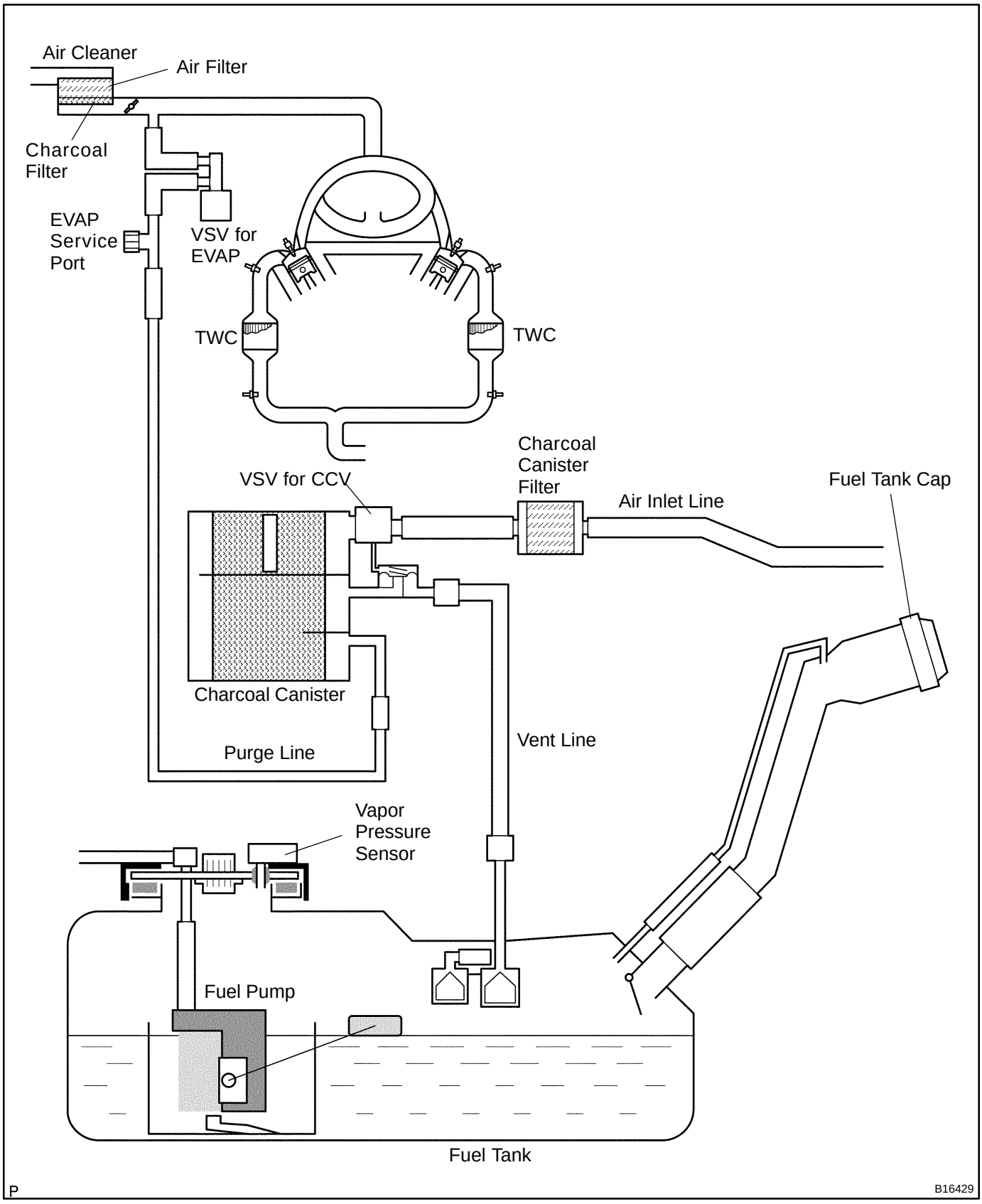

POSITIVE CRANKCASE VENTILATION (PCV) SYSTEM

EC0MB–01

COMPONENTS

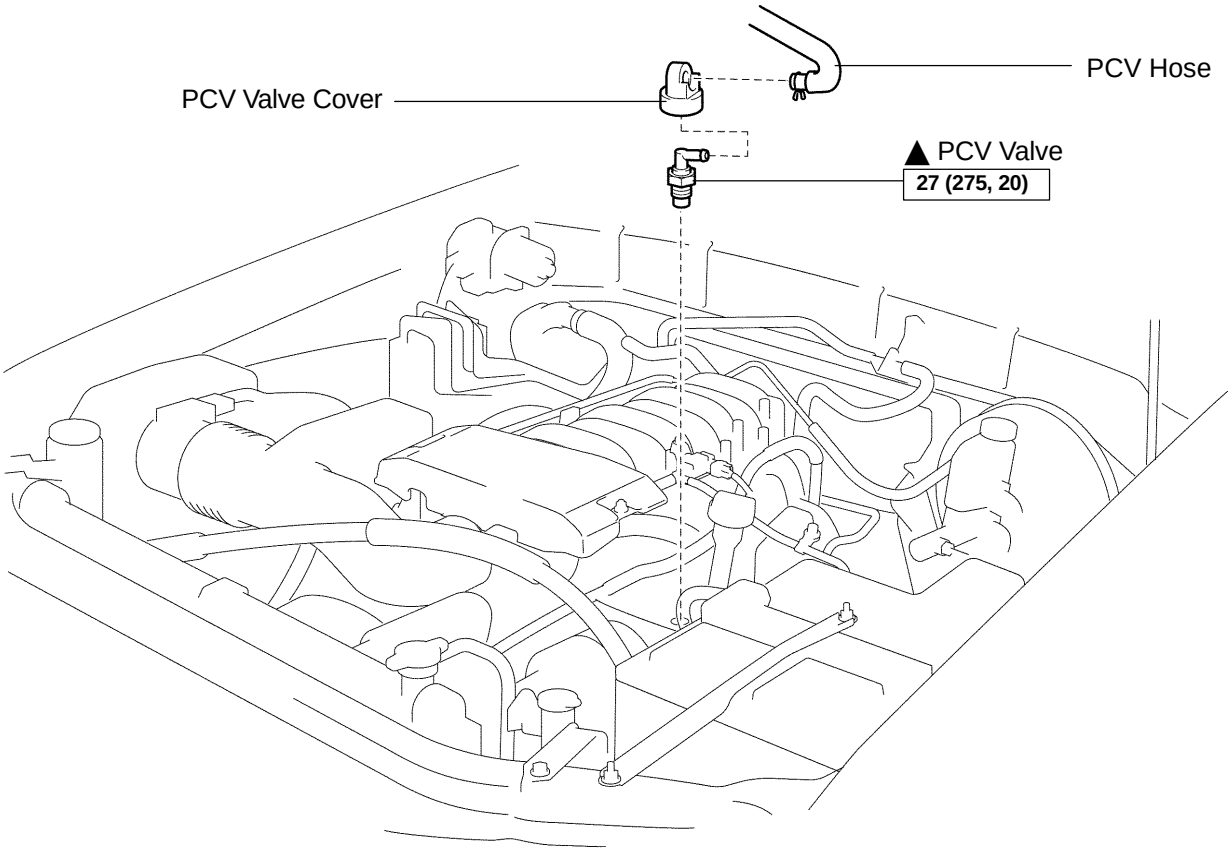

N·m (kgf·cm, ft·lbf) : Specified torque

P ▲ Precoated part

B16483

EC0MC–01

INSPECTION

1. REMOVE THROTTLE BODY COVER

2. INSPECT PCV VALVE

(a) Remove the PCV valve.

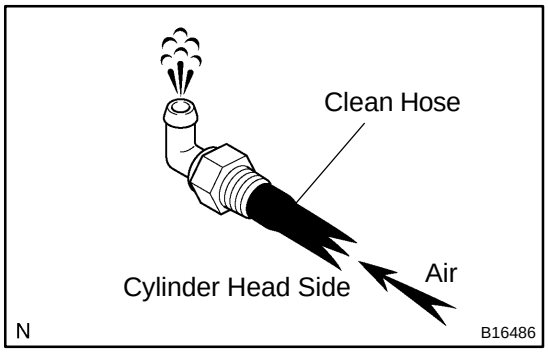

(b) Install a clean hose to the PCV valve.

(c) Inspect the PCV valve operation.

(1) Blow air into the cylinder head side, and check that air passes through easily.

CAUTION:

Do not suck air through the valve. Petroleum substances inside the valve are harmful.

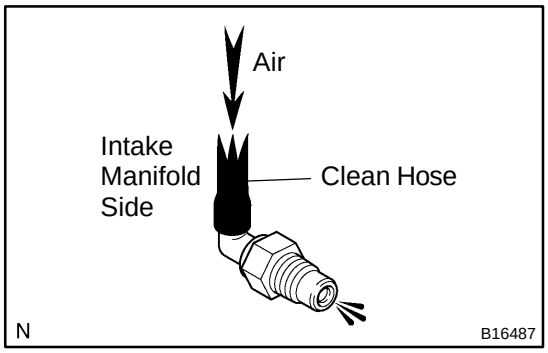

(2) Blow air into the intake manifold side, and check that air passes through with difficulty.

If operation is not as specified, replace the PCV valve.

(d) Remove the clean hose from the PCV valve.

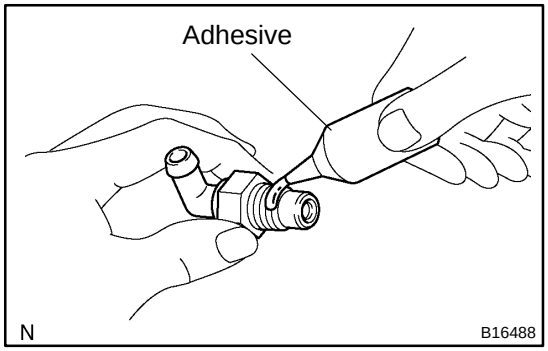

(e) Reinstall the PCV valve.

(1) Apply adhesive to 2 or 3 threads.

Adhesive:

Part No. 08833–00070, THREE BOND 1324 or equivalent

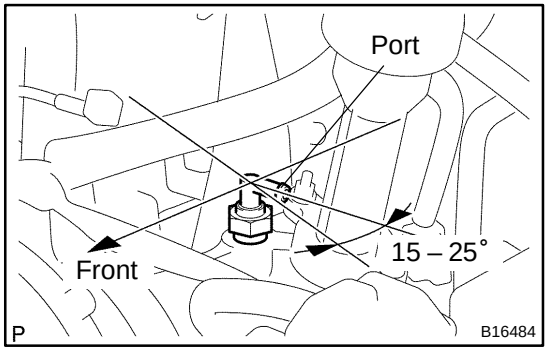

(2) Reinstall the PCV valve.

Torque: 27 N·m (275 kgf·cm, 20 ft·lbf)

HINT:

After applying the specified torque, rotate the PCV valve clockwise with the port faced in the direction indicated in the illustration

(3) Install the PCV valve cover to the PCV valve.

(4) Connect the PCV hose to the PCV valve.

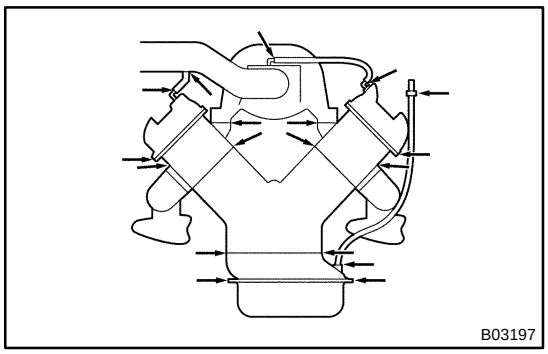

3. INSPECT HOSES, CONNECTIONS AND GASKETS

Visually check for cracks, leaks or damage.

4. REINSTALL THROTTLE BODY COVER

EVAPORATIVE EMISSION (EVAP) CONTROL SYSTEM

COMPONENTS

EC0MA–01

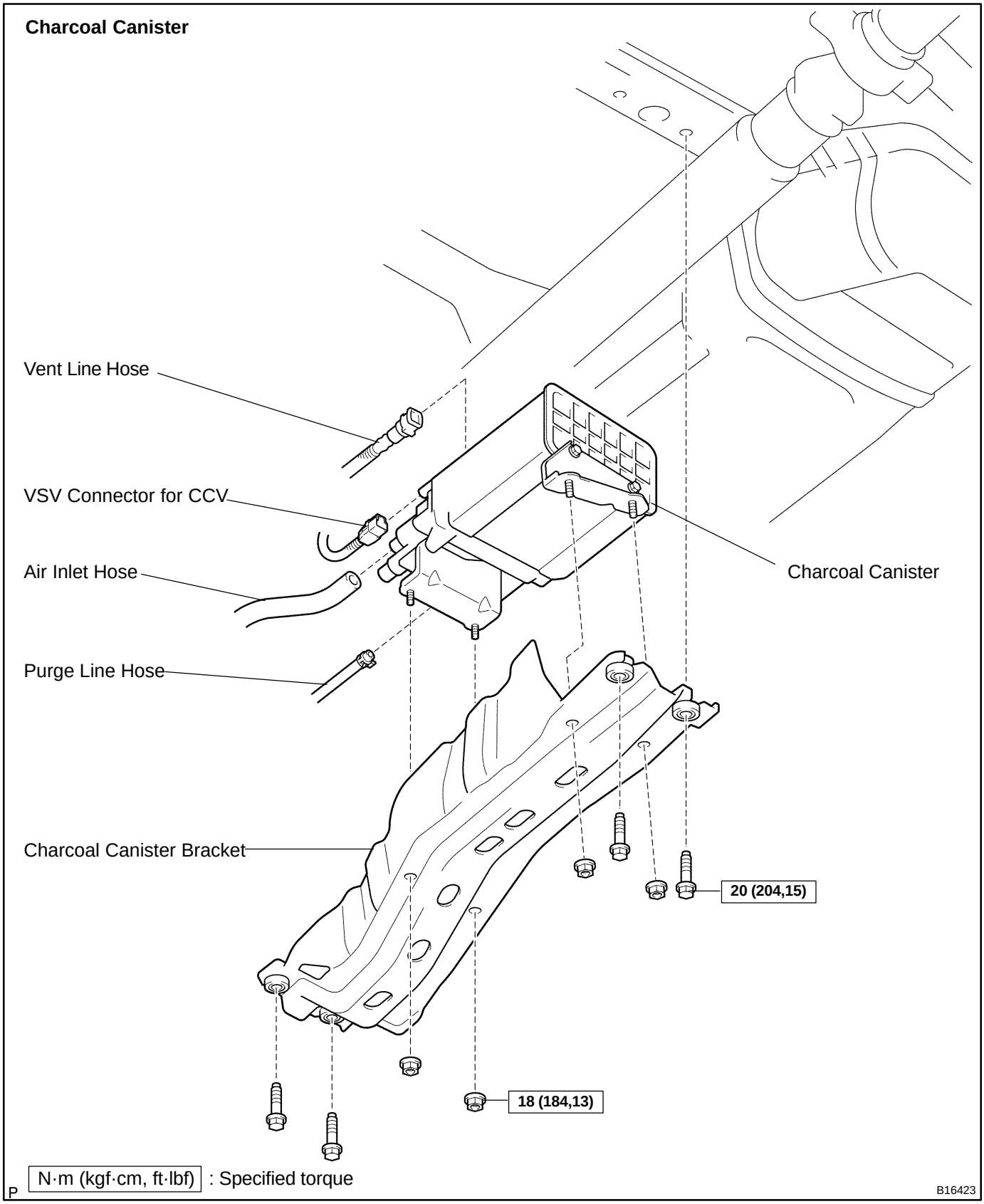

EC0ME–01

INSPECTION

1. INSPECT LINES AND CONNECTIONS

Visually check for loose connections, sharp bends or damage.

2. INSPECT FUEL TANK

Visually check for deformation, cracks or fuel leakage.

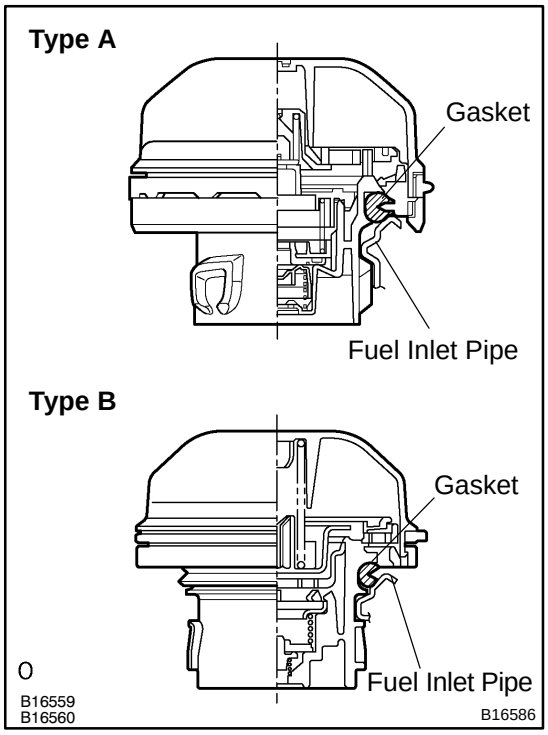

3. INSPECT FUEL TANK CAP

Visually check if the cap and/or gasket are deformed or damaged.

If necessary, repair or replace the cap.

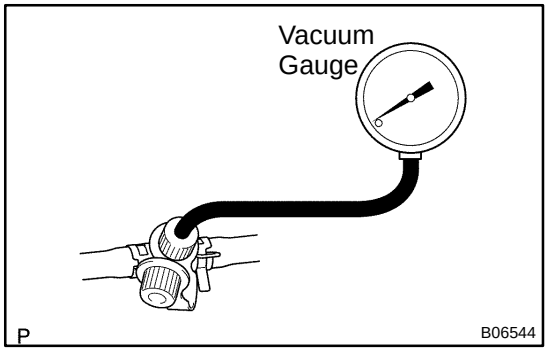

4. INSPECT EVAP SYSTEM LINE

(a) Warm up the engine and stop the engine.
Allow the engine to warm up to normal operating temperature.

(b) Install a vacuum gauge (EVAP control system test equipment vacuum gauge) to the EVAP service port on the purge line.

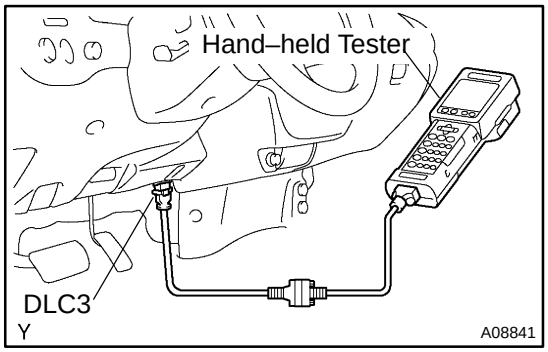

(c) Hand–held tester:
Forced driving of the VSV for the EVAP.
(1) Connect a hand–held tester to the DLC3.
(2) Start the engine.
(3) Push the hand–held tester main switch ON.
(4) Use the ACTIVE TEST mode on the hand–held tester to operate the VSV for the EVAP.

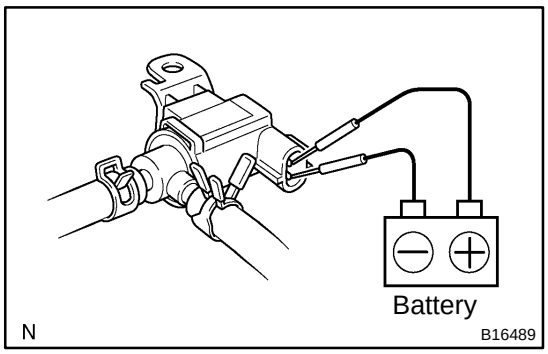

(d) If you have no hand–held tester:
Forced driving of the VSV for the EVAP.
(1) Disconnect the VSV connector for the EVAP.
(2) Connect the positive (+) and negative (–) leads from the battery to the VSV terminals for the EVAP.
(3) Start the engine.

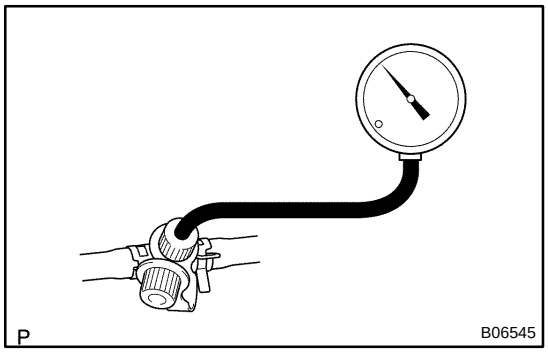

(e) Check the vacuum at idle.
Vacuum:
Maintain at 0.368 – 19.713 in.Hg (5 – 268 in.Aq) for over 5 seconds

HINT:
If the vacuum does not change, you can conclude that the hose connecting the VSV to the service port has come loose or is blocked, or the VSV is malfunctioning.

(f) If you have hand–held tester:
Conclude forced driving of the VSV for the EVAP.
(1) Stop the engine.
(2) Disconnect the hand–held tester from the DLC3.

(g) If you have no hand–held tester:
Conclude forced driving of the VSV for the EVAP.
(1) Stop the engine.
(2) Disconnect the positive (+) and negative (–) leads from the battery, and from the VSV terminals for the EVAP.
(3) Connect the VSV connector for the EVAP.

(h) Disconnect the vacuum gauge from the EVAP service port on the purge line.

(i) Connect a pressure gauge to the EVAP service port on the purge line.

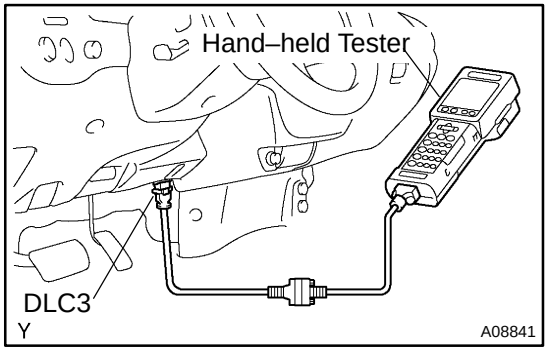

(j) If you have hand–held tester:
Force driving of the VSV for canister closed valve (CCV)
(1) Connect a hand–held tester to the DLC3.
(2) Turn the ignition switch ON.
(3) Push the hand–held tester main switch ON.
(4) Use the ACTIVE TEST mode on the hand–held tester to operate the VSV for CCV.

NOTICE:
Do not start the engine.

HINT:
If the check is not completed within 10 minutes, the forced close of VSV for the CCV will be reset.

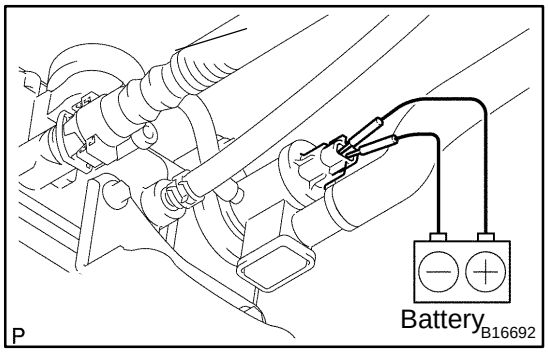

(k) If you have no hand–held tester:
Forced driving of the VSV for the CCV.
(1) Disconnect the VSV connector for the CCV.
(2) Connect the positive (+) and negative (–) leads from the battery to the VSV terminals for the CCV.

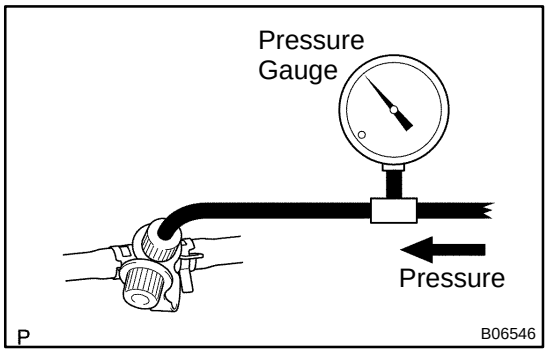

(l) Check the pressure.
(1) Add the pressure (13.5 – 15.5 in.Aq) from the EVAP service port.
Pressure:
2 minutes after the pressure is added, the gauge should be over 7.7 – 8.8 in.Aq.

HINT:
If you can't add pressure, you can conclude that the hose connecting the VSV for EVAP–canister–fuel tank has slipped off or the VSV is open.

(2) Check if the pressure decreases when the fuel tank cap is removed while adding pressure.

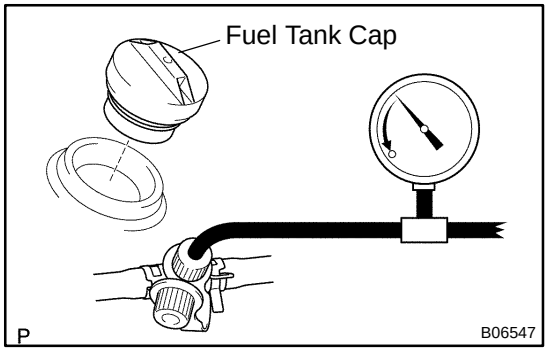

HINT:
If the pressure does not decrease when the filler cap is removed, then you can conclude that the hose connecting the service port to the fuel tank is blocked, etc.

(m) If you have hand–held tester:
Conclude forced driving of he VSV for the CCV.
(1) Turn ignition switch OFF.
(2) Disconnect the hand–held tester from the DLC3.

(n) If you have no hand–held tester:
Conclude forced driving of the VSV for the CCV.
(1) Disconnect the positive (+) and negative (–) leads from the battery, and from the VSV terminals for the CCV.
(2) Connect the VSV connector for the CCV.

(o) Disconnect the pressure gauge from the EVAP service port on the purge line.

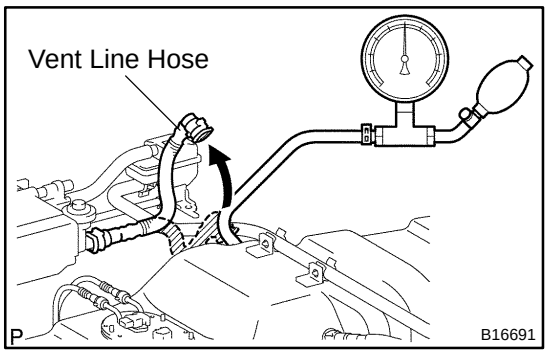

5. CHECK AIR TIGHTNESS IN FUEL TANK AND FILLER PIPE

(a) Disconnect the vent line hose from the fuel tank (See procedure in step 8).
(b) Apply pressure to fuel tank and make the internal pressure of the fuel tank 4 kPa (41 gf/cm^2, 0.58 psi).
(c) Check that the internal pressure of the fuel tank is maintained for 1 minute.
(d) Check the connected portions of each hose and pipe.
(e) Check the installed parts on the fuel tank.

If there is no abnormality, replace the fuel tank and filler pipe.

(f) Reconnect the vent line hose to the fuel tank.

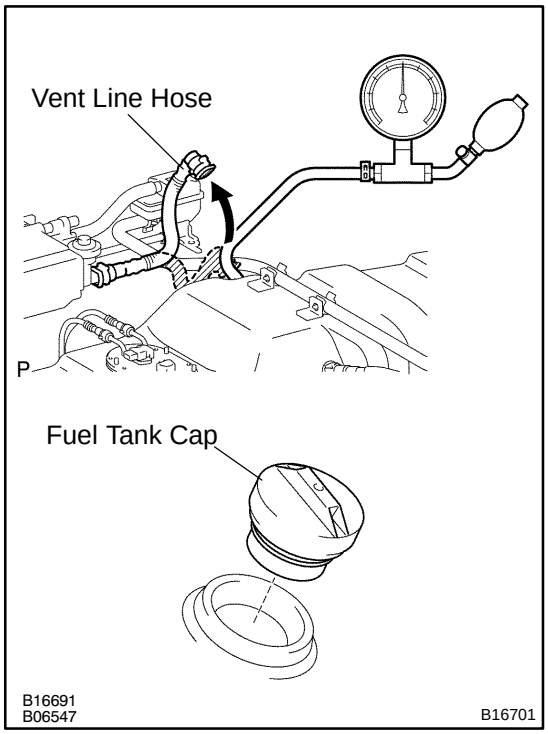

6. INSPECT FUEL CUT OFF VALVE AND FILL CHECK VALVE

(a) Disconnect the vent line hose from the fuel tank.
(b) Apply 4 kPa (41 gf/cm^2, 0.58 psi) to the vent port of the fuel tank.

HINT:

In the condition that the fuel is full, as the float valve of the fill check valve is closed and has no ventilation, it is necessary to check the fuel amount (volume).

(c) Remove the fuel tank cap, and check that pressure drops.

If pressure does not drop, replace the fuel tank assembly.

(d) Reconnect the vent line hose to the fuel tank.

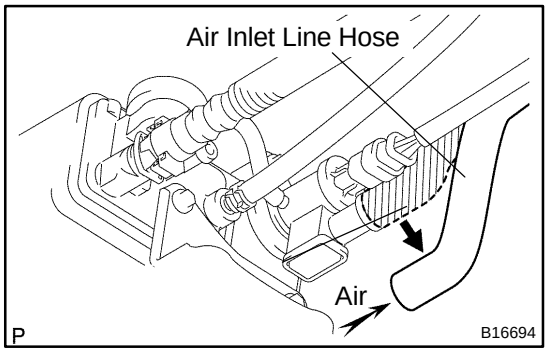

7. CHECK AIR INLET LINE

(a) Disconnect the air inlet line hose from the charcoal canister.
(b) Check that there is ventilation in the air inlet line.
(c) Reconnect the air inlet line hose to the charcoal canister.

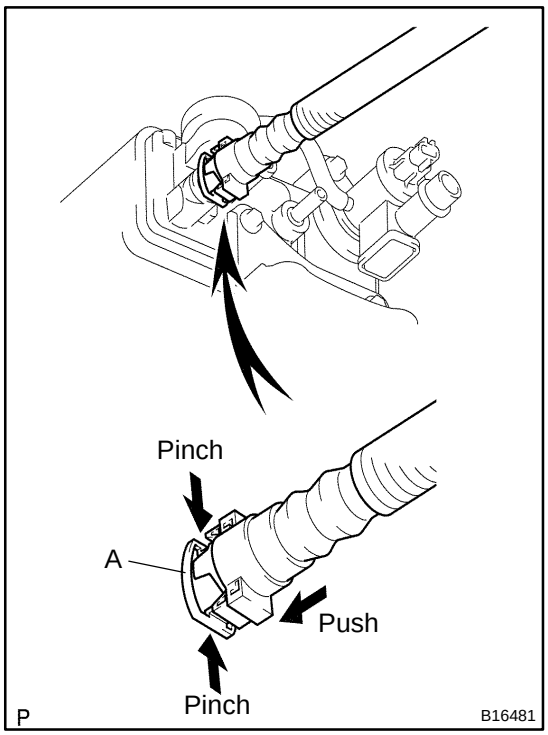

8. REMOVE CHARCOAL CANISTER ASSEMBLY

(a) Remove the 4 bolts, and disconnect the charcoal canister and bracket assembly from the body

(b) Remove the 4 nuts, and disconnect the charcoal canister from the bracket.

(c) Disconnect the VSV connector for the CCV.

(d) Disconnect the purge line hose and air inlet line hose from the charcoal canister.

(e) Disconnect the vent line hose from the charcoal canister.
   (1) Deeply push the connector inside.
   (2) Pinch portion A.
   (3) Pull out the connector.

(f) Remove the charcoal canister.

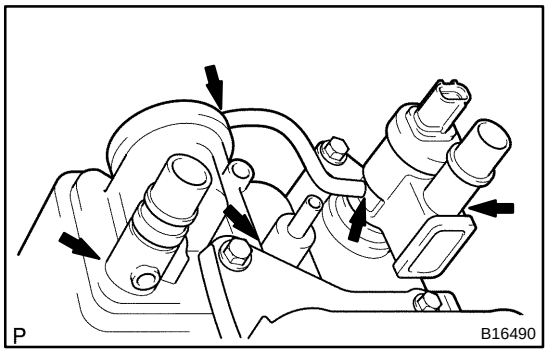

9. INSPECT CHARCOAL CANISTER

(a) Visually check the charcoal canister for cracks or damage.

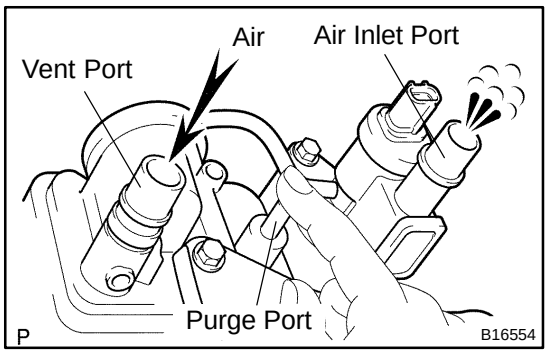

(b) Inspect the charcoal canister operation.
   (1) While holding the purge port closed, blow air (0.39 kPa, 4.0 gf/cm^2, 0.06 psi) into the vent port, and check that air flows out from the air inlet port.

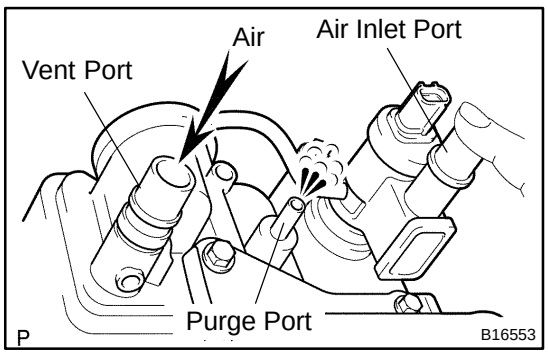

   (2) While holding the air inlet port closed, blow air (0.39 kPa, 4.0 gf/cm^2, 0.06 psi) into the vent port, and check that air flows out from the purge port.

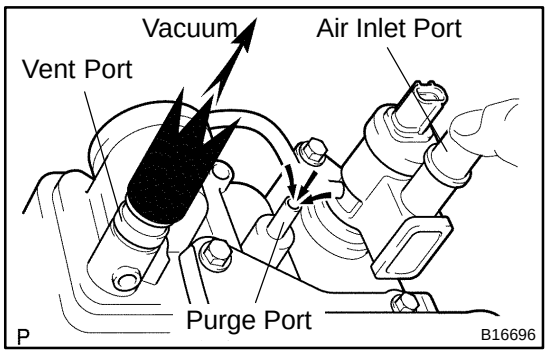

(3) While holding the air inlet port closed, apply vacuum (3.43 kPa, 25.7 gf/cm^2, 1.01 psi) to the vent port, and check that air is sucked in from the purge port.

If operation is not as specified, replace the charcoal canister.

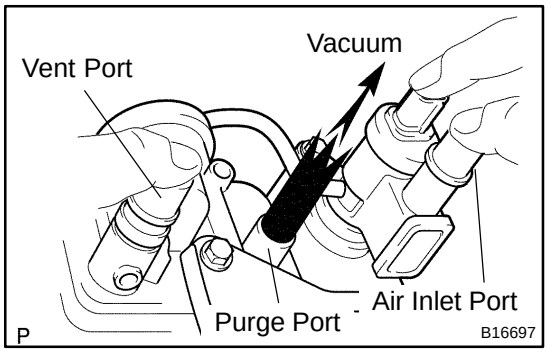

(c) Inspect the air tightness.

(1) While holding the vent and air inlet ports closed, apply vacuum (3.43 kPa, 25.7 gf/cm^2, 1.01 psi) to the purge port, and check that the vacuum is maintained for 1 minute.

HINT:

In order to maintain air tightness, the checked should be performed with the CCV terminal port held closed by hand.

If operation is not as specified, replace the charcoal canister.

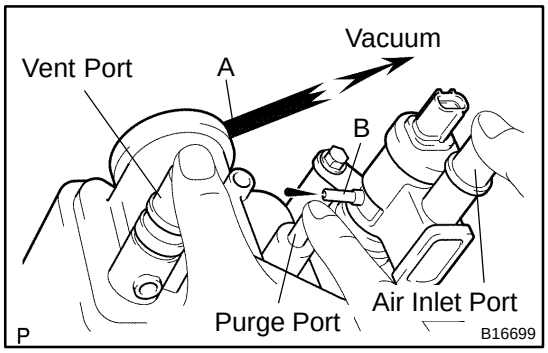

(d) Inspect the diaphragm.

(1) Remove the air hose between ports A and B.

(2) While holding the vent, purge and air inlet ports closed, apply vacuum (1.42 kPa, 11 mmHg, 0.42 in.Hg) into port A, and check that air is sucked in from port B.

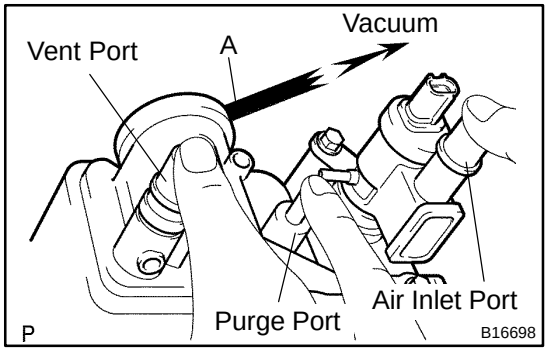

(3) While holding the vent, purge and air inlet ports closed, apply vacuum (1.42 kPa, 11 mmHg, 0.42 in.Hg) into port A, and measure how long it takes for vacuum to drop.

Vacuum drop time: 10 sec. or more

If operation is not as specified, replace the charcoal canister.

(4) Reinstall the air hose between ports A and B.

10. INSPECT CHARCOAL CANISTER FILTER (See page DI–303)

11. INSPECT VSV FOR CANISTER CLOSED VALVE (See page SF–41)

12. INSPECT VAPOR PRESSURE SENSOR (See page SF–45)

13. INSPECT VSV FOR EVAP (See page SF–38)

14. REINSTALL CHARCOAL CANISTER ASSEMBLY

THREE–WAY CATALYTIC CONVERTER (TWC) SYSTEM

EC0CM–01

ON–VEHICLE INSPECTION

1. CHECK EXHAUST PIPE ASSEMBLY

(a) Check the connections for looseness or damage.

(b) Check the clamps for weakness, cracks or damage.

2. INSPECT TWC

Check for dents or damage.

If any part of protector is damaged or dented to the extent that it contacts the TWC, repair or replace it.

3. INSPECT HEAT INSULATOR

(a) Check the heat insulator for damage.

(b) Check for adequate clearance between the TWC and heat insulator.

EC07M–04

COMPONENTS

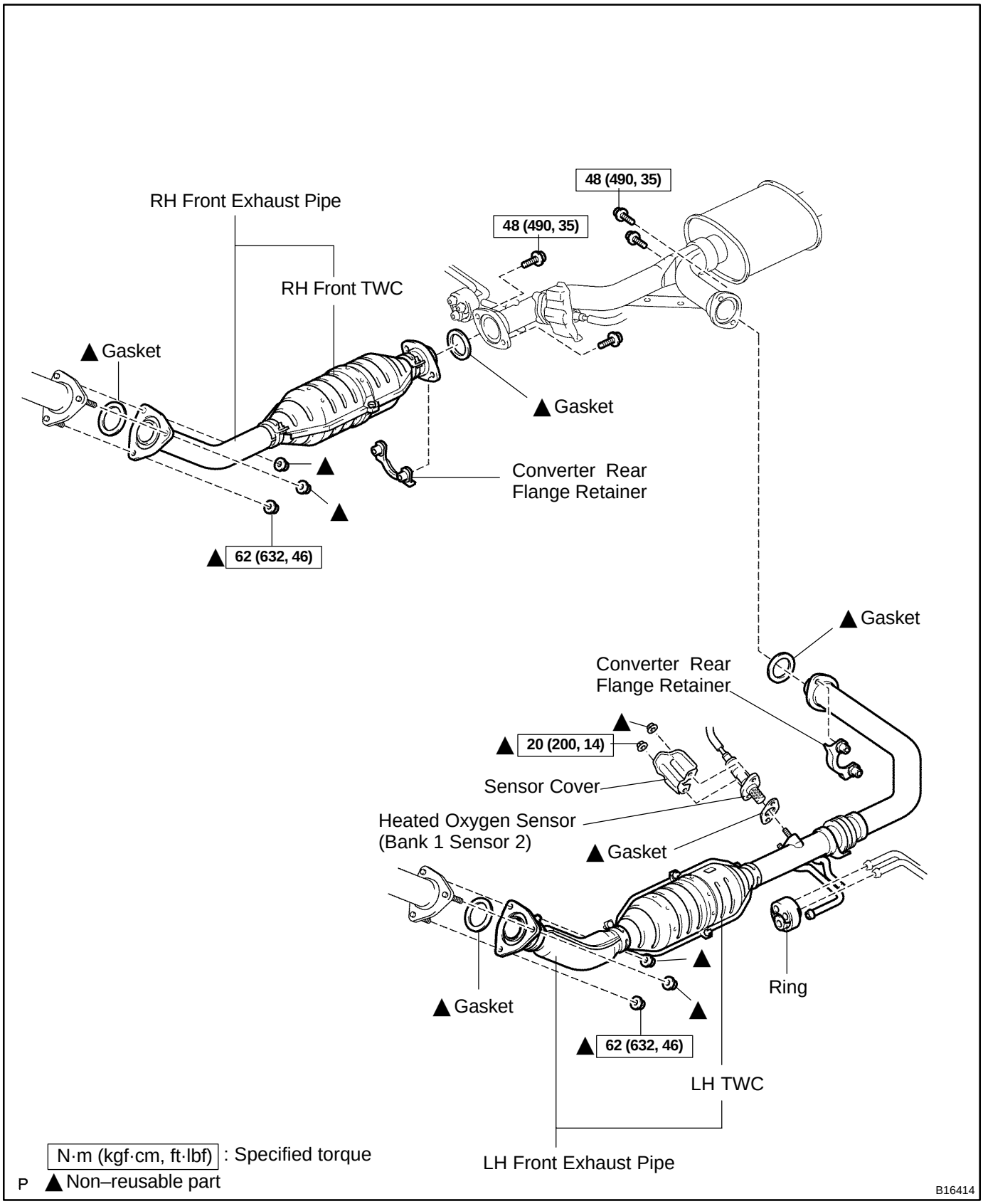

CO/HC

EM06B–05

INSPECTION

1. INITIAL CONDITIONS

(a) Engine at normal operating temperature
(b) Air cleaner installed
(c) All pipes and hoses of air induction system connected
(d) All accessories switched OFF
(e) All vacuum lines properly connected
(f) SFI system wiring connectors fully plugged
(g) Ignition timing checked correctly
(h) Transmission in neutral position
(i) Tachometer and CO/HC meter calibrated by hand

2. START ENGINE

3. RACE ENGINE AT 2,500 RPM FOR APPROX. 180 SECONDS

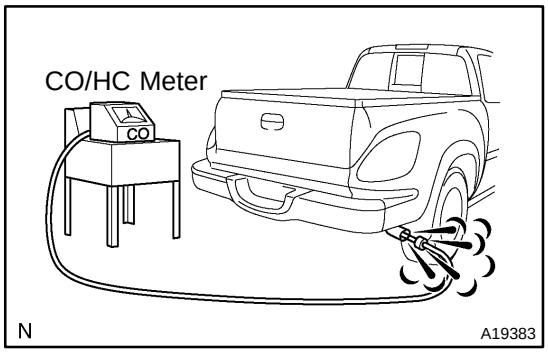

4. INSERT CO/HC METER TESTING PROBE AT LEAST 40 cm (1.3 ft) INTO TAILPIPE DURING IDLING

5. IMMEDIATELY CHECK CO/HC CONCENTRATION AT IDLE AND/OR 2,500 RPM

HINT:

When doing the 2 mode (2,500 rpm and idle) test, follow the measurement orders are prescribed by the applicable local regulations

If the CO/HC concentration does not comply with regulations, troubleshooting in the order given below.

(1) Check the A/F sensor operation (See page DI–167).

(2) See the table below for possible causes, and then inspect and correct the applicable causes if necessary.

CO	HC	Problems	Causes
Normal	High	Rough idle	3. Faulty ignitions: ▲Incorrect timing ▲Fouled, shorted or improperly gapped plugs ▲Open or crossed high–tension codes 4. Incorrect valve clearance 5. Leaky intake and exhaust valves 6. Leaky cylinders
Low	High	Rough idle (Fluctuating HC reading)	1. Vacuum leaks: ▲PCV hose ▲Intake manifold ▲Air intake chamber ▲Intake air connector ▲Throttle body ▲Brake booster line 2. Lean mixture causing misfire
High	High	Rough idle (Black smoke from exhaust)	1. Restricted air filter 2. Plugged PCV valve 3. Faulty SFI system: ▲Faulty fuel pressure regulator ▲Clogged fuel return line ▲Defective ECT sensor ▲Faulty ECM ▲Faulty injectors ▲Faulty throttle position sensor ▲Faulty MAF meter

COMPRESSION

EM06C–04

INSPECTION

HINT:

If there is lack of power, excessive oil consumption or poor fuel economy, measure the compression pressure.

1. WARM UP AND STOP ENGINE

Allow the engine to warm up to normal operating temperature.

2. REMOVE HIGH–TENSION CORDS WITH IGNITION COILS (See page IG–1)

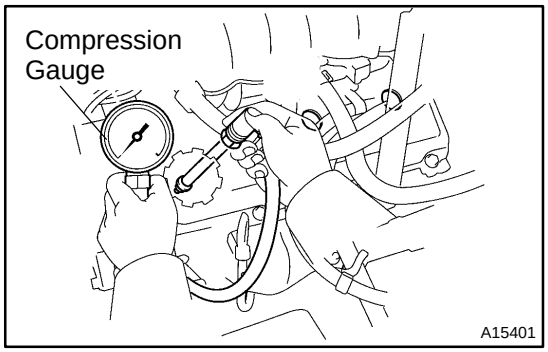

3. REMOVE SPARK PLUGS

4. CHECK CYLINDER COMPRESSION PRESSURE

(a) Insert a compression gauge into the spark plug hole.

(b) Fully open the throttle.

(c) While cranking the engine, measure the compression pressure.

HINT:

Always use a fully charged battery to obtain engine speed of 250 rpm or more.

(d) Repeat steps (a) through (c) for each cylinder.

NOTICE:

This measurement must be done in as short a time as possible.

Compression pressure:
1,200 kPa (12.2 kgf/cm^2, 174 psi) or more
Minimum pressure: 1,000 kPa (10.2 kgf/cm^2, 145 psi)
Difference between each cylinder:
100 kPa (1.0 kgf/cm^2, 15 psi) or less

(e) If the cylinder compression in 1 or more cylinders is low, pour small amount of engine oil into the cylinder through the spark plug hole and repeat steps (a) through (c) for cylinders with low compression.

- If adding oil helps the compression, it is likely that the piston rings and/or cylinder bore are worn or damaged.
- If pressure stays low, a valve may be sticking or seating is improper, or there may be leakage past the gasket.

5. REINSTALL SPARK PLUGS

Torque: 18 N·m (180 kgf·cm, 13 ft·lbf)

6. REINSTALL HIGH–TENSION CORDS WITH IGNITION COILS (See page IG–1)

VALVE CLEARANCE

INSPECTION

EM06D–04

HINT:

Inspect and adjust the valve clearance when the engine is cold.

1. **DRAIN ENGINE COOLANT**
2. **REMOVE INTAKE AIR CONNECTOR (See page EM–64)**
3. **REMOVE CYLINDER HEAD COVERS (See page EM–31)**
4. **SET NO. 1 CYLINDER TO TDC/COMPRESSION**

(a) Turn the crankshaft pulley, and align its groove with the timing mark 0 of the No. 1 timing belt cover.

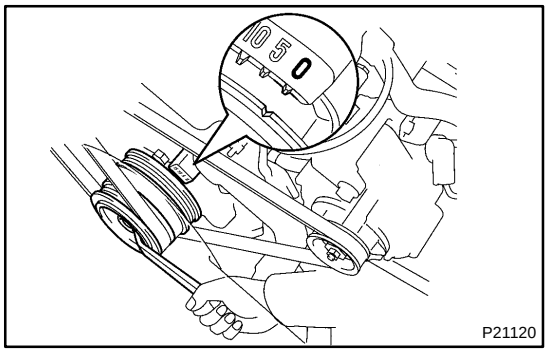

(b) Check that the timing marks (1 dot) of the camshaft drive and driven gears are in straight line on the cylinder heads surface as shown in the illustration.

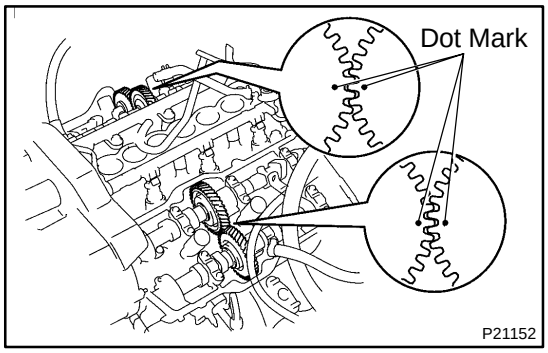

If not, turn the crankshaft 1 revolution (360°) and align the marks.

5. **INSPECT VALVE CLEARANCE**

(a) Check only the valves indicated in the illustration.

▲ Using a feeler gauge, measure the clearance between the valve lifter and camshaft.

▲ Record out of specification valve clearance measurements. They will be used later to determine the required replacement adjusting shim.

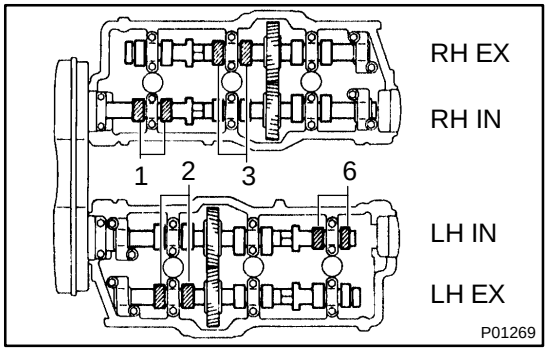

Valve clearance (Cold):

Intake	0.13 – 0.23 mm (0.006 – 0.009 in.)
Exhaust	0.27 – 0.37 mm (0.011 – 0.014 in.)

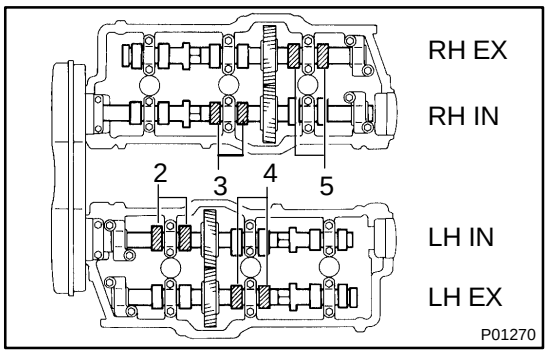

(b) Turn the crankshaft 2/3 of a revolution (240˚), and check only the valves indicated in the illustration. Measure the valve clearance (See procedure step (a)).

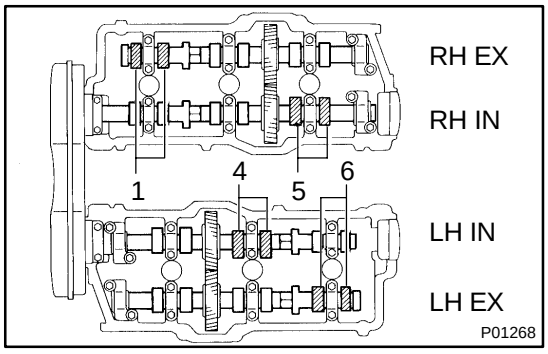

(c) Turn the crankshaft a further 2/3 of a revolution (240˚), and check only the valves indicated in the illustration. Measure the valve clearance (See procedure step (a)).

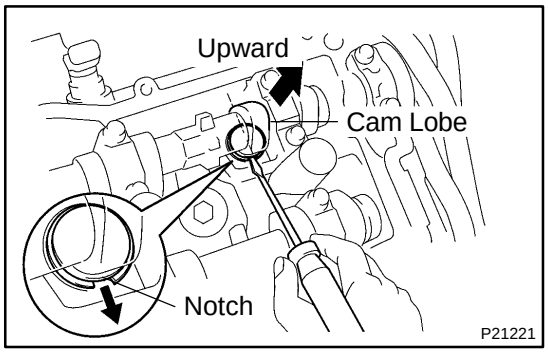

6. ADJUST VALVE CLEARANCE

(a) Remove the adjusting shim.

▲ Turn the camshaft so that the cam lobe for the valve to be adjusted faces up.

▲ Turn the valve lifter with a screwdriver so that the notches are perpendicular to the camshaft.

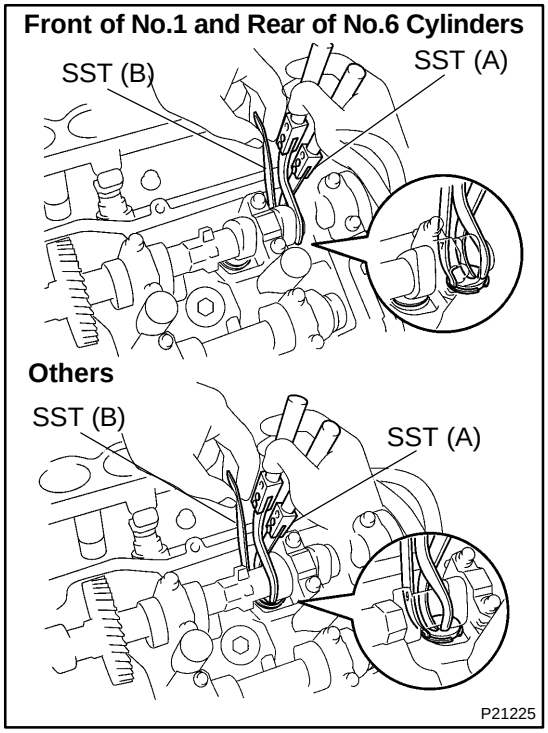

▲ Using SST (A), press down the valve lifter and place SST (B) between the camshaft and valve lifter. Remove SST (A).

SST 09248–55040 (09248–05410, 09248–05420)

HINT:

▲ Apply SST (B) at a slight angle on the side marked with ”9” or ”7”, at the position shown in the illustration.

▲ When SST (B) is inserted too deeply, it will get pinched by the shim. To prevent it from being stuck, insert it gently from the intake side, at a slight angle.

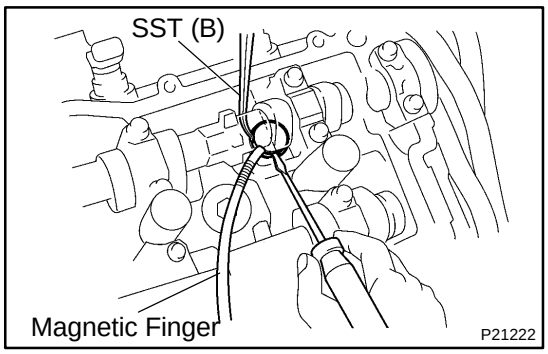

▲ Using a small screwdriver and magnetic finger, remove the adjusting shim.

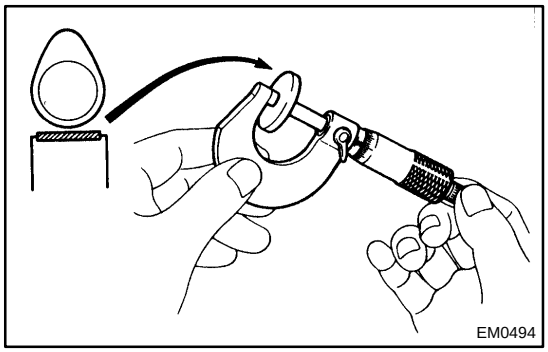

(b) Determine the replacement adjusting shim size according to these Formula or Charts:

(1) Using a micrometer, measure the thickness of the removed shim.

(2) Calculate the thickness of a new shim so that the valve clearance comes within the specified value.

T ..... Thickness of used shim
A ..... Measured valve clearance
N ..... Thickness of new shim

Intake	N = T + (A – 0.18 mm (0.007 in.))
Exhaust	N = T + (A – 0.32 mm (0.013 in.))

(3) Select a new shim with thickness as close as possible to the calculated values.

HINT:

Shims are available in 17 sizes in increments of 0.050 mm (0.0020 in.), from 2.500 mm (0.0984 in.) to 3.300 mm (0.1299 in.).

Adjusting Shim Selection Chart (Intake)

| Measured clearance mm (in.) \ Installed shim thickness mm (in.) | 2.500 (0.0984) | 2.520 (0.0992) | 2.540 (0.1000) | 2.550 (0.1004) | 2.560 (0.1008) | 2.580 (0.1016) | 2.600 (0.1024) | 2.620 (0.1031) | 2.640 (0.1039) | 2.650 (0.1043) | 2.660 (0.1047) | 2.670 (0.1051) | 2.680 (0.1055) | 2.690 (0.1059) | 2.700 (0.1063) | 2.710 (0.1067) | 2.720 (0.1071) | 2.730 (0.1075) | 2.740 (0.1079) | 2.750 (0.1083) | 2.760 (0.1087) | 2.770 (0.1091) | 2.780 (0.1094) | 2.790 (0.1098) | 2.800 (0.1102) | 2.810 (0.1106) | 2.820 (0.1110) | 2.830 (0.1114) | 2.840 (0.1118) | 2.850 (0.1122) | 2.860 (0.1126) | 2.870 (0.1130) | 2.880 (0.1134) | 2.890 (0.1138) | 2.900 (0.1142) | 2.910 (0.1146) | 2.920 (0.1150) | 2.930 (0.1154) | 2.940 (0.1157) | 2.950 (0.1161) | 2.960 (0.1165) | 2.970 (0.1169) | 2.980 (0.1173) | 2.990 (0.1177) | 3.000 (0.1181) | 3.010 (0.1185) | 3.020 (0.1189) | 3.030 (0.1193) | 3.040 (0.1197) | 3.050 (0.1201) | 3.060 (0.1205) | 3.080 (0.1213) | 3.100 (0.1220) | 3.120 (0.1228) | 3.140 (0.1236) | 3.150 (0.1240) | 3.160 (0.1244) | 3.180 (0.1252) | 3.200 (0.1260) | 3.220 (0.1268) | 3.240 (0.1276) | 3.250 (0.1280) | 3.260 (0.1283) | 3.280 (0.1291) | 3.300 (0.1299) |
|---|---|---

Adjusting Shim Selection Chart (Exhaust)

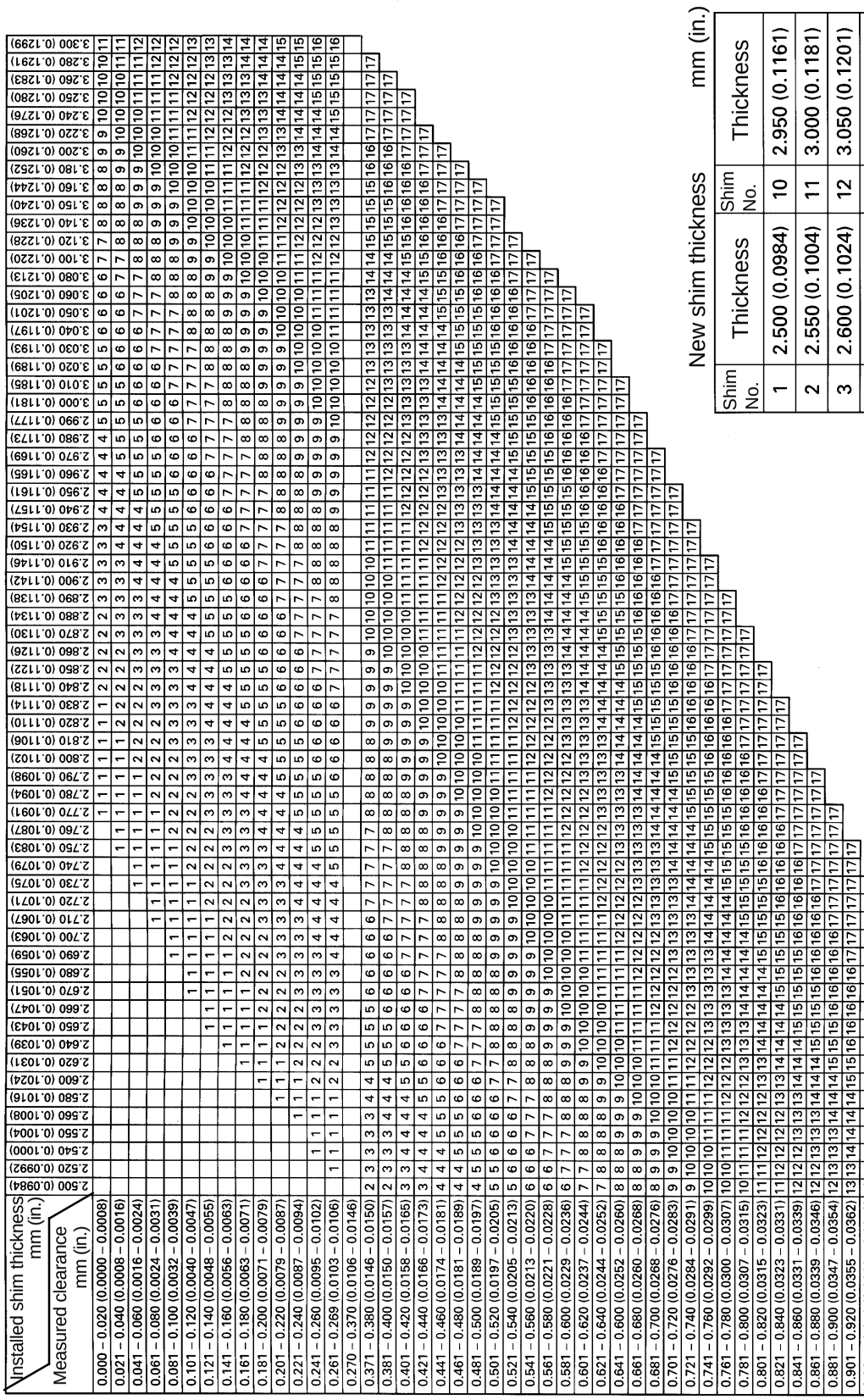

Exhaust valve clearance (Cold):
0.27 – 0.37 mm (0.011 – 0.014 in.)

EXAMPLE:
The 2.800 mm (0.1102 in.) shim is installed and measured clearance is 0.450 mm (0.0177 in.).
Replace the 2.800 mm (0.1102 in.) shim with a No.10 shim.

New shim thickness mm (in.)

Shim No.	Thickness	Shim No.	Thickness
1	2.500 (0.0984)	10	2.950 (0.1161)
2	2.550 (0.1004)	11	3.000 (0.1181)
3	2.600 (0.1024)	12	3.050 (0.1201)
4	2.650 (0.1043)	13	3.100 (0.1220)
5	2.700 (0.1063)	14	3.150 (0.1240)
6	2.750 (0.1083)	15	3.200 (0.1260)
7	2.800 (0.1102)	16	3.250 (0.1280)
8	2.850 (0.1122)	17	3.300 (0.1299)
9	2.900 (0.1142)		

HINT:
New shims have the thickness in millimeters imprinted on the face.

V06209

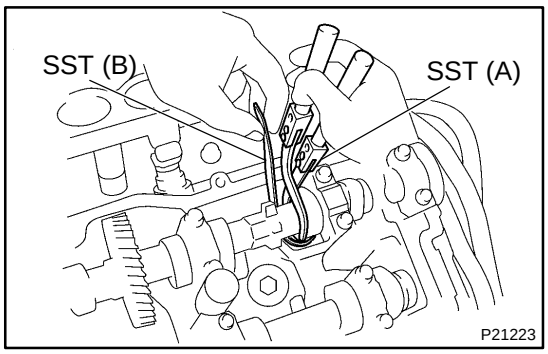

(c) Install a new adjusting shim.
  (1) Place a new adjusting shim on the valve lifter, with imprinted numbers facing down.
  (2) Press down the valve lifter with SST (A), and remove SST (B).

SST 09248–55040 (09248–05410, 09248–05420)

(d) Recheck the valve clearance.

7. REINSTALL CYLINDER HEAD COVERS (See page EM–51)

8. REINSTALL INTAKE AIR CONNECTOR (See page EM–67)

9. REFILL WITH ENGINE COOLANT

10. START ENGINE AND CHECK FOR LEAKS

IGNITION TIMING

EM06E–06

INSPECTION

1. WARM UP ENGINE

Allow the engine to warm up to normal operating temperature.

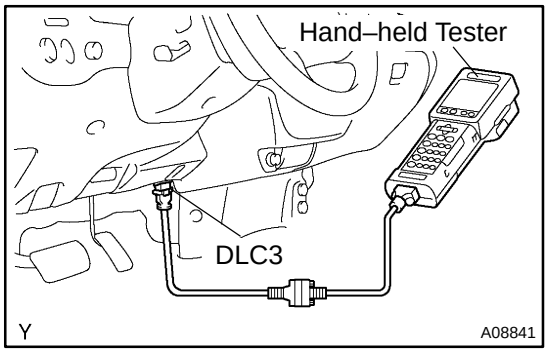

2. CONNECT HAND–HELD TESTER OR OBD II SCAN TOOL

(a) Connect a hand–held tester or OBD II scan tool to the DLC3.

(b) Please refer to the hand–held tester or OBD II scan tool operator's for further details.

3. CHECK IDLE SPEED (See page EM–11)

4. CONNECT TIMING LIGHT TO ENGINE

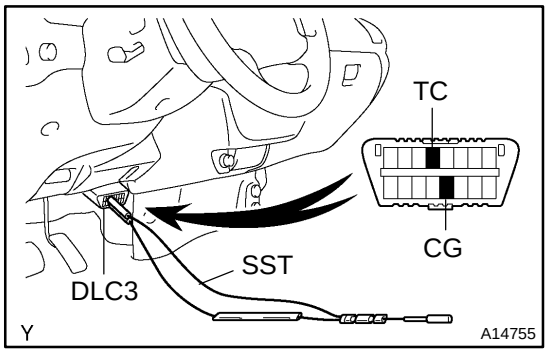

5. INSPECT IGNITION TIMING

(a) Using SST, connect terminals TC and CG of the DLC3.
SST 09843–18040

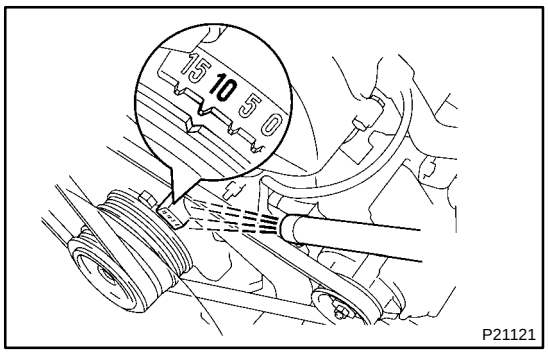

(b) Using a timing light, check the ignition timing.
Ignition timing:
8 – 12° BTDC @ idle
(Transmission in neutral position)

(c) Remove the SST from the DLC3.
SST 09843–18020

6. FURTHER CHECK IGNITION TIMING
Ignition timing:
12.5 – 22° BTDC @ idle
(Transmission in neutral position)

HINT:
The timing mark moves in a range between 12.5° and 22°.

7. DISCONNECT TIMING LIGHT FROM ENGINE

8. DISCONNECT HAND–HELD TESTER OR OBD II SCAN TOOL

IDLE SPEED

EM06F–03

INSPECTION

1. INITIAL CONDITIONS

(a) Engine at normal operating temperature
(b) Air cleaner installed
(c) All pipes and hoses of air induction system connected
(d) All accessories switched OFF
(e) All vacuum lines properly connected
(f) SFI system wiring connectors fully plugged
(g) Ignition timing checked correctly
(h) Transmission in neutral position

2. CONNECT HAND–HELD TESTER OR OBD II SCAN TOOL (See page EM–10)

3. INSPECT IDLE SPEED

(a) Race the engine speed at 2,500 rpm for approx. 90 seconds.
(b) Check the idle speed.
Idle speed: 700 ± 50 rpm

If the idle speed is not as specified, check the air intake system.

4. DISCONNECT HAND–HELD TESTER OR OBD II SCAN TOOL

TIMING BELT

COMPONENTS

EM06G–04

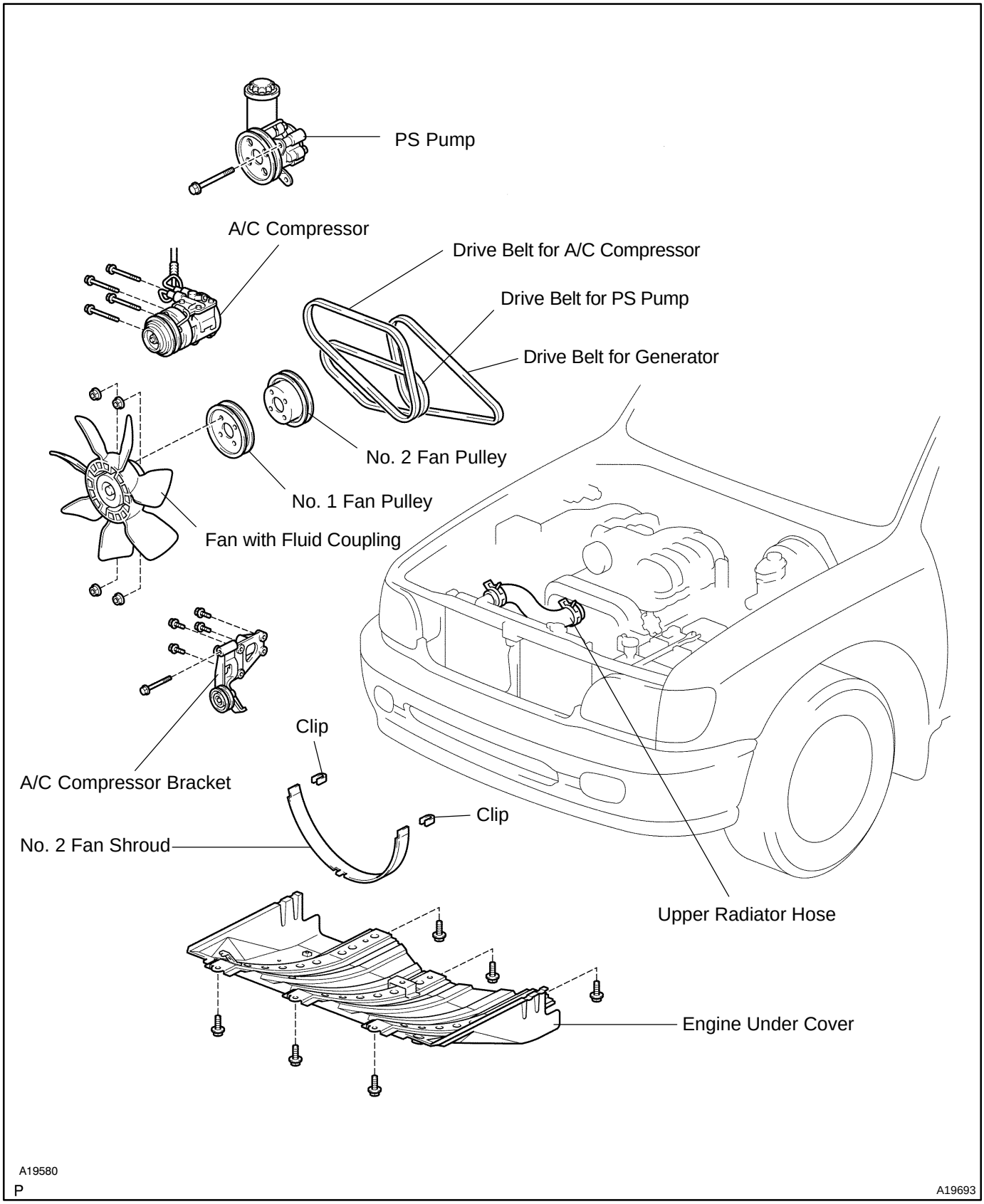

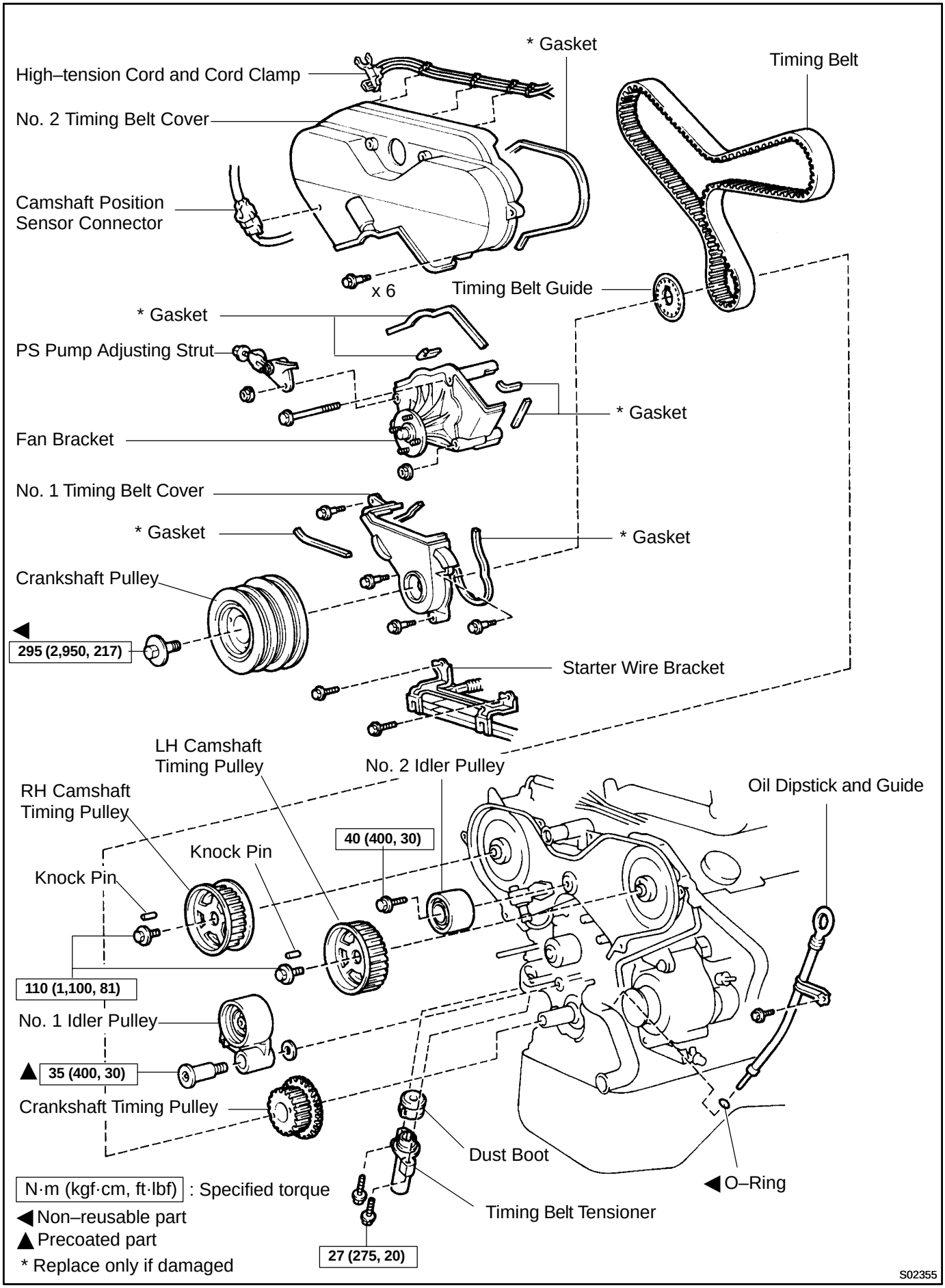
* Gasket
Timing Belt
High–tension Cord and Cord Clamp
No. 2 Timing Belt Cover
Camshaft Position Sensor Connector
x 6
Timing Belt Guide
* Gasket
PS Pump Adjusting Strut
* Gasket
Fan Bracket
No. 1 Timing Belt Cover
* Gasket
* Gasket
Crankshaft Pulley
◀ 295 (2,950, 217)
Starter Wire Bracket
LH Camshaft Timing Pulley
No. 2 Idler Pulley
Oil Dipstick and Guide
RH Camshaft Timing Pulley
40 (400, 30)
Knock Pin
Knock Pin
110 (1,100, 81)
No. 1 Idler Pulley
▲ 35 (400, 30)
Crankshaft Timing Pulley
Dust Boot
◀ O–Ring
Timing Belt Tensioner
27 (275, 20)
N·m (kgf·cm, ft·lbf) : Specified torque
◀ Non–reusable part
▲ Precoated part
* Replace only if damaged
S02355

EM12C–03

REMOVAL

1. REMOVE ENGINE UNDER COVER
2. DRAIN ENGINE COOLANT
3. DISCONNECT UPPER RADIATOR HOSE

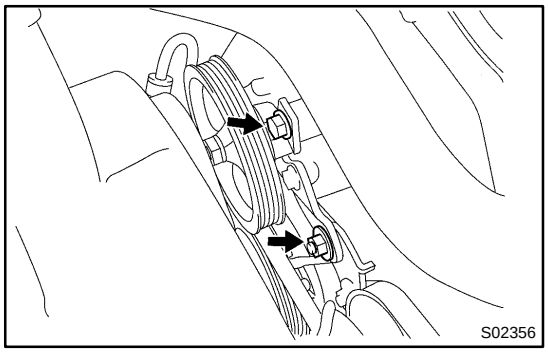

4. DISCONNECT PS PUMP FROM ENGINE

(a) Disconnect the 2 PS air hoses from the air intake chamber and resonator.
(b) Remove the bolt holding the PS pressure tube clamp to the frame.
(c) Remove the drive belt (See page SR–32).
(d) Remove the bolt and nut, and disconnect the PS pump from the engine.

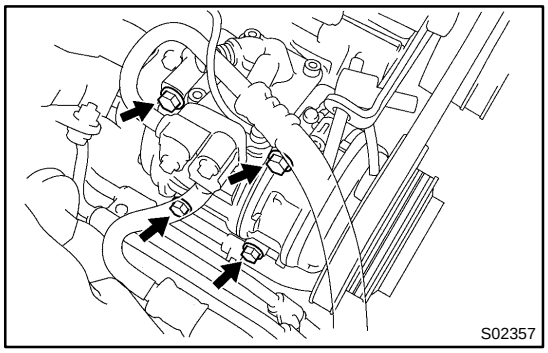

5. DISCONNECT A/C COMPRESSOR FROM ENGINE

(a) Disconnect the A/C compressor connector.
(b) Remove the drive belt (See page AC–17).
(c) Remove the 4 bolts, and disconnect the A/C compressor from the engine.

6. LOOSEN FAN WITH FLUID COUPLING AND FAN PULLEYS
7. REMOVE DRIVE BELT FOR GENERATOR
8. REMOVE NO. 2 FAN SHROUD
9. REMOVE FAN WITH FLUID COUPLING AND FAN PULLEYS

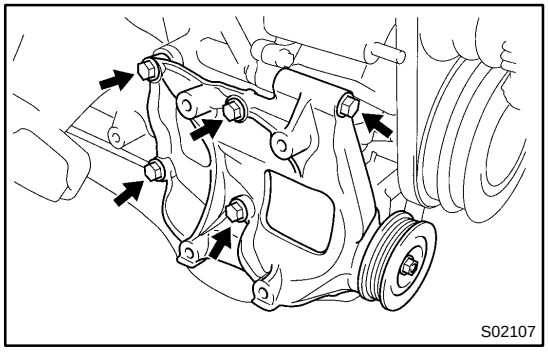

10. REMOVE A/C COMPRESSOR BRACKET

Remove the 5 bolts and A/C compressor bracket.

11. DISCONNECT UPPER RADIATOR HOSE

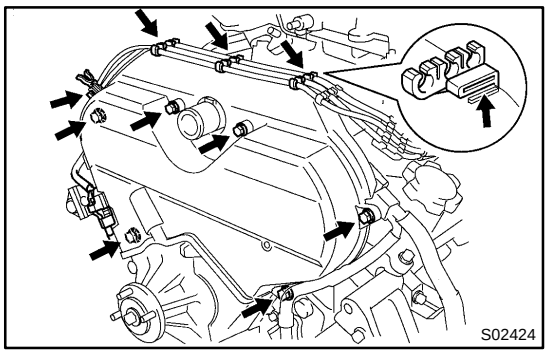

12. REMOVE NO. 2 TIMING BELT COVER

(a) Disconnect the camshaft position sensor connector from the timing belt cover.
(b) Disconnect the 4 high–tension cord clamps from the timing belt cover.
(c) Remove the 6 bolts and timing belt cover.

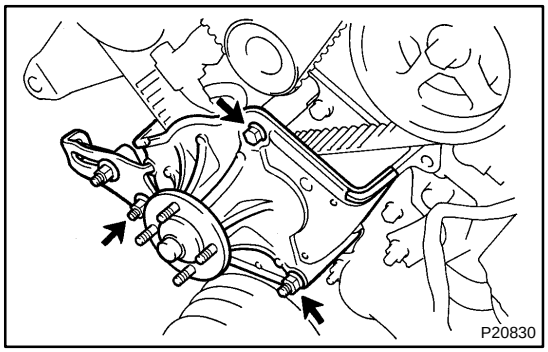

13. REMOVE FAN BRACKET

(a) Remove the nut and PS pump adjusting strut.
(b) Remove the bolt, nut and fan bracket.

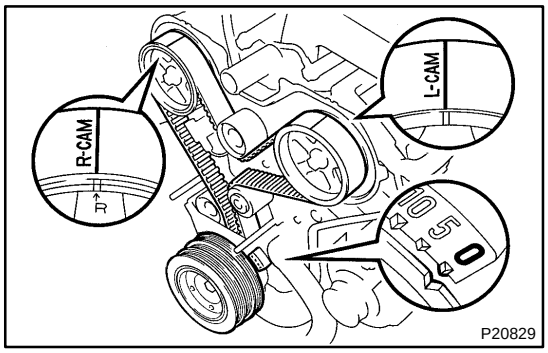

14. SET NO. 1 CYLINDER AT TDC/COMPRESSION

(a) Turn the crankshaft pulley and align its groove with timing mark ”0” of the No. 1 timing belt cover.
(b) Check that the timing marks of the camshaft timing pulleys and No. 3 timing belt cover are aligned.

If not, turn the crankshaft pulley 1 revolution (360˚).

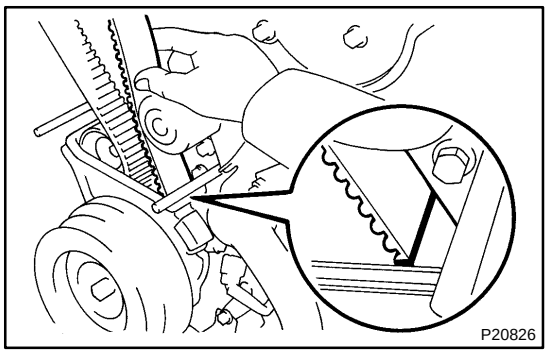

HINT:
When re–using timing belt:
Place the matchmarks on the timing belt and camshaft timing pulleys, and place matchmark on timing belt to match the end of the No.1 timing belt cover.

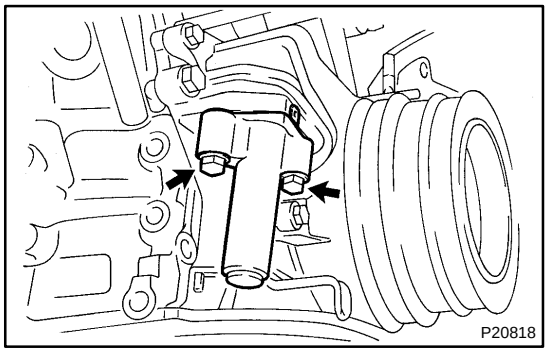

15. REMOVE TIMING BELT TENSIONER

Alternately loosen the 2 bolts, and remove them, the belt tensioner and dust boot.

16. REMOVE TIMING BELT

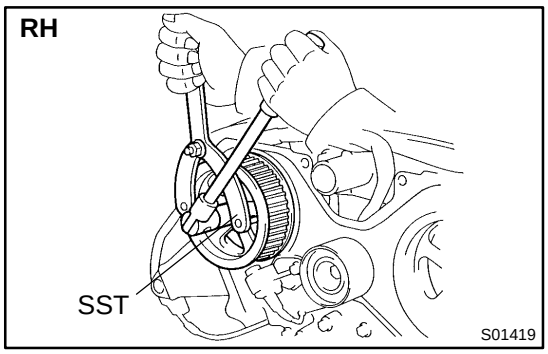

17. REMOVE RH CAMSHAFT TIMING PULLEY

Using SST, loosen the pulley bolt.

SST 09960–10010 (09962–01000, 09963–01000)

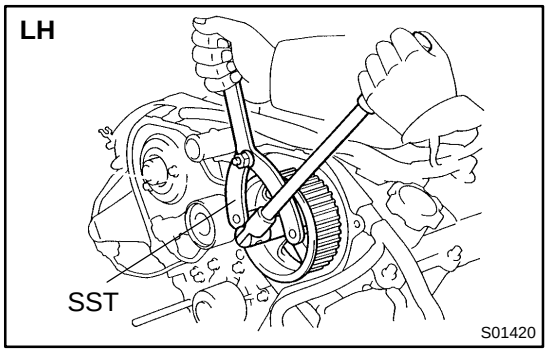

18. REMOVE LH CAMSHAFT TIMING PULLEY

(a) Using SST, loosen the pulley bolt.
SST 09960–10010 (09962–01000, 09963–01000)

(b) Remove the bolt, knock pin and camshaft timing pulley.

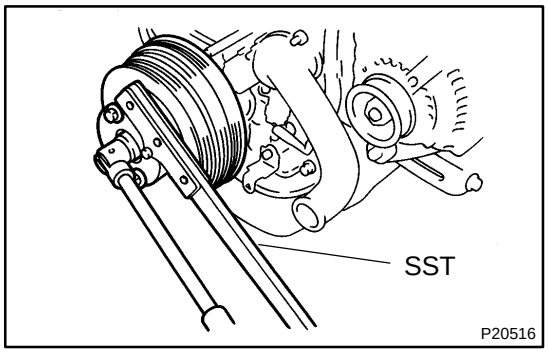

19. REMOVE CRANKSHAFT PULLEY

(a) Using SST, loosen the pulley bolt.
SST 09213–54015 (90119–08216), 09330–00021

(b) Remove the SST, pulley bolt and pulley.

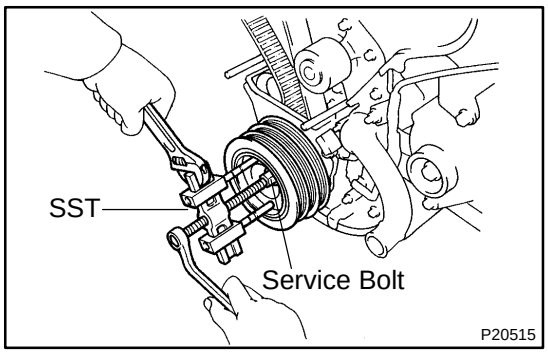

HINT:

If necessary, remove the pulley with SST and service bolt.

SST 09950–50013 (09551–05010, 09552–05010, 09553–05020, 09554–05031)

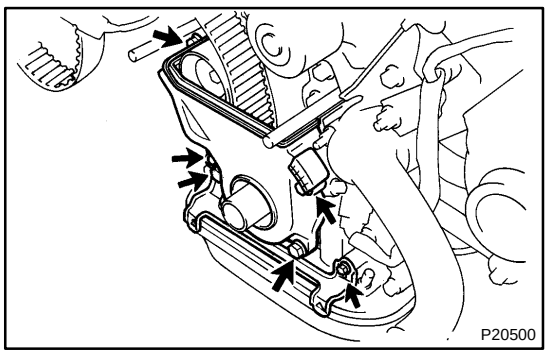

20. REMOVE STARTER WIRE BRACKET AND NO. 1 TIMING BELT COVER

(a) Remove the 2 bolts and starter wire bracket.

(b) Remove the 4 bolts and timing belt cover.

21. REMOVE TIMING BELT GUIDE

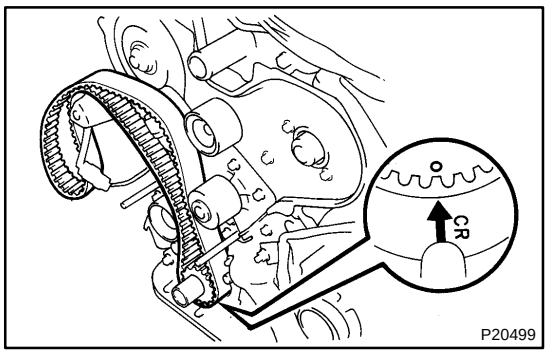

22. REMOVE TIMING BELT

HINT:

When re–using timing belt:

If the installation marks have disappeared, place a new installation mark on the timing belt to match the drilled mark of the crankshaft timing pulley.

23. REMOVE NO. 2 IDLER PULLEY

(a) Remove the bolt and idler pulley.

24. REMOVE NO. 1 IDLER PULLEY

(a) Using a 10 mm hexagon wrench, remove the pivot bolt, idler pulley and plate washer.

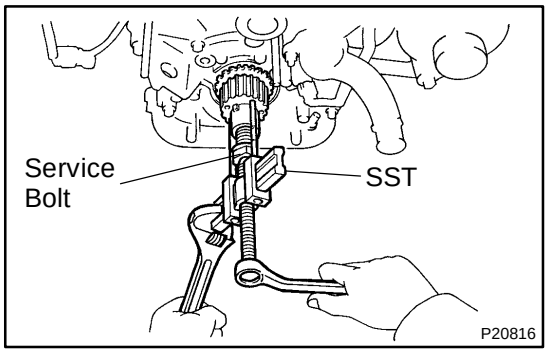

25. REMOVE CRANKSHAFT TIMING PULLEY

Remove the crankshaft timing pulley.

HINT:

If the pulley cannot be removed by hand, use SST and service bolt to remove the crankshaft timing pulley.

SST 09950–50013 (09951–05010, 09952–05010, 09953–05020, 09954–05011)

EM06I–05

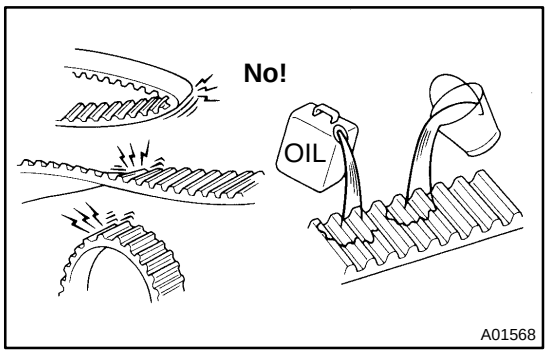

INSPECTION

1. INSPECT TIMING BELT

NOTICE:

Do not bend, twist or turn the timing belt inside out. Do not allow the timing belt to come into contact with oil, water or steam. Do not utilize timing belt tension when installing or removing the mount bolt of the camshaft timing pulley.

If there is any defect, as shown in the illustration, check these points:

(a) Premature parting.
- ▲ Check for proper installation.
- ▲ Check the timing cover gasket for damage and proper installation.

(b) If the belt teeth are cracked or damaged, check to see if either camshaft is locked.

(c) If there is noticeable wear or cracks on the belt face, check to see if there are nicks on the side of the idler pulley lock and water pump.

(d) If there is wear or damage on even one side of the belt, check the belt guide and the alignment of each pulley.

(e) If there is noticeable wear on the belt teeth, check timing cover for damage and check that gasket has been installed correctly and for foreign material on the pulley teeth.

If necessary, replace the timing belt.

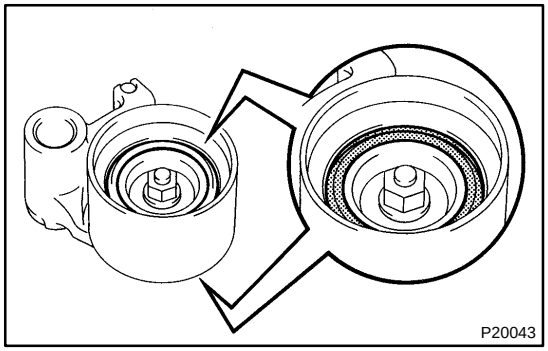

2. INSPECT IDLER PULLEYS

(a) Visually check the seal portion of the idler pulley for oil leakage.

If leakage is found, replace the idler pulley.

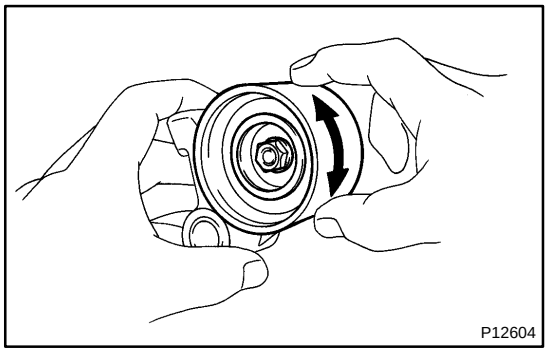

(b) Check that the idler pulley turns smoothly.

If necessary, replace the idler pulley.

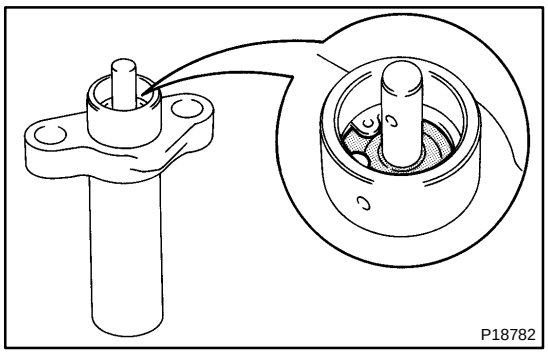

3. INSPECT TIMING BELT TENSIONER

(a) Visually check the seal portion of the tensioner for oil leakage.

HINT:

If there is only the faintest trace of oil on the seal on the push rod side, the tensioner is all right.

If leakage is found, replace the tensioner.

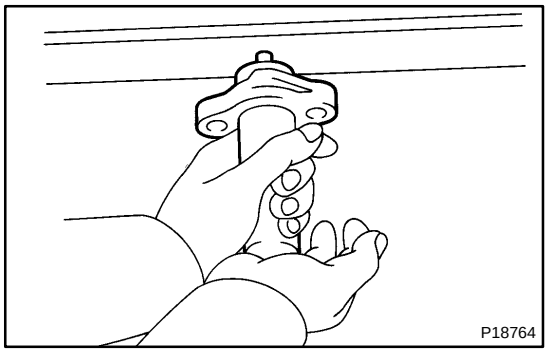

(b) Hold the tensioner with both hands and push the push rod strongly as shown to check that it doesn't move.

If the push rod moves, replace the tensioner.

NOTICE:

Never hold the tensioner push rod facing downward.

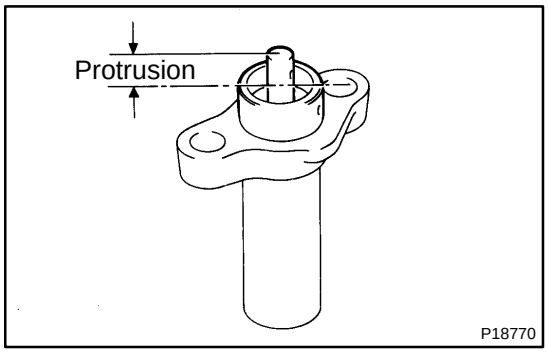

(c) Measure the protrusion of the push rod from the housing end.

Protrusion: 10.0 – 10.8 mm (0.394 – 0.425 in.)

If the protrusion is not as specified, replace the tensioner.

EM1V0–01

INSTALLATION

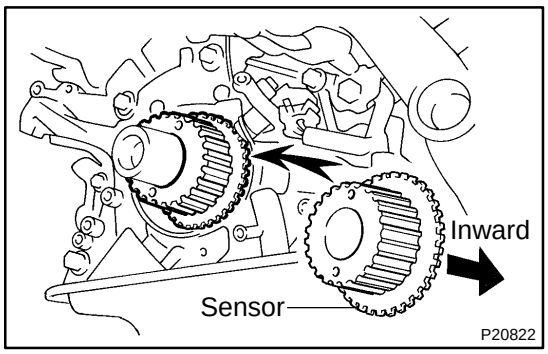

1. INSTALL CRANKSHAFT TIMING PULLEY

(a) Align the pulley set key with the key groove of the timing pulley and slide it on the timing pulley.

(b) Slide on the timing pulley, facing the flange side inward.

NOTICE:

Do not scratch the sensor part of the crankshaft timing pulley.

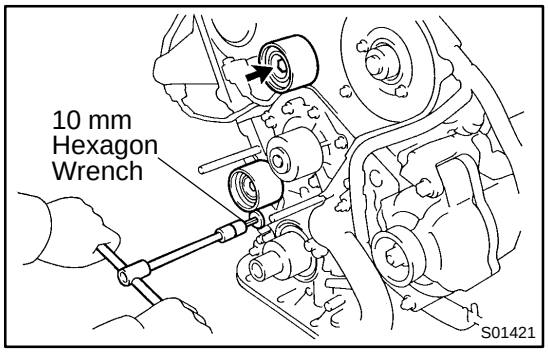

2. INSTALL NO. 1 IDLER PULLEY

(a) Apply adhesive 2 or 3 threads of the pivot bolt.

Adhesive:

Part No. 08833–00080, THREE BOND 1344, LOCTITE 242 or equivalent

(b) Using a 10 mm hexagon wrench, install the plate washer and idler pulley with the pivot bolt.

Torque: 35 N·m (350 kgf·cm, 26 ft·lbf)

(c) Check that the pulley bracket moves smoothly.

3. INSTALL NO. 2 IDLER PULLEY

(a) Install the idler pulley with the bolt.

Torque: 40 N·m (400 kgf·cm, 30 ft·lbf)

(b) Check that the pulley moves smoothly.

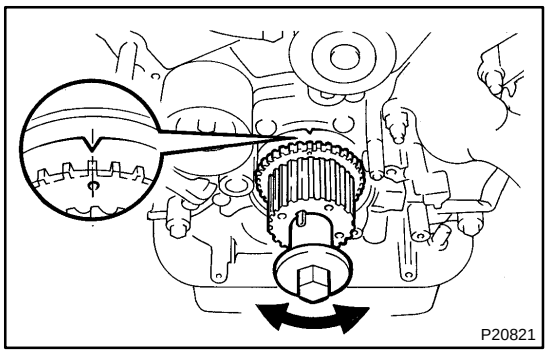

4. TEMPORARILY INSTALL TIMING BELT

NOTICE:

The engine should be cold.

(a) Use the crankshaft pulley bolt to turn the crankshaft and align the timing marks on the crankshaft timing pulley and on the oil pump body.

(b) Remove any oil or water on the crankshaft timing pulley, idler pulley and water pump pulley, and keep them clean.

NOTICE:

Only wipe the pulleys; do not use any cleansing agent.

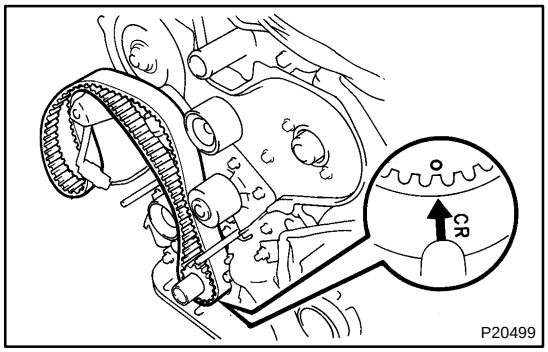

(c) Align the installation mark on the timing belt with the drilled mark of the crankshaft timing pulley.

(d) Install the timing belt on the crankshaft timing pulley, No. 1 idler pulley and water pump pulley.

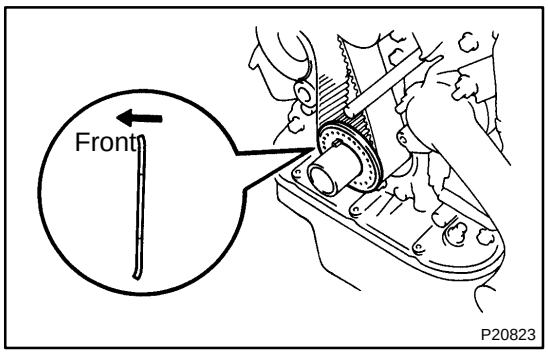

5. INSTALL TIMING BELT GUIDE

Install the guide, facing the cup side outward.

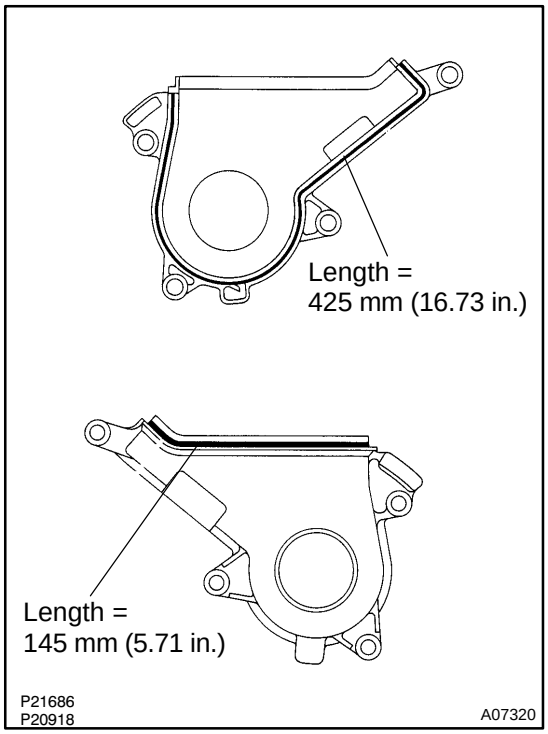

6. INSTALL NO. 1 TIMING BELT COVER AND STARTER WIRE BRACKET

(a) Check that the timing belt cover gaskets have cracks or peeling, etc.

If the gasket does have cracks or peeling, etc., replace it using these steps. peeling, etc., replace them using these steps.

(1) Using a screwdriver and gasket scraper, remove all the old gasket materials.

(2) Thoroughly clean all components to remove all the loose material.

(3) Remove the backing paper from a new gasket and install the gasket evenly to the part of the belt cover shaded back in the illustration.

(b) Install the timing belt cover with the 4 bolts.
Torque: 9 N·m (90 kgf·cm, 80 in.·lbf)

(c) Install the starter wire bracket with the 2 bolts.

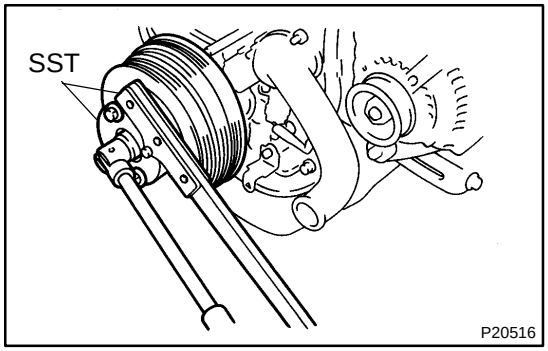

7. INSTALL CRANKSHAFT PULLEY

(a) Align the pulley set key with the key groove of the pulley, and slide it on the pulley.

(b) Using SST, install and torque the bolt.
SST 09213–54015 (90119–08216), 09330–00021
Torque: 295 N·m (2,950 kgf·cm, 217 ft·lbf)

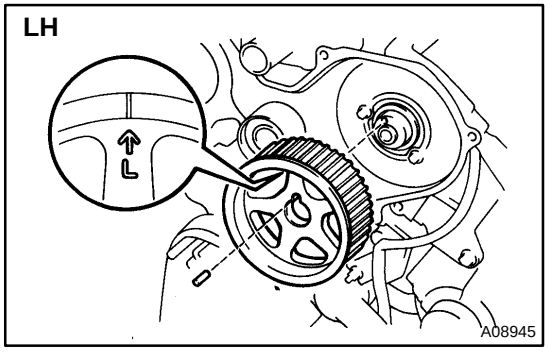

8. INSTALL LH CAMSHAFT TIMING PULLEY

(a) Slide the timing pulley, facing the flange side outward.

(b) Align the knock pin hole of the camshaft with the knock pin groove of the timing pulley as shown.

(c) Install the knock pin.

(d) Using SST, install and torque the bolt.
SST 09960–10010 (09962–01000, 09963–01000)
Torque: 110 N·m (1,100 kgf·cm, 81 ft·lbf)

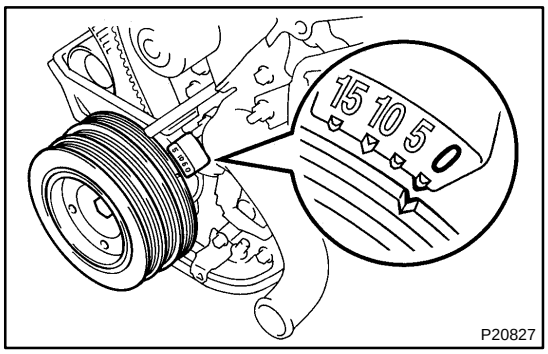

9. SET NO. 1 CYLINDER TO TDC/COMPRESSION

(a) Crankshaft Position:
Turn the crankshaft pulley, and align its groove with the ”0” timing mark of the No. 1 timing belt cover.

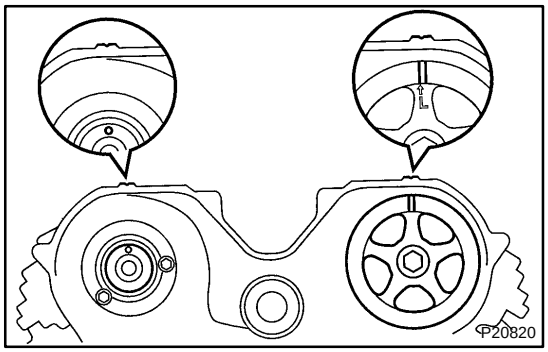

(b) RH Camshaft Position:
Turn the camshaft, and align the knock pin hole of the camshaft with the timing mark of the No. 3 timing belt cover.

(c) LH Camshaft Pulley Position:
Turn the camshaft timing pulley, and align the timing marks of the camshaft timing pulley and No. 3 timing belt cover.

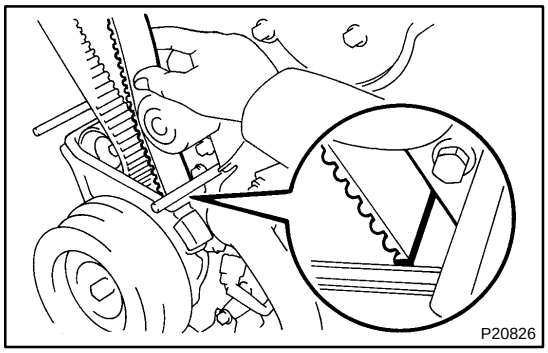

10. INSTALL TIMING BELT TO LH CAMSHAFT TIMING PULLEY

HINT:
When re–using timing belt:
Check that the installation mark on the timing belt matches the end of the No. 1 timing belt cover.
If the installation mark do not align, shift the meshing of the timing belt and crankshaft timing pulley until they align.

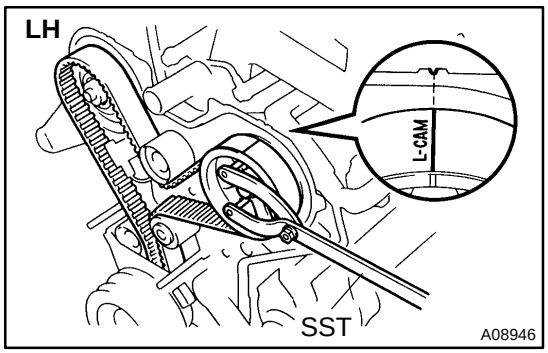

(a) Remove any oil or water on the LH camshaft timing pulley, and keep it clean.

(b) Using SST, slightly turn the LH camshaft timing pulley clockwise. Align the installation mark on the timing belt with the timing mark of the camshaft timing pulley, and hang the timing belt on the LH camshaft timing pulley.
SST 09960–10010 (09962–01000, 09963–01000)

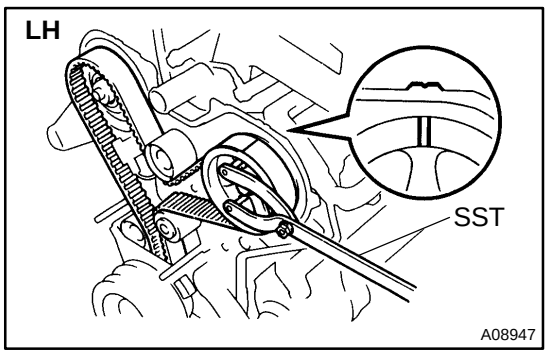

(c) Using SST, align the timing marks of the LH camshaft pulley and No. 3 timing belt cover.
SST 09960–10010 (09962–01000, 09963–01000)

(d) Check that the timing belt has tension between the crankshaft timing and LH camshaft timing pulleys.

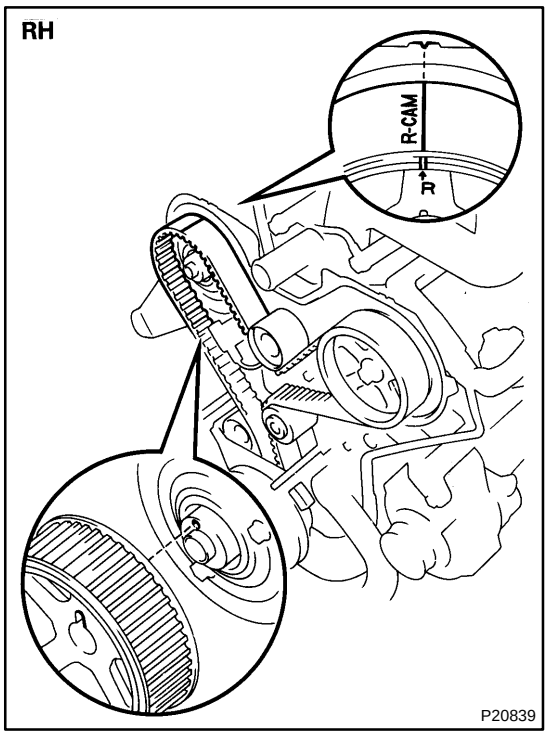

11. INSTALL RH CAMSHAFT TIMING PULLEY AND TIMING BELT

(a) Remove any oil or water on the RH camshaft timing and No. 2 idler pulleys, and keep them clean.

(b) Align the installation mark on the timing belt with the timing mark of the RH camshaft timing pulley as shown.

(c) Hang the timing belt on the RH camshaft timing pulley.

(d) Align the timing marks of the RH camshaft timing pulley and No. 3 timing belt cover.

(e) Slide the RH camshaft timing pulley on the camshaft.

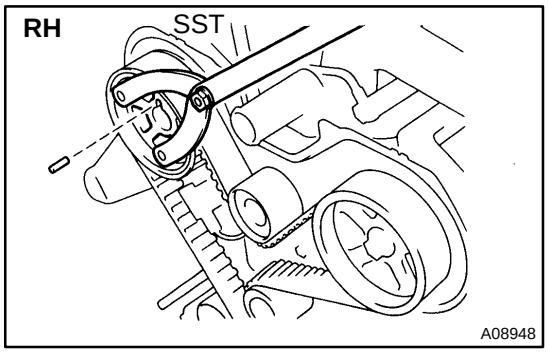

(f) Using SST, align the knock pin hole of the camshaft with knock pin groove marked R of the pulley and install the knock pin.
SST 09960–10010 (09962–01000, 09963–01000)

(g) Using SST, install and torque the bolt.
SST 09960–10010 (09962–01000, 09963–01000)
Torque: 110 N·m (1,100 kgf·cm, 81 ft·lbf)

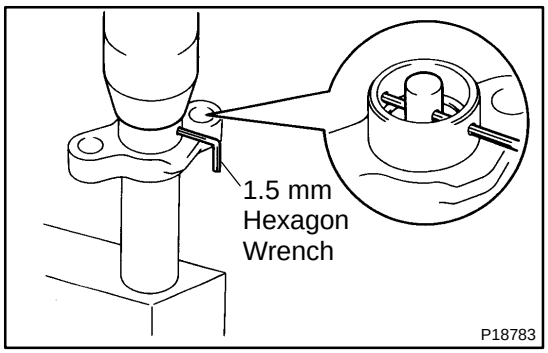

12. SET TIMING BELT TENSIONER

(a) Using a press, slowly press in the push rod using 981 – 9,807 N (100 – 1,000 kgf, 220 – 2,205 lbf) of pressure.

(b) Align the holes of the push rod and housing, pass a 1.5 mm hexagon wrench through the holes to keep the setting position of the push rod.

(c) Release the press.

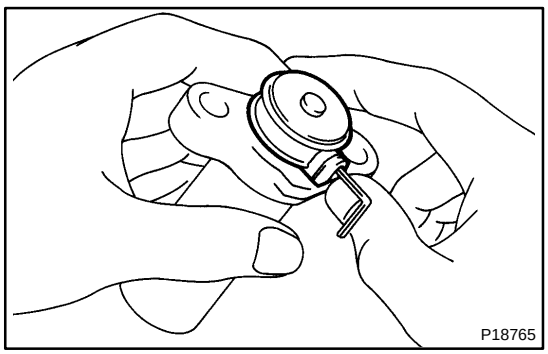

(d) Install the dust boot to the tensioner.

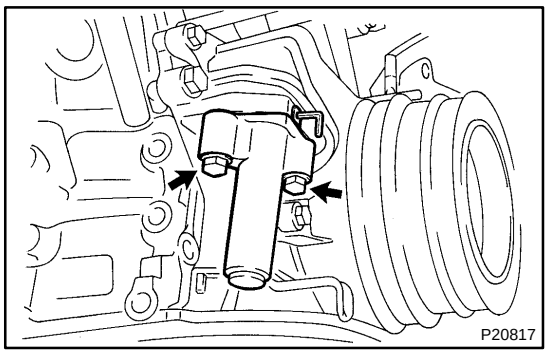

13. INSTALL TIMING BELT TENSIONER

(a) Install the tensioner with the 2 bolts.
Torque: 27 N·m (275 kgf·cm, 20 ft·lbf)

(b) Remove the 1.5 mm hexagon wrench from the tensioner.

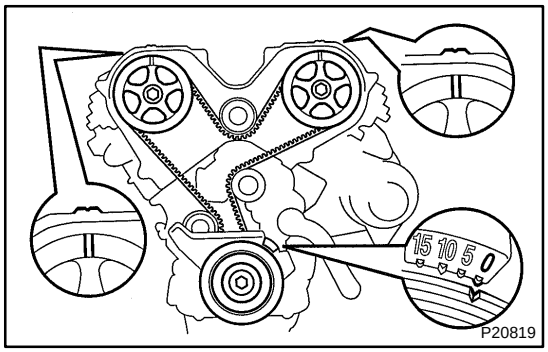

14. CHECK VALVE TIMING

(a) Turn the crankshaft pulley 2 revolutions from TDC to TDC.

NOTICE:

Always turn the crankshaft clockwise.

(b) Check that each pulley aligns with the timing marks as shown in the illustration.

If the marks do not align, remove the timing belt and reinstall it.

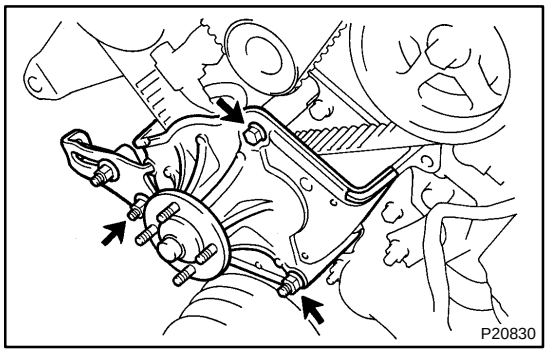

15. INSTALL FAN BRACKET

(a) Install the fan bracket with the bolt and nut.

(b) Install the PS pump adjusting strut with the nut.

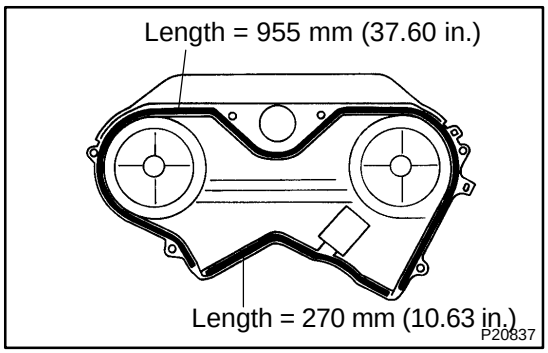

16. INSTALL NO. 2 TIMING BELT COVER

(a) Check that the timing belt cover gasket has no cracks or peeling, etc.

If the gasket does have cracks or peeling, etc., replace it using these steps.

(1) Using a screwdriver and gasket scrapers, remove all the old gasket materials.

(2) Thoroughly clean all components to remove all the loose material.

(3) Remove the backing paper from a new gasket and install the gasket evenly to the part of the belt cover shaded black in the illustration.

(b) Install the belt cover with the 6 bolts.
Torque: 9 N·m (90 kgf·cm, 80 in.·lbf)

(c) Connect the 4 high–tension cord clamps to the No.2 timing belt cover.

(d) Connect the camshaft position sensor connector to the timing belt cover.

17. INSTALL A/C COMPRESSOR BRACKET
Torque: 47 N·m (479 kgf·cm, 35 ft·lbf)

18. TEMPORARILY INSTALL FAN WITH FLUID COUPLING AND FAN PULLEYS

19. INSTALL NO. 2 FAN SHROUD

20. INSTALL AND ADJUST DRIVE BELT FOR GENERATOR (See page CH–1)

21. TIGHTEN FAN WITH FLUID COUPLING AND FAN PULLEYS

Torque: 5.4 N·m (54 kgf·cm, 48 in.·lbf)

22. CONNECT A/C COMPRESSOR TO ENGINE

(a) Install the A/C compressor with the 4 bolts.

Torque: 25 N·m (250 kgf·cm, 18 ft·lbf)

(b) Install and adjust the drive belt (See page AC–18).

(c) Connect the A/C compressor connector.

23. CONNECT PS PUMP TO ENGINE

(a) Temporarily install the PS pump with the bolt and nut.

(b) Install and adjust the drive belt (See page SR–40).

(c) Tighten the bolt and nut.

Torque: 43 N·m (440 kgf·cm, 31 ft·lbf)

(d) Install the PS pressure tube clamp with the bolt.

(e) Connect the 2 PS air hoses to the air intake chamber and resonator.

24. CONNECT UPPER RADIATOR HOSE

25. FILL ENGINE WITH COOLANT

26. START ENGINE CHECK FOR LEAKS

27. INSTALL ENGINE UNDER COVER

28. ROAD TEST VEHICLE

Check for abnormal noise, shock, slippage, correct shift points and smooth operation.

29. RECHECK ENGINE COOLANT LEVEL

CYLINDER HEAD

COMPONENTS

EM1LF–02

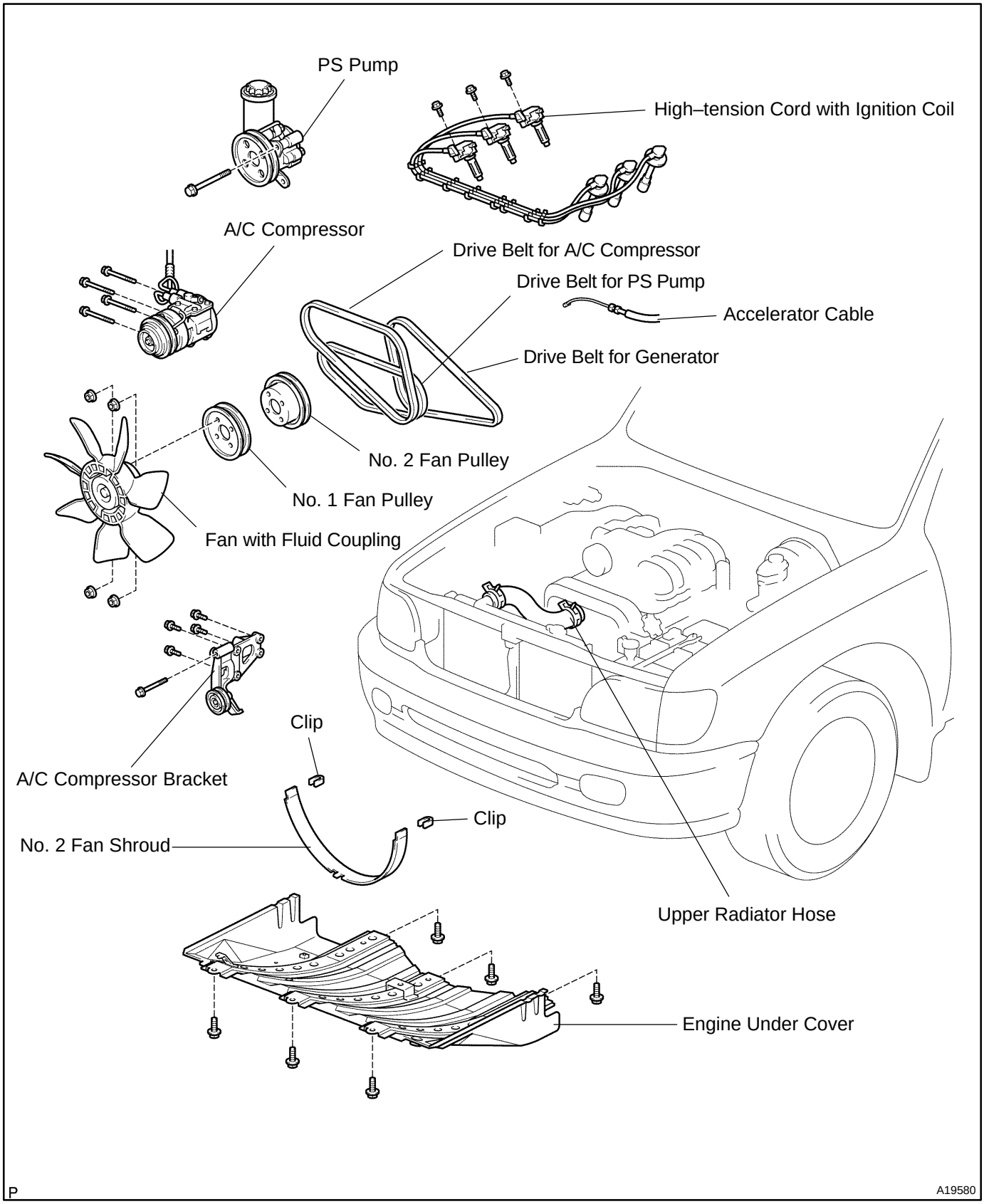

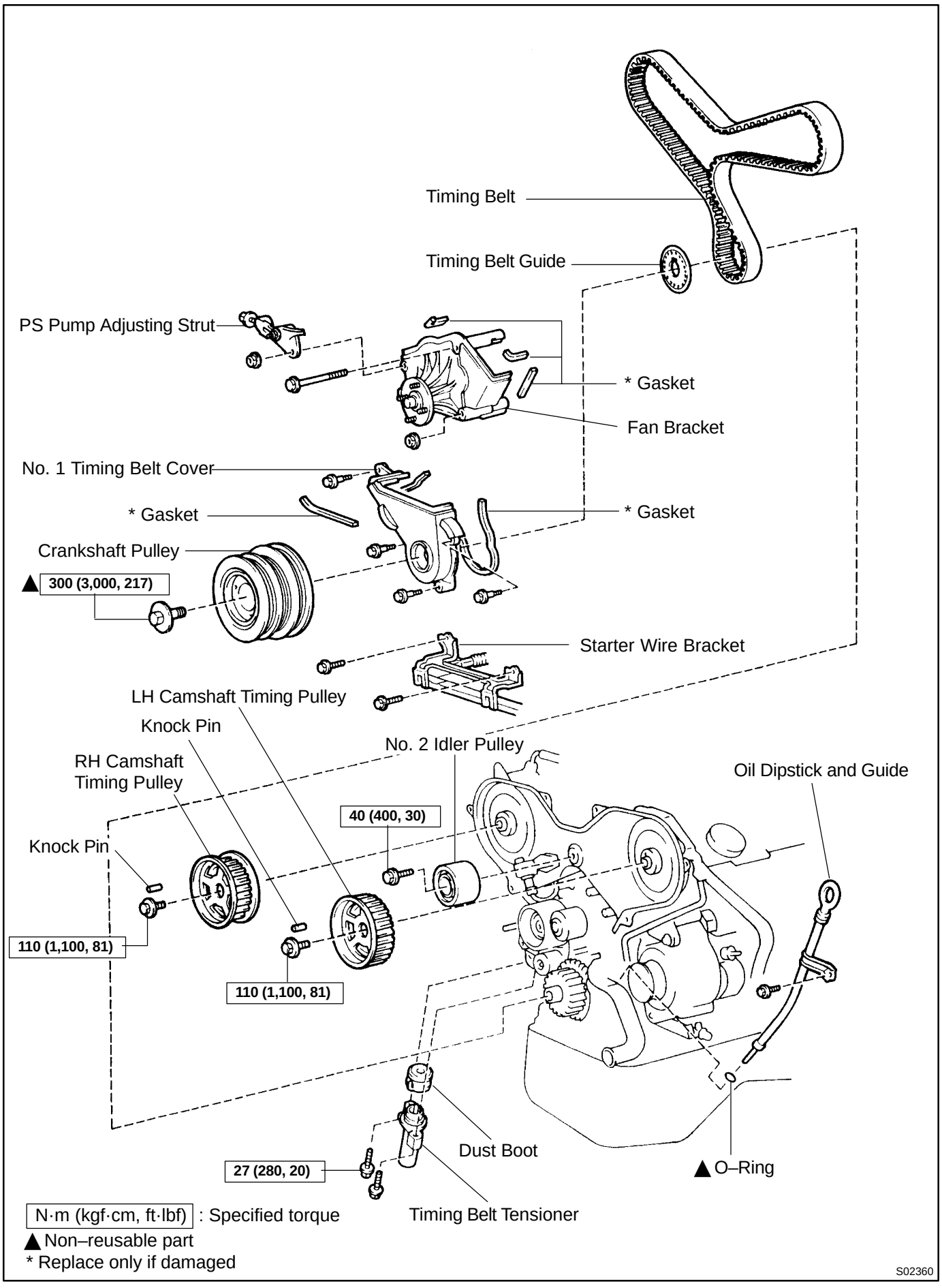
Timing Belt
Timing Belt Guide
PS Pump Adjusting Strut
* Gasket
Fan Bracket
No. 1 Timing Belt Cover
* Gasket
* Gasket
Crankshaft Pulley
▲ 300 (3,000, 217)
Starter Wire Bracket
LH Camshaft Timing Pulley
Knock Pin
No. 2 Idler Pulley
RH Camshaft Timing Pulley
Oil Dipstick and Guide
40 (400, 30)
Knock Pin
110 (1,100, 81)
110 (1,100, 81)
Dust Boot
▲ O–Ring
27 (280, 20)
Timing Belt Tensioner
N·m (kgf·cm, ft·lbf) : Specified torque
▲ Non–reusable part
* Replace only if damaged
S02360

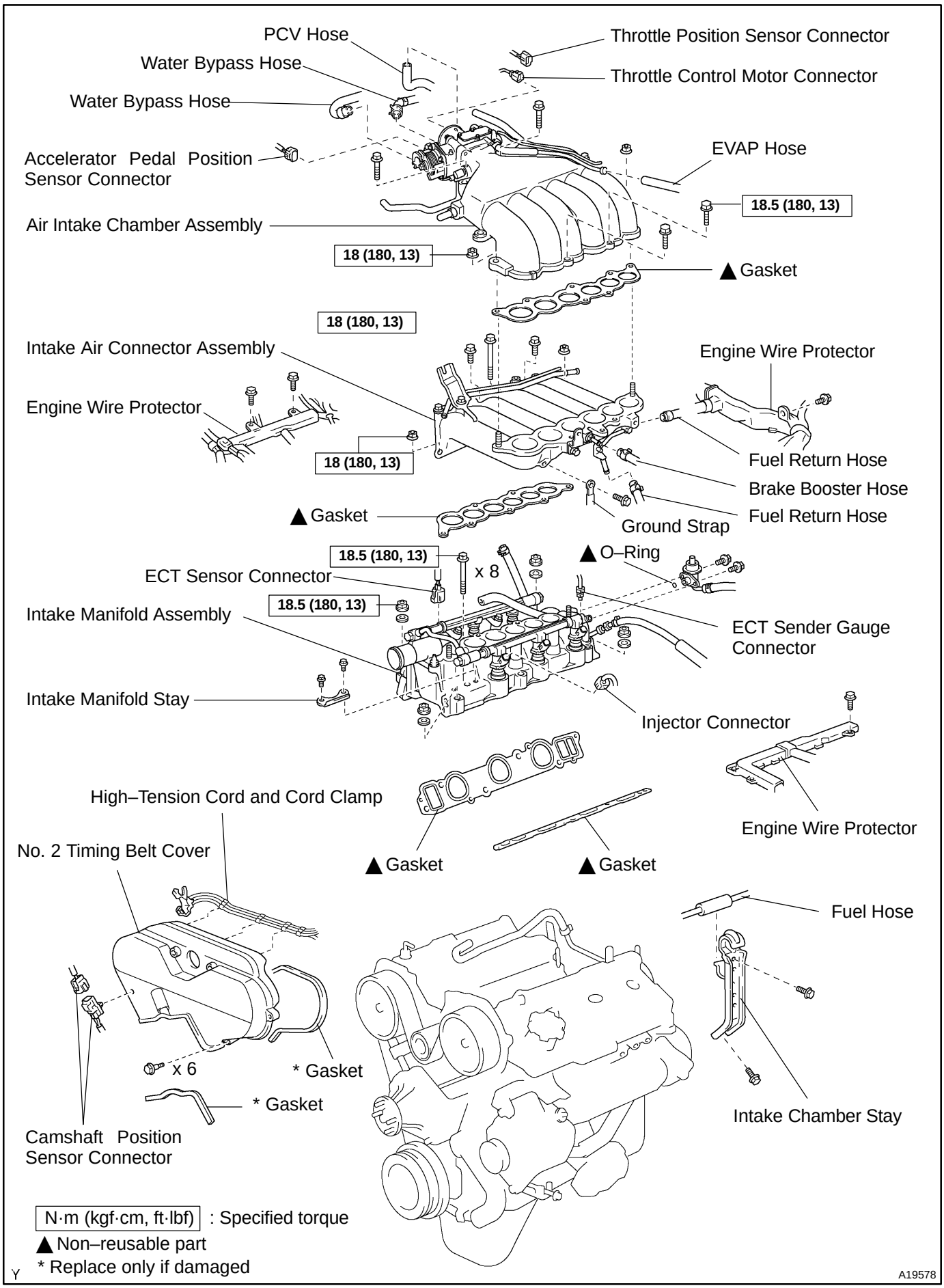
PCV Hose
Water Bypass Hose
Water Bypass Hose
Throttle Position Sensor Connector
Throttle Control Motor Connector
Accelerator Pedal Position Sensor Connector
EVAP Hose
18.5 (180, 13)
Air Intake Chamber Assembly
18 (180, 13)
▲ Gasket
18 (180, 13)
Intake Air Connector Assembly
Engine Wire Protector
Engine Wire Protector
18 (180, 13)
Fuel Return Hose
Brake Booster Hose
▲ Gasket
Ground Strap
Fuel Return Hose
18.5 (180, 13)
x 8
▲ O–Ring
ECT Sensor Connector
18.5 (180, 13)
Intake Manifold Assembly
ECT Sender Gauge Connector
Intake Manifold Stay
Injector Connector
High–Tension Cord and Cord Clamp
Engine Wire Protector
No. 2 Timing Belt Cover
▲ Gasket
▲ Gasket
Fuel Hose
x 6
* Gasket
* Gasket
Intake Chamber Stay
Camshaft Position Sensor Connector
N·m (kgf·cm, ft·lbf) : Specified torque
▲ Non–reusable part
* Replace only if damaged
A19578

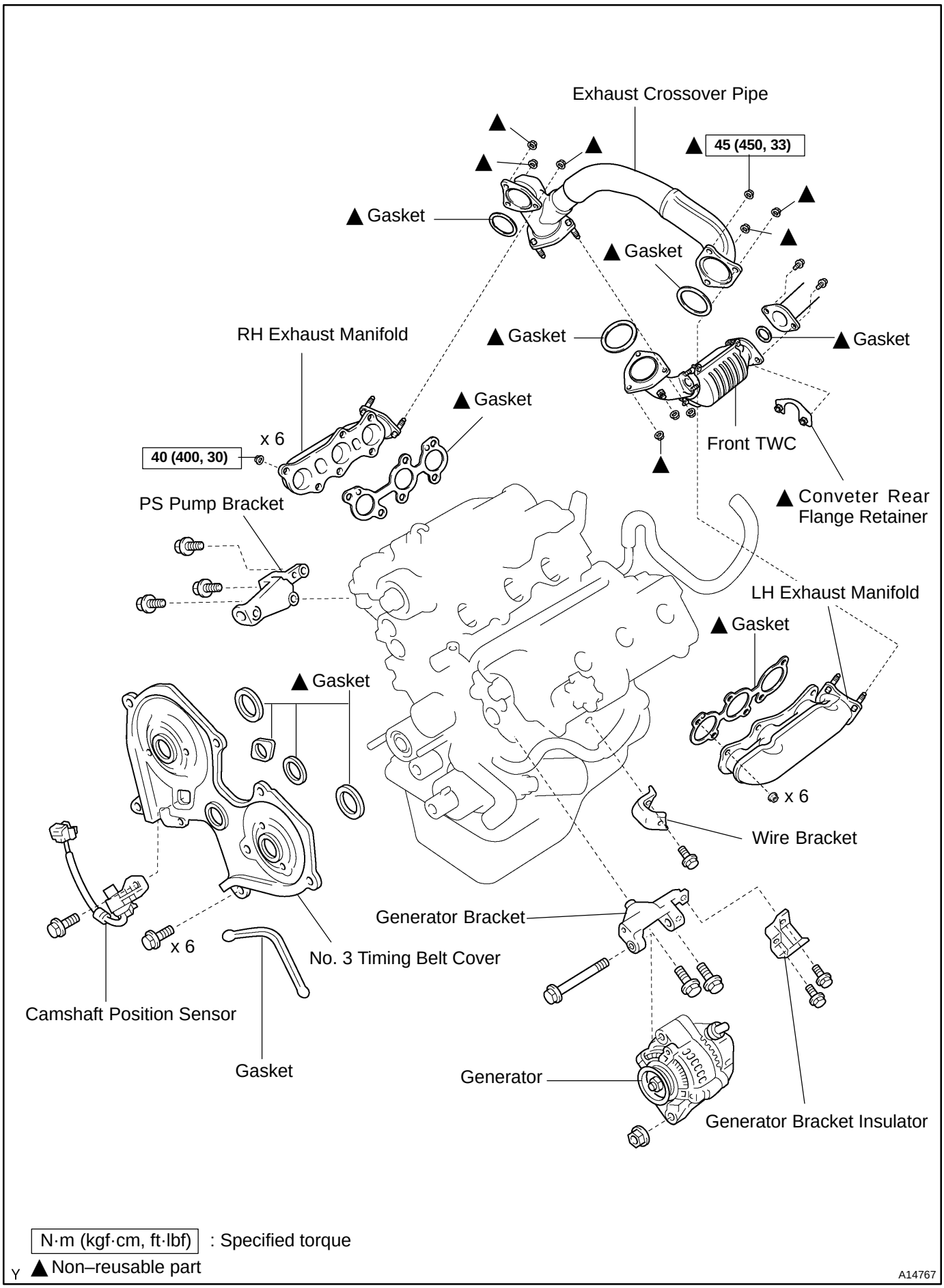
Exhaust Crossover Pipe
45 (450, 33)
Gasket
Gasket
RH Exhaust Manifold
Gasket
Gasket
Gasket
x 6
40 (400, 30)
Front TWC
Conveter Rear Flange Retainer
PS Pump Bracket
LH Exhaust Manifold
Gasket
Gasket
x 6
Wire Bracket
Generator Bracket
x 6
No. 3 Timing Belt Cover
Camshaft Position Sensor
Gasket
Generator
Generator Bracket Insulator
N·m (kgf·cm, ft·lbf) : Specified torque
Non–reusable part
A14767

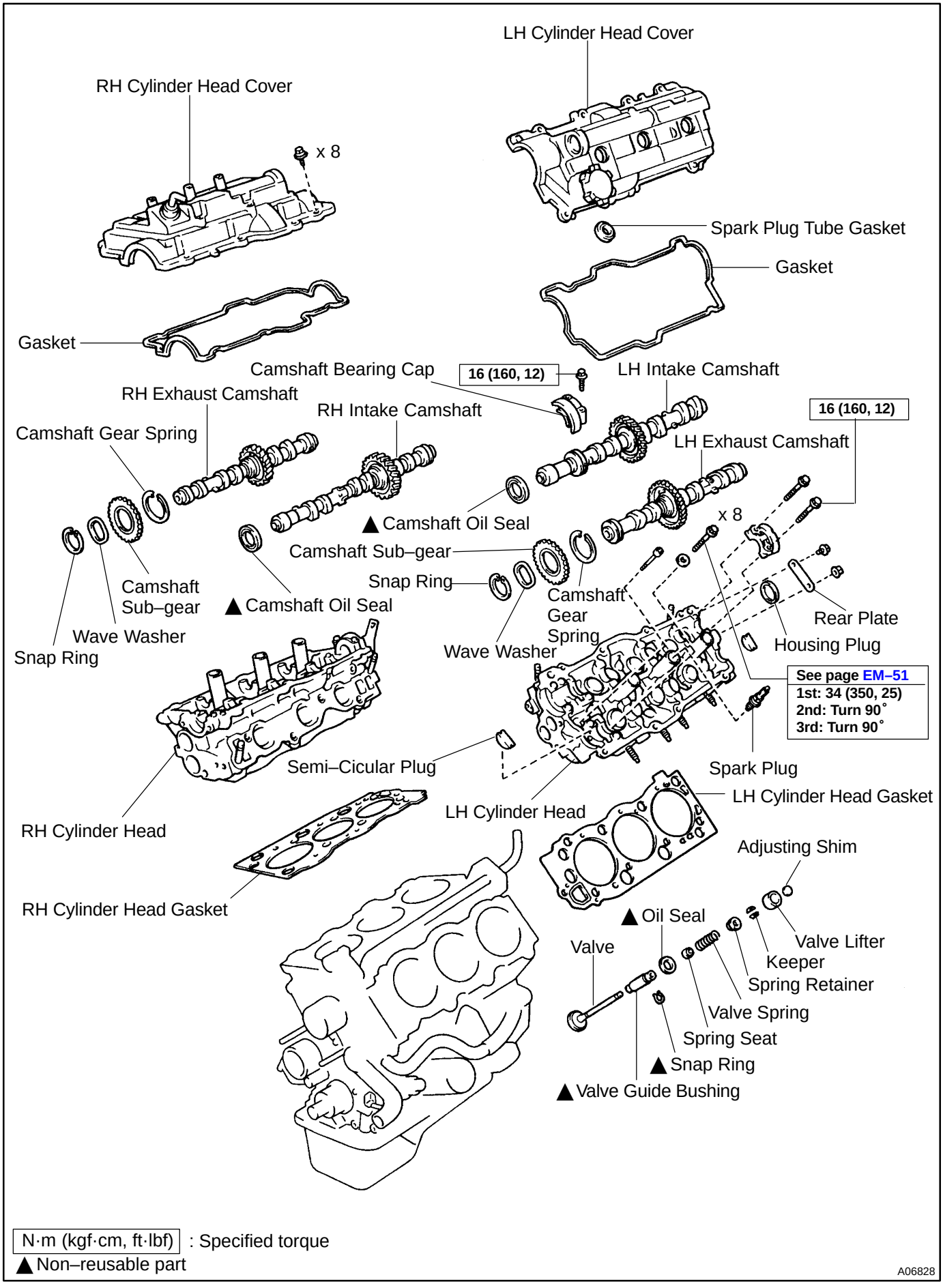

N·m (kgf·cm, ft·lbf) : Specified torque
▲ Non–reusable part

A06828

EM1V1–02

REMOVAL

1. **REMOVE ENGINE UNDER COVER**
2. **DRAIN ENGINE COOLANT**
3. **REMOVE FRONT EXHAUST PIPE (See page EM–103)**
4. **REMOVE MAF METER, RESONATOR AND AIR CLEANER ASSEMBLY**
5. **REMOVE HIGH–TENSION CORDS WITH IGNITION COILS AND SPARK PLUGS (See page IG–7)**
6. **DISCONNECT ACCELERATOR CABLE**
7. **DISCONNECT HEATER HOSE AND UPPER RADIATOR HOSE**
8. **REMOVE GENERATOR**
9. **REMOVE INTAKE CHAMBER STAY**

(a) A/T:
Remove the bolt and oil filler tube.

(b) Remove the 2 bolts and intake chamber stay.

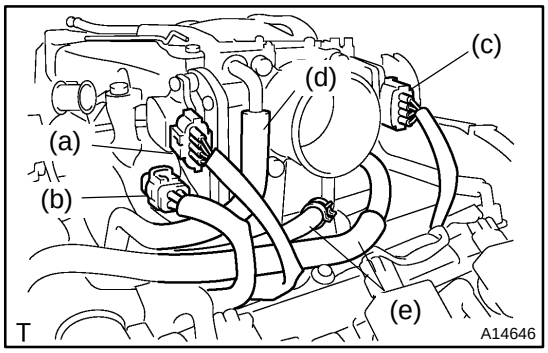

10. **REMOVE AIR INTAKE CHAMBER ASSEMBLY**

(a) Disconnect the throttle position sensor connector.

(b) Disconnect the throttle control motor connector.

(c) Disconnect the accelerator pedal position sensor connector.

(d) Disconnect the air hose.

(e) Disconnect the 2 water bypass hoses.

(f) Remove the 3 bolts, 2 nuts, the air intake chamber assembly and gasket.

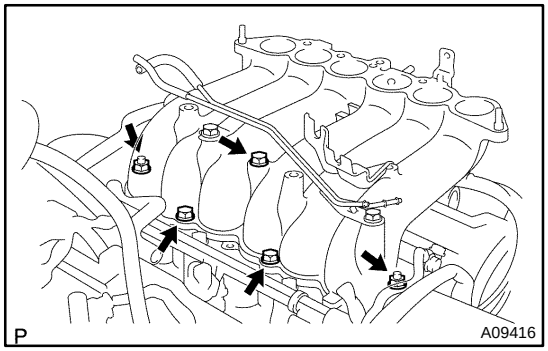

11. **REMOVE INTAKE AIR CONNECTOR**

(a) Remove the bolt holding the engine wire to the intake air connector.

(b) Disconnect the 2 fuel return hoses from the intake air connector.

(c) Disconnect the brake booster vacuum hose from the intake air connector.

(d) Disconnect vacuum sensing hose from the fuel pressure regulator.

(e) Remove the bolt holding the ground strap to the intake air connector.

(f) Remove the 3 bolts, 2 nuts, intake air connector and gasket.

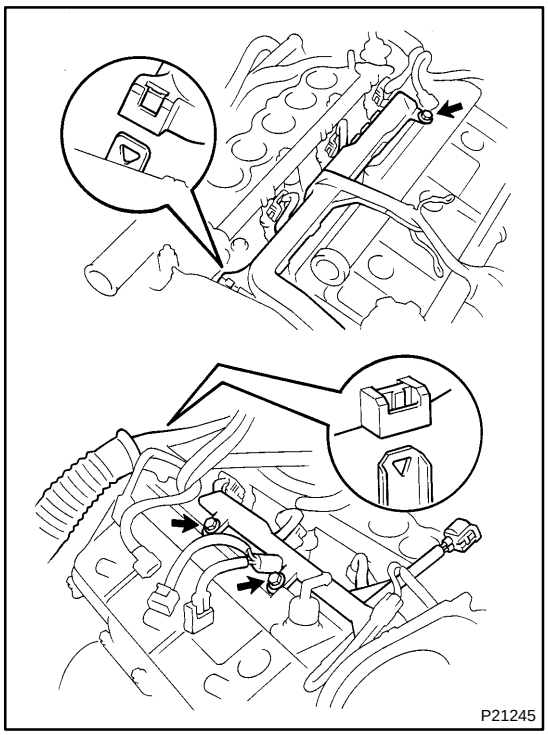

12. DISCONNECT ENGINE WIRE

(a) Disconnect the oil pressure sensor connector.
(b) Disconnect the crankshaft position sensor connector.
(c) Disconnect the 6 Injector connectors.
(d) Disconnect the ECT sender gauge connector.
(e) Disconnect the ECT sensor connector.
(f) Disconnect the knock sensor connector.
(g) Disconnect the camshaft position sensor connector.
(h) Disconnect the 3 engine wire clamps.
(i) Remove the 3 bolts, and disconnect the engine wire from the cylinder head.

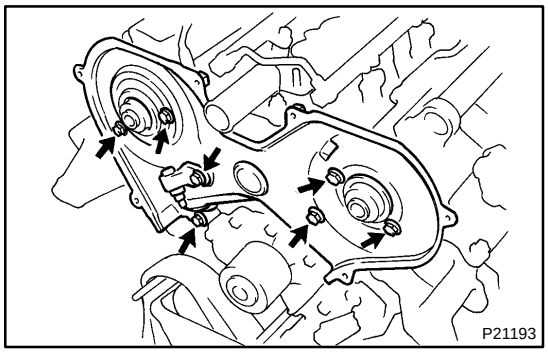

13. REMOVE CAMSHAFT POSITION SENSOR

14. REMOVE NO. 3 TIMING BELT COVER

Remove the 6 bolts and timing belt cover.

15. REMOVE FUEL PRESSURE REGULATOR

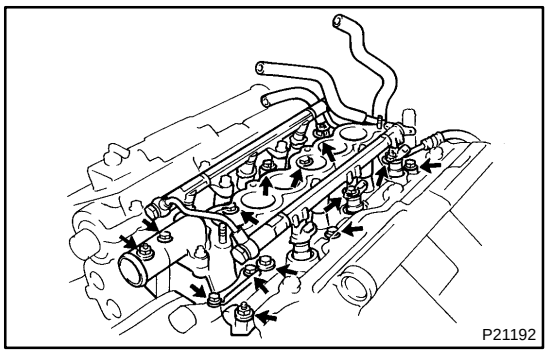

16. REMOVE INTAKE MANIFOLD ASSEMBLY

(a) Disconnect the fuel inlet hose.
(b) Remove the 2 bolts and intake manifold stay.
(c) Remove the 8 bolts, 4 nuts, 4 plate washers, the intake manifold, delivery pipes and injectors assembly and 2 gaskets.

17. REMOVE PS PUMP BRACKET

18. REMOVE OIL DIPSTICK AND GUIDE

(a) Remove the 2 bolts holding the dipstick guide to the generator bracket.
(b) Pull out the dipstick guide together with the dipstick from the oil pan.
(c) Remove the O–ring from the dipstick guide.

19. REMOVE GENERATOR BRACKET

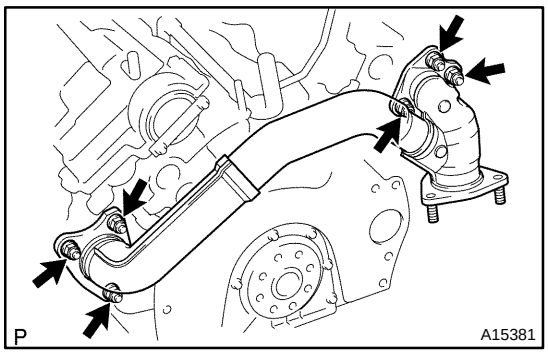

20. REMOVE EXHAUST CROSSOVER PIPE

Remove the 6 nuts, crossover pipe and 2 gaskets.

21. REMOVE LH AND RH EXHAUST MANIFOLDS

(a) Remove the 6 nuts, exhaust crossover pipe and 2 gaskets.

(b) Remove the 12 nuts, LH, RH exhaust manifolds and 2 gaskets.

22. REMOVE CYLINDER HEAD COVERS

Remove the 8 bolts, seal washers, cylinder head cover and gasket. Remove the 2 cylinder head covers.

23. REMOVE SEMI–CIRCULAR PLUGS

24. REMOVE CAMSHAFTS OF RH CYLINDER HEAD

NOTICE:

Since the thrust clearance of the camshaft is small, the camshaft must be held level while it is being removed. If the camshaft is not kept level, the portion of the cylinder head receiving the shaft thrust may crack or be damaged, causing the camshaft to seize or break. To avoid this, these steps should be carried out.

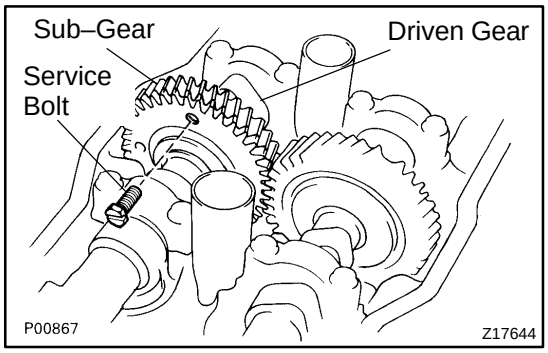

(a) Remove the exhaust camshaft of the RH cylinder head.

(1) Boring the service bolt hole of the driven sub–gear upward by turning the hexagon wrench head portion of the exhaust camshaft with a wrench.

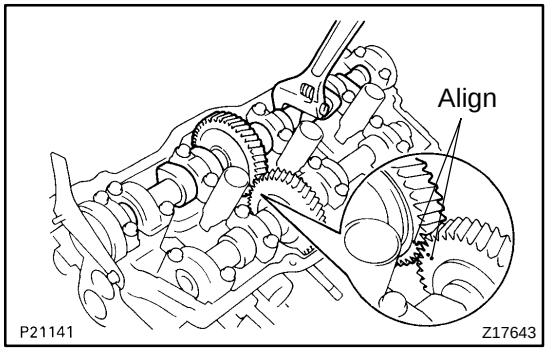

(2) Align the timing marks (2 dot marks) of the camshaft drive and driven gears by turning the hexagon wrench head portion of the exhaust camshaft with a wrench..

(3) Secure the exhaust camshaft sub–gear to the main gear with a service bolt.

Recommended service bolt:

Thread diameter	6 mm
Thread pitch	1.0 mm
Bolt length	16 – 20 mm (0.63 in. – 0.79 in.)

HINT:

When removing the camshaft, mark certain that the torsional spring force of the sub–gear has been eliminated by the above operation.

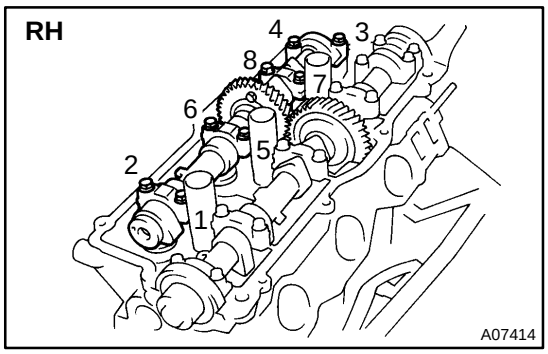

(4) Uniformly loosen and remove the 8 bearing cap bolts, in several passes, in the sequence shown.
(5) Remove the 4 bearing caps and exhaust camshaft.

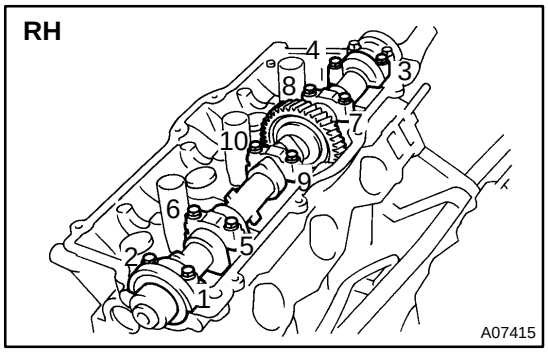

(b) Remove the intake camshaft of the RH cylinder head.
(1) Uniformly loosen and remove the 10 bearing cap bolts, in several passes, in the sequence shown.
(2) Remove the 5 bearing caps, oil seal and intake camshaft.

25. REMOVE CAMSHAFTS OF LH CYLINDER HEAD

NOTICE:

Since the thrust clearance of the camshaft is small, the camshaft must be held level while it is being removed. If the camshaft is not kept level, the portion of the cylinder head receiving the shaft thrust may crack or be damaged, causing the camshaft to seize or break. To avoid this, these steps should be carried out.

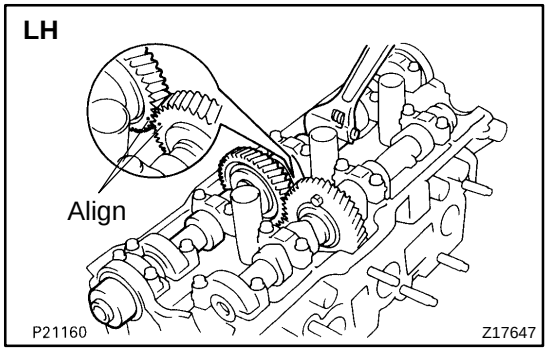

(a) Remove the exhaust camshaft of the LH cylinder head.
(1) Align the timing marks (1 dot mark) of the camshaft drive and driven gears by turning the hexagon wrench head portion of the exhaust camshaft with a wrench.

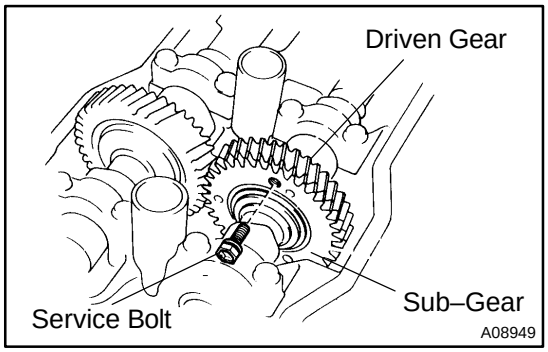

(2) Secure the exhaust camshaft sub–gear to the main gear with a service bolt.

Recommended service bolt:

Thread diameter	6 mm
Thread pitch	1.0 mm
Bolt length	16 – 20 mm (0.63 in. – 0.79 in.)

HINT:
When removing the camshaft, make sure that the torsional spring force of the sub–gear has been eliminated by the above operation.

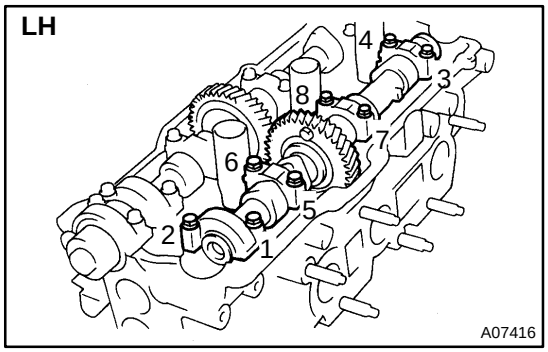

(3) Uniformly loosen and remove the 8 bearing cap bolts, in several passes, in the sequence shown.
(4) Remove the 4 bearing caps and exhaust camshaft.

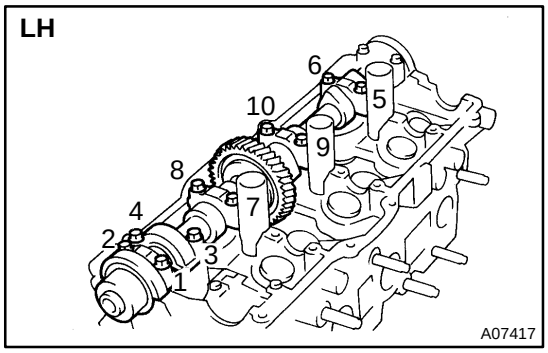

(b) Remove the intake camshaft of the LH cylinder head.
(1) Uniformly loosen and remove the 10 bearing cap bolts, in several passes, in the sequence shown.
(2) Remove the 5 bearing caps, oil seal and intake camshaft.

HINT:
▲ Arrange the camshafts in the correct order.
▲ Arrange the bearing caps in the correct order.

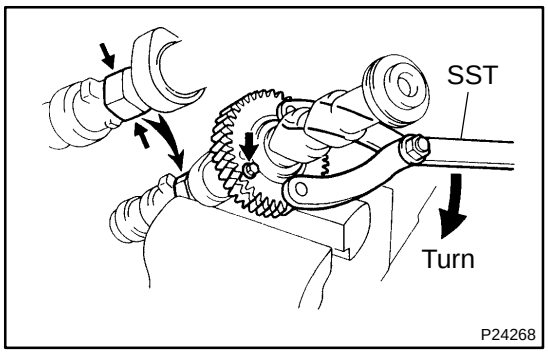

26. DISASSEMBLE EXHAUST CAMSHAFTS

(a) Mount the hexagonal wrench head portion of the camshaft in a vise.

NOTICE:
Be careful not to damage the camshaft.

(b) Using SST, turn the sub–gear clockwise, and remove the service bolt.
SST 09960–10010 (09962–01000, 09963–00600)

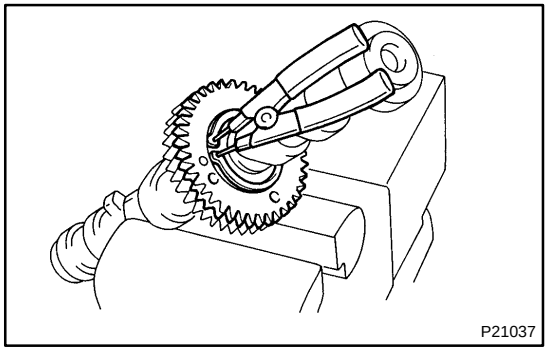

(c) Using snap ring pliers, remove the snap ring.
(d) Remove the wave washer, camshaft sub–gear and gear spring.

HINT:
Arrange the camshaft sub–gears and gear springs (RH and LH sides).

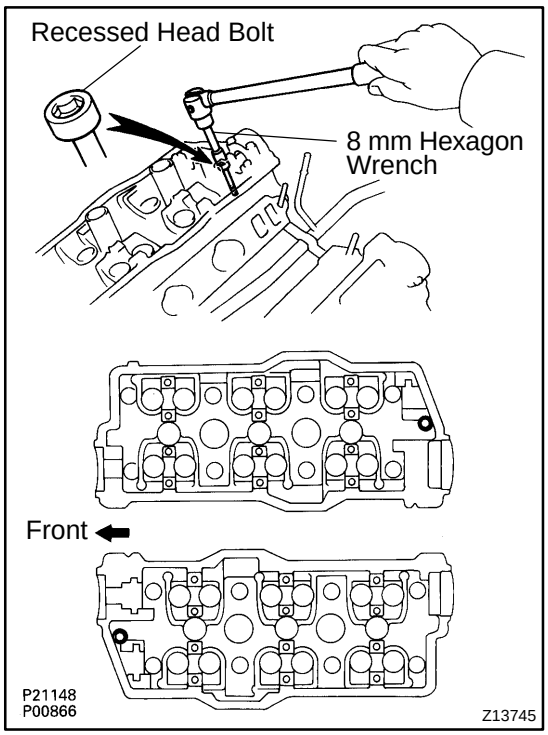

27. REMOVE CYLINDER HEADS

(a) Remove the bolt and disconnect the ground strap.

(b) Using an 8 mm hexagon wrench, remove the cylinder head (recessed head) bolt on each cylinder head, then repeat for the other side as shown.

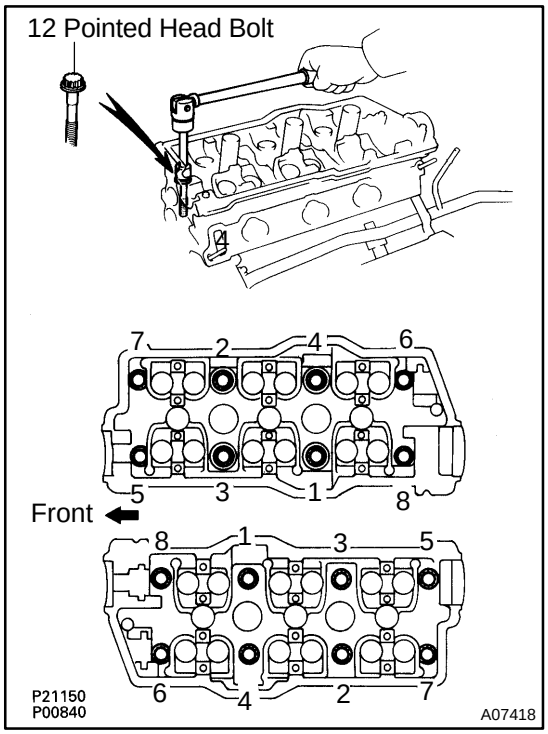

(c) Uniformly loosen and remove the 8 cylinder head (12 pointed head) bolts on each cylinder head, in several passes, in the sequence shown, then repeat for the other side as shown. Remove the 16 cylinder head bolts and plate washers.

NOTICE:

Head warpage or cracking could result from removing bolts in incorrect order.

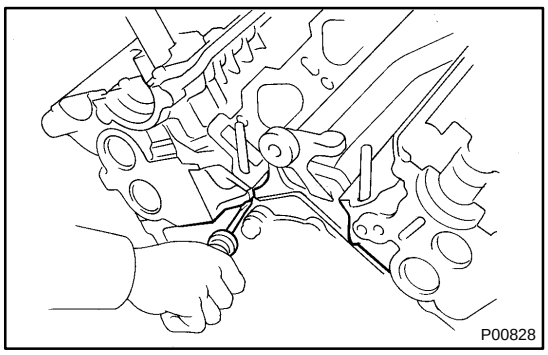

(d) Lift the cylinder head from the dowels on the cylinder block and place the 2 cylinder heads on wooden blocks on a bench.

HINT:

▲ If the cylinder head is difficult to lift off, pry between the cylinder head and cylinder block with a screwdriver.

▲ Arrange the cylinder heads in the correct order.

NOTICE:

Be careful not to damage the contacting surfaces of the cylinder head and cylinder block.

EM06M–02

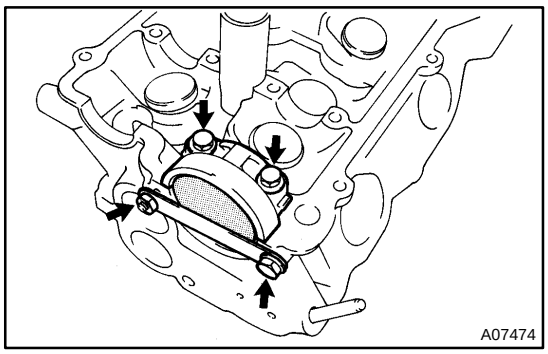

DISASSEMBLY

1. REMOVE CAMSHAFT HOUSING PLUGS

(a) Remove the bolt, nut, cylinder head rear plate and ground strap.

(b) Remove the 2 bolts and camshaft bearing cap.

(c) Remove the housing plug.

2. REMOVE VALVE LIFTERS AND SHIMS

Pull out the valve lifter and shim by hand.

HINT:

Arrange the valve lifters and shims in correct order.

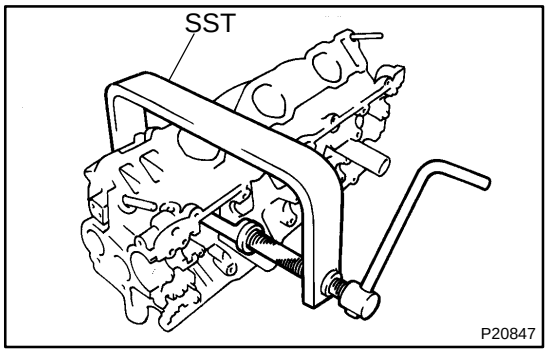

3. REMOVE VALVES

(a) Using SST, compress the valve spring and remove the 2 keepers.

SST 09202–70020 (09202–00010)

(b) Remove the spring retainer, valve spring and valve.

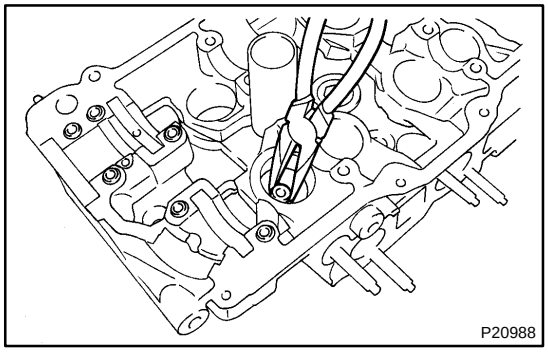

(c) Using needle–nose pliers, remove the oil seal.

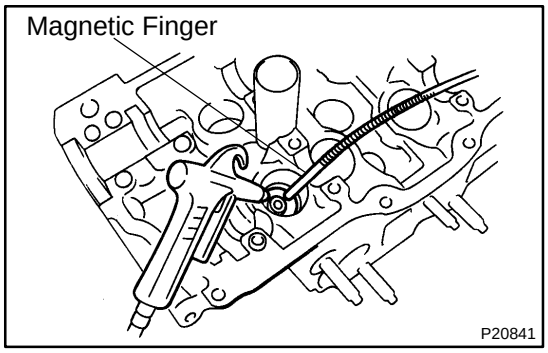

(d) Using compressed air and a magnetic finger, remove the spring seat by blowing air.

HINT:

Arrange the valves, valve springs, spring seats and spring retainers in the correct order.

EM12H–01

INSPECTION

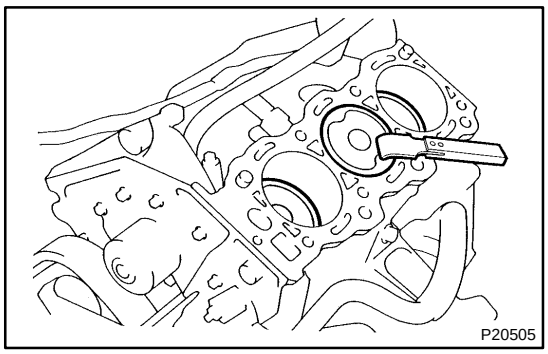

1. CLEAN TOP SURFACES OF PISTONS AND CYLINDER BLOCK

(a) Turn the crankshaft and bring each piston to top dead center (TDC). Using a gasket scraper, remove all the carbon from the piston top surfaces.

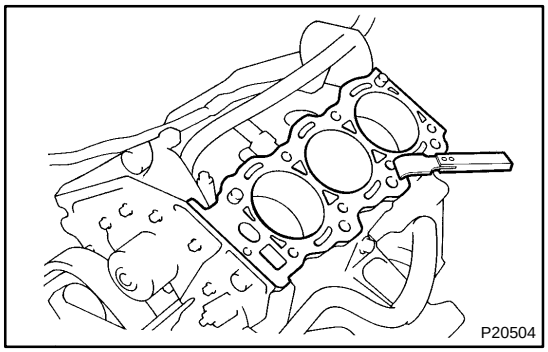

(b) Using a gasket scraper, remove all the gasket material from the surface contacting the cylinder block.

(c) Using compressed air, blow carbon and oil from the bolt holes.

CAUTION:
Protect your eyes when using high pressure compressed air.

2. INSPECT TOP SURFACE OF CYLINDER BLOCK FOR FLATNESS

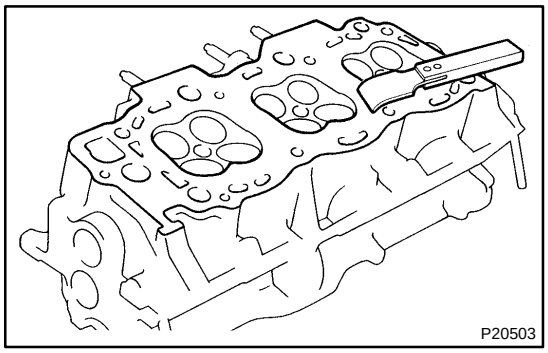

3. CLEAN CYLINDER HEADS

(a) Using a gasket scraper, remove all the gasket material from the surface contacting the cylinder block contact surface.

NOTICE:
Be careful not to scratch the surface contacting the cylinder block.

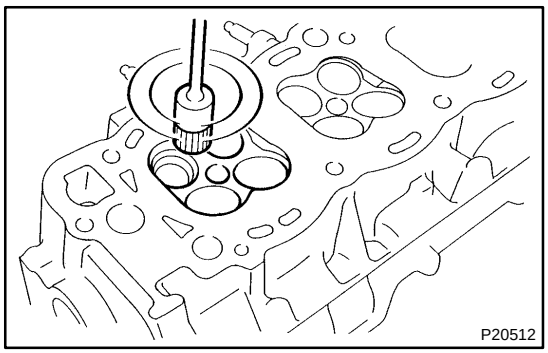

(b) Using a wire brush, remove all the carbon from the combustion chambers.

NOTICE:
Be careful not to scratch the surface contacting the cylinder block.

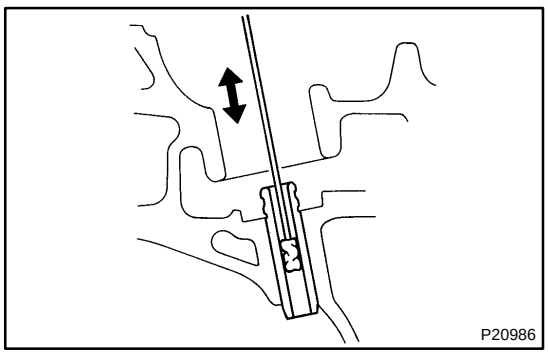

(c) Using a valve guide bushing brush and solvent, clean all the guide bushings.

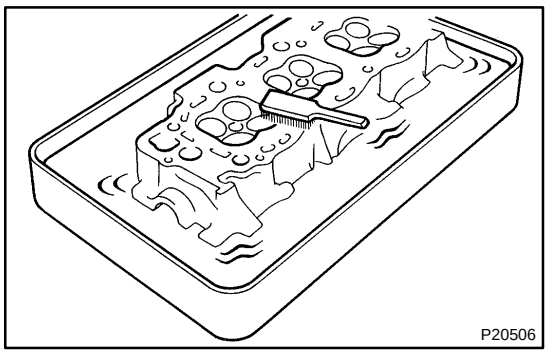

(d) Using a soft brush and solvent, thoroughly clean the cylinder heads.

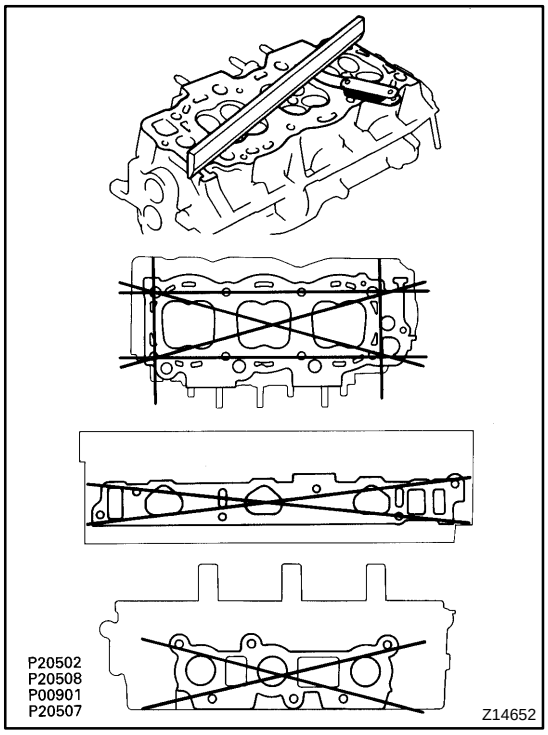

4. INSPECT CYLINDER HEADS

(a) Inspect flatness.

Using a precision straight edge and feeler gauge, measure the surfaces contacting the cylinder block and manifolds for warpage.

Maximum warpage: 0.10 mm (0.0039 in.)

If warpage is greater than maximum, replace the cylinder head.

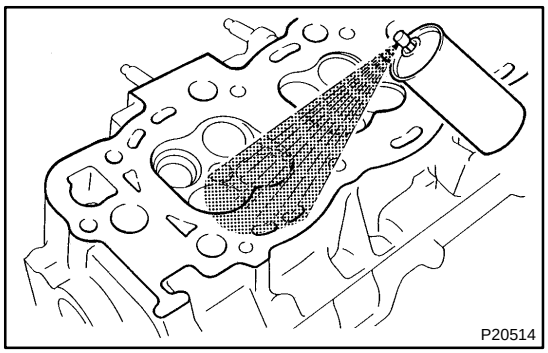

(b) Inspect for cracks.

Using a dye penetrate, check the combustion chamber, intake ports, exhaust ports and cylinder block surface for cracks.

If cracked, replace the cylinder head.

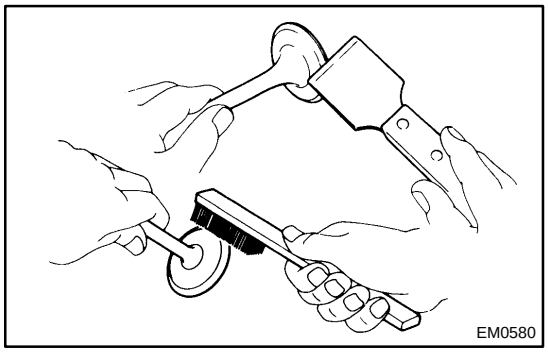

5. CLEAN VALVES

(a) Using a gasket scraper, chip off any carbon from the valve head.

(b) Using a wire brush, thoroughly clean the valve.

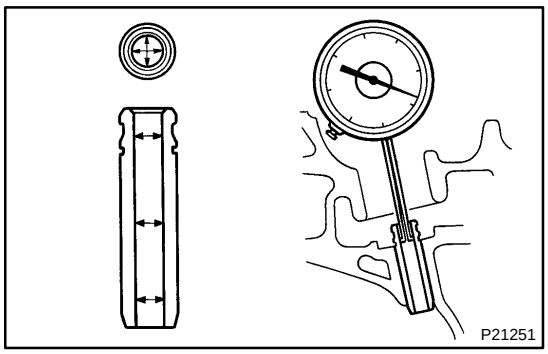

6. INSPECT VALVE STEMS AND GUIDE BUSHINGS

(a) Using a caliper gauge, measure the inside diameter of the guide bushing.

Bushing inside diameter:
6.010 – 6.030 mm (0.2366 – 0.2374 in.)

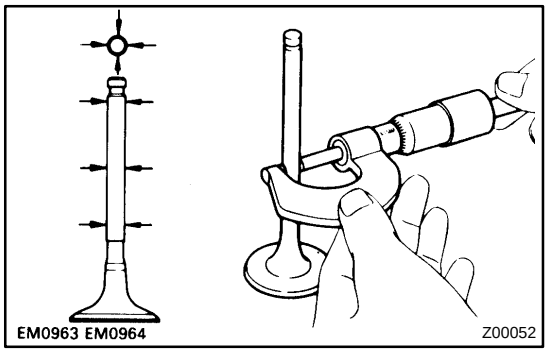

(b) Using a micrometer, measure the diameter of the valve stem.

Valve stem diameter:

Intake	5.970 – 5.985 mm (0.2350 – 0.2356 in.)
Exhaust	5.965 – 5.980 mm (0.2348 – 0.2354 in.)

(c) Subtract the valve stem diameter measurement from the guide bushing inside diameter measurement.

Oil clearance:

Intake	STD	0.025 – 0.060 mm (0.0010 – 0.0024 in.)
	Maximum	0.08 mm (0.0031 in.)
Exhaust	STD	0.030 – 0.065 mm (0.0012 – 0.0026 in.)
	Maximum	0.10 mm (0.0039 in.)

If the clearance is greater than maximum, replace the valve and guide bushing (See page EM–47).

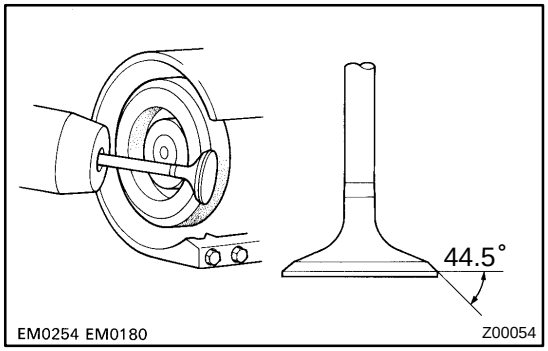

7. INSPECT AND GRIND VALVES

(a) Grind the valve enough to remove peelings and carbon.

(b) Check that the valve is ground to the correct valve face angle.

Valve face angle: 44.5°

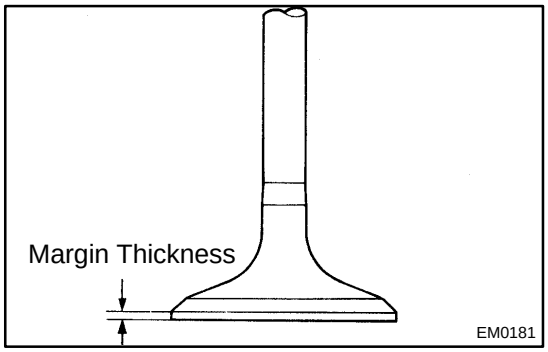

(c) Check the valve head margin thickness.

Standard margin thickness: 1.0 mm (0.039 in.)
Minimum margin thickness: 0.5 mm (0.020 in.)

If the margin thickness is less than minimum, replace the valve.

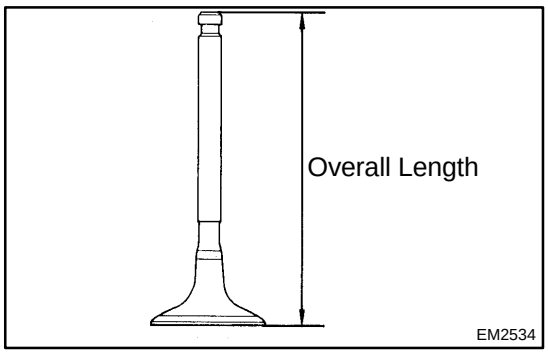

(d) Check the valve overall length.
Overall length:

Intake	STD	95.15 mm (3.7461 in.)
	Minimum	94.60 mm (3.7244 in.)
Exhaust	STD	94.90 mm (3.7362 in.)
	Minimum	94.40 mm (3.7165 in.)

If the overall length is less than minimum, replace the valve.

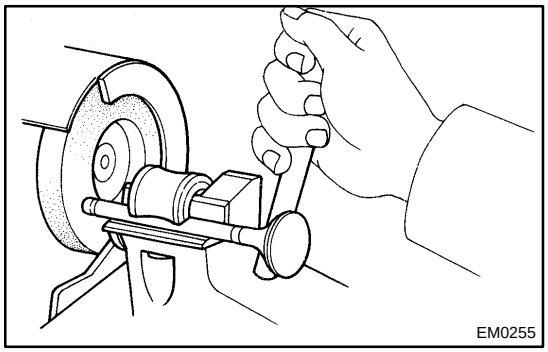

(e) Check the surface of the valve stem tip for wear.
If the valve stem tip is worn, resurface the tip with a grinder or replace the valve.
NOTICE:
Do not grind off more than the minimum.

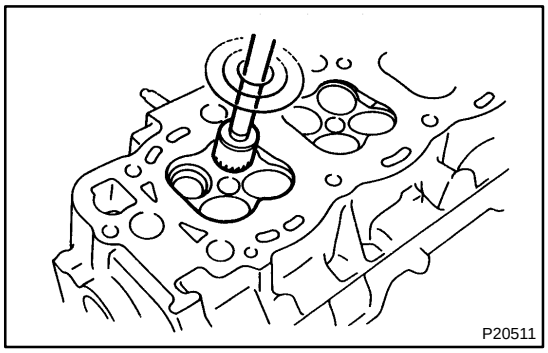

8. INSPECT AND CLEAN VALVE SEATS

(a) Using a 45° carbide cutter, resurface the valve seats. Remove only enough metal to clean the seats.

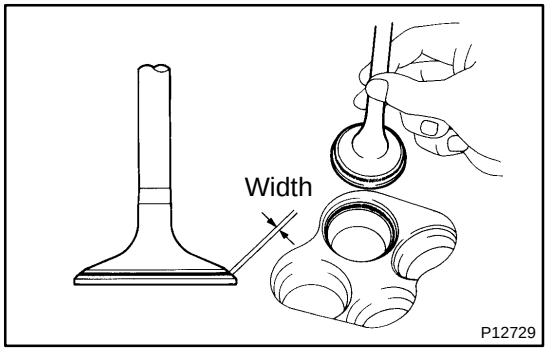

(b) Check the valve seating position.
Apply a thin coat of prussian blue (or white lead) to the valve face. Lightly press the valve against the seat. Do not rotate the valve.

(c) Check the valve face and seat for these:
- ▲ If blue appears 360° around the face, the valve is concentric. If not, replace the valve.
- ▲ If blue appears 360° around the valve seat, the guide and face are concentric. If not, resurface the seat.
- ▲ Check that the seat contact is in the middle of the valve face with these width.

1.0 – 1.4 mm (0.039 – 0.055 in.)

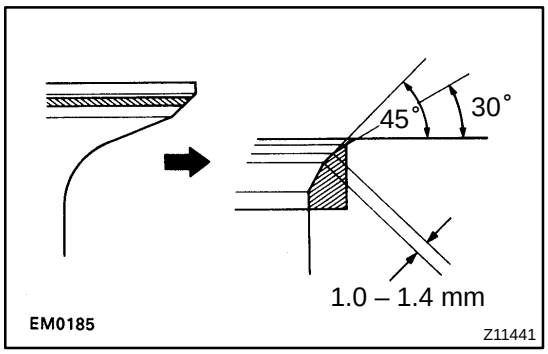

If not, correct the valve seats as follows:

(1) If the seating is too high on the valve face, use 30° and 45° cutters to correct the seat.

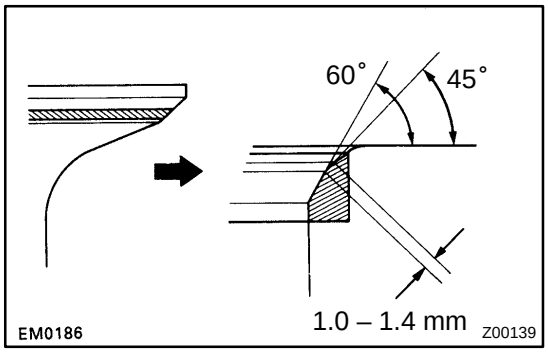

(2) If the seating is too low on the valve face, use 60° and 45° cutters to correct the seat.

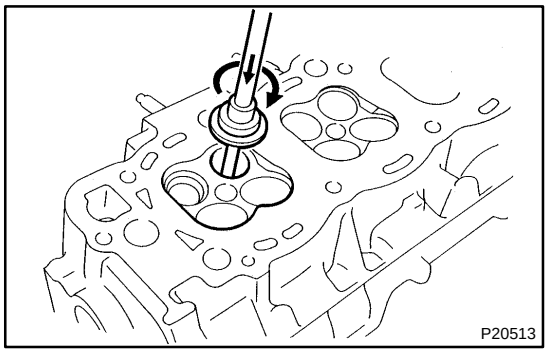

(d) Hand–lap the valve and valve seat with an abrasive compound.

(e) After hand–lapping, clean the valve and valve seat.

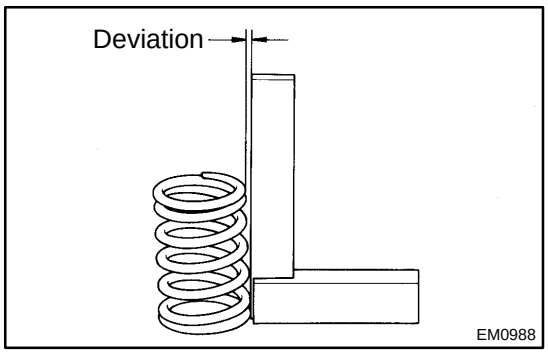

9. INSPECT VALVE SPRINGS

(a) Using a steel square, measure the squareness of the valve spring.

Maximum deviation: 2.0 mm (0.079 in.)

If deviation is greater than maximum, replace the valve spring.

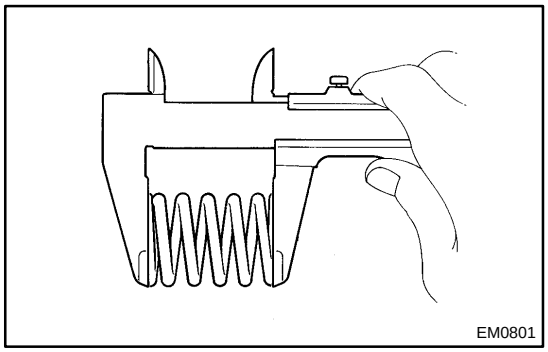

(b) Using vernier calipers, measure the free length of the valve spring.

Free length: 44.78 mm (1.7630 in.)

If the free length is not as specified, replace the valve spring.

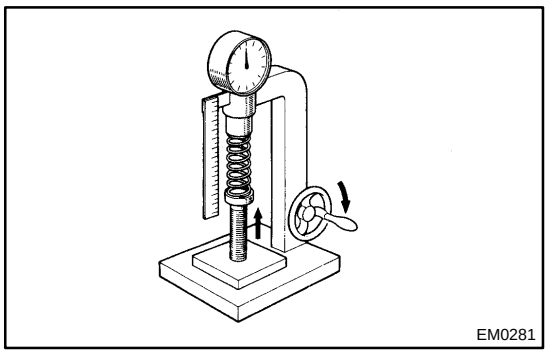
EM0281

(c) Using a spring tester, measure the tension of the valve spring at the specified installed length.

Installed tension:
186 – 206 N (19.0 – 21.0 kgf, 41.9 – 46.3 lbf)
at 33.3 mm (1.311 in.)

If the installed tension is not as specified, replace the valve spring.

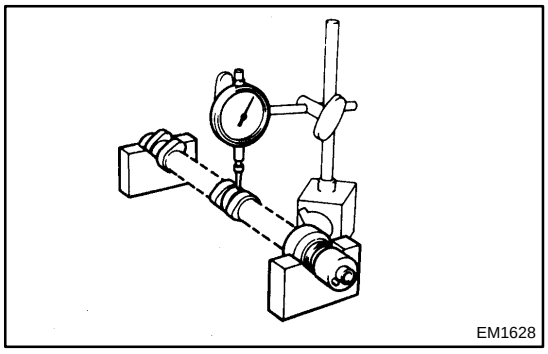
EM1628

10. INSPECT CAMSHAFT FOR RUNOUT

(a) Place the camshaft on V–blocks.

(b) Using a dial indicator, measure the circle runout at the center journal.

Maximum circle runout: 0.06 mm (0.0024 in.)

If the circle runout is greater than maximum, replace the camshaft.

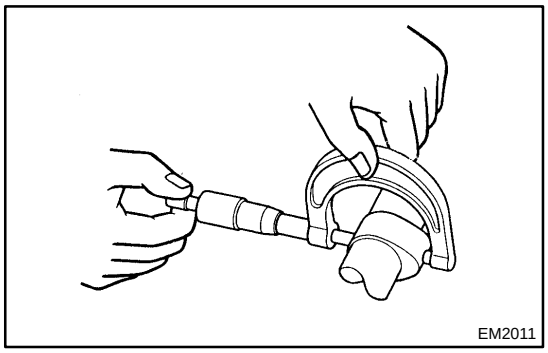
EM2011

11. INSPECT CAM LOBES

Using a micrometer, measure the cam lobe height.

Cam lobe height:

Intake	STD	42.31 – 42.41 mm (1.6657 – 1.6697 in.)
	Minimum	42.16 mm (1.6598 in.)
Exhaust	STD	41.96 – 42.06 mm (1.6520 – 1.6559 in.)
	Minimum	41.81 mm (1.6461 in.)

If the cam lobe height is greater than maximum, replace the camshaft.

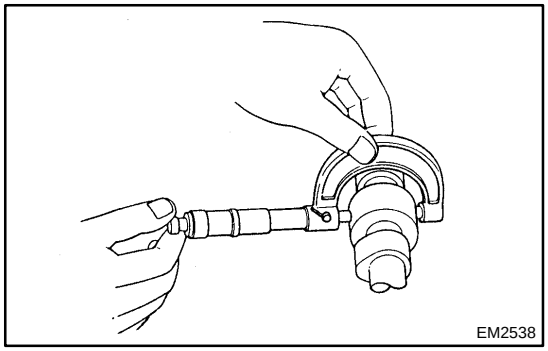
EM2538

12. INSPECT CAMSHAFT JOURNALS

Using a micrometer, measure the journal diameter.

Journal diameter:
26.949 – 26.965 mm (1.0610 – 1.0616 in.)

If the journal diameter is not as specified, check the oil clearance.

13. INSPECT CAMSHAFT BEARINGS

Check the bearings for flaking and scoring.

If the bearings are damaged, replace the bearing caps and cylinder head as a set.

14. INSPECT CAMSHAFT GEAR SPRING

Using vernier calipers, measure the free distance between the spring ends.

Free distance: 18.2 – 18.8 mm (0.712 – 0.740 in.)

If the free distance is not as specified, replace the gear spring.

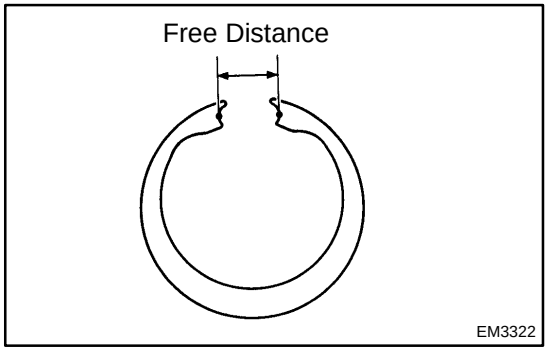

EM3322

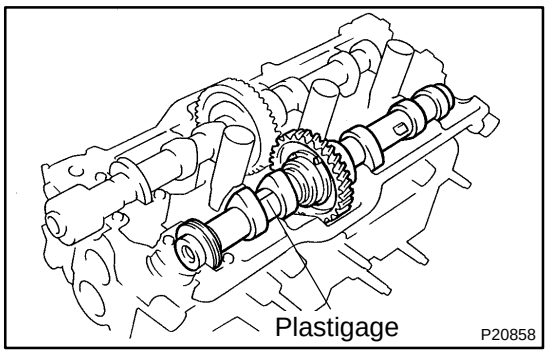

15. INSPECT CAMSHAFT JOURNAL OIL CLEARANCE

(a) Clean the bearing caps and camshaft journals.
(b) Place the camshafts on the cylinder head.
(c) Lay a strip of Plastigage across each of the camshaft journals.
(d) Install the bearing caps (See page EM–51).

NOTICE:
Do not turn the camshaft.

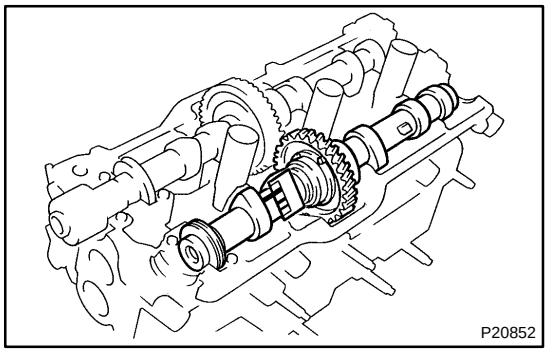

(e) Remove the bearing caps.
(f) Measure the Plastigage at its widest point.
Standard oil clearance:
0.035 – 0.072 mm (0.0014 – 0.0028 in.)
Maximum oil clearance: 0.10 mm (0.0039 in.)

If the oil clearance is greater than maximum, replace the camshaft. If necessary, replace the bearing caps and cylinder head as a set.

(g) Completely remove the Plastigage.

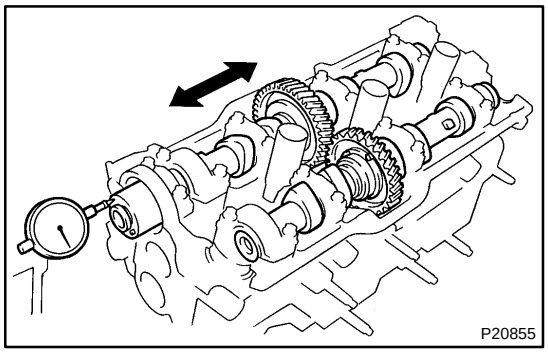

16. INSPECT CAMSHAFT THRUST CLEARANCE

(a) Install the camshafts (See page EM–51).
(b) Using a dial indicator, measure the thrust clearance while moving the camshaft back and forth.
Standard thrust clearance:
0.033 – 0.080 mm (0.0013 – 0.0031 in.)
Maximum thrust clearance: 0.12 mm (0.0047 in.)

If the thrust clearance is greater than maximum, replace the camshaft. If necessary, replace the bearing caps and cylinder head as a set.

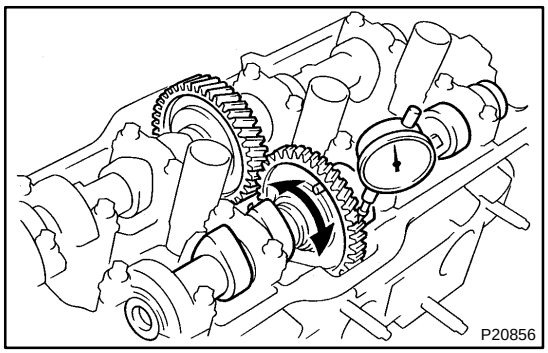

17. INSPECT CAMSHAFT GEAR BACKLASH

(a) Install the camshafts without installing the exhaust camshaft sub–gear (See page EM–51).
(b) Using a dial indicator, measure the backlash.
Standard backlash:
0.020 – 0.200 mm (0.0008 – 0.0079 in.)
Maximum backlash: 0.30 mm (0.0188 in.)

If the backlash is greater than maximum, replace the camshafts.

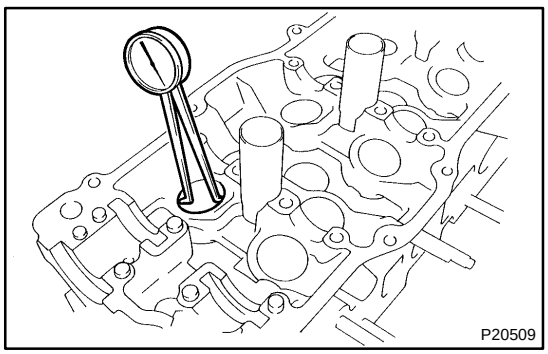

18. INSPECT VALVE LIFTERS AND LIFTER BORES

(a) Using a caliper gauge, measure the lifter bore diameter of the cylinder head.
Lifter bore diameter:
31.000 – 31.018 mm (1.2205 – 1.2212 in.)

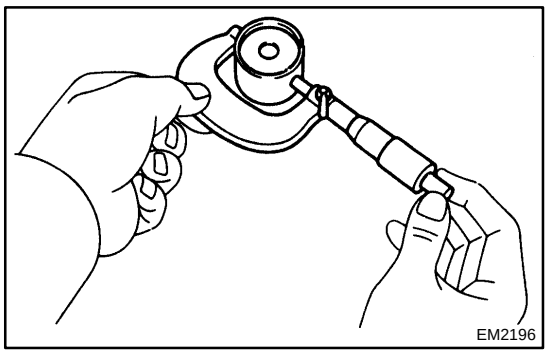
EM2196

(b) Using a micrometer, measure the lifter diameter.
Lifter diameter:
30.966 – 30.976 mm (1.2191 – 1.2195 in.)

(c) Subtract the lifter diameter measurement from the lifter bore diameter measurement.
Standard oil clearance:
0.024 – 0.052 mm (0.0009 – 0.0020 in.)
Maximum oil clearance: 0.08 mm (0.0031 in.)

If the oil clearance is greater than maximum, replace the lifter. If necessary, replace the cylinder head.

19. INSPECT INTAKE MANIFOLD, EXHAUST MANIFOLDS, AIR INTAKE CHAMBER AND INTAKE AIR CONNECTOR

(a) Intake Manifold:
Using precision straight edge and feeler gauge, measure the surfaces contacting the cylinder head and intake air connector for warpage.
Maximum warpage: 0.10 mm (0.0039 in.)

If warpage is greater than maximum, replace the intake manifold.

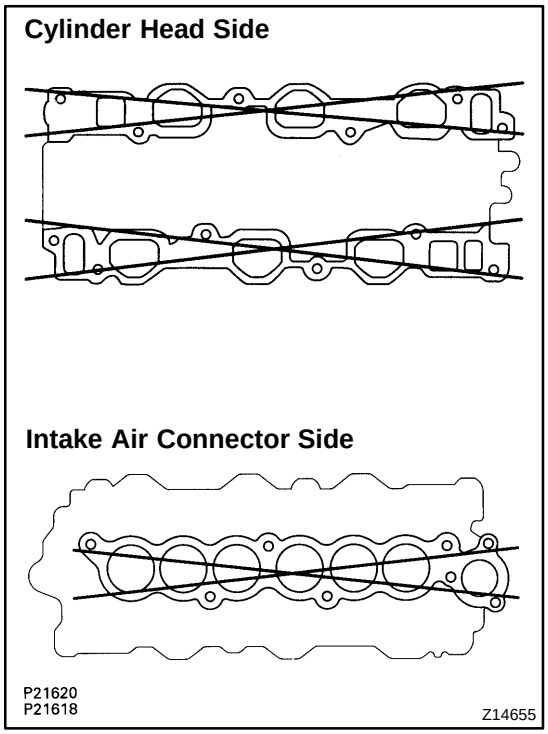

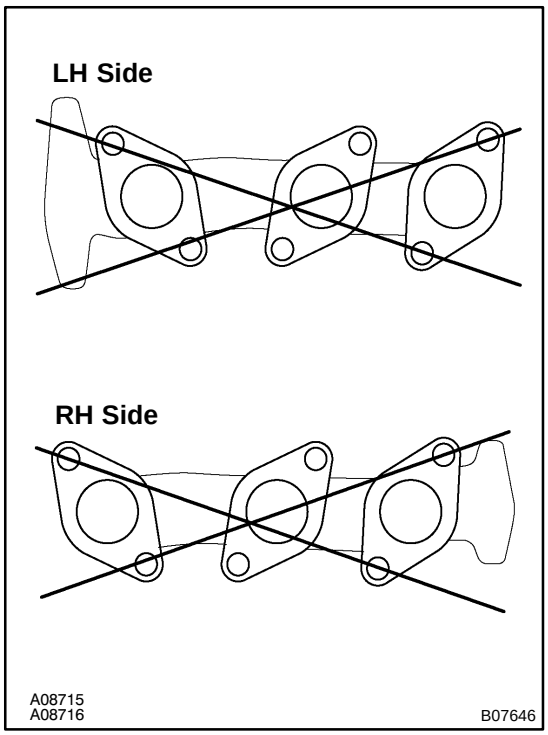

(b) Exhaust Manifolds:
Measure the surfaces contacting the cylinder head for warpage.
Maximum warpage: 1.00 mm (0.0394 in.)

If warpage is greater than maximum, replace the exhaust manifold.

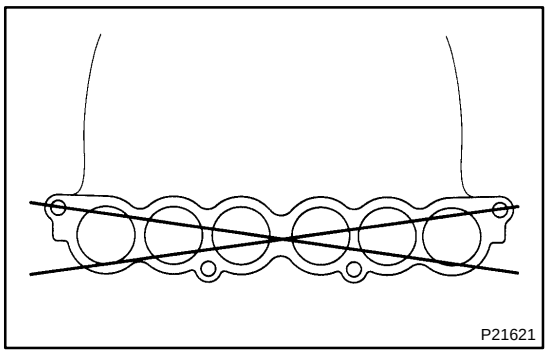

(c) Air Intake Chamber and Intake Air Connector:
Measure the surfaces contacting the intake manifold and intake air connector for warpage.
Maximum warpage: 0.10 mm (0.0039 in.)

If warpage is greater than maximum, replace the air intake chamber or intake air connector.

EM12G–01

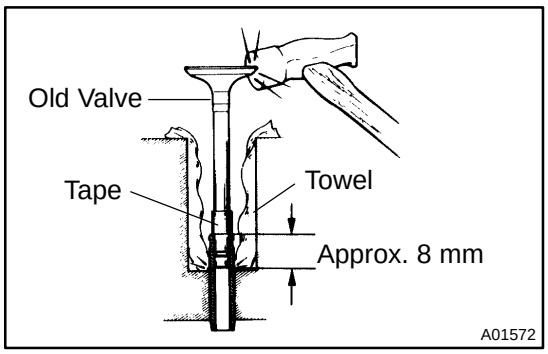

REPLACEMENT

1. REPLACE VALVE GUIDE BUSHINGS

(a) w/ Snap ring:
Insert an old valve wrapped with tape into the valve guide bushing, and break off the valve guide bushing by hitting it with a hammer. Remove the snap ring.

HINT:

Wrap the tape approx. 8 mm (0.31 in.) from the valve stem end.

NOTICE:

Be careful not to damage the valve lifter hole.

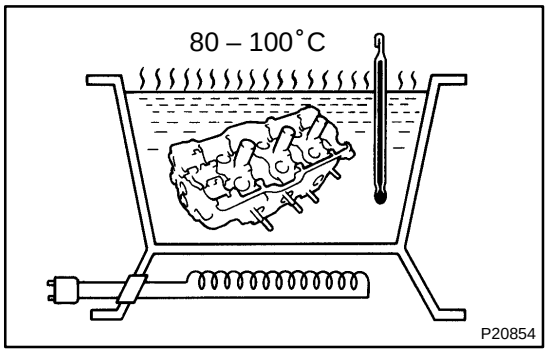

(b) Gradually heat the cylinder head to 80 – 100˚C (176 – 212˚F).

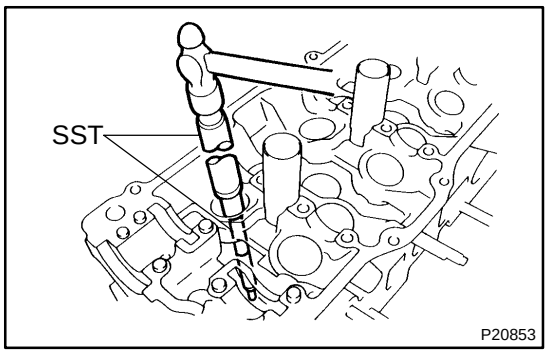

(c) Using SST and a hammer, tap out the guide bushing.
SST 09201–10000 (09201–01060), 09950–70010 (09951–07150)

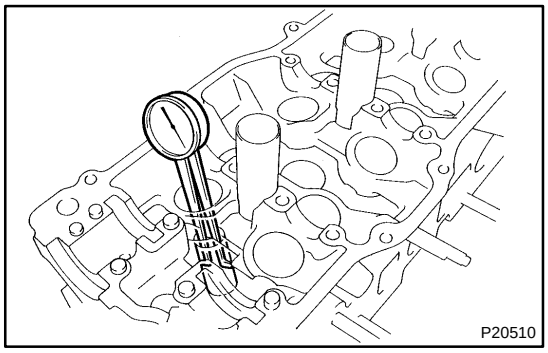

(d) Using a caliper gauge, measure the bushing bore diameter of the cylinder head.

(e) Select a new guide bushing (STD size or O/S 0.05).
Both intake and exhaust:

Bushing bore diameter	Bushing size
10.985 – 11.027 mm (0.4350 – 0.4341 in.)	Use STD
11.050 – 11.077 mm (0.4350 – 0.4361 in.)	Use O/S 0.05

If the bushing bore diameter of the cylinder head is greater than 11.027 mm (0.4341 in.), machine the bushing bore to these dimension:

11.050 – 11.077 mm (0.4350 – 0.4361 in.)

If the bushing bore diameter of the cylinder head is greater than 11.077 mm (0.4361 in.), replace the cylinder head.

(f) Gradually heat the cylinder head to 80 – 100°C (176 – 212°F).

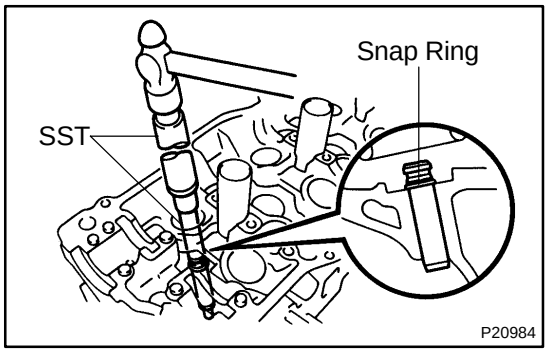

(g) Using SST and a hammer, tap in a new guide bushing until the snap ring makes contact with the cylinder head.
SST 09201–10000 (09201–01060), 09950–70010 (09951–07150)

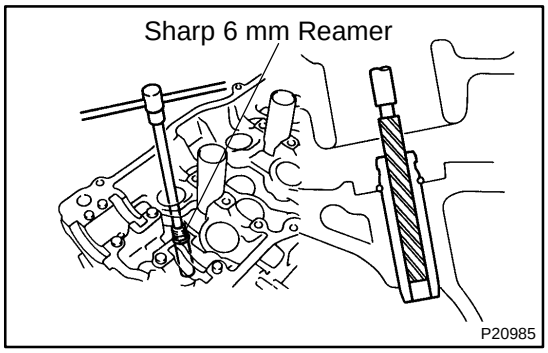

(h) Using a sharp 6 mm reamer, ream the guide bushing to obtain the standard specified clearance (See page EM–38) between the guide bushing and valve stem.

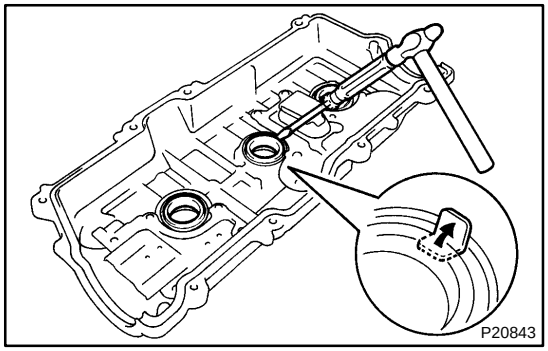

2. REPLACE SPARK PLUG TUBE GASKETS

(a) Bend up the tab on the ventilation baffle plate which prevents the gasket from the slipping out.

(b) Using a screwdriver and hammer, tap out the gasket.

NOTICE:

Do not scratch or damage the joint of the cylinder head cover.

(c) Using needle–nose pliers, pry out the gasket.

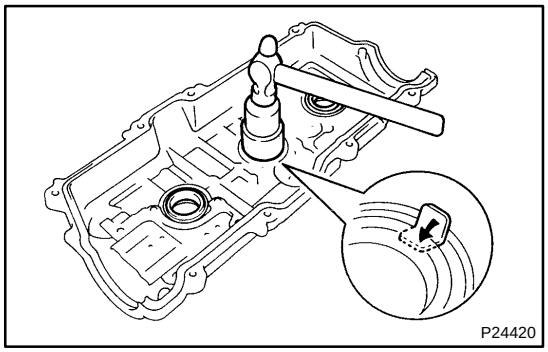

(d) Using a 32 mm socket wrench and hammer, tap in a new gasket until its surface is flush with the upper edge of the cylinder head cover.

(e) Apply a light coat of MP grease to the gasket lip.

(f) Return the ventilation plate tab to its original position.

EM06O–02

REASSEMBLY

HINT:

- ▲ Thoroughly clean all parts to be assembled.
- ▲ Before installing the parts, apply fresh engine oil to all slidings and rotating surfaces.
- ▲ Replace all gaskets and oil seals with new ones.

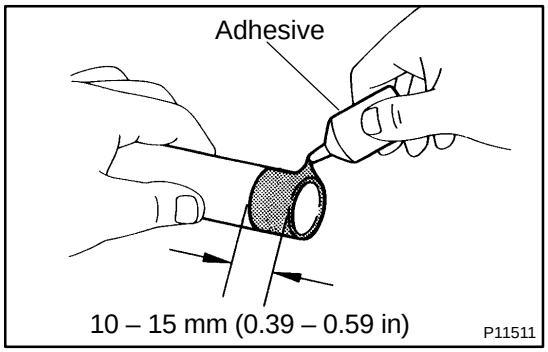

1. INSTALL SPARK PLUG TUBES

HINT:

When using a new cylinder head, spark plug tubes must be installed.

(a) Apply adhesive to the end of the spark plug tube.
Adhesive:
Part No. 08833–00070, THREE BOND 1324 or equivalent

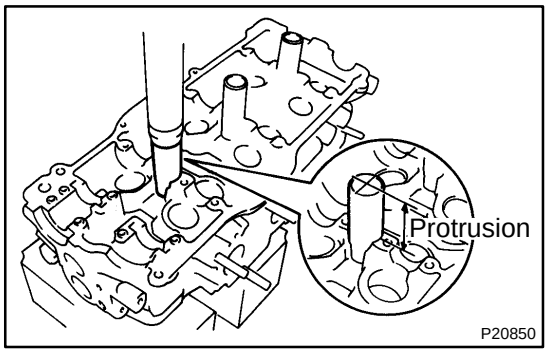

(b) Using a press, press in a new spark plug tube until there is 49.0 – 49.4 mm (1.929 – 1.945 in.) protruding from the camshaft bearing cap installation surface of the cylinder head.

NOTICE:
Avoid pressing a new spark plug tube too far for measuring the amount of the protrusion while pressing.

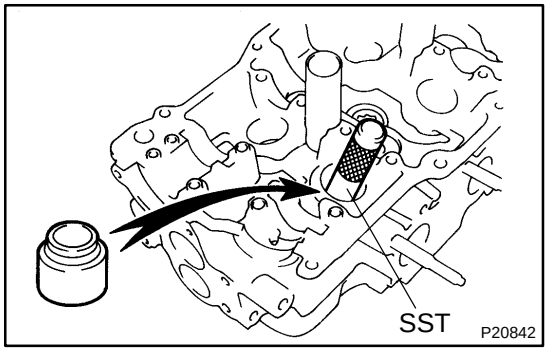

2. INSTALL VALVES

(a) Using SST, push in a new oil seal.
SST 09201–41020

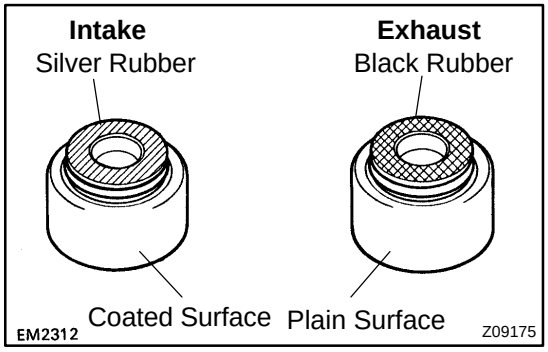

HINT:

The intake valve oil seal is silver and the exhaust valve oil seal is black.

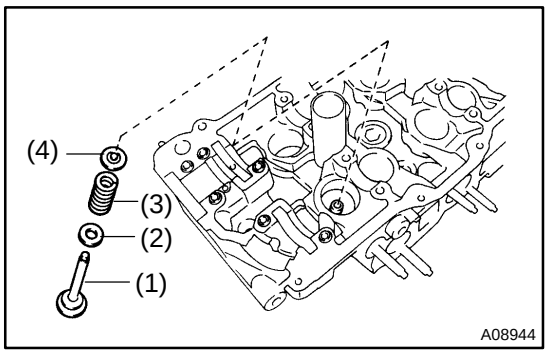

(b) Install the valve (1), spring seat (2), valve spring (3) and spring retainer (4).

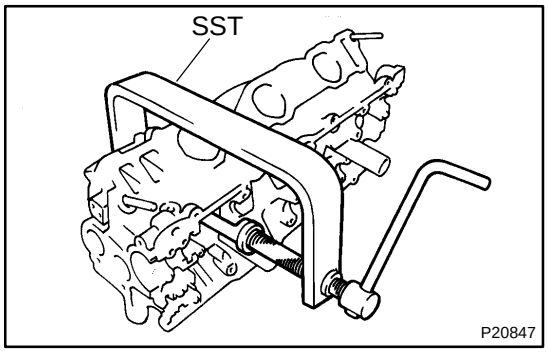

(c) Using SST, compress the valve spring and place the 2 keepers around the valve stem.
SST 09202–70020 (09202–00010)

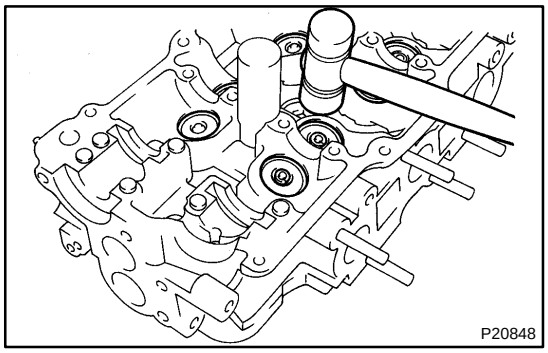

(d) Using a plastic–faced hammer, lightly tap the valve stem tip to ensure a proper fit.

3. INSTALL VALVE LIFTERS AND SHIMS

(a) Install the valve lifter and shim.

(b) Check that the valve lifter rotates smoothly by hand.

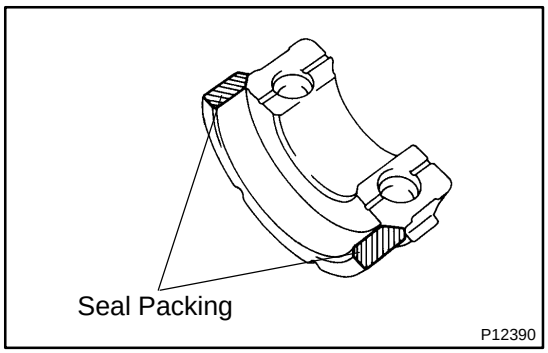

4. INSTALL CAMSHAFT HOUSING PLUGS

(a) Remove any old packing (FIPG) material.

(b) Apply seal packing to the bearing cap as shown.
Seal packing: Part No. 08826–00080 or equivalent

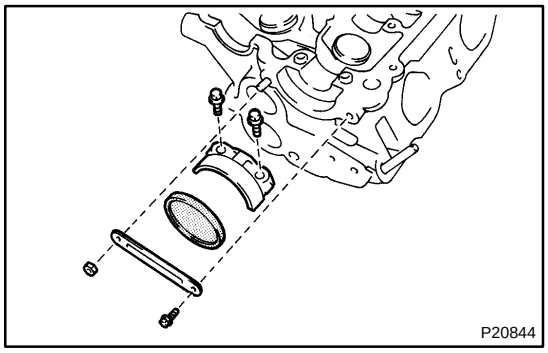

(c) Place a new housing plug in position on the cylinder head, facing the cap side inward.

(d) Install the camshaft bearing cap with the 2 bolts.
Torque: 16 N·m (160 kgf·cm, 12 ft·lbf)

(e) Install the cylinder head rear plate and ground strap with the bolt and nut.
Torque: 8 N·m (80 kgf·cm, 71 in.·lbf)

EM1LP–02

INSTALLATION

1. INSTALL CYLINDER HEAD

(a) Place 2 new cylinder head gaskets in position on the cylinder block.

NOTICE:

Be careful of the installation direction.

(b) Place the 2 cylinder heads in position on the cylinder head gaskets.

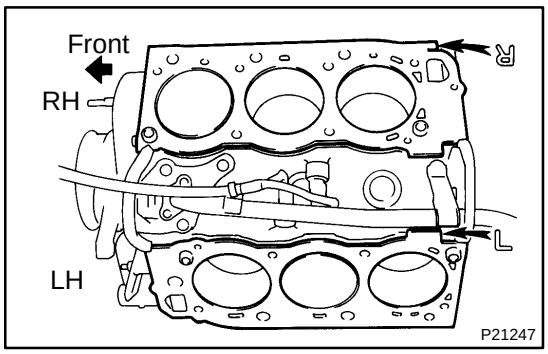

(c) Install the 12 pointed head bolts.

HINT:

- ▲ The cylinder head bolts are tightened in 3 progressive steps (steps (2), (4) and (5)).
- ▲ If any bolt is broken or deformed, replace it.

(1) Apply a light coat of engine oil on the threads and under the heads of the cylinder head bolts.

(2) Install and uniformly tighten the cylinder head bolts on each cylinder head, in several passes, in the sequence shown, then repeat for the other side, as shown.

Torque: 34 N·m (350 kgf·cm, 25 ft·lbf)

If any of the cylinder head bolts does not meet the torque specification, replace the cylinder head bolt.

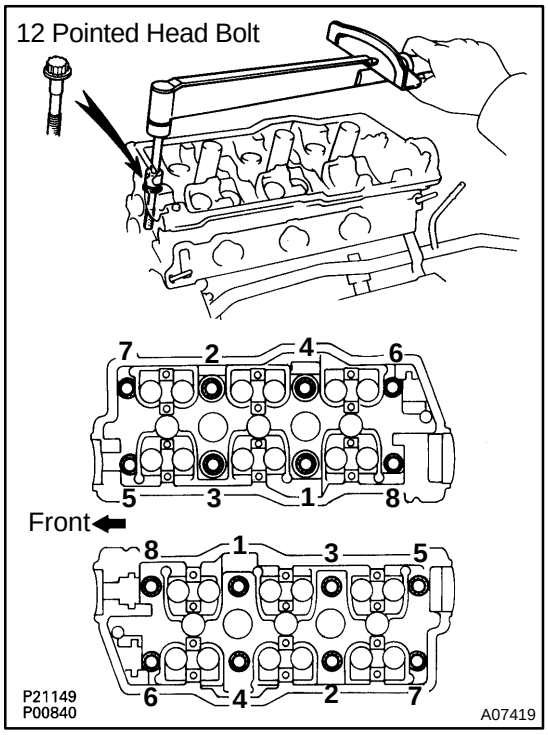

(3) Mark the front of the cylinder head bolt with paint.

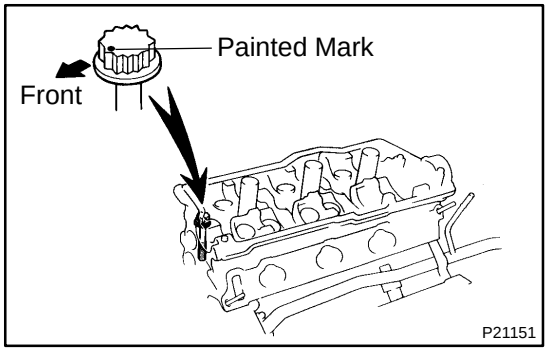

(4) Retighten the cylinder head bolts by 90° in the numerical order shown.

(5) Retighten the cylinder head bolts by an additional 90°.

(6) Check that the painted mark is now facing rearward.

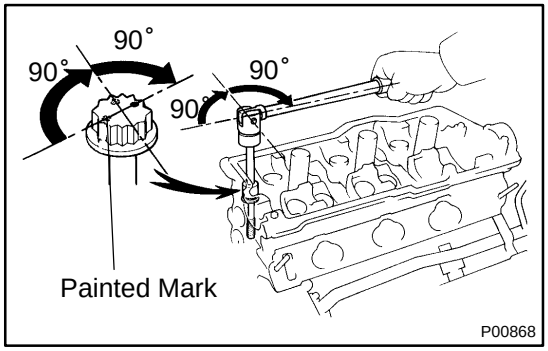

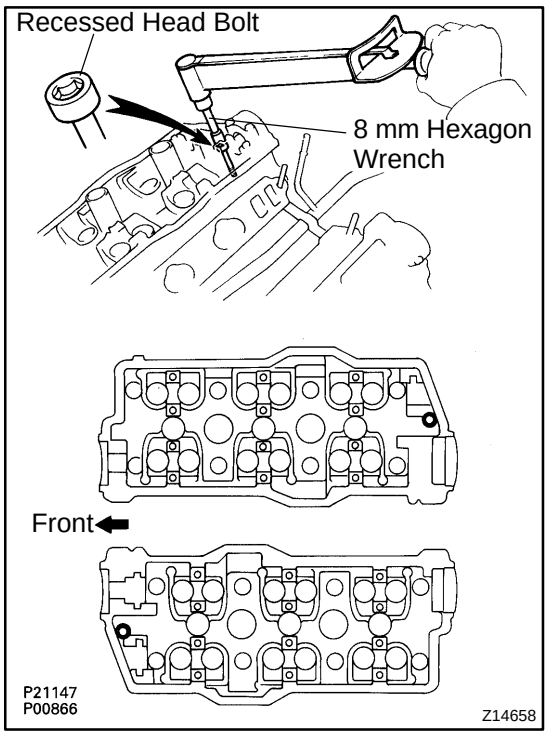

(d) Install recessed head bolts.
(1) Apply a light coat of engine oil on the threads and under the heads of the cylinder head bolts.
(2) Using an 8 mm hexagon wrench, install the cylinder head bolt on each cylinder head, then repeat for the other side, as shown.

Torque: 18 N·m (185 kgf·cm, 13 ft·lbf)

2. CONNECT GROUND STRAP

Install the bolt and connect the ground strap.

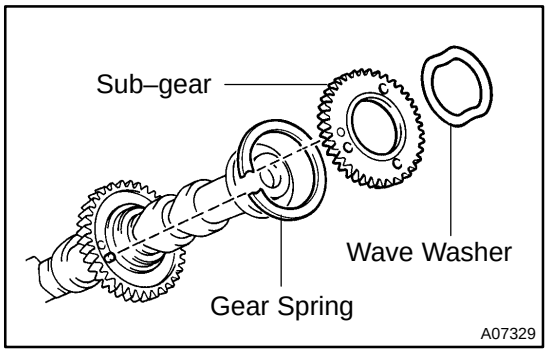

3. ASSEMBLE EXHAUST CAMSHAFTS

(a) Mount the hexagonal wrench head portion of the camshaft in a vise.

NOTICE:

Be careful not to damage the camshaft.

(b) Install the camshaft gear spring, camshaft sub – gear and wave washer.

HINT:

Attach the pins on the gears to the gear spring ends.

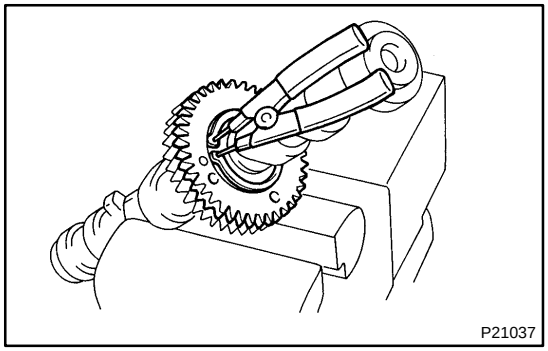

(c) Using snap ring pliers, install the snap ring.

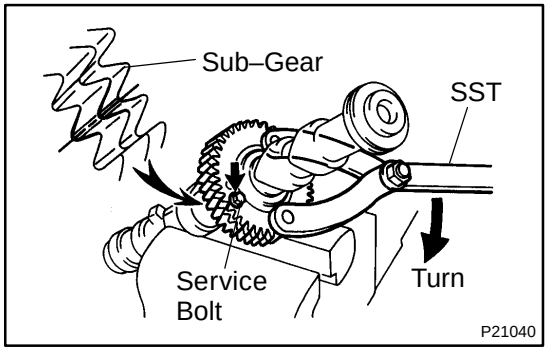

(d) Using SST, align the holes of the camshaft main gear and sub–gear by turning camshaft sub–gear clockwise, and temporarily install a service bolt.

SST 09960–10010 (09962–01000, 09963–00600)

(e) Align the gear teeth of the main gear and sub–gear, and tighten the service bolt.

4. INSTALL CAMSHAFTS OF RH CYLINDER HEAD

NOTICE:

Since the thrust clearance of the camshaft is small, the camshaft must be held level while it is being installed. If the camshaft is not level, the portion of the cylinder head receiving the shaft thrust may crack or be damaged, causing the camshaft to seize or break. To avoid this, these steps should be carried out.

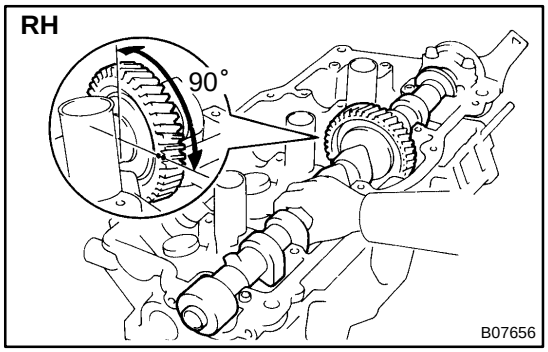

(a) Install the intake camshaft of the RH cylinder head.
  (1) Apply fresh engine oil to the thrust portion and journal of the camshaft.
  (2) Place the intake camshaft at 90° angle of timing mark (2 dot marks) on the cylinder head.

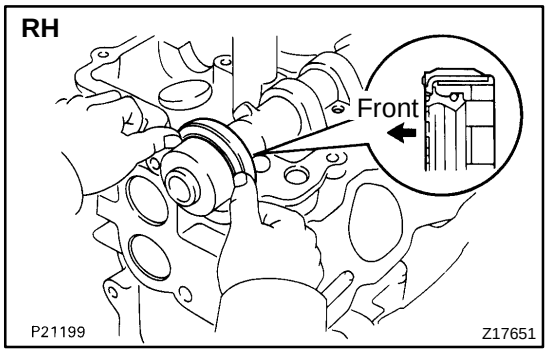

  (3) Apply MP grease to a new oil seal lip.
  (4) Install the oil seal to the camshaft.

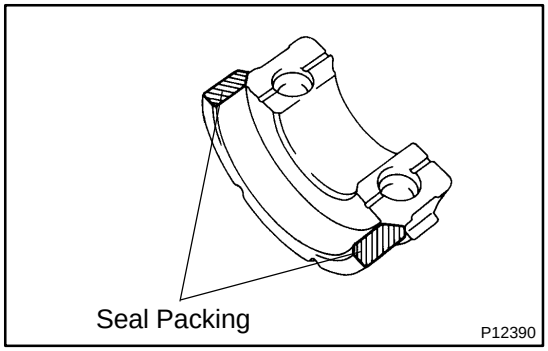

  (5) Remove any old packing (FIPG) material.
  (6) Apply seal packing to the No. 1 bearing cap as shown.

Seal packing: Part No. 08826–00080 or equivalent

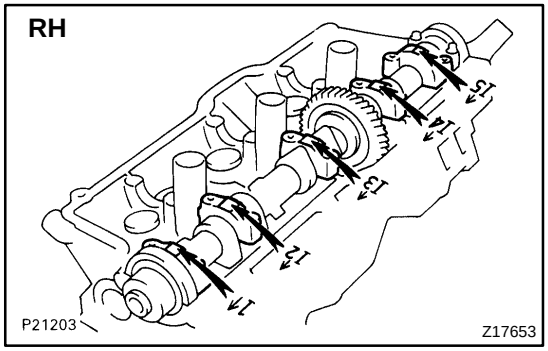

  (7) Install the 5 bearing caps in their proper locations.

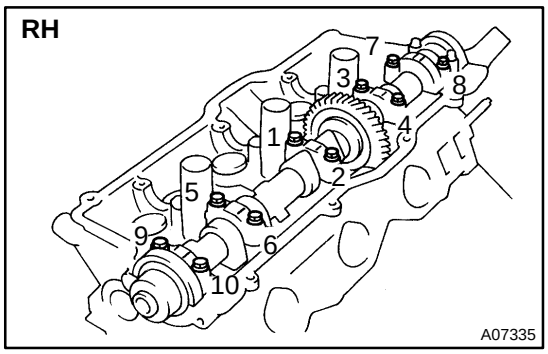

(8) Apply a light coat of engine oil on the threads and under the heads of the bearing cap bolts.
(9) Install and uniformly tighten the 10 bearing cap bolts, in several passes, in the sequence shown.

Torque: 16 N·m (160 kgf·cm, 12 ft·lbf)

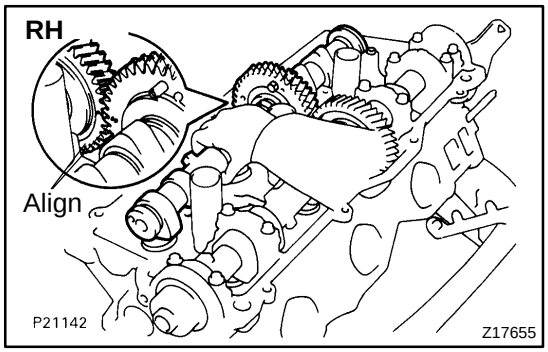

(b) Install the exhaust camshaft of the RH cylinder head.
(1) Apply fresh engine oil to the thrust portion and journal of the camshaft.
(2) Align the timing marks (2 dot marks) of the camshaft drive and driven gears.
(3) Place the exhaust camshaft on the cylinder head.

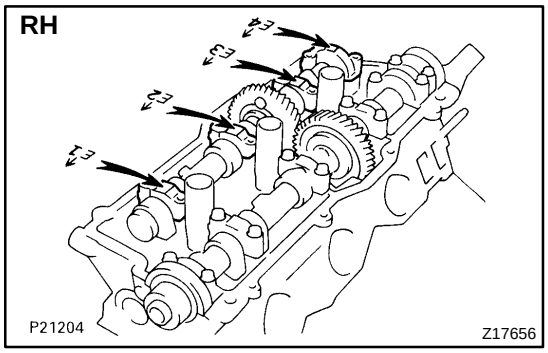

(4) Install the 4 bearing caps in their proper locations.

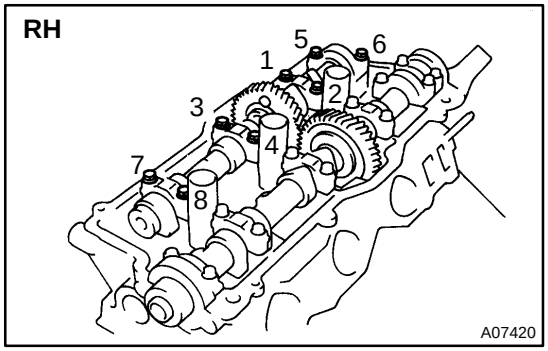

(5) Apply a light coat of engine oil on the threads and under the heads of the bearing cap bolts.
(6) Install and uniformly tighten the 8 bearing cap bolts, in several passes, in the sequence shown.

Torque: 16 N·m (160 kgf·cm, 12 ft·lbf)

(7) Remove the service bolt.

5. INSTALL CAMSHAFTS OF LH CYLINDER HEAD

NOTICE:

Since the thrust clearance of the camshaft is small, the camshaft must be held level while it is being installed. If the camshaft is not level, the portion of the cylinder head receiving the shaft thrust may crack or be damaged, causing the camshaft to seize or break. To avoid this, these steps should be carried out.

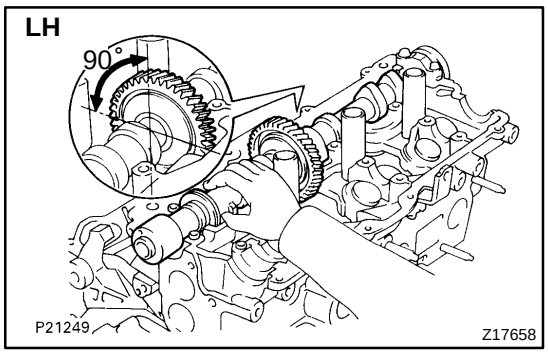

(a) Install the intake camshaft of the LH cylinder head.
(1) Apply fresh engine oil to the thrust portion and journal of the camshaft.
(2) Place the intake camshaft at 90° angle of timing mark (1 dot mark) on the cylinder head.

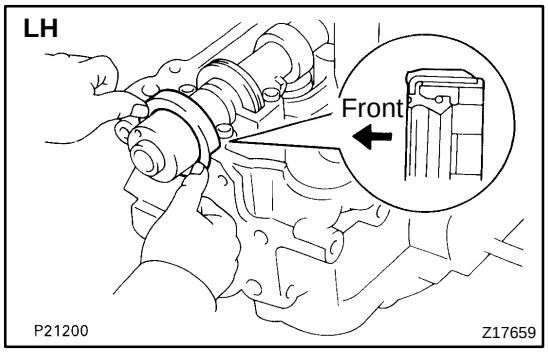

(3) Apply MP grease to a new oil seal lip.
(4) Install the oil seal to the camshaft.

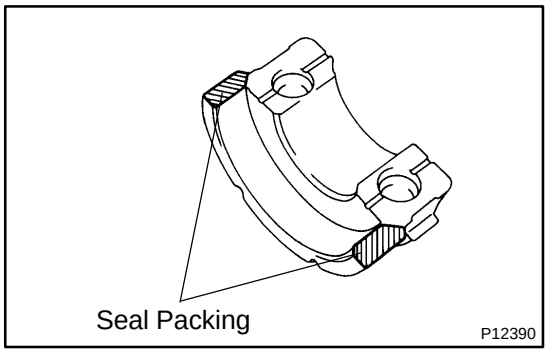

(5) Remove any old packing (FIPG) material.
(6) Apply seal packing to the No. 1 bearing cap.

Seal packing: Part No. 08826–00080 or equivalent

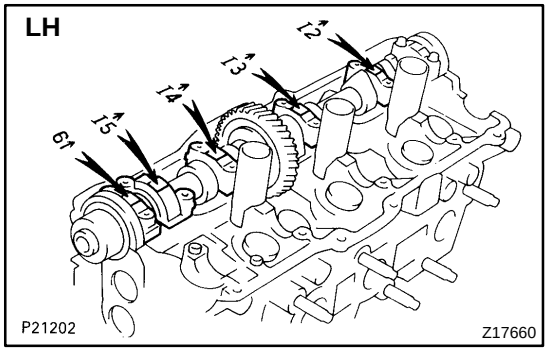

(7) Install the 5 bearing caps in their proper locations.

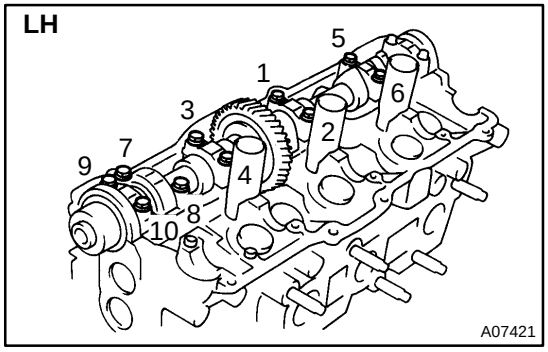

(8) Apply a light coat of engine oil on the threads and under the heads of the bearing cap bolts.
(9) Install and uniformly tighten the 10 bearing cap bolts, in several passes, in the sequence shown.

Torque: 16 N·m (160 kgf·cm, 12 ft·lbf)

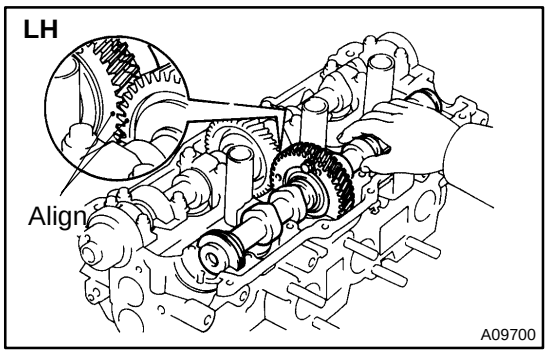

(b) Install the exhaust camshaft of the LH cylinder head.
(1) Apply fresh engine oil to the thrust portion and journal of the camshaft.
(2) Align the timing marks (1 dot mark) of the camshaft drive and driven gears.
(3) Place the exhaust camshaft on the cylinder head.

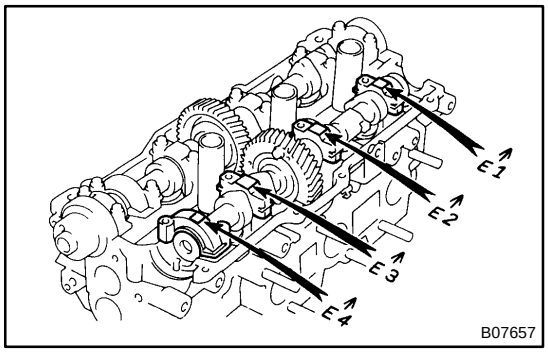

(4) Install the 4 bearing caps in their proper locations.

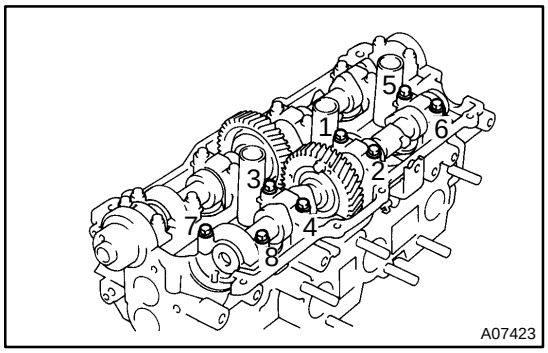

(5) Apply a light coat of engine oil on the threads and under the heads of bearing cap bolts.
(6) Install and uniformly tighten the 8 bearing cap bolts, in several passes, in the sequence shown.

Torque: 16 N·m (160 kgf·cm, 12 ft·lbf)

(7) Remove the service bolt.

6. CHECK AND ADJUST VALVE CLEARANCE (See page EM–4)

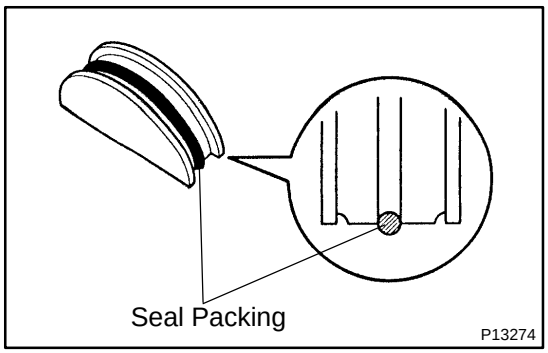

7. INSTALL SEMI–CIRCULAR PLUGS

(a) Remove any old packing (FIPG) material.
(b) Apply seal packing to the semi–circular plug grooves.

Seal packing: Part No. 08826–00080 or equivalent

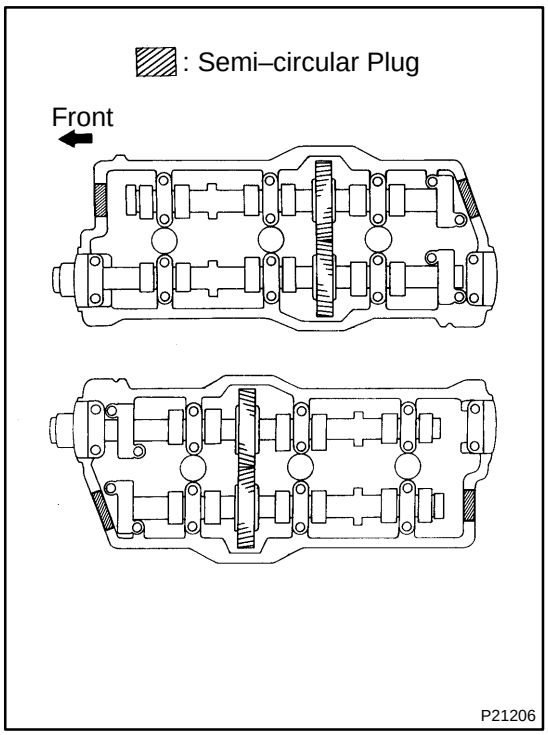

(c) Install the 4 semi–circular plugs to the cylinder heads.

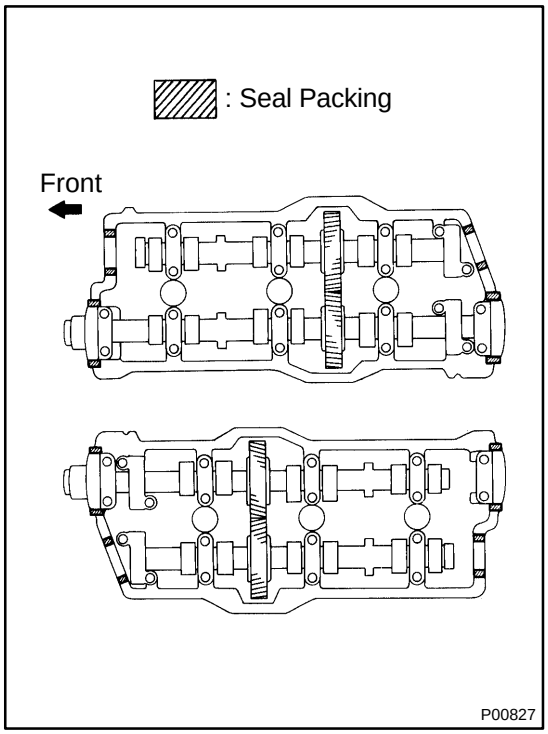

8. INSTALL CYLINDER HEAD COVERS

(a) Apply seal packing to the cylinder heads as shown in the illustration.
Seal packing: Part No. 08826–00080 or equivalent

(b) Install the gasket to the cylinder head cover.

(c) Install the cylinder head cover with the 8 bolts. Uniformly tighten the bolts in several passes. Install the 2 cylinder head covers.
Torque: 6 N·m (60 kgf·cm, 53 in.·lbf)

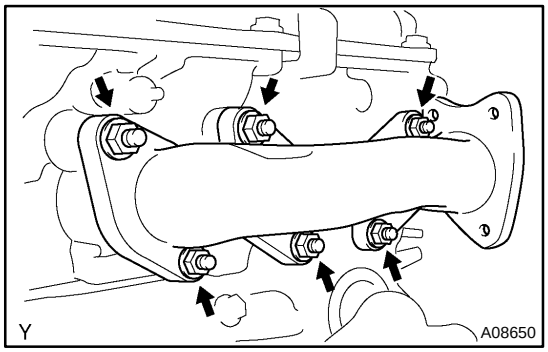

9. INSTALL RH AND LH EXHAUST MANIFOLDS

Install 2 new gaskets and the RH and LH exhaust manifolds with the 12 nuts.
Torque: 40 N·m (400 kgf·cm, 30 ft·lbf)

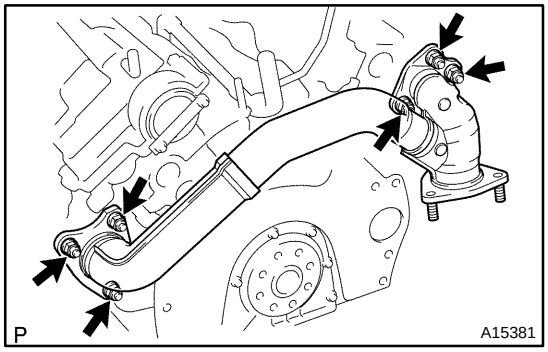

10. INSTALL EXHAUST CROSSOVER PIPE

Install 2 new gaskets and the crossover pipe with 6 new nuts.

Torque: 45 N·m (450 kgf·cm, 33 ft·lbf)

11. INSTALL GENERATOR BRACKET

Torque: 18.5 N·m (185 kgf·cm, 13 ft·lbf)

12. INSTALL OIL DIPSTICK AND GUIDE

(a) Install a new O–ring to the dipstick guide.

(b) Apply soapy water to the O–ring.

(c) Push in the dipstick guide end into the guide hole of the oil pan.

(d) Install the dipstick guide with the 2 bolts.

Torque: 8 N·m (80 kgf·cm, 71 in.·lbf)

(e) Install the dipstick.

13. INSTALL PS PUMP BRACKET

Torque: 18.5 N·m (185 kgf·cm, 13 ft·lbf)

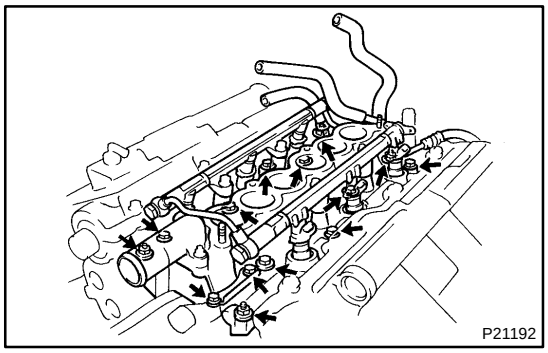

14. INSTALL INTAKE MANIFOLD ASSEMBLY

(a) Install 2 new gaskets and the intake manifold, the delivery pipe and injectors assembly with the 8 bolts, 4 plate washers and 4 nuts.

Torque: 18.5 N·m (185 kgf·cm, 13 ft·lbf)

(b) Install the intake manifold stay with the 2 bolts.

Torque: 18.5 N·m (185 kgf·cm, 13 ft·lbf)

(c) Connect the fuel inlet hose.

15. INSTALL FUEL PRESSURE REGULATOR

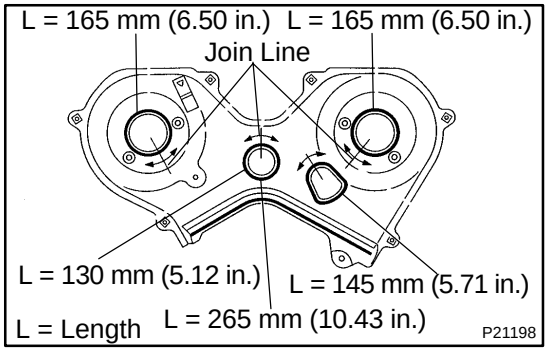

16. INSTALL NO. 3 TIMING BELT COVER

(a) Check that the timing belt cover gaskets have no cracks or peeling, etc.

If the gaskets do have cracks or peeling etc., replace them using these steps:

(1) Using a screwdriver and gasket scraper, remove all the old gasket materials.

(2) Thoroughly clean all components to remove all the loose material.

(3) Remove the backing paper from a new gasket and install the gasket evenly to the part of the timing belt cover shaded black in the illustration.

(b) Install the timing belt cover with the 6 bolts.

Torque: 9 N·m (90 kgf·cm, 80 in.·lbf)

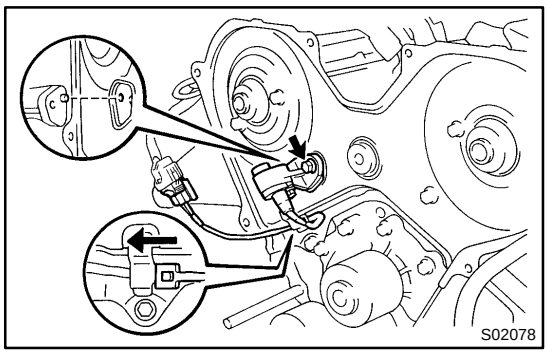

17. INSTALL CAMSHAFT POSITION SENSOR

(a) Install the camshaft position sensor with the bolt.
Torque: 8 N·m (80 kgf·cm, 71 in.·lbf)

HINT:
Match the protrusion of the sensor with the indentation of the RH cylinder head.

(b) Connect the clamp to the No.3 timing belt cover.
(c) Connect the camshaft position sensor connector.

18. INSTALL TIMING BELT (See page EM–20)

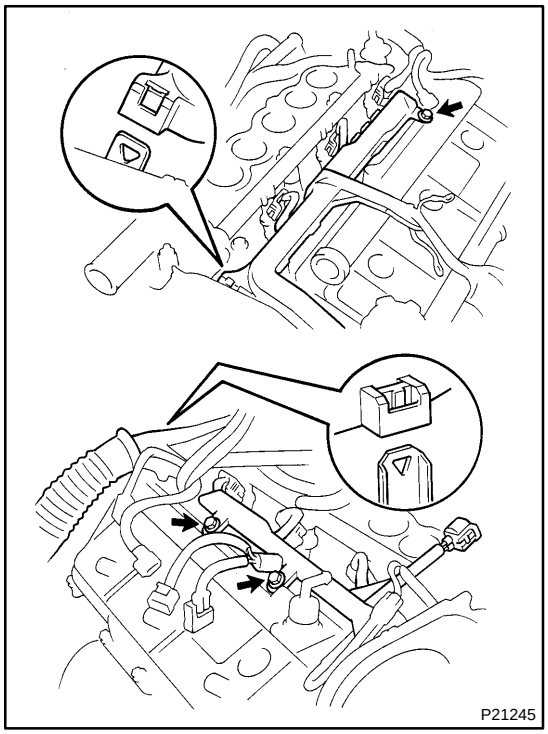

19. CONNECT ENGINE WIRE

(a) Install the engine wire with the 3 bolts.
(b) Connect the 3 engine wire clamps.
(c) Connect the oil pressure sensor connector.
(d) Connect the crankshaft position sensor connector.
(e) Connect the 6 injector connectors.
(f) Connect the ECT sender gauge connector.
(g) Connect the ECT sensor connector.
(h) Connect the knock sensor connector.
(i) Connect the camshaft position sensor connector.

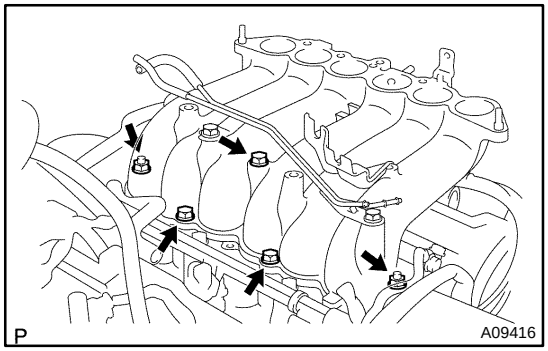

20. INSTALL INTAKE AIR CONNECTOR

(a) Install a new gasket and the intake air connector with the 3 bolts and 2 nuts.
Torque: 18.5 N·m (185 kgf·cm, 13 ft·lbf)
(b) Install the bolt holding the ground strap to the intake air connector.
(c) Connect the brake booster vacuum hose to the intake air connector.
(d) Connect the 2 fuel return hoses.
(e) Connect the vacuum sensing hose.
(f) Install the bolt holding the engine wire to the intake air connector.

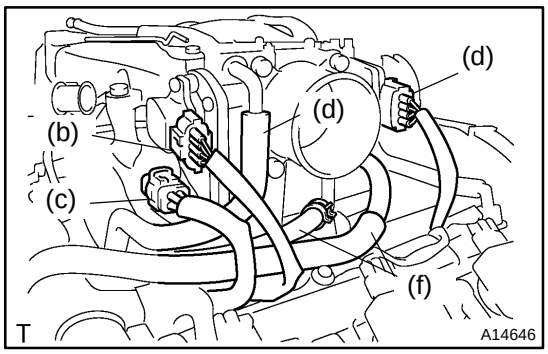

21. INSTALL AIR INTAKE CHAMBER ASSEMBLY

(a) Install a new gasket and the air intake chamber assembly with the 4 bolts and 2 nuts.
Torque:18.5 N·m (185 kgf·cm, 13 ft·lbf)

(b) Connect the throttle position sensor connector.

(c) Connect the throttle control motor connector.

(d) Connect the accelerator pedal position sensor connector.

(e) Connect the air hose.

(f) Connect the 2 water bypass hoses.

22. INSTALL AIR INTAKE CHAMBER STAY

(a) Install the air intake chamber stay with the 2 bolts.
Torque:
18.5 N·m (185 kgf·cm, 13 ft·lbf) for 12 mm head
40 N·m (400 kgf·cm, 30 ft·lbf) for 14 mm head

(b) A/T:
Install the oil filler tube.
(1) Install a new O–ring to the oil filler tube.
(2) Apply soapy water to the O–ring.
(3) Push in the oil filler tube end into the tube hole of the oil pan.
(4) Install the oil filler tube clamp with the bolt.
(5) Install the dipstick.

23. INSTALL GENERATOR

24. INSTALL NO. 2 IDLER PULLEY

25. CONNECT HEATER HOSE AND UPPER RADIATOR HOSE

26. CONNECT ACCELERATOR CABLE

27. INSTALL SPARK PLUGS

28. INSTALL HIGH–TENSION CORDS WITH IGNITION COILS (See page IG–1)

29. INSTALL MAF METER, RESONATOR AND AIR CLEANER CAP ASSEMBLY

30. INSTALL FRONT EXHAUST PIPE (See page EM–103)

31. FILL WITH ENGINE COOLANT

32. START ENGINE AND CHECK FOR LEAKS

33. INSTALL ENGINE UNDER COVER

34. ROAD TEST VEHICLE

Check for abnormal noise, shock, slippage, correct shift points and smooth operation.

35. RECHECK ENGINE COOLANT LEVEL

ENGINE UNIT (2WD)

EM07R–05

COMPONENTS

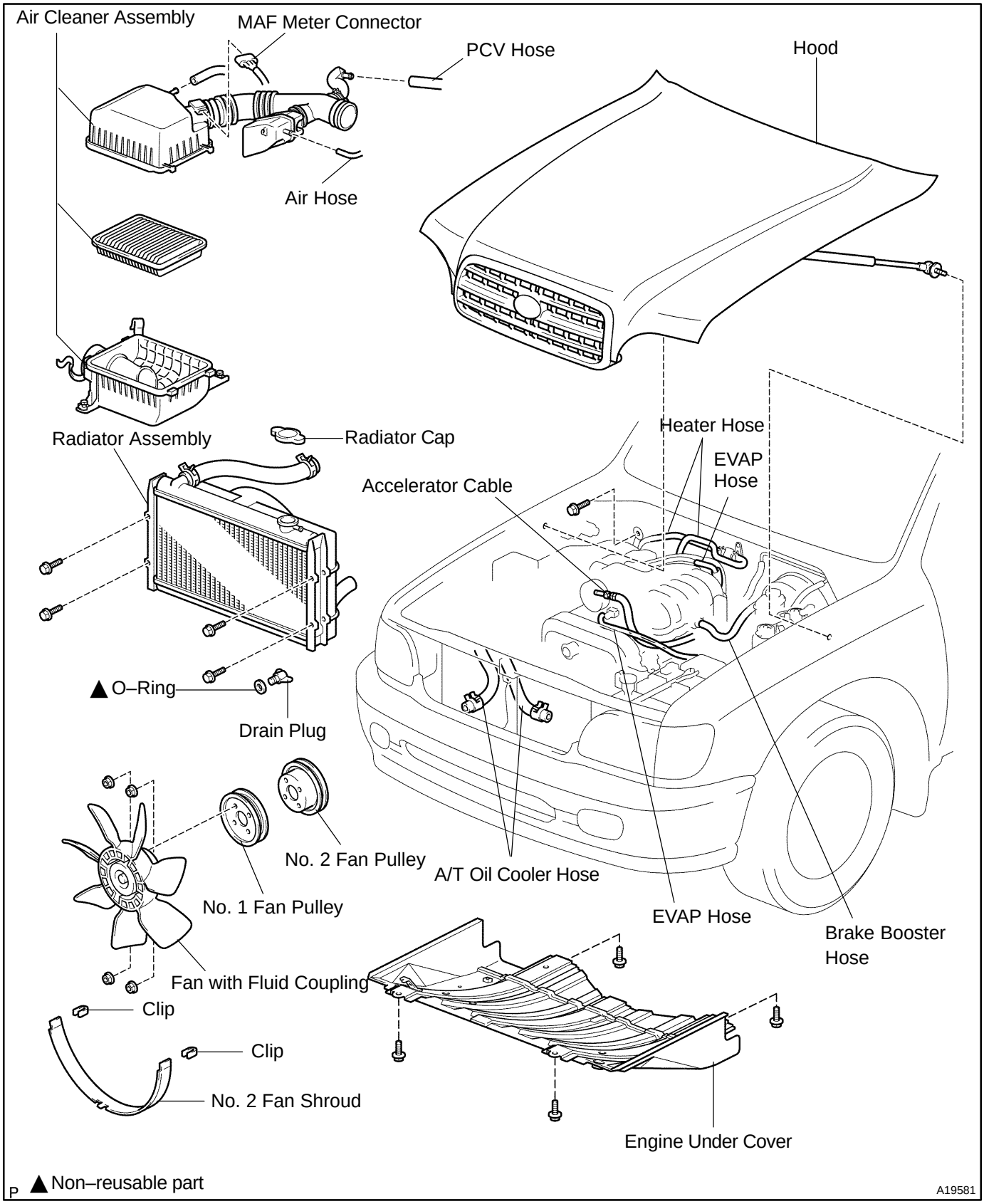

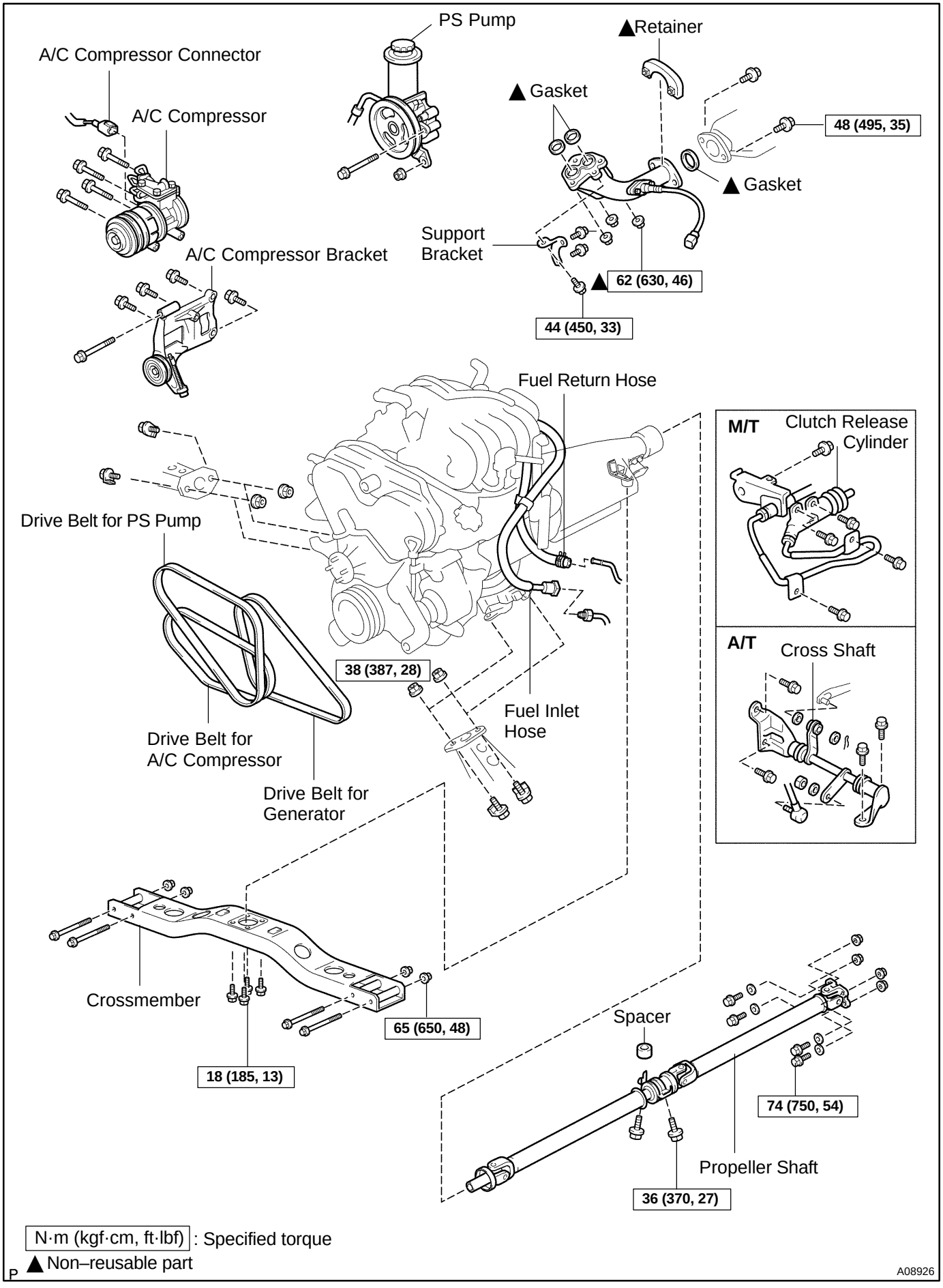
PS Pump
Retainer
A/C Compressor Connector
A/C Compressor
Gasket
48 (495, 35)
Gasket
Support Bracket
A/C Compressor Bracket
62 (630, 46)
44 (450, 33)
Fuel Return Hose
M/T
Clutch Release Cylinder
Drive Belt for PS Pump
38 (387, 28)
A/T
Cross Shaft
Fuel Inlet Hose
Drive Belt for A/C Compressor
Drive Belt for Generator
Crossmember
65 (650, 48)
18 (185, 13)
Spacer
74 (750, 54)
Propeller Shaft
36 (370, 27)
N·m (kgf·cm, ft·lbf) : Specified torque
Non–reusable part
A08926

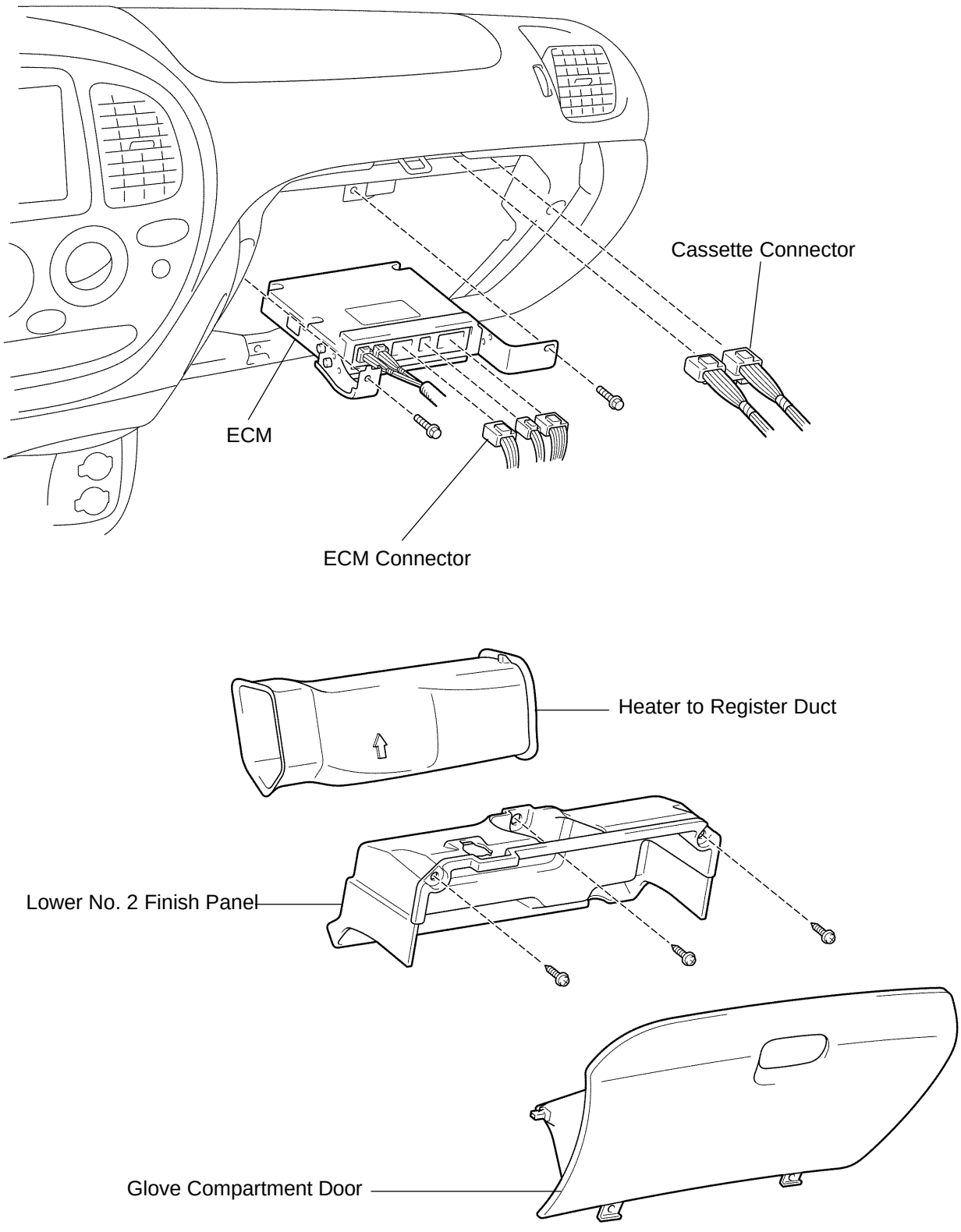
Cassette Connector
ECM
ECM Connector
Heater to Register Duct
Lower No. 2 Finish Panel
Glove Compartment Door
P
A09155

EM12J–02

REMOVAL

1. REMOVE ENGINE UNDER COVER
2. DRAIN ENGINE COOLANT AND OIL
3. DRAIN TRANSMISSION OIL
4. REMOVE HOOD
5. REMOVE RADIATOR ASSEMBLY (See page CO–1)
6. DISCONNECT HEATER HOSES
7. REMOVE FAN WITH FLUID COUPLING AND FAN PULLEYS
8. REMOVE AIR CLEANER ASSEMBLY
9. DISCONNECT ACCELERATOR CABLE

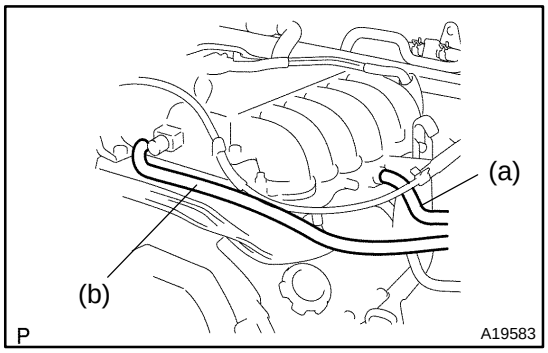

10. DISCONNECT HOSES

(a) Disconnect the brake booster vacuum hose.

(b) Disconnect the EVAP hose.

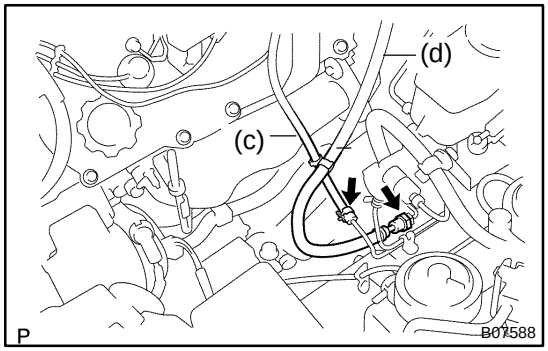

(c) Disconnect the fuel return hose.

(d) Disconnect the fuel inlet hose.

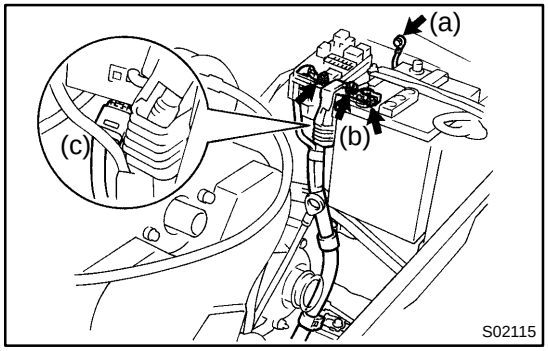

11. DISCONNECT STARTER WIRE AND CONNECTORS

(a) Remove the bolt, and disconnect the ground strap.

(b) Remove the 2 nuts, disconnect the positive (+) terminal cable from the battery.

(c) Disconnect the 2 starter wire clamps and 2 connectors.

(d) Remove the nut, and disconnect the starter wire from the relay block No. 2.

12. DISCONNECT GENERATOR WIRE

13. DISCONNECT ENGINE WIRE FROM CABIN

(a) Remove the glove compartment door.

(b) Remove the lower finish No. 2 panel.
(c) Remove the heater to register duct.
(d) Remove the 2 bolts and ECM.
(e) Disconnect the 3 ECM connectors.
(f) Disconnect the 2 cassette connectors.

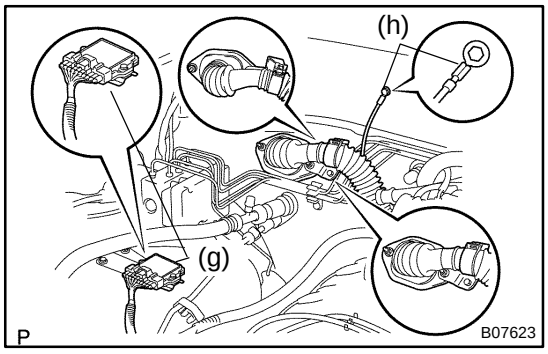

(g) Disconnect the igniter connector.
(h) Disconnect the ground strap.
(i) Disconnect the engine wire from the engine wire bracket, and remove the bolt, 2 nuts and bracket.
(j) Pull out the engine wire from the cabin.

14. M/T:
REMOVE SHIFT LEVER ASSEMBLY

(a) Remove the shift lever knob.
(b) Remove the 4 screws and shift lever boot.
(c) Remove the 6 bolts, the shift lever assembly and gasket.

15. REMOVE PROPELLER SHAFT (See page PR–3)

16. DISCONNECT SPEEDOMETER CABLE

NOTICE:
Do not lose the felt protector and washers.

17. REMOVE FRONT EXHAUST PIPE (See page EM–103)

18. M/T:
REMOVE CLUTCH RELEASE CYLINDER

Remove the 2 bolts, and disconnect the clutch clutch release cylinder.

19. PLACE JACK UNDER TRANSMISSION

20. REMOVE REAR CROSSMEMBER

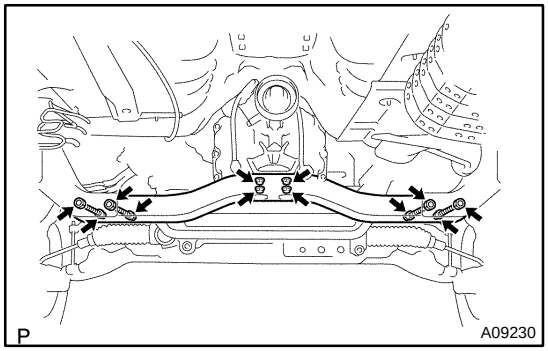

(a) Remove the 4 bolts and mounting bracket from the cross-member.
(b) Remove the 4 bolts, nuts and crossmember.

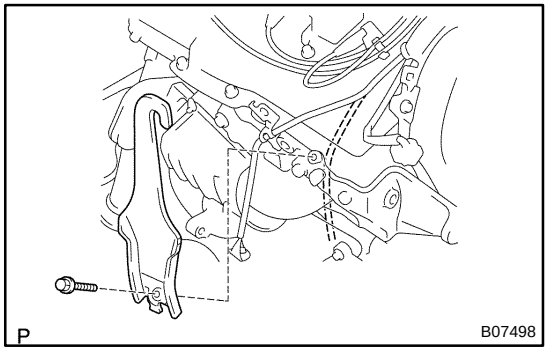

21. REMOVE ENGINE WITH TRANSMISSION

(a) Remove the bolt, and disconnect the A/C compressor wire clamp.
(b) Install a No. 2 engine hanger in the correct direction.
No. 2 engine hanger: Part No. 12282–62050
Bolt: Part No. 91512–61020
Torque: 40 N·m (400 kgf·cm, 30 ft·lbf)

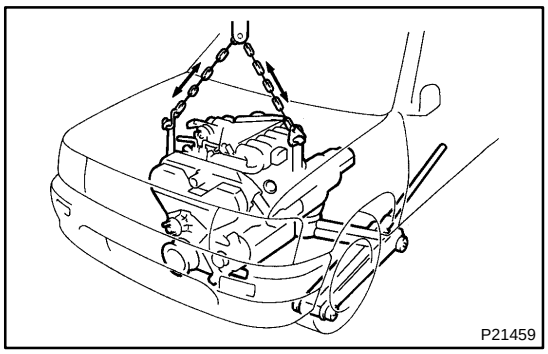

(c) Attach the engine hoist chain to the 2 engine hangers.

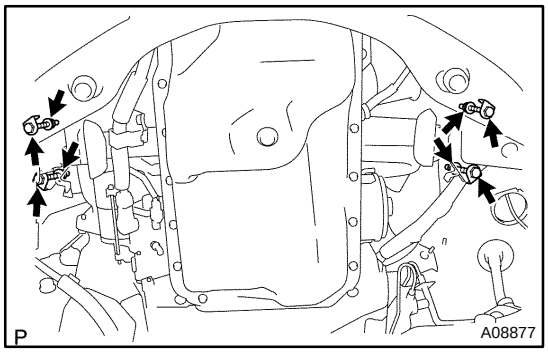

(d) Remove the 4 bolts and nuts holding the engine front mounting insulators to the frame.

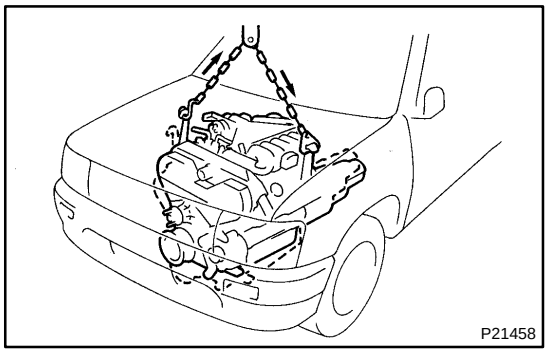

(e) Lift the engine with transmission out of the vehicle slowly and carefully.

NOTICE:

Make sure the engine is clear of all wiring and hoses.

(f) Place the engine and transmission assembly onto the stand.

22. SEPARATE ENGINE AND TRANSMISSION

EM06Y–04

INSTALLATION

1. INSTALL TRANSMISSION TO ENGINE
(A/T: See page AT–28)
(M/T: See page MT–3)

2. INSTALL ENGINE AND TRANSMISSION ASSEMBLY IN VEHICLE

(a) Attach the engine hoist chain to the engine hangers.

(b) Lower the engine and transmission assembly into the engine compartment.

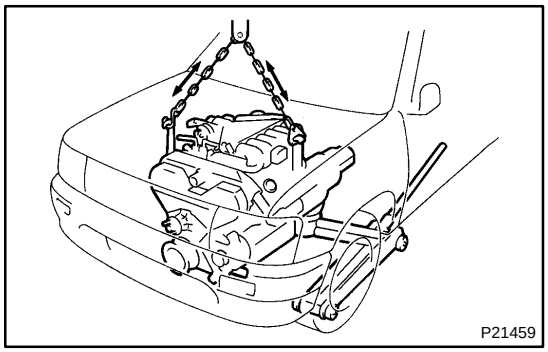

(c) Keep the engine level, and align the RH and LH mountings and body mountings.

(d) Attach the RH and LH mounting insulators to the body mountings, and temporarily install the 4 bolts and nuts.

(e) Jack up and put the transmission onto the frame.

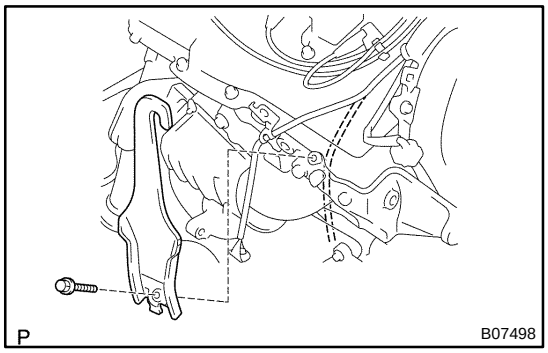

(f) Remove the engine chain hoist from the engine.

(g) Remove the 2 bolts and No. 2 engine hanger.

(h) Connect the A/C compressor wire with the bolt.

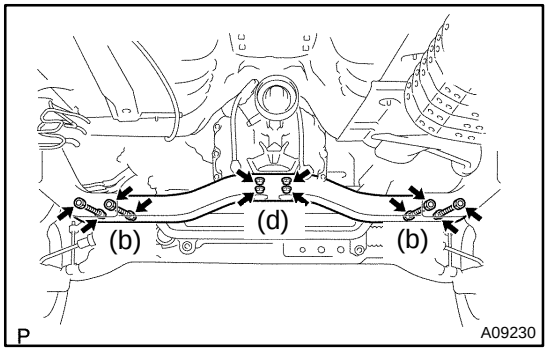

3. INSTALL ENGINE REAR CROSSMEMBER

(a) Raise the transmission slightly by raising the engine with a jack and a wooden block under the transmission.

(b) Install the 4 bolts, nuts and crossmenber.
Torque: 58 N·m (590 kgf·cm, 43 ft·lbf)

(c) Lower the transmission and rest it on the extension housing.

(d) Install the crossmember mounting bracket with the 4 bolts.
Torque: 18 N·m (185 kgf·cm, 13 ft·lbf)

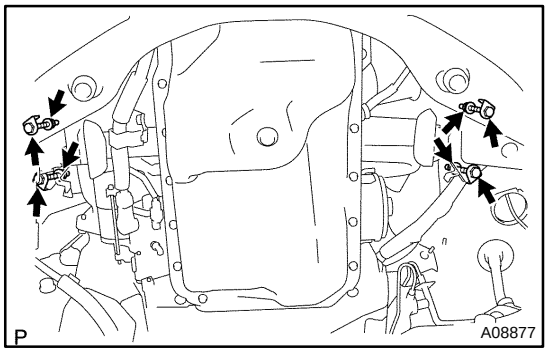

4. TIGHTEN RH AND LH ENGINE MOUNTING INSULATOR BOLTS AND NUTS

Tighten the 4 bolts and nuts holding the mounting insulators to the body mountings.
Torque: 38 N·m (387 kgf·cm, 28 ft·lbf)

5. M/T:
INSTALL CLUTCH RELEASE CYLINDER

Install the clutch release cylinder with the 2 bolts.
Torque: 12 N·m (120 kgf·cm, 9 ft·lbf)

6. INSTALL FRONT EXHAUST PIPE (See page EM–103)

7. CONNECT SPEEDOMETER CABLE

8. INSTALL PROPELLER SHAFT (See page PR–8)

9. M/T:

INSTALL SHIFT LEVER ASSEMBLY

(a) Install a new gasket and the shift lever assembly with the 6 bolts.

(b) Install the shift lever boot with the 4 screws.

(c) Install the shift lever knob.

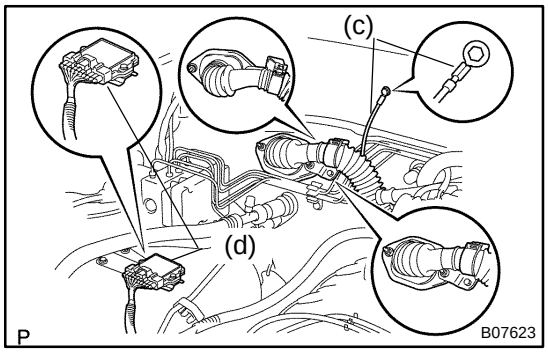

10. CONNECT ENGINE WIRE TO CABIN

(a) Push in the engine wire through the cowl panel.

(b) Install the bolt and 2 nuts.

(c) Connect the ground strap.

(d) Connect the igniter connector.

(e) Connect the 3 ECM connectors.

(f) Connect the 2 cassette connectors.

(g) Install the ECM with the 2 bolts.

(h) Install the heater to register duct.

(i) Install the lower finish No. 2 panel.

(j) Install the glove compartment door.

11. CONNECT GENERATOR WIRE (See page CH–15)

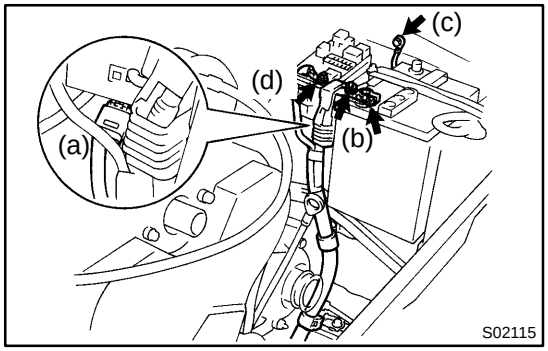

12. CONNECT STARTER WIRE AND CONNECTOR

(a) Connect the 2 starter wire clamps and connector.

(b) Connect the positive (+) terminal cable to the battery with the 2 nuts.

(c) Connect the ground strap with the bolt.

(d) Connect the stater wire to the relay block No. 2 with the nut.

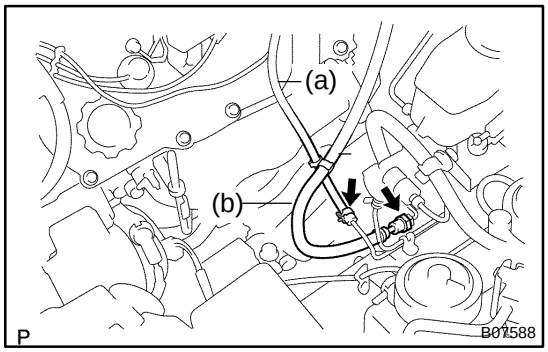

13. CONNECT HOSES

(a) Connect the fuel return hose.

(b) Connect the fuel inlet hose (See page SF–1).

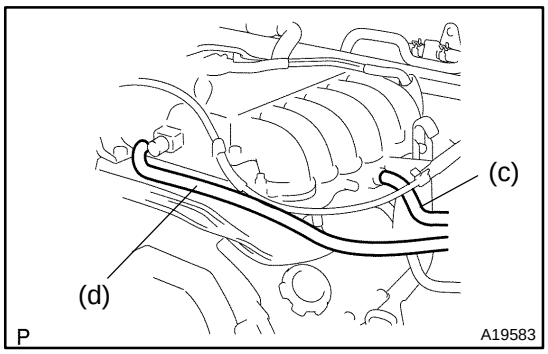

(c) Connect the brake booster vacuum hose.
(d) Connect the EVAP hose.
(e) Connect the heater hoses.

14. CONNECT ACCELERATOR CABLE
15. INSTALL FAN WITH FLUID COUPLING AND FAN PULLEYS
16. INSTALL RADIATOR ASSEMBLY (See page CO–24)
17. INSTALL AIR CLEANER ASSEMBLY
18. FILL WITH ENGINE OIL AND COOLANT
19. FILL TRANSMISSION OIL
20. START ENGINE AND CHECK FOR LEAKS
21. INSTALL ENGINE UNDER COVER
22. INSTALL HOOD
23. ROAD TEST VEHICLE

Check for abnormal noise, shock, slippage, correct shift points and smooth operation.

24. RECHECK ENGINE COOLANT AND ENGINE OIL LEVELS

ENGINE UNIT (4WD)

EM07S–03

COMPONENTS

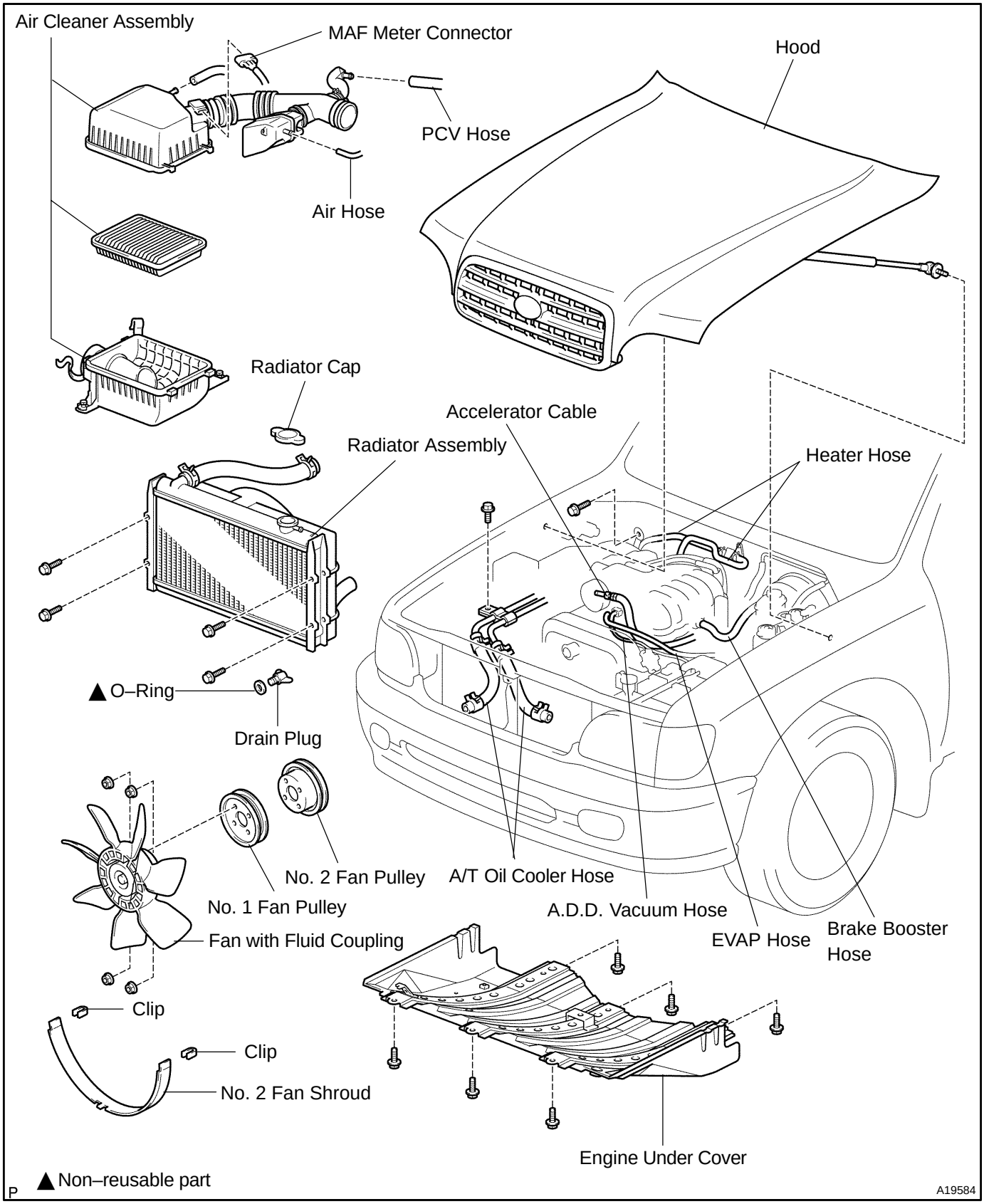

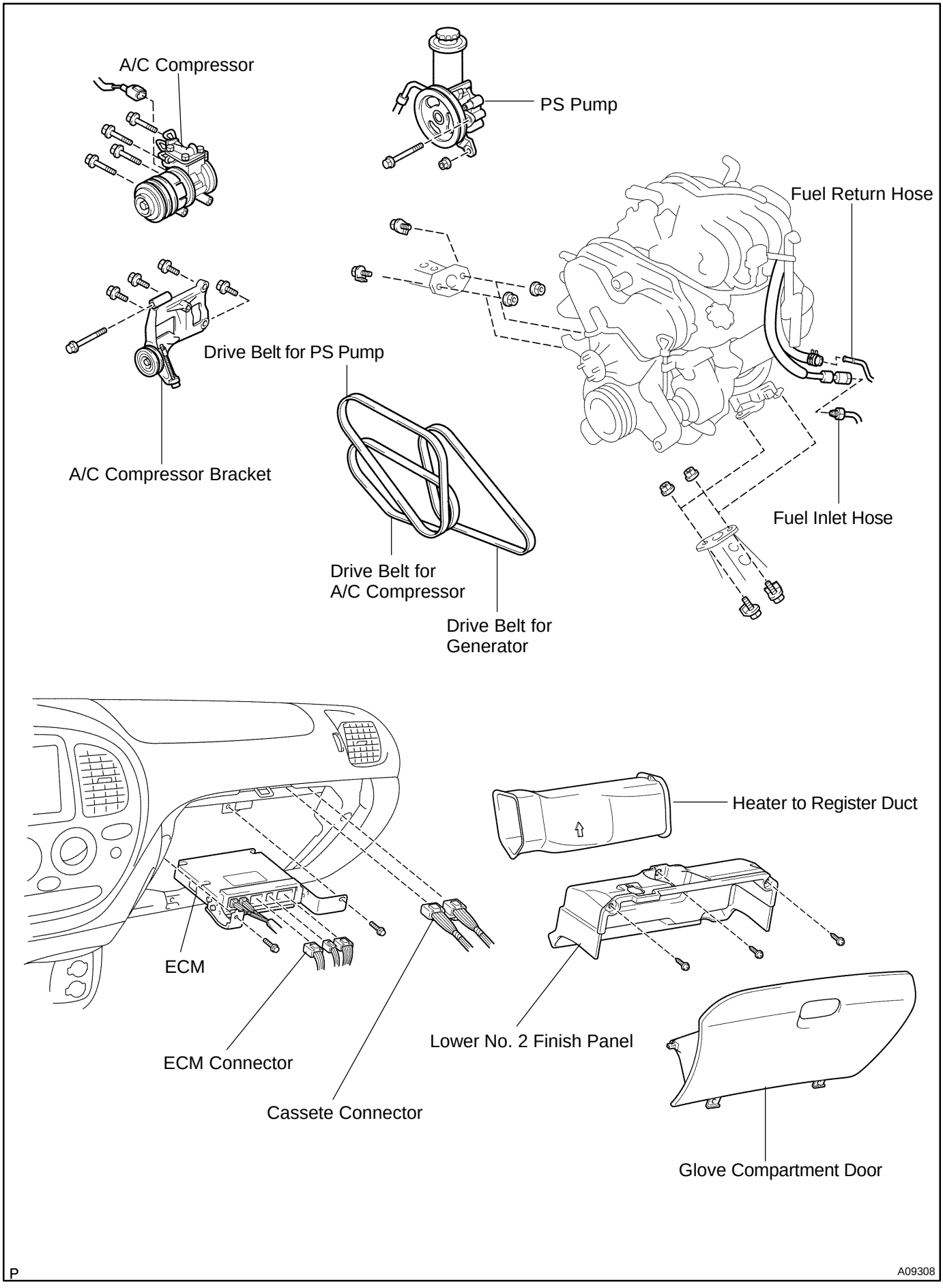
A/C Compressor
PS Pump
Fuel Return Hose
Drive Belt for PS Pump
A/C Compressor Bracket
Fuel Inlet Hose
Drive Belt for
A/C Compressor
Drive Belt for
Generator
Heater to Register Duct
ECM
ECM Connector
Cassete Connector
Lower No. 2 Finish Panel
Glove Compartment Door
P
A09308

EM12K–02

REMOVAL

1. REMOVE ENGINE UNDER COVER
2. REMOVE TRANSMISSION (See page MT–3)
3. DRAIN ENGINE COOLANT
4. DRAIN ENGINE OIL
5. REMOVE HOOD
6. REMOVE AIR CLEANER CAP, MAF METER AND RESONATOR
7. REMOVE AIR CLEANER ASSEMBLY
8. REMOVE RADIATOR ASSEMBLY (See page CO–19)
9. REMOVE FAN WITH FLUID COUPLING AND FAN PULLEYS (See page EM–14)
10. REMOVE A/C COMPRESSOR BRACKET
11. DISCONNECT ACCELERATOR CABLE
12. DISCONNECT HEATER HOSES

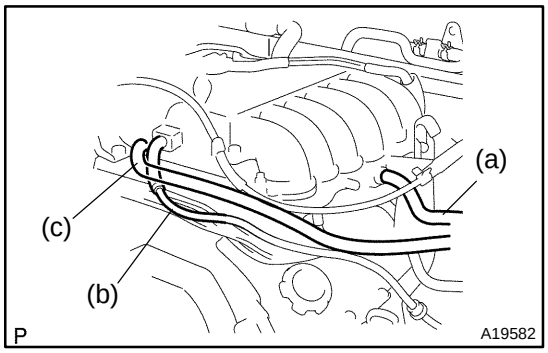

13. DISCONNECT HOSES

(a) Disconnect the brake booster vacuum hose.
(b) Disconnect the A.D.D. vacuum hose.
(c) Disconnect the EVAP hose.

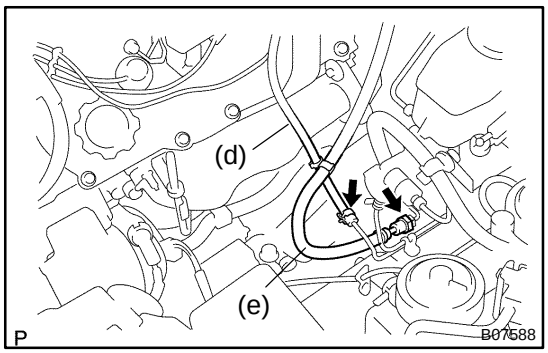

(d) Disconnect the fuel return hose.
(e) Disconnect the fuel inlet hose.

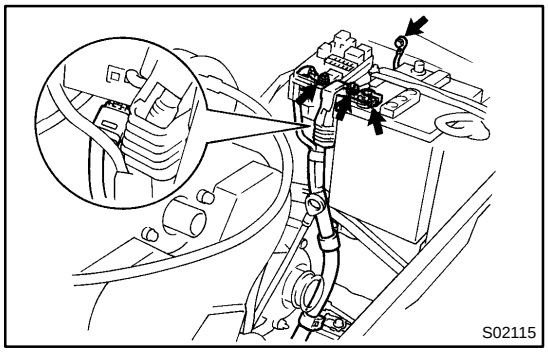

14. DISCONNECT STARTER WIRE AND CONNECTORS

(a) Remove the bol,t and disconnect the ground strap.
(b) Remove the 2 nut, and disconnect the positive (+) terminal cable from the battery.
(c) Disconnect the 3 starter wire clamps and connector.
(d) Disconnect the stater wire with the nut from the relay block No. 2.

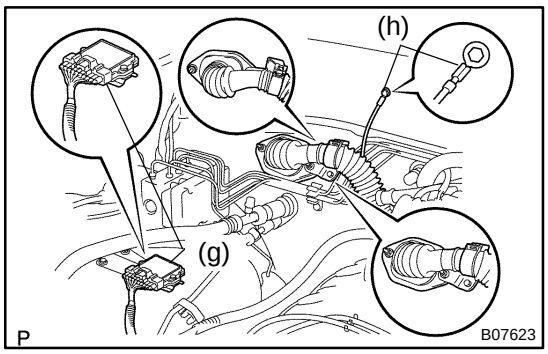

15. DISCONNECT ENGINE WIRE FROM CABIN

(a) Remove the glove compartment door.
(b) Remove the lower finish No. 2 panel.
(c) Remove the heater to register duct.
(d) Remove the 2 bolts and ECM.
(e) Disconnect the 3 ECM connectors.
(f) Disconnect the 2 cassette connectors.
(g) Disconnect the igniter connector.
(h) Disconnect the ground strap.
(i) Remove the bolt and 2 nuts.
(j) Pull out the engine wire from the cabin.

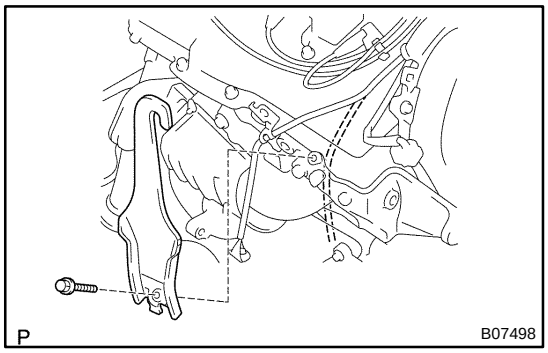

16. REMOVE ENGINE

(a) Remove the bolt, and disconnect the A/C compressor wire clamp.
(b) Install a engine hanger No.2 in the correct direction.
No. 2 engine hanger: Part No. 12282–62050
Bolt: Part No. 91512–61020

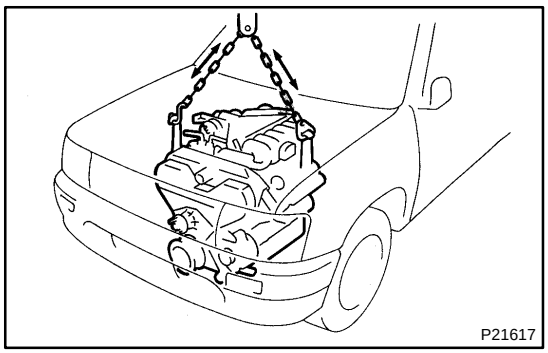

(c) Attach the engine hoist chain to the 2 engine hangers.

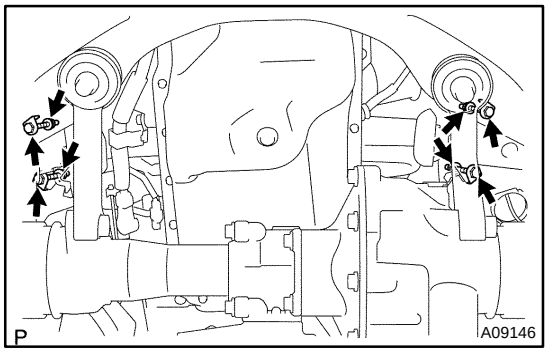

(d) Remove the 4 bolts and nuts holding the engine front mounting insulators to the frame.

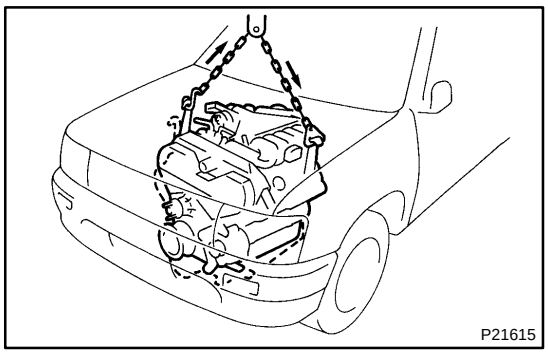

(e) Lift the engine out of the vehicle slowly and carefully.

NOTICE:

Make sure the engine is clear of all wiring and hoses.

(f) Place the engine assembly onto the stand.

EM1UZ–01

INSTALLATION

1. INSTALL ENGINE ASSEMBLY IN VEHICLE

(a) Attach the engine hoist chain to the engine hangers.
(b) Lower the engine assembly into the engine compartment.
(c) Keep the engine level, and align the RH, LH mountings and body mountings.
(d) Attach the RH and LH mounting insulators to the body mountings, and temporarily install the 4 bolts and nuts.
(e) Remove the engine chain hoist from the engine.

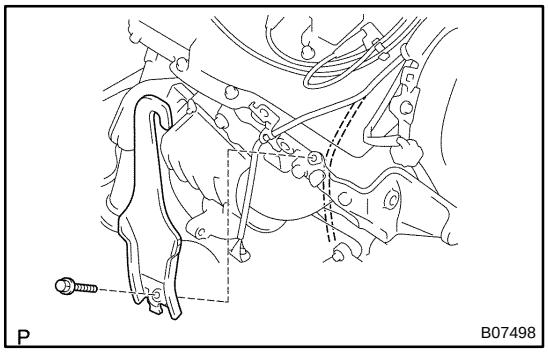

(f) Remove the bolt and No. 2 engine hanger.
(g) Install the bolt and connect the A/C compressor wire.

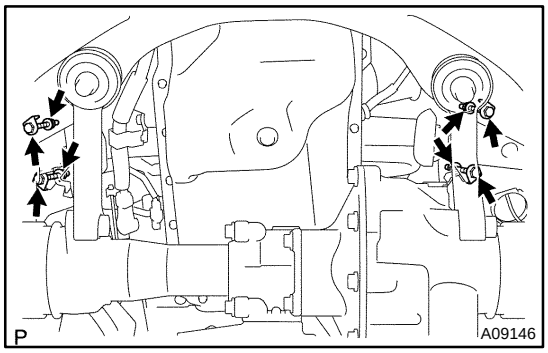

2. TIGHTEN RH AND LH ENGINE MOUNTING INSULATOR BOLTS AND NUTS

Tighten the 4 bolts and nuts holding the mounting insulators to the body mountings.

Torque: 38 N·m (385 kgf·cm, 28 ft·lbf)

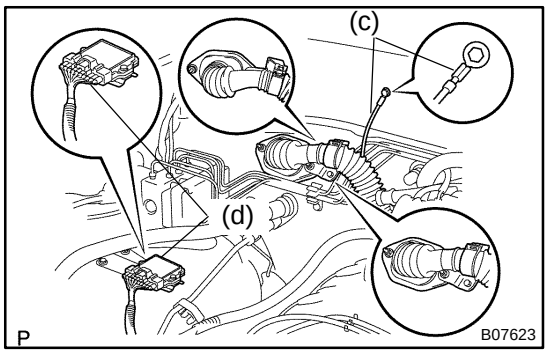

3. CONNECT ENGINE WIRE TO CABIN

(a) Push in the engine wire through the cowl panel.
(b) Install the engine wire bracket with the bolt and 2 nuts, and connect the wire to the bracket.
(c) Connect the ground strap.
(d) Connect the igniter connector.
(e) Connect the 3 ECM connectors.
(f) Connect the 2 cassette connectors.
(g) Install the ECM with the 2 bolts.
(h) Install the heter to register duct.
(i) Install the lower finish No. 2 panel.
(j) Install the glove compartment door.

4. CONNECT GENERATOR WIRE (See page CH–15)

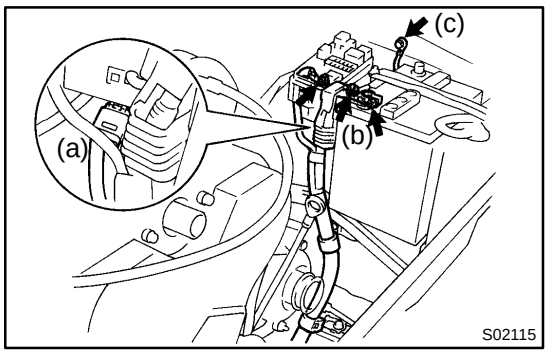

5. CONNECT STARTER WIRE AND CONNECTOR

(a) Connect the 3 starter wire clamps and connector.
(b) Connect the positive (+) terminal cable to the battery with the 2 nuts.
(c) Connect the ground strap with the bolt.
(d) Connect the stater wire with the nut to the relay block No. 2.

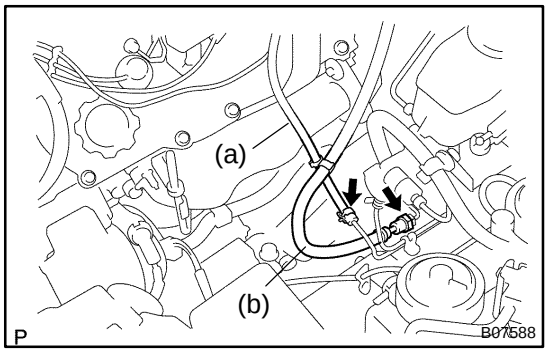

6. CONNECT HOSES

(a) Connect the fuel return hose.
(b) Connect the fuel inlet hose.

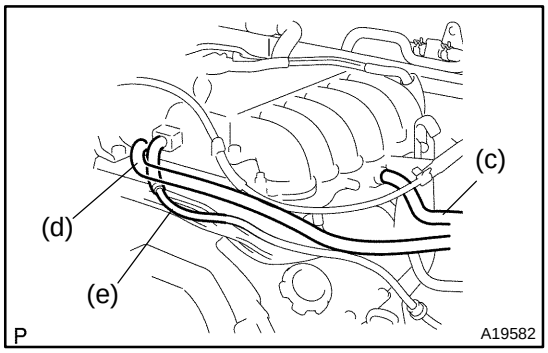

(c) Connect the brake booster vacuum hose.
(d) Connect the EVAP hose.
(e) Connect the A.D.D. vacuum hose.
(f) Connect the heater hoses.

7. CONNECT HEATER HOSES

8. CONNECT ACCELERATOR CABLE:

9. INSTALL A/C COMPRESSOR BRACKET

10. INSTALL FAN WITH FLUID COUPLING AND FAN PULLEYS (See page EM–20)

11. INSTALL RADIATOR ASSEMBLY (See page CO–24)

12. INSTALL AIR CLEANER CASE AND AIR FILTER

13. INSTALL MAF METER, RESONATOR AND AIR CLEANER CAP

14. FILL WITH ENGINE OIL

15. FILL WITH ENGINE COOLANT

16. INSTALL ENGINE UNDER COVER

17. INSTALL TRANSMISSION (See page MT–3)

18. INSTALL HOOD

19. PERFORM ROAD TEST

Check for abnormal noise, shock, slippage, correct shift points and smooth operation.

20. RECHECK ENGINE COOLANT AND ENGINE OIL LEVELS

CYLINDER BLOCK

COMPONENTS

EM12M–01

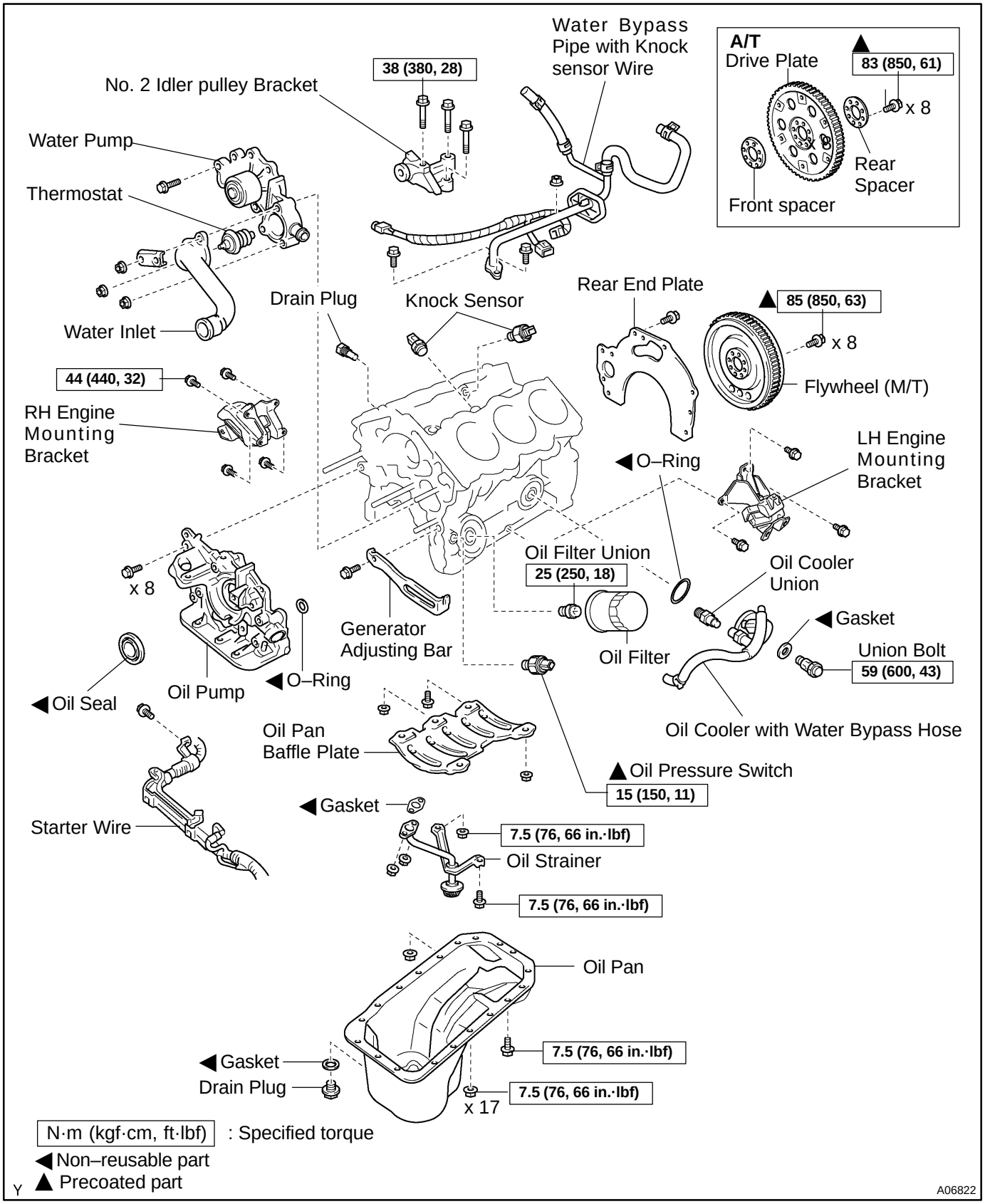

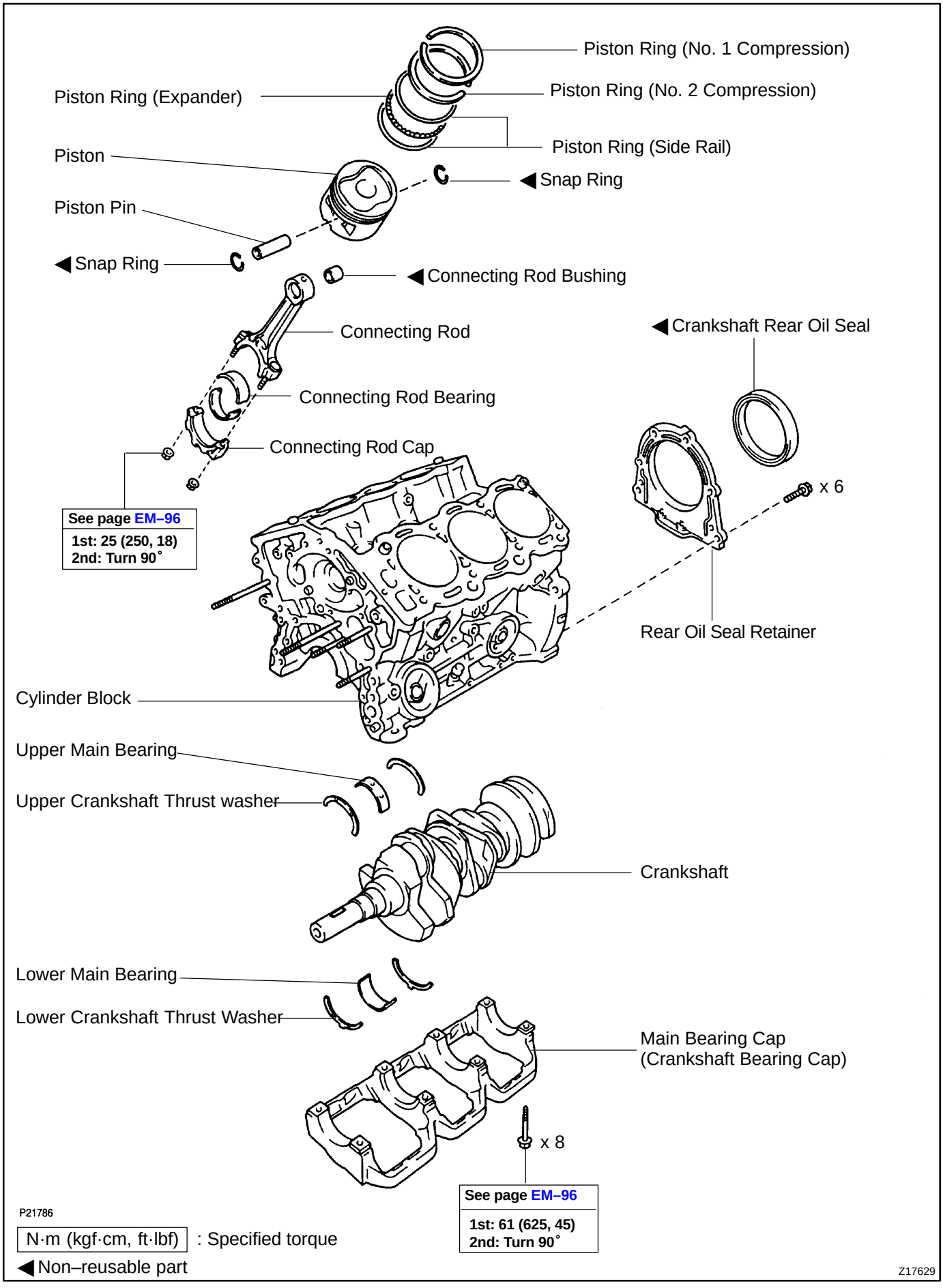
Piston Ring (No. 1 Compression)
Piston Ring (Expander)
Piston Ring (No. 2 Compression)
Piston Ring (Side Rail)
Piston
◀ Snap Ring
Piston Pin
◀ Snap Ring
◀ Connecting Rod Bushing
Connecting Rod
◀ Crankshaft Rear Oil Seal
Connecting Rod Bearing
Connecting Rod Cap
x 6
See page EM–96
1st: 25 (250, 18)
2nd: Turn 90°
Rear Oil Seal Retainer
Cylinder Block
Upper Main Bearing
Upper Crankshaft Thrust washer
Crankshaft
Lower Main Bearing
Lower Crankshaft Thrust Washer
Main Bearing Cap
(Crankshaft Bearing Cap)
x 8
See page EM–96
1st: 61 (625, 45)
2nd: Turn 90°
P21786
N·m (kgf·cm, ft·lbf) : Specified torque
◀ Non–reusable part
Z17629

EM07V–02

DISASSEMBLY

1. **M/T:**
   REMOVE FLYWHEEL
2. **A/T:**
   REMOVE DRIVE PLATE
3. **REMOVE REAR END PLATE**

Remove the bolt and end plate.

4. **INSTALL ENGINE TO ENGINE STAND FOR DISASSEMBLY**
5. **REMOVE TIMING BELT AND PULLEYS (See page EM–14)**
6. **REMOVE CYLINDER HEADS (See page EM–31)**

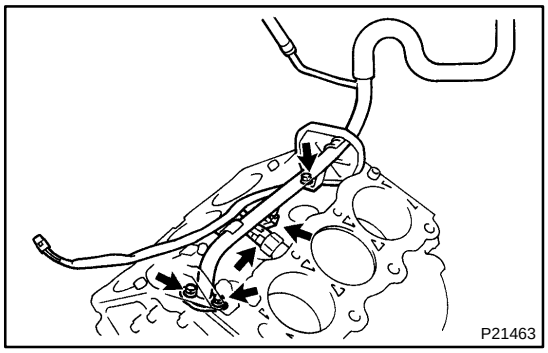

7. **REMOVE WATER BYPASS PIPE WITH KNOCK SENSOR WIRE**

(a) Disconnect the 2 knock sensor connectors.
(b) Remove the 2 bolts, nut and water bypass pipe.

8. **REMOVE NO. 2 IDLER PULLEY BRACKET**

Remove the 3 bolts and idler pulley bracket.

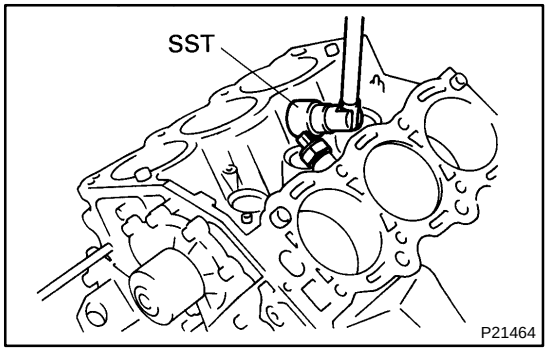

9. **REMOVE KNOCK SENSORS**

Using SST, remove the 2 knock sensors.
SST 09817–16011

10. **REMOVE WATER PUMP (See page CO–6)**
11. **REMOVE GENERATOR ADJUSTING BAR**

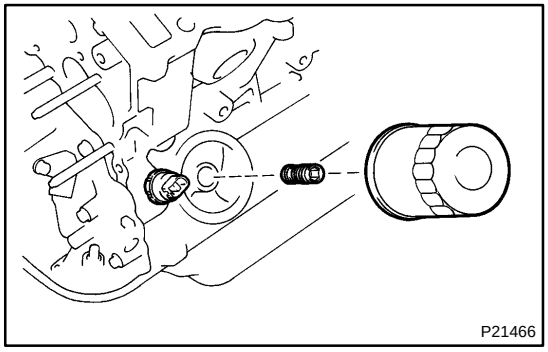

12. **REMOVE OIL FILTER AND OIL FILTER UNION**

(a) Using SST, remove the oil filter.
SST 09228–07501
(b) Using 12 mm hexagon wrench, remove the union.

13. **REMOVE OIL PRESSURE SWITCH**

Using SST, remove the oil pressure switch.
SST 09816–30010

14. **REMOVE RH AND LH ENGINE MOUNTING BRACKETS**
15. **REMOVE COOLANT DRAIN COCK**

16. w/o Oil Cooler:
REMOVE OIL HOLE COVER PLATE

17. w/ Oil Cooler:
REMOVE OIL COOLER WITH WATER BYPASS HOSE AND OIL COOLER UNION (See page LU–19)

18. REMOVE OIL PUMP (See page LU–9)

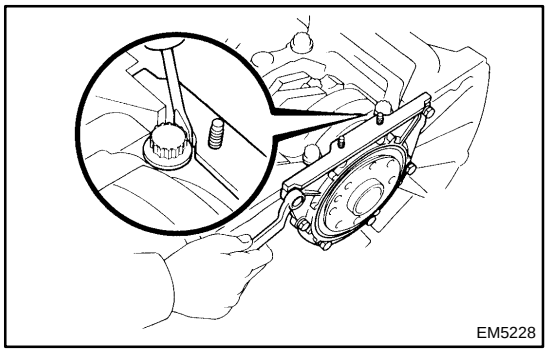

19. REMOVE REAR OIL SEAL RETAINER

(a) Remove the 6 bolts.

(b) Using a screwdriver, remove the oil seal retainer by prying the portion between the oil seal retainer and main bearing cap.

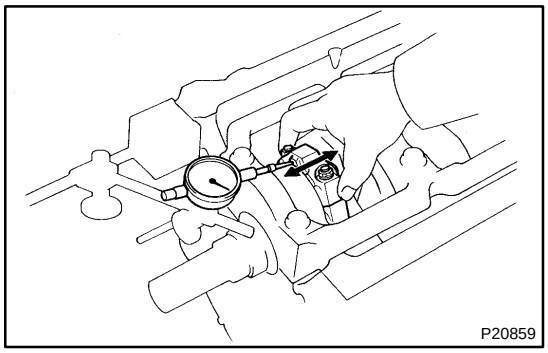

20. CHECK CONNECTING ROD THRUST CLEARANCE

Using a dial indicator, measure the thrust clearance while moving the connecting rod back and forth.

Standard thrust clearance:
0.150 – 0.330 mm (0.0059 – 0.0130 in.)
Maximum thrust clearance: 0.38 mm (0.0150 in.)

If the thrust clearance is greater than maximum, replace the connecting rod assembly. If necessary, replace the crankshaft.

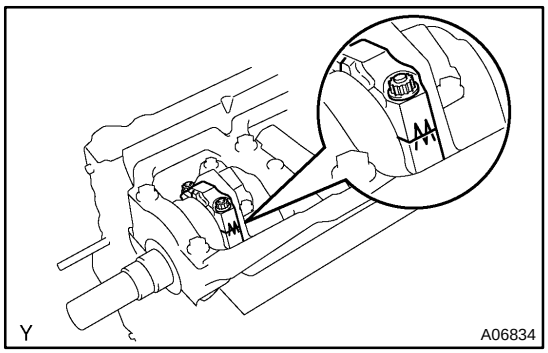

21. REMOVE CONNECTING ROD CAPS AND CHECK OIL CLEARANCE

(a) Check the matchmarks on the connecting rod and cap are aligned to ensure correct order.

(b) Remove the 2 connecting rod cap nuts.

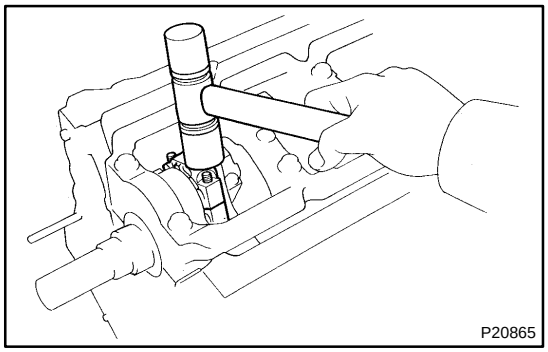

(c) Using a plastic–faced hammer, lightly tap the connecting rod bolts and lift off the connecting rod cap.

HINT:
Keep the lower bearing inserted with the connecting rod cap.

(d) Cover the connecting rod bolts with a short piece of hose to protect the crankshaft from damage.

(e) Clean the crank pin and bearing.

(f) Check the crank pin and bearing for peeling and scratches.

If the crank pin or bearing is damaged, replace the bearings. If necessary, grind or replace the crankshaft.

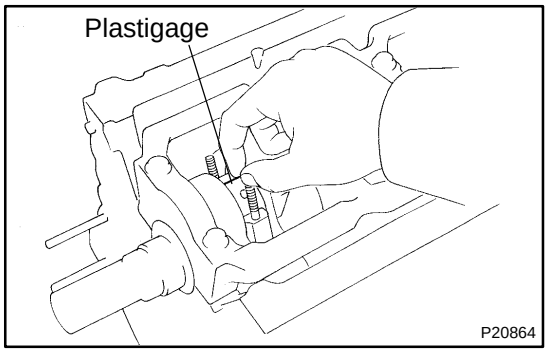

(g) Lay a strip of Plastigage across the crank pin.

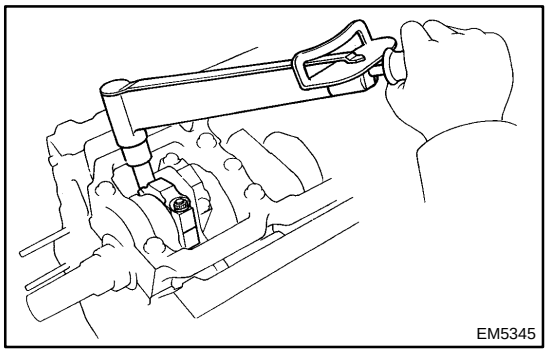

(h) Install the connecting rod cap with the 2 nuts (See page EM–96).

NOTICE:

Do not turn the crankshaft.

(i) Remove the 2 nuts and connecting rod cap (See procedure (b) and (c) above).

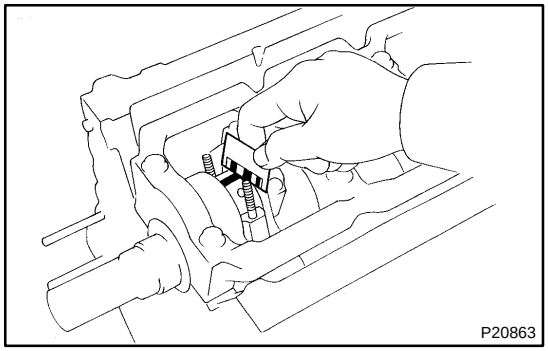

(j) Measure the Plastigage at its widest point.

Standard oil clearance:

STD	0.024 – 0.053 mm (0.0009 – 0.0021 in.)
U/S 0.25	0.023 – 0.069 mm (0.0009 – 0.0027 in.)

Maximum oil clearance: 0.08 mm (0.0031 in.)

If the oil clearance is greater than maximum, replace the bearings. If necessary, grind or replace the crankshaft.

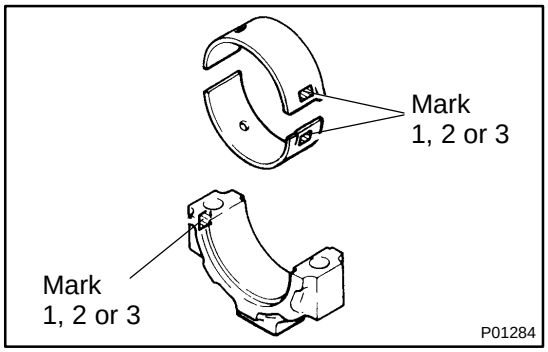

HINT:

If using a standard bearing, replace with one having the same number marked on the connecting rod cap. There are 3 sizes of standard bearings, marked 1, 2 and 3 accordingly.

Reference

Standard bearing center wall thickness:

Mark 1	1.484 – 1.488 mm (0.0584 – 0.0586 in.)
Mark 2	1.488 – 1.492 mm (0.0586 – 0.0587 in.)
Mark 3	1.492 – 1.496 mm (0.0587 – 0.0589 in.)

(k) Completely remove the Plastigage.

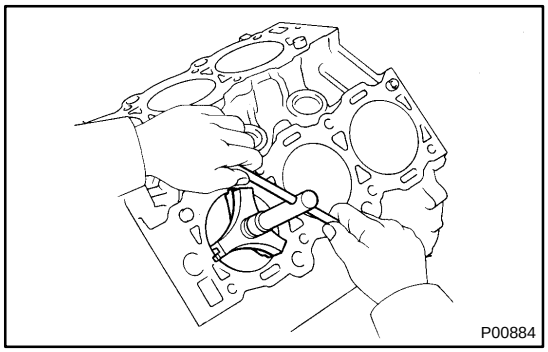

22. REMOVE PISTON AND CONNECTING ROD ASSEMBLIES

(a) Using a ridge reamer, remove the all carbon from the top of the cylinder.

(b) Cover the connecting rod bolts with a short piece of hose to protect the crankshaft from damage.

(c) Push the piston, connecting rod assembly and upper bearing through the top of the cylinder block.

HINT:

▲ Keep the bearings, connecting rod and cap together.

▲ Arrange the piston and connecting rod assemblies in correct order.

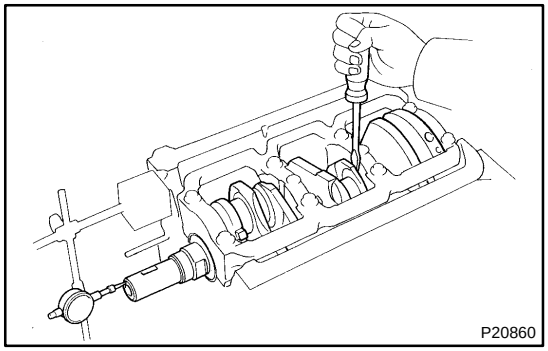

23. CHECK CRANKSHAFT THRUST CLEARANCE

Using a dial indicator, measure the thrust clearance while prying the crankshaft back and forth with a screwdriver.

Standard thrust clearance:
0.020 – 0.220 mm (0.0008 – 0.0087 in.)
Maximum thrust clearance: 0.30 mm (0.0118 in.)

If the thrust clearance is greater than maximum, replace the thrust washers as a set.

Thrust washer thickness:
2.440 – 2.490 mm (0.0961 – 0.0980 in.)

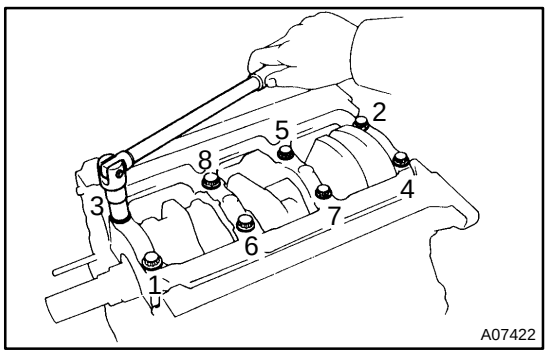

24. REMOVE MAIN BEARING CAP AND CHECK OIL CLEARANCE

(a) Uniformly loosen and remove the main bearing cap bolts, in several passes, in the sequence shown.

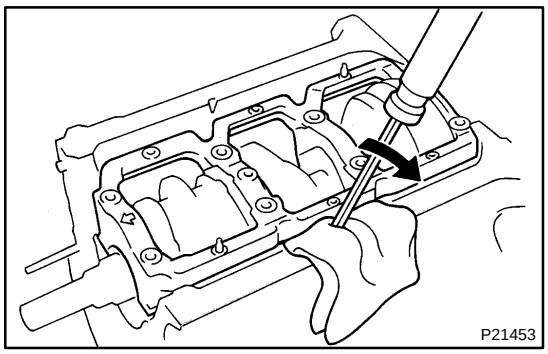

(b) Using a screwdriver, pry up the main bearing cap, and remove the main bearing cap, lower main bearings and lower thrust washers (No.2 journal position of main bearing cap only).

HINT:

Keep the lower main bearings and lower thrust washers together with the main bearing cap.

(c) Lift out the crankshaft.

HINT:

Keep the upper main bearings and upper thrust washers together with the cylinder block.

(d) Clean each main journal and bearing.

(e) Check each main journal and bearing for pitting and scratches.

If the journal or bearing is damaged, replace the bearings. If necessary, grind or replace the crankshaft.

(f) Place the crankshaft on the cylinder block.

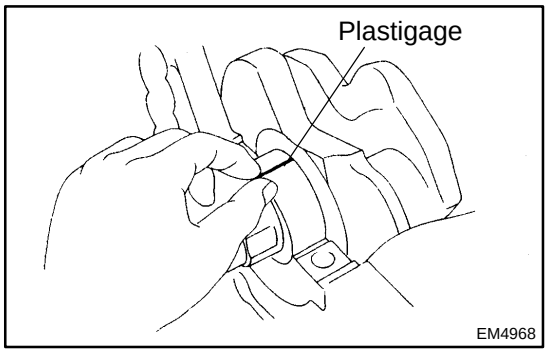

(g) Lay a strip of plasting across each journal.

(h) Install the main bearing cap with the 8 bolts (See page EM–96).

NOTICE:

Do not turn the crankshaft.

(i) Remove the 8 bolts and main bearing cap (See procedure (a) and (b) above).

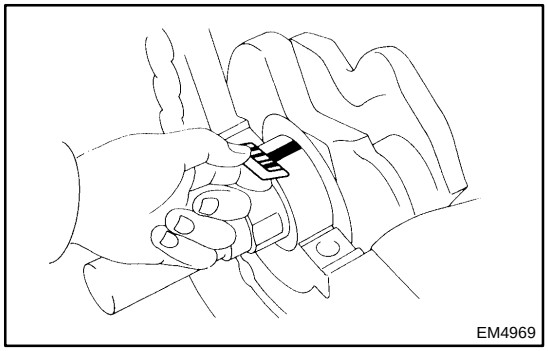

(j) Measure the Plastigage at its widest point.

Standard clearance:

No. 1

STD	0.020 – 0.038 mm (0.0008 – 0.0015 in.)
U/S 0.25	0.019 – 0.059 mm (0.0007 – 0.0023 in.)

Others

STD	0.024 – 0.042 mm (0.0009 – 0.0017 in.)
U/S 0.25	0.023 – 0.063 mm (0.0009 – 0.0025 in.)

Maximum clearance: 0.08 mm (0.0031 in.)

HINT:

If replacing the cylinder block subassembly, the bearing standard clearance will be:

No. 1

0.010 – 0.049 mm (0.0004 – 0.0020 in.)

Others

0.014 – 0.053 mm (0.0006 – 0.0021 in.)

If the oil clearance is greater than maximum, replace the bearings. If necessary, grind or replace the crankshaft.

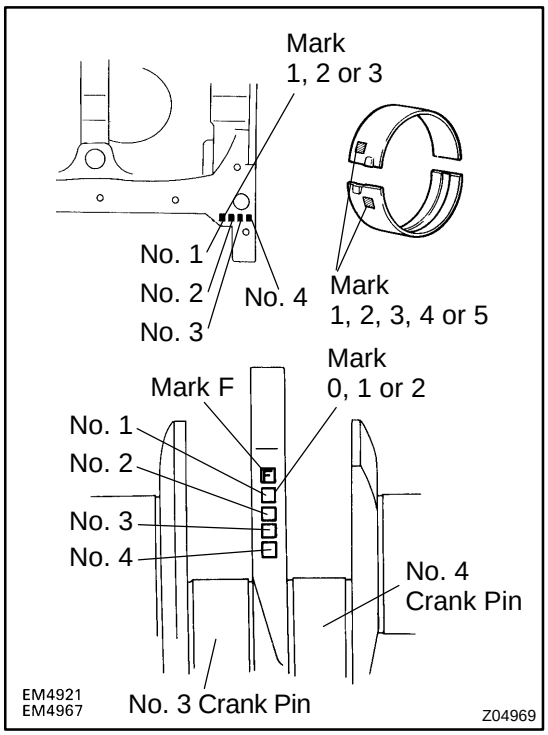

HINT:

If using a standard bearing, replace with one having the same number. If the number of the bearing cannot be determined, select the correct bearing by adding together the numbers imprinted on the cylinder block and crankshaft, then selecting the bearing with the same number as the total. There are 5 sizes of standard bearings, marked 1, 2, 3, 4 and 5 accordingly.

	Number marked								
Cylinder block	1			2			3		
Crankshaft	0	1	2	0	1	2	0	1	2
Use bearing	1	2	3	2	3	4	3	4	5

EXAMPLE: Cylinder block ”2” + Crankshaft ”1”
= Total number 3 (Use bearing ”3”)

Reference

Standard sized bearing center wall thickness:

No. 1

Mark 1	1.991 – 1.994 mm (0.0784 – 0.0785 in.)
Mark 2	1.994 – 1.997 mm (0.0785 – 0.0786 in.)
Mark 3	1.997 – 2.000 mm (0.0786 – 0.0787 in.)
Mark 4	2.000 – 2.003 mm (0.0787 – 0.0789 in.)
Mark 5	2.003 – 2.006 mm (0.0789 – 0.0790 in.)

Others

Mark 1	1.989 – 1.992 mm (0.0783 – 0.0784 in.)
Mark 2	1.992 – 1.995 mm (0.0784 – 0.0785 in.)
Mark 3	1.995 – 1.998 mm (0.0785 – 0.0787 in.)
Mark 4	1.998 – 2.001 mm (0.0787 – 0.0788 in.)
Mark 5	2.001 – 2.004 mm (0.0788 – 0.0789 in.)

Cylinder block main journal bore diameter:

Mark 1	68.010 – 68.016 mm (2.6776 – 2.6778 in.)
Mark 2	68.016 – 68.022 mm (2.6778 – 2.6780 in.)
Mark 3	68.022 – 68.028 mm (2.6780 – 2.6783 in.)

Crankshaft main journal diameter:

Mark 0	63.996 – 64.000 mm (2.5195 – 2.5197 in.)
Mark 1	63.990 – 63.996 mm (2.5193 – 2.5195 in.)
Mark 2	63.985 – 63.990 mm (2.5191 – 2.5193 in.)

(k) Completely remove the Plastigage.

25. REMOVE CRANKSHAFT

(a) Lift out the crankshaft.

(b) Remove the upper main bearings and upper thrust washers from the cylinder block.

HINT:

Arrange the main bearings and thrust washers in correct order.

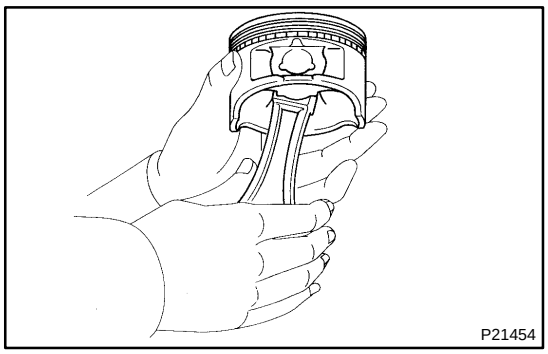

26. CHECK FIT BETWEEN PISTON AND PISTON PIN

Try to move the piston back and forth on the piston pin.
If any movement is felt, replace the piston and pin as a set.

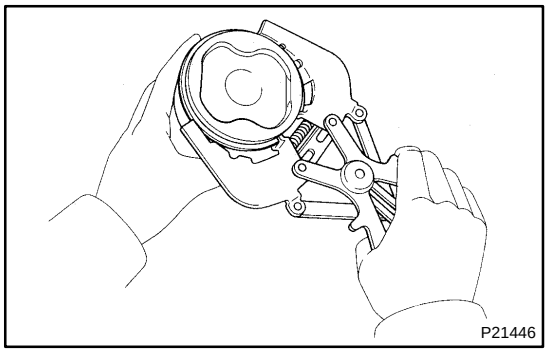

27. REMOVE PISTON RINGS

(a) Using a piston ring expander, remove the 2 compression rings.
(b) Remove the 2 side rails and oil ring by hand.

HINT:
Arrange the piston rings in the correct order only.

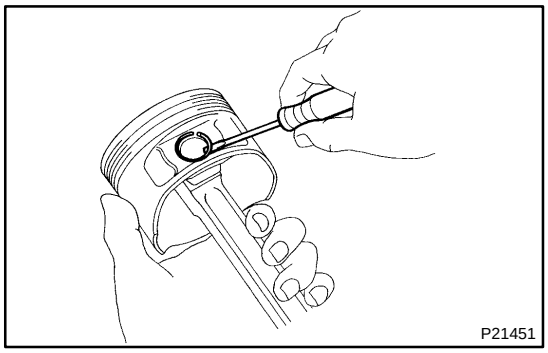

28. DISCONNECT CONNECTING ROD FROM PISTON

(a) Using a small screwdriver, pry out the 2 snap rings.
(b) Gradually heat the piston to about 60˚C (140˚F).

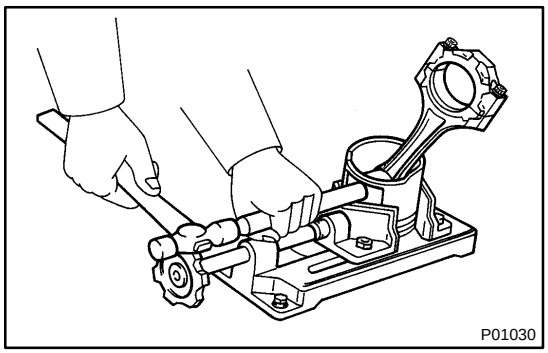

(c) Using a plastic–faced hammer and brass bar, lightly tap out the piston pin and remove the connecting rod.

HINT:

- ▲ The piston and pin are a matched set.
- ▲ Arrange the pistons, pins, rings, connecting rods and bearings in the correct order.

EM1V2–01

INSPECTION

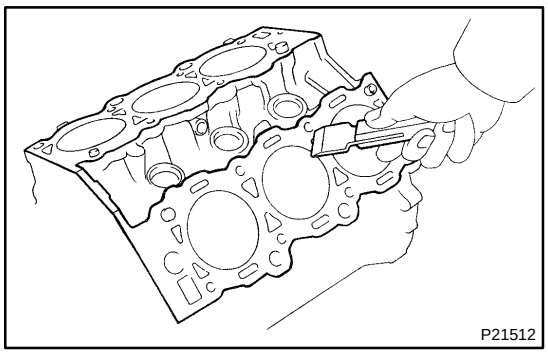

1. CLEAN CYLINDER BLOCK

(a) Remove the gasket material.
Using a gasket scraper, remove all the gasket material from the top surface of the cylinder block.

(b) Clean the cylinder block.
Using a soft brush and solvent, thoroughly clean the cylinder block.

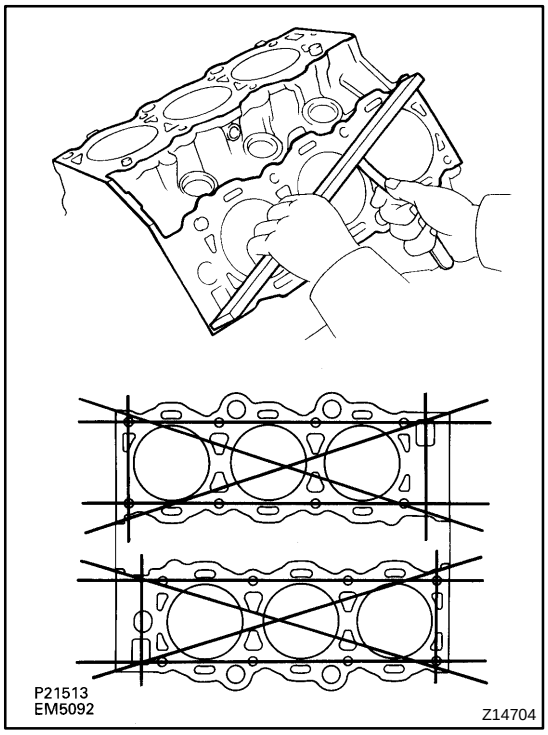

2. INSPECT CYLINDER BLOCK

(a) Inspect for flatness.
Using a precision straight edge and feeler gauge, measure the surfaces contacting the cylinder head gasket for warpage.
Maximum warpage: 0.05 mm (0.0020 in.)

If warpage is greater than maximum, replace the cylinder block.

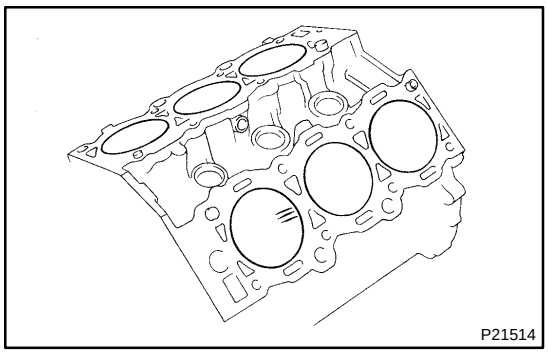

(b) Visually check the cylinder for vertical scratches.

If deep scratches are present, rebore all the 6 cylinders and replace all the 6 pistons. If necessary, replace the cylinder block.

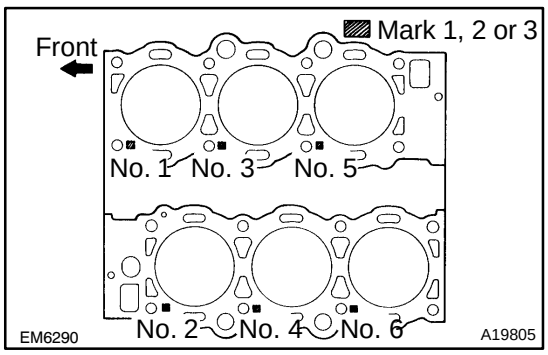

(c) Inspect the cylinder bore diameter.

HINT:

There are 3 sizes of the standard cylinder bore diameter, marked 1, 2 and 3 accordingly. The mark is stamped on the top of the cylinder block.

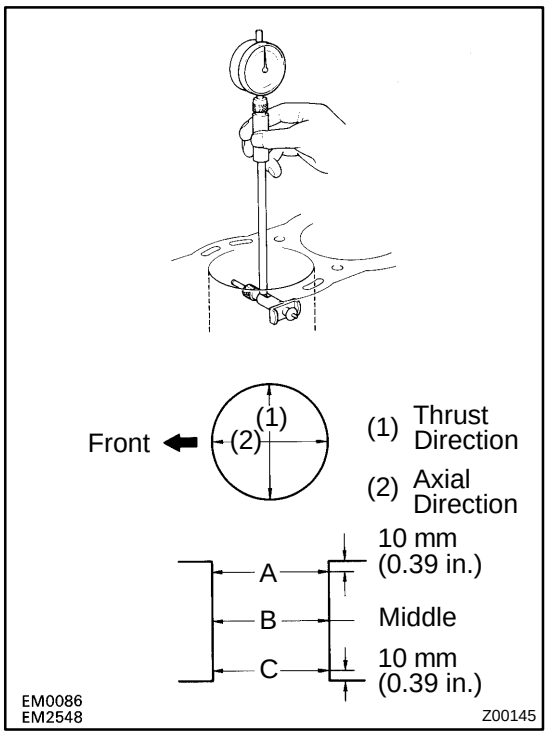

Using a cylinder gauge, measure the cylinder bore diameter at positions A, B and C in the thrust and axial directions.

Standard diameter:

Mark 1	93.500 – 93.510 mm (3.6811 – 3.6815 in.)
Mark 2	93.510 – 93.520 mm (3.6815 – 3.6819 in.)
Mark 3	93.520 – 93.530 mm (3.6819 – 3.6823 in.)

Maximum diameter:

STD	93.730 mm (3.6902 in.)
O/S 0.50	94.230 mm (3.7098 in.)

If the diameter is greater than maximum, rebore all the 6 cylinders and replace all the 6 pistons. If necessary, replace the cylinder block.

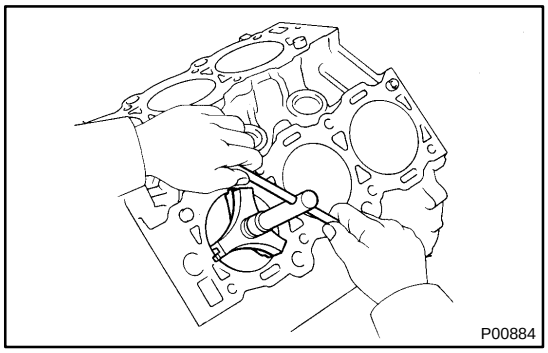

3. REMOVE CYLINDER RIDGE

If the wear is less than 0.2 mm (0.008 in.), using a ridge reamer, grind the top of the cylinder.

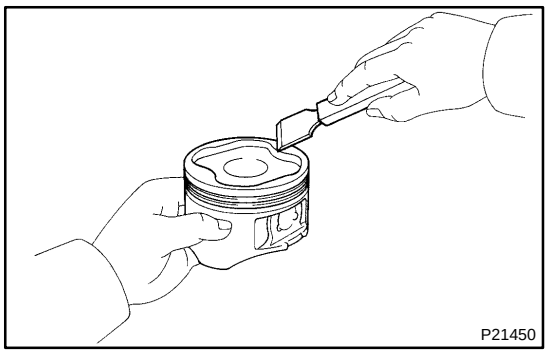

4. CLEAN PISTON

(a) Using a gasket scraper, remove the carbon from the piston top.

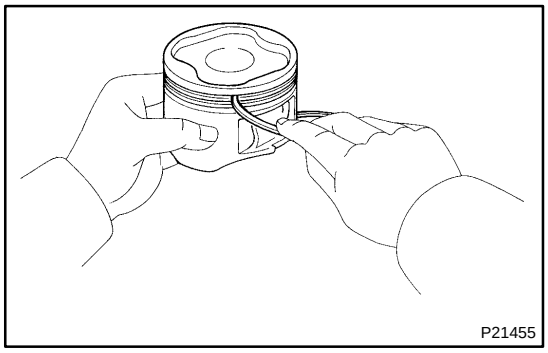

(b) Using a groove cleaning tool or broken ring, clean the piston ring grooves.

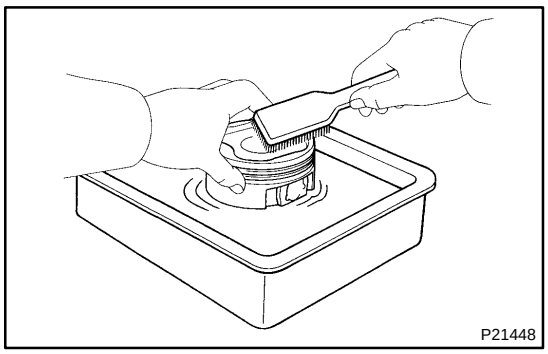

(c) Using solvent and a brush, thoroughly clean the piston.

NOTICE:

Do not use a wire brush.

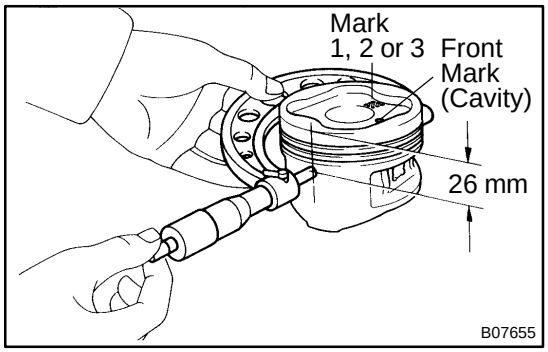

5. INSPECT PISTON AND CONNECTING ROD

(a) Inspect the piston oil clearance.

HINT:

There are 3 sizes of the standard piston diameter, marked 1, 2 and 3 accordingly. The mark is stamped on the piston top.

(1) Using a micrometer, measure the piston diameter at right angles to the piston pin center line, 26 mm (1.02 in.) from the piston head.

Piston diameter:

STD	Mark 1	93.356 – 93.366 mm (3.6754 – 3.6758 in.)
	Mark 2	93.367 – 93.376 mm (3.6759 – 3.6762 in.)
	Mark 3	93.377 – 93.386 mm (3.6763 – 3.6766 in.)
O/S 0.50		93.856 – 93.886 mm (3.6951 – 3.6963 in.)

(2) Measure the cylinder bore diameter in the thrust directions (See step 2).

(3) Subtract the piston diameter measurement from the cylinder bore diameter measurement.

Standard oil clearance:

0.134 – 0.154 mm (0.0053 – 0.0060 in.)

Maximum oil clearance: 0.174 mm (0.0069 in.)

If the oil clearance is greater than maximum, replace all the 6 pistons. If necessary, rebore all the 6 cylinders or replace the cylinder block.

HINT:

Use new cylinder block:

Use a piston with the same number mark as the standard bore diameter marked on the cylinder block.

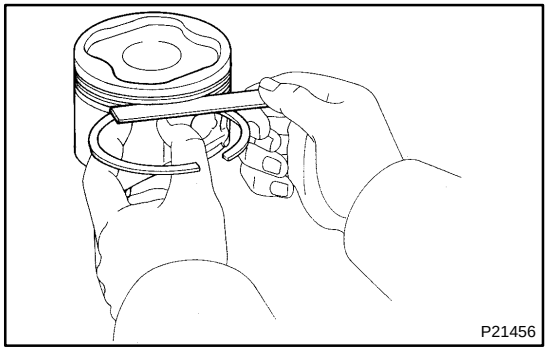

(b) Inspect the piston ring groove clearance.

Using a feeler gauge, measure the clearance between new piston ring and the wall of the piston ring groove.

Standard ring groove clearance:

No. 1	0.040 – 0.080 mm (0.0016 – 0.0031 in.)
No. 2	0.030 – 0.070 mm (0.0012 – 0.0028 in.)

If the clearance not as specified, replace the piston.

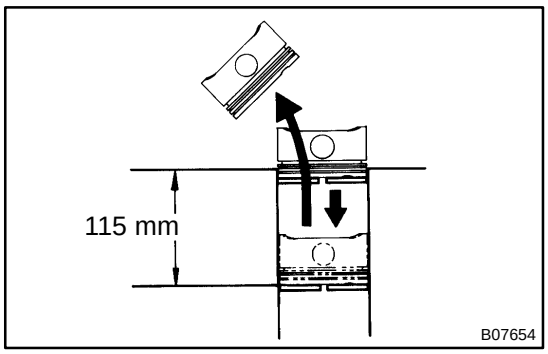

(c) Inspect piston ring end gap.
(1) Insert the piston ring into the cylinder bore.
(2) Using a piston, push the piston ring a little to the bottom of the ring travel, 115 mm (4.53 in.) from the top of the cylinder block.

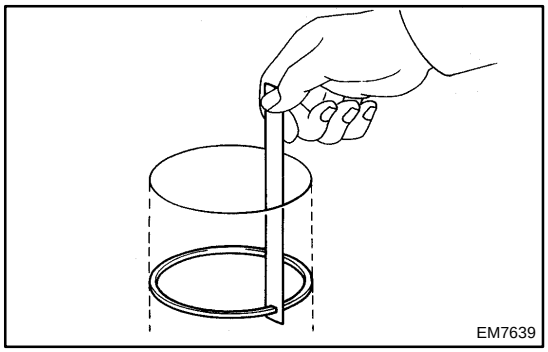

(3) Using a feeler gauge, measure the ring end gap.

Standard ring end gap:

No. 1	0.300 – 0.500 mm (0.0118 – 0.0197 in.)
No. 2	0.400 – 0.600 mm (0.0157 – 0.0236 in.)
Oil (Side rail)	0.150 – 0.550 mm (0.0059 – 0.0217 in.)

Maximum ring end gap:

No. 1	1.100 mm (0.0433 in.)
No. 2	1.200 mm (0.0472 in.)
Oil (Side rail)	1.150 mm (0.0453 in.)

If the end gap is greater than maximum, replace the piston ring.
If the end gap is greater than maximum, even with a new piston ring, rebore all the 6 cylinders or replace the cylinder block.

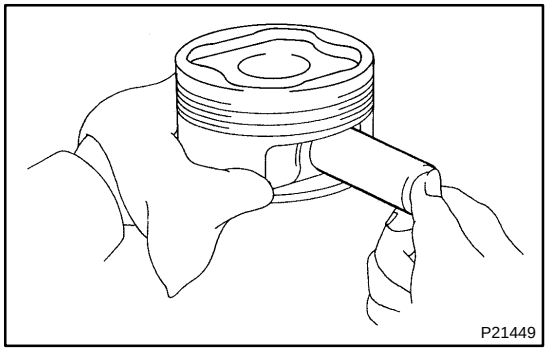

(d) Inspect the piston pin fit.
At 60˚C (140˚F), you should be able to push the piston pin into the piston pin hole with your thumb.

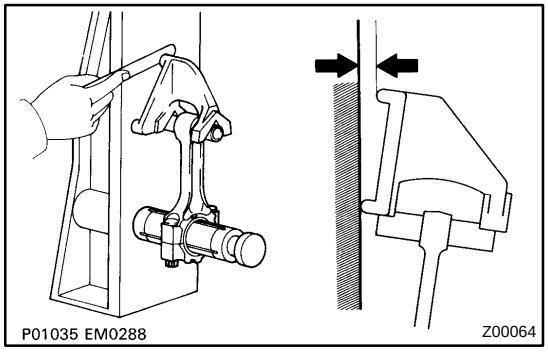

(e) Using a rod aligner and feeler gauge, check the connecting rod alignment.
(1) Check for bend.

Maximum bend:

0.05 mm (0.0020 in.) per 100 mm (3.94 in.)

If bend is greater than maximum, replace the connecting rod assembly.

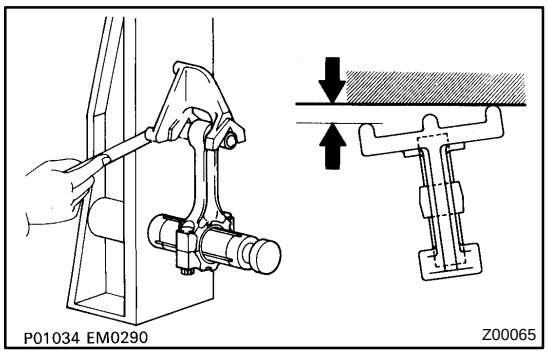

(2) Check for twist.

Maximum twist:

0.15 mm (0.0059 in.) per 100 mm (3.94 in.)

If twist is greater than maximum, replace the connecting rod assembly.

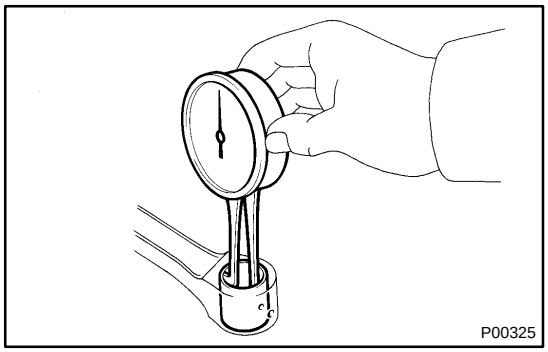

(f) Inspect the piston clearance.

(1) Using a caliper gauge, measure the inside diameter of the connecting rod bushing.

Bushing inside diameter:

22.005 – 22.017 mm (0.8663 – 0.8668 in.)

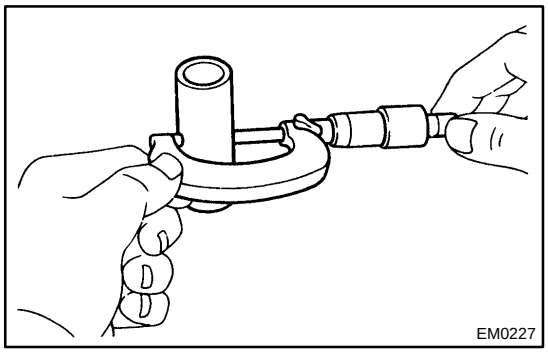

(2) Using a micrometer, measure the piston pin diameter.

Piston pin diameter:

21.997 – 22.009 mm (0.8660 – 0.8665 in.)

(3) Subtract the piston pin diameter measurement from the bushing inside diameter measurement.

Standard oil clearance:

0.005 – 0.011 mm (0.0002 – 0.0004 in.)

Maximum oil clearance: 0.05 mm (0.0020 in.)

If the oil clearance is greater than maximum, replace the bushing (See page EM–93). If necessary, replace the piston and piston pin as a set.

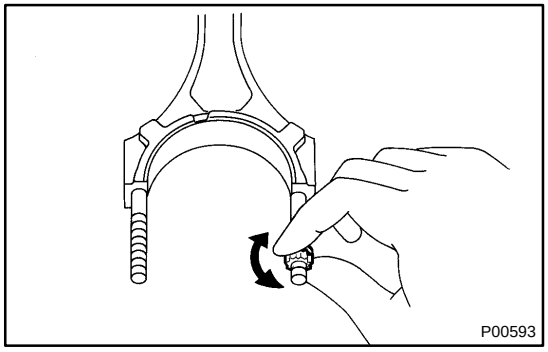

(g) Inspect the connecting rod bolt.

(1) Install the cap nut to the connecting rod bolt. Check that the rod cap nut can be turned easily by hand to the end of the thread.

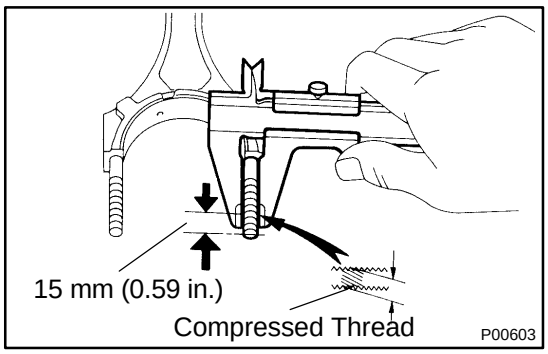

(2) If the cap nut cannot be turned easily, measure the outer diameter of the compressed thread with vernier calipers.

Standard outer diameter:
7.860 – 8.000 mm (0.3094 – 0.3150 in.)
Minimum outer diameter: 7.600 mm (0.2992 in.)

HINT:
If the location of this area cannot be judged by visual inspection, measure the outer diameter at the location shown in the illustration.

If the outer diameter is less than minimum, replace the connecting rod and rod cap nut as a set.

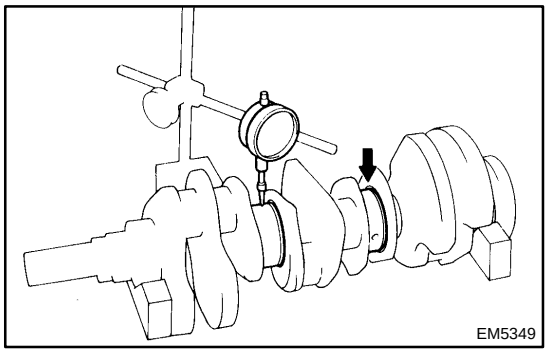

6. INSPECT CRANKSHAFT

(a) Inspect the for circle runout.

(1) Place the crankshaft on V–blocks.

(2) Using a dial indicator, measure the circle runout at the No. 2 and No. 3 journals.

Maximum circle runout: 0.06 mm (0.0024 in.)

If the circle runout is greater than maximum, replace the crankshaft.

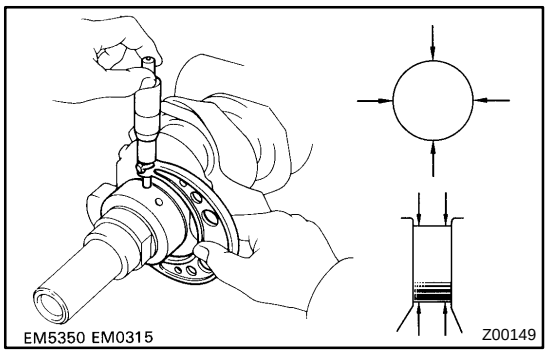

(b) Inspect the main journals and crank pins.

(1) Using a micrometer, measure the diameter of each main journal and crank pin.

Main journal diameter:

STD	63.985 – 64.000 mm (2.5191 – 2.5197 in.)
U/S 0.25	63.745 – 63.755 mm (2.5096 – 2.5100 in.)

Crank pin diameter:

STD	54.987 – 55.000 mm (2.1648 – 2.1654 in.)
U/S 0.25	54.745 – 54.755 mm (2.1553 – 2.1557 in.)

If the diameter is not as specified, check the oil clearance (See page EM–79).

(2) Check each main journal and crank pin for taper and out–of–round as shown.

Maximum taper and out–of–round:
0.02 mm (0.0008 in.)

If the taper or out–of–round is greater than maximum, grind or replace the crankshaft.

7. IF NECESSARY, GRIND AND HONE MAIN JOURNALS AND/OR CRANK PINS

(a) Grind and hone the main journals and/or crank pins to the finished undersized diameter (See procedure step 7 (b)).
(b) Install new main journal and/or crank pin to undersized bearings.

EM1V3–01

REPLACEMENT

1. REPLACE OVERSIZED (O/S) PISTON

HINT:

- ▲ Bore all the 6 cylinders for the oversized piston outside diameter.
- ▲ Replace all the piston rings with ones to match the oversized pistons.

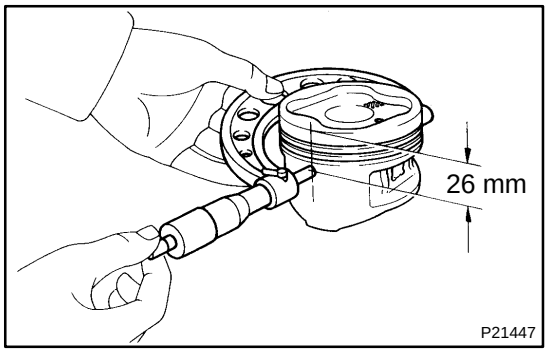

(a) Keep the oversized pistons.
Oversized piston diameter:
O/S 0.50: 93.856 – 93.886 mm (3.6951 – 3.6963 in.)

(b) Calculate amount to the bore cylinders.
(1) Using a micrometer, measure the piston diameter at right angle to the piston pin center line, 26 mm (1.02 in.) from the piston head.
(2) Calculate the amount of each cylinder to be rebored is as follows.
Size to be rebored = P + C – H
P = Piston diameter
C = Piston oil clearance
0.134 – 0.154 mm (0.0053 – 0.0060 in.)
H = Allowance for honing
0.02 mm (0.0008 in.) or less
(3) Bore and hone the cylinder to calculated dimensions.
Maximum honing: 0.02 mm (0.0008 in.)

NOTICE:
Excess honing will destroy the finished roundness.

2. REPLACE CRANKSHAFT FRONT OIL SEAL (See page EM–93)

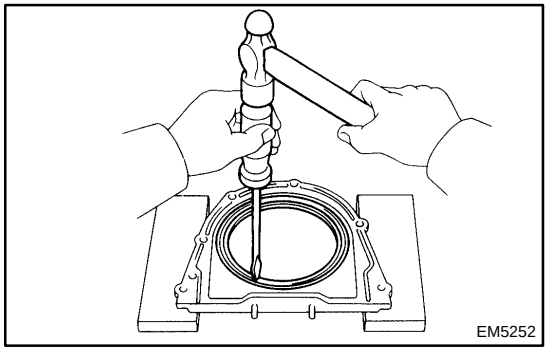

3. REPLACE CRANKSHAFT REAR OIL SEAL

HINT:
There are 2 methods ((a) and (b)) to replace the oil seal.

(a) If the rear oil seal retainer is removed from the cylinder block:
(1) Using a screwdriver and hammer, tap out the oil seal.

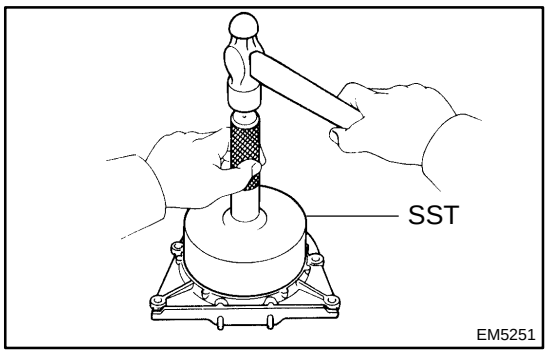

(2) Using SST and a hammer, tap in a new oil seal until its surface is flush with the rear oil seal retainer edge.
SST 09223–15030, 09950–70010 (09951–07150)
(3) Apply MP grease to the oil seal lip.

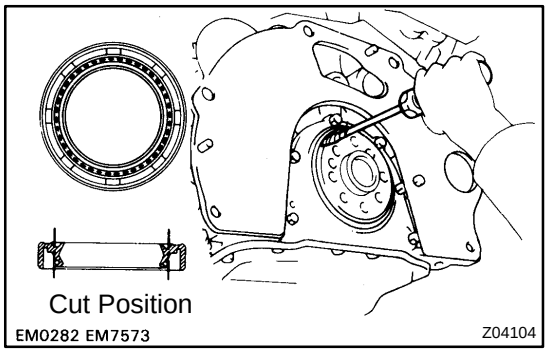

(b) If the rear oil seal retainer is installed to the cylinder block:
(1) Using a knife, cut off the oil seal lip.
(2) Using a screwdriver, pry out the oil seal.

NOTICE:

Be careful not to damage the crankshaft. Tape the screwdriver tip.

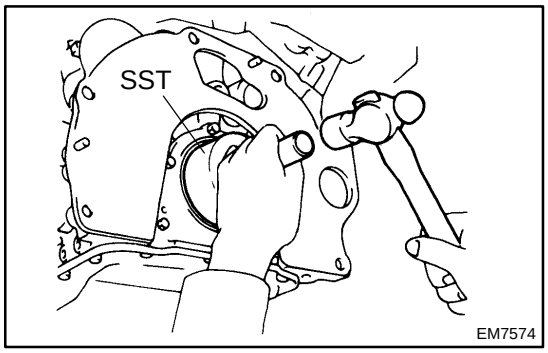

(3) Apply MP grease to a new oil seal lip.
(4) Using SST and a hammer, tap in the oil seal until its surface is flush with the rear oil seal retainer edge.
SST 09223–15030, 09950–70010 (09951–07150)

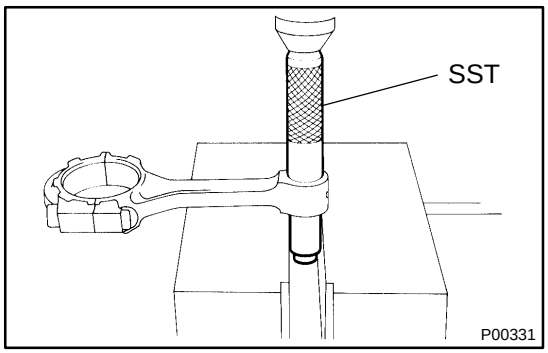

4. REPLACE CONNECTING ROD BUSHING

(a) Using SST and a press, press out the bushing.
SST 09222–30010

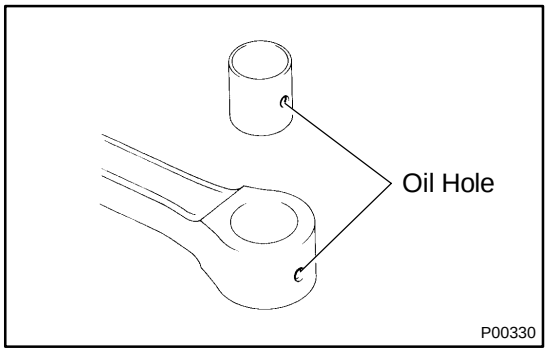

(b) Align the oil holes of a new bushing and the connecting rod.
(c) Using SST and a press, press in the bushing.
SST 09222–30010

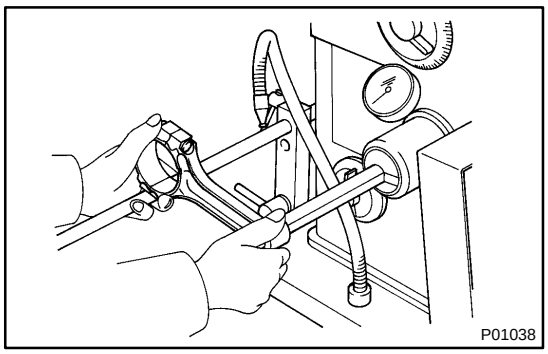

(d) Using a pin hole grinder, hone the bushing to obtain the standard specified clearance (see page EM–86) between the bushing and piston pin.

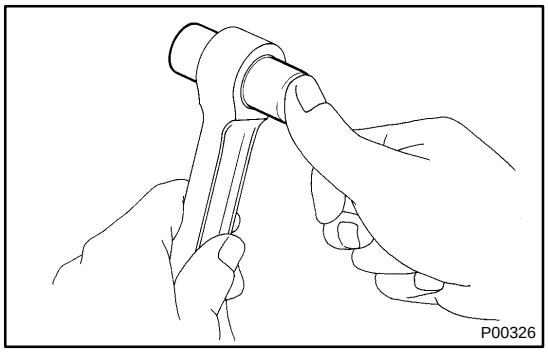

(e) Check the piston pin fit at normal room temperature. Coat the piston pin with engine oil, and push it into the connecting rod with your thumb.

EM12P–01

REASSEMBLY

HINT:

- ▲ Thoroughly clean all parts to be assembled.
- ▲ Before installing the parts, apply fresh engine oil to all sliding and rotating surfaces.
- ▲ Replace all gaskets, O–rings and oil seals with new parts.

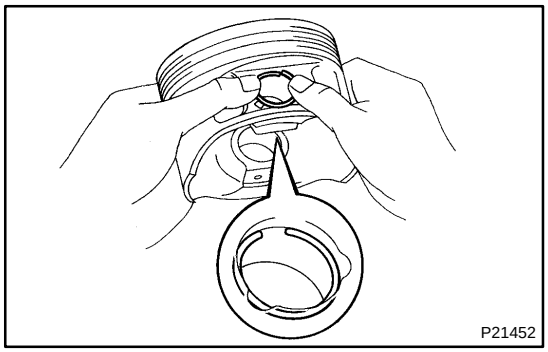

1. ASSEMBLE PISTON AND CONNECTING ROD

(a) Using a small screwdriver, install a new snap ring at one end of the piston pin hole.

NOTICE:

Be sure that end gap of the snap ring is not aligned with the pin hole cutout portion of the piston.

(b) Gradually heat the piston to about 60°C (140°F).

(c) Coat the piston pin with engine oil.

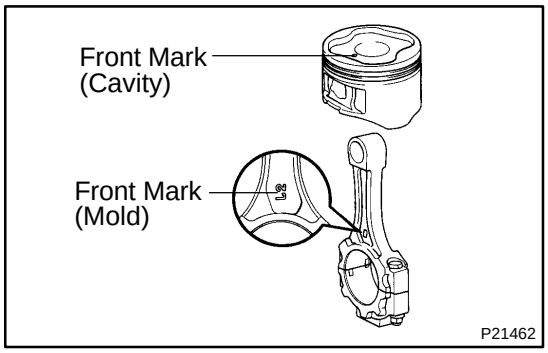

(d) Align the front marks of the piston and connecting rod, and push in the piston pin with your thumb.

(e) Using a small screwdriver, install a new snap ring on the other end of the piston pin hole.

NOTICE:

Be sure that end gap of the snap ring is not aligned with the pin hole cutout portion of the piston.

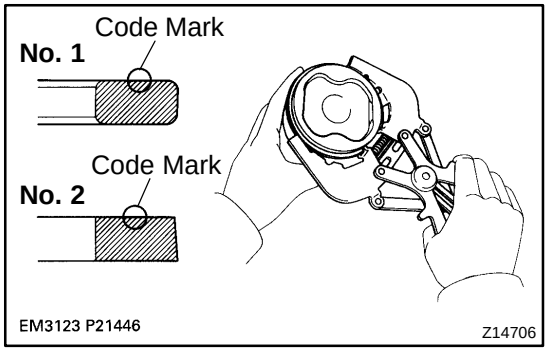

2. INSTALL PISTON RINGS

(a) Install the oil ring expander and 2 side rails by hand.

(b) Using a piston ring expander, install the 2 compression rings with the code mark facing upward.

Code mark:

No. 1	1R or T
No. 2	2R or T

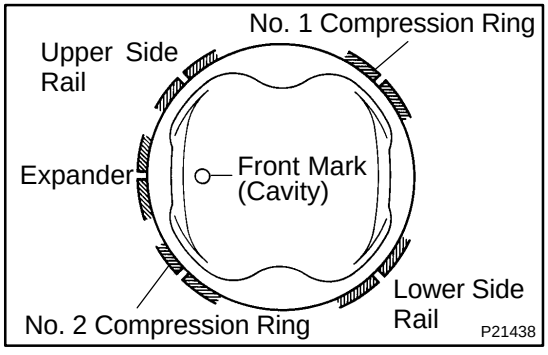

(c) Position the piston rings so that the ring ends are as shown.

NOTICE:

Do not align the ring ends.

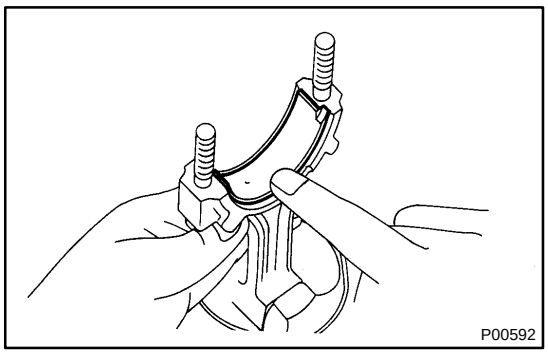

3. INSTALL BEARINGS

(a) Align the bearing claw with the groove of the connecting rod or connecting cap.

(b) Install the bearings in the connecting rod and connecting rod cap.

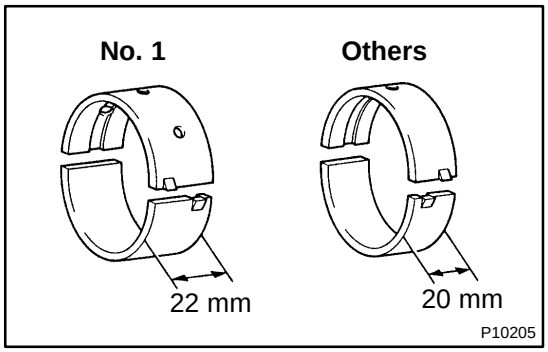

4. INSTALL MAIN BEARINGS

HINT:

▲ Main bearings come in widths of 20 mm (0.79 in.) and 22 mm (0.87 in.). Install the 22 mm (0.87 in.) bearings in the No. 1 cylinder block journal position with the main bearing caps. Install the 20 mm (0.79 in.) bearings in the other positions.

▲ Upper bearings have an oil holes lower bearings do not.

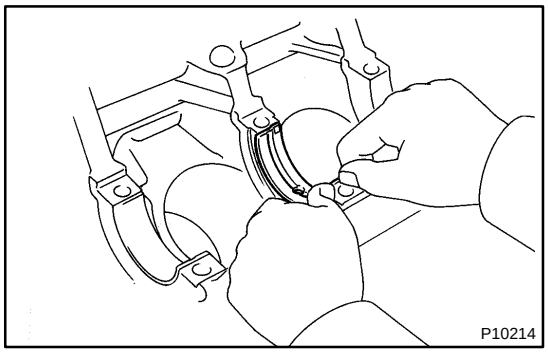

(a) Align the bearing claw with the claw groove of the main bearing cap or cylinder block.

(b) Install the bearings in the cylinder block and main bearing cap.

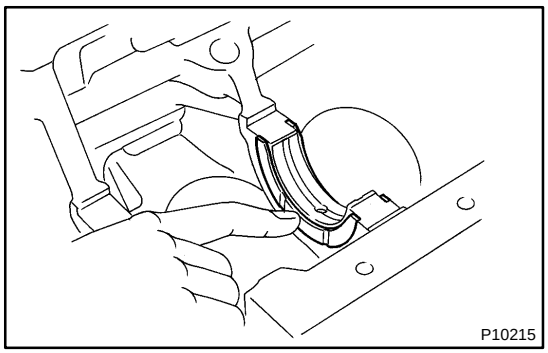

5. INSTALL UPPER THRUST WASHERS

Install the thrust washers under the No.2 journal position of the cylinder block with the oil grooves facing outward.

6. PLACE CRANKSHAFT ON CYLINDER BLOCK

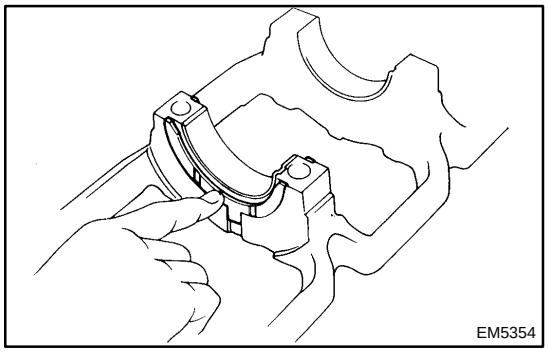

7. PLACE MAIN BEARING CAP AND LOWER THRUST WASHERS ON CYLINDER BLOCK

(a) Install the thrust washers on the No.2 journal position of the bearing cap with the grooves facing outward.

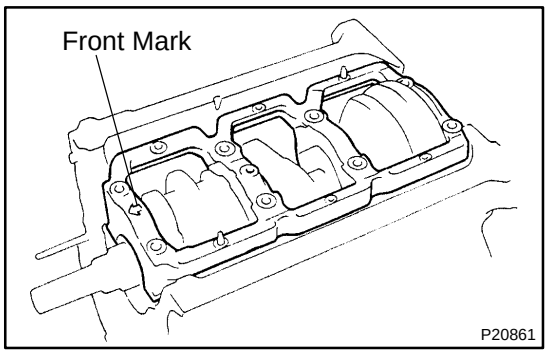

(b) Install the main bearing cap with the front mark facing forward.

8. INSTALL MAIN BEARING CAP BOLTS

HINT:

- ▲ The main bearing cap bolts are tightened in 2 progressive steps (steps (b) and (d)).
- ▲ If any main bearing cap bolt is broken or deformed, replace it.

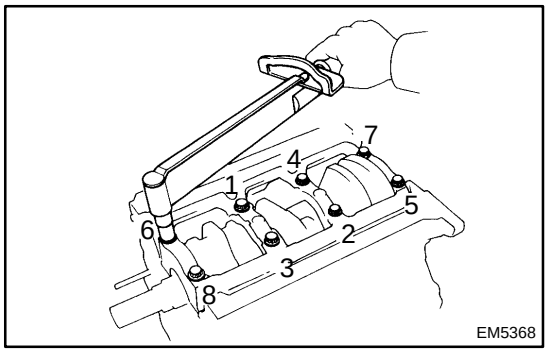

(a) Apply a light coat of engine oil on the threads and under the heads of the main bearing cap bolts.

(b) Install and uniformly tighten the 8 main bearing cap bolts, in several passes, in the sequence shown.

Torque: 61 N·m (625 kgf·cm, 45 ft·lbf)

If any one of the main bearing cap bolts does not meet the torque specification, replace the cap bolt.

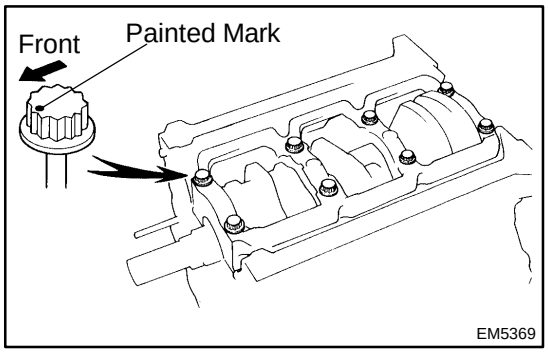

(c) Mark the front of the main bearing cap bolt with paint.

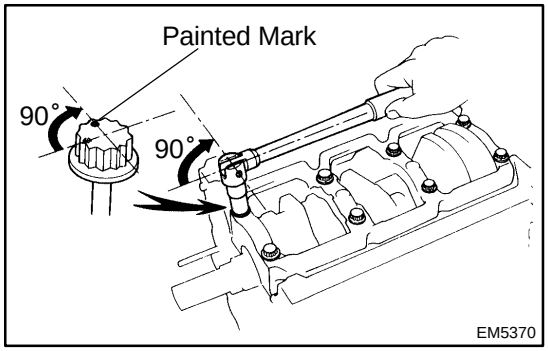

(d) Retighten the main bearing cap bolts by 90° in the numerical order shown.

(e) Check that the painted mark is now at a 90° angle to the front.

(f) Check that the crankshaft turns smoothly.

(g) Check the crankshaft thrust clearance (See page EM–86).

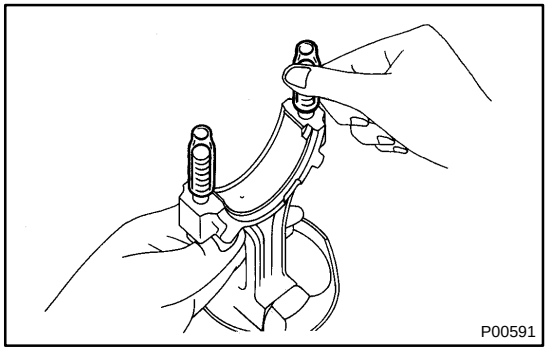

9. INSTALL PISTON AND CONNECTING ROD ASSEMBLIES

(a) Cover the connecting rod bolts with a short piece of hose to protect the crankshaft from damage.

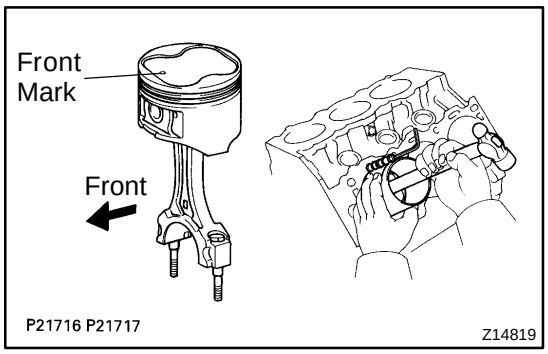

(b) Using a piston ring compressor, push correctly the numbered piston and connecting rod assemblies into each cylinder with the front mark of the piston facing forward.

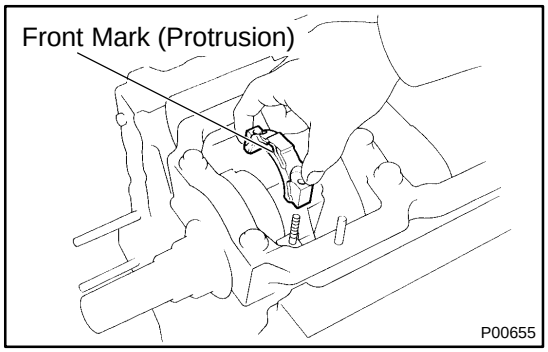

10. PLACE CONNECTING ROD CAP ON CONNECTING ROD

(a) Match the numbered connecting rod cap with the connecting rod.

(b) Install the connecting rod cap with the front mark facing forward.

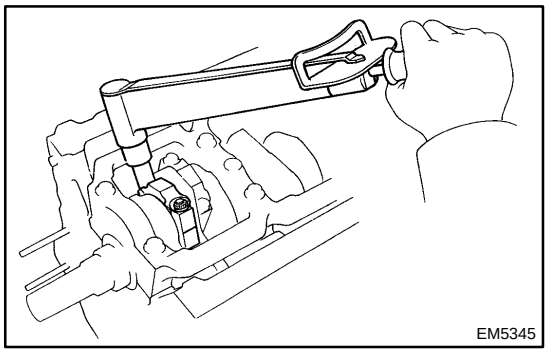

11. INSTALL CONNECTING ROD CAP NUTS

HINT:

▲ The connecting rod cap nuts are tightened in 2 progressive steps (steps (b) and (d)).

▲ If any connecting rod bolt is broken or deformed, replace it.

(a) Apply a light of engine oil on the threads and under the nuts of the connecting rod cap.

(b) Install and alternately tighten the nuts of the connecting rod cap in several passes.

Torque: 25 N·m (250 kgf·cm, 18 ft·lbf)

If any one of the connecting rod cap nuts does not meet the torque specification, replace the cap nut.

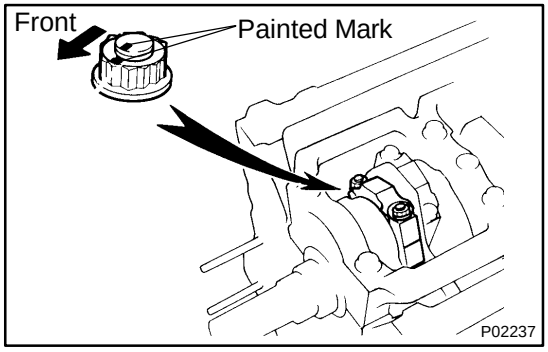

(c) Mark the front of the connecting rod cap nut and bolt with paint.

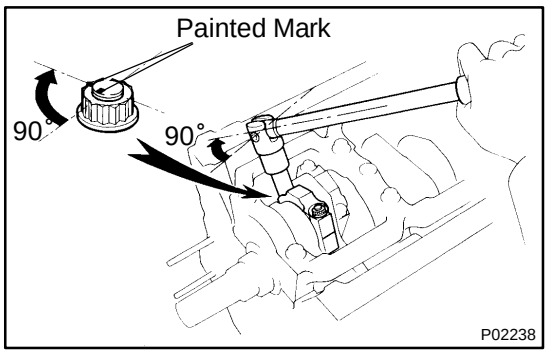

(d) Retighten the connecting rod cap nuts by 90° as shown.
(e) Check that the painted mark is now at a 90° angle to the front.
(f) Check that the crankshaft turns smoothly.
(g) Check the connecting rod thrust clearance (See page EM–86).

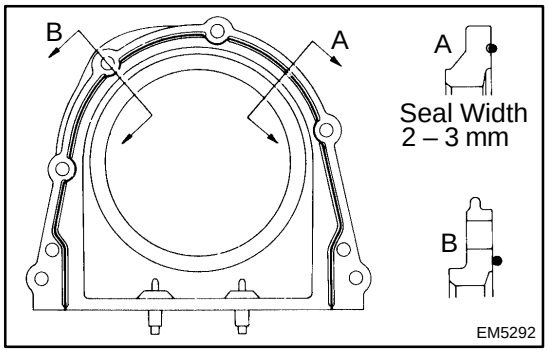

12. INSTALL REAR OIL SEAL RETAINER

(a) Remove any old packing (FIPG) materials and be careful not to drop any oil on the contacting surfaces of the retainer and cylinder block.
- ▲ Using a razor blade and gasket scraper, remove all the old packing (FIPG) material from the gasket surfaces and sealing groove.
- ▲ Thoroughly clean all components to remove all the loose material.
- ▲ Using a non–residue solvent, clean both sealing surfaces.

(b) Apply seal packing to the oil seal retainer as shown in the illustration.

Seal packing: Part No. 08826–00080 or equivalent
- ▲ Install a nozzle that has been cut to a 2 – 3 mm (0.08 – 0.12 in.) opening.
- ▲ Parts must be assembled within 5 minutes of application. Otherwise the material must be removed and reapplied.
- ▲ Immediately remove nozzle from the tube and reinstall cap.

(c) Install the oil seal retainer with the 6 bolts.
Torque: 8 N·m (80 kgf·cm, 71 in.·lbf)

13. INSTALL OIL PUMP (See page LU–15)

14. w/ Oil Cooler:
INSTALL OIL COOLER WITH WATER BYPASS HOSE AND OIL COOLER UNION (See page LU–21)

15. w/o Oil Cooler:
INSTALL OIL HOLE COVER PLATE
Torque: 60 N·m (600 kgf·cm, 44 ft·lbf)

16. INSTALL COOLANT DRAIN COCK
Torque: 39 N·m (400 kgf·cm, 29 ft·lbf)

17. INSTALL RH AND LH ENGINE MOUNTING BRACKETS
Torque: 44 N·m (440 kgf·cm, 32 ft·lbf)

18. INSTALL OIL FILTER UNION
Torque: 25 N·m (250 kgf·cm, 18 ft·lbf)

19. INSTALL OIL FILTER (See page LU–3)

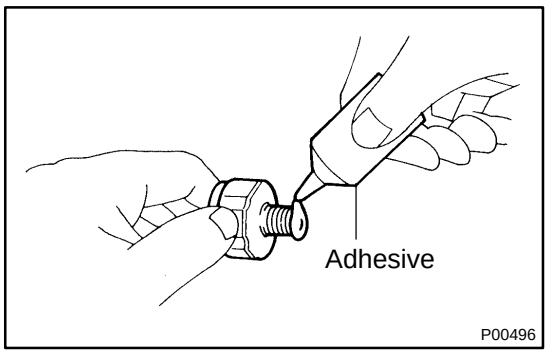

20. INSTALL OIL PRESSURE SWITCH

(a) Apply adhesive to 2 or 3 threads of the oil pressure switch.
Adhesive:
Part No. 08833–00080, THREE BOND 1344, LOCTITE 242 or equivalent

(b) Using SST, install the oil pressure switch.
SST 09816–30010
Torque: 15 N·m (150 kgf·cm, 11 ft·lbf)

21. INSTALL GENERATOR ADJUSTING BAR
Torque: 42 N·m (420 kgf·cm, 31 ft·lbf)

22. INSTALL WATER PUMP (See page CO–8)

23. INSTALL KNOCK SENSORS

Using SST, install the 2 knock sensors.
SST 09817–16011
Torque: 39 N·m (400 kgf·cm, 29 ft·lbf)

24. INSTALL NO. 2 IDLER PULLEY BRACKET
Torque: 38 N·m (380 kgf·cm, 28 ft·lbf)

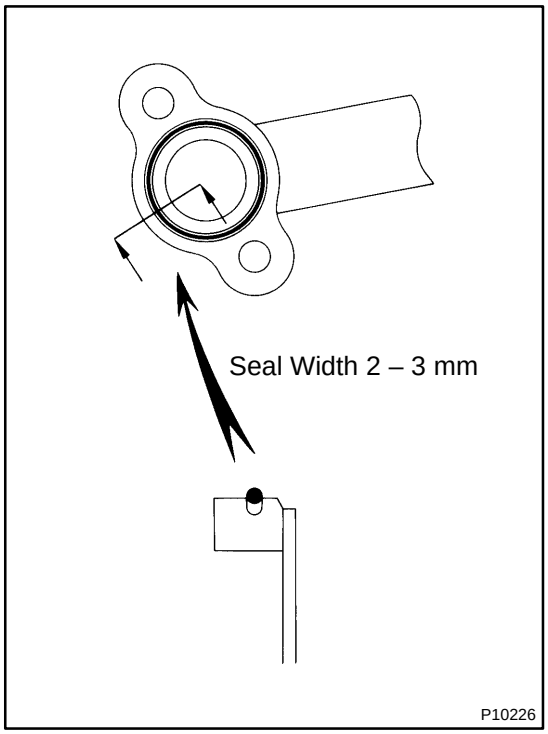

25. INSTALL WATER BYPASS PIPE WITH KNOCK SENSOR WIRE

(a) Remove any old packing (FIPG) materials and be careful not to drop any oil on the contact surfaces of the bypass and cylinder block.
- ▲ Using a razor blade and gasket scraper, remove all the old packing (FIPG) material from the gasket surfaces and sealing groove.
- ▲ Thoroughly clean all components to remove all the loose material.
- ▲ Using a non–residue solvent, clean both sealing surfaces.

(b) Apply seal packing to the groove of the bypass pipe.
Seal packing: Part No. 08826–00100 or equivalent
- ▲ Install a nozzle that has been cut to a 2 – 3 mm (0.08 – 0.12 in.) opening.

HINT:
Avoid applying an excessive amount to the surface.
- ▲ Parts must be assembled within 5 minutes of application. Otherwise the material must be removed and reapplied.
- ▲ Immediately remove nozzle from the tube and reinstall cap.

(c) Install the bypass pipe with the 2 bolts and nut.
Torque: 8.5 N·m (85 kgf·cm, 75 in.·lbf)

(d) Connect the 2 knock sensor connectors.

26. INSTALL CYLINDER HEADS

27. INSTALL PULLEYS AND TIMING BELT (See page EM–20)

28. REMOVE ENGINE STAND

29. INSTALL REAR END PLATE
Torque: 7.5 N·m (75 kgf·cm, 66 in.·lbf)

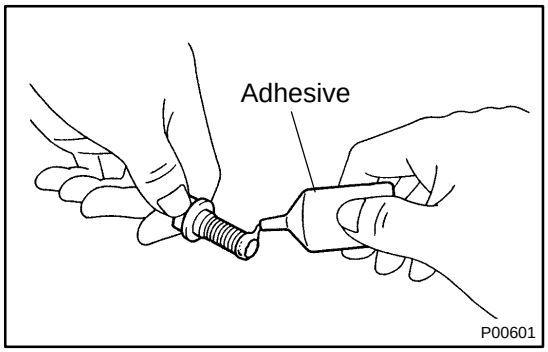

30. A/T:
INSTALL DRIVE PLATE

(a) Apply adhesive to 2 or 3 threads of the mounting bolt end.
Adhesive:
Part No. 08833–00070, THREE BOND 1324 or equivalent

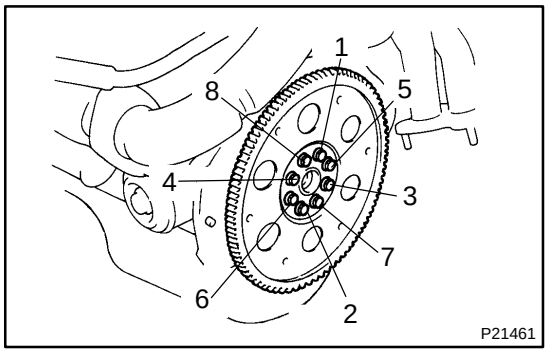

(b) Install the drive plate on the crankshaft.
(c) Install and uniformly tighten the 8 mounting bolts in several passes, in the sequence shown.
Torque: 83 N·m (850 kgf·cm, 61 ft·lbf)

31. M/T:
INSTALL FLYWHEEL
Torque: 85 N·m (850 kgf·cm, 63 ft·lbf)

EXHAUST SYSTEM

EM1LG–01

COMPONENTS

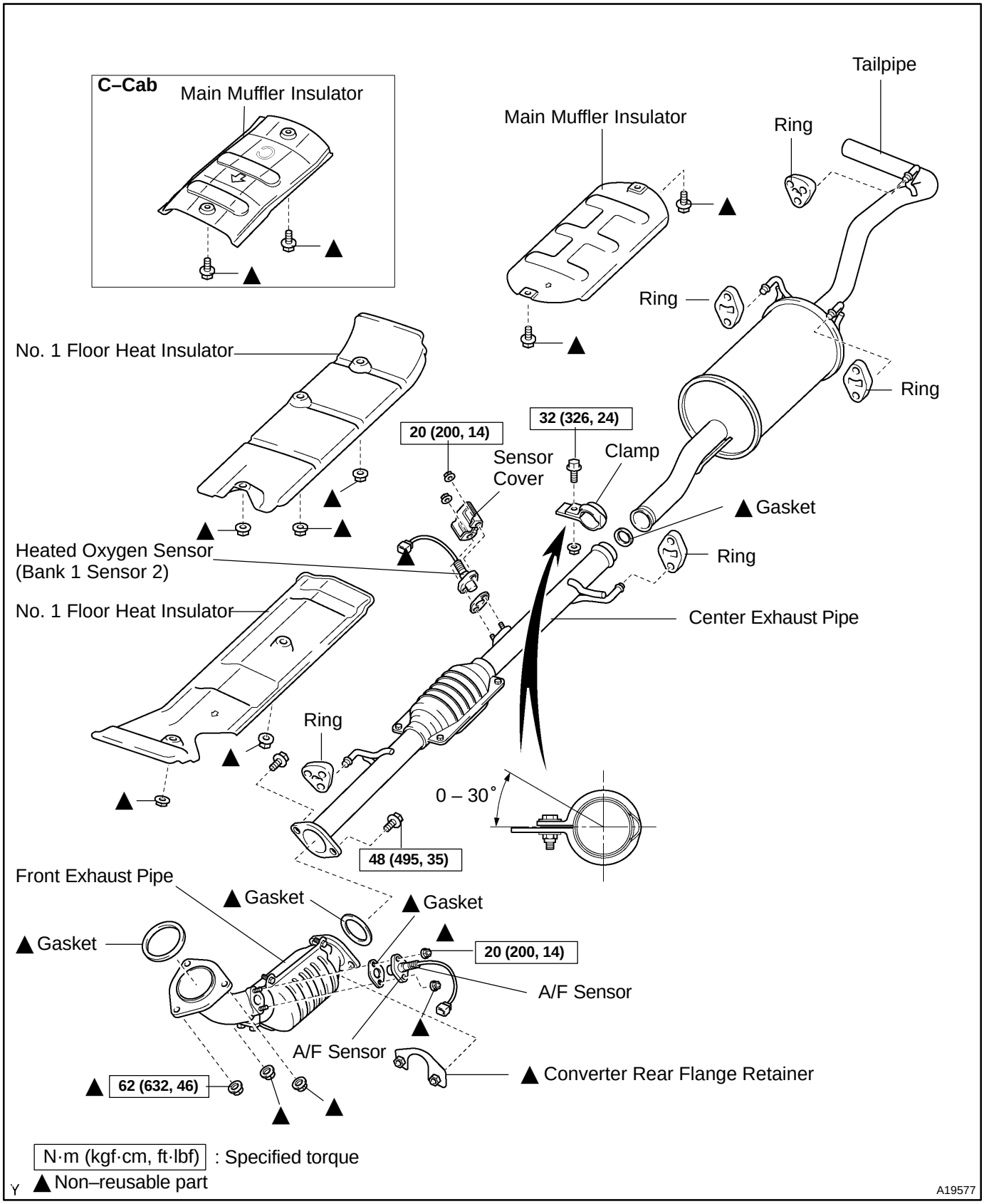

CO/HC

EM0KQ–05

INSPECTION

HINT:

This check is used only to determine whether or not the idle CO/HC complies with regulations.

1. INITIAL CONDITIONS

(a) Engine at normal operating temperature
(b) Air cleaner installed
(c) All pipes and hoses of air induction system connected
(d) All accessories switched OFF
(e) All vacuum lines properly connected
(f) SFI system wiring connectors fully plugged
(g) Ignition timing checked correctly
(h) Transmission in neutral position
(i) Tachometer and CO/HC meter calibrated by hand

2. START ENGINE

3. RACE ENGINE AT 2,500 RPM FOR APPROX. 180 SECONDS

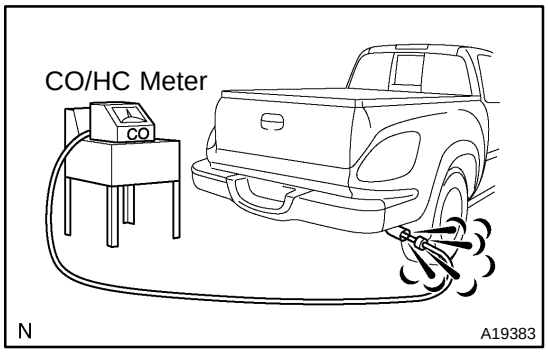

4. INSERT CO/HC METER TESTING PROBE AT LEAST 40 cm (1.3 ft) INTO TAILPIPE DURING IDLING

5. IMMEDIATELY CHECK CO/HC CONCENTRATION AT IDLE AND/OR 2,500 RPM

HINT:

When performing the 2 mode (2,500 rpm and idle) test, follow the measurement orders are prescribed by the applicable local regulations.

If the CO/HC concentration does not comply with regulations, perform troubleshooting in the order given below.

(1) Check the heated oxygen sensors operation (See page DI–246).

(2) See the table below for possible causes, and then inspect and correct the applicable causes if necessary.

CO	HC	Problems	Causes
Normal	High	Rough idle	4. Faulty ignitions: ▲Incorrect timing ▲Fouled, shorted or improperly gapped plugs 5. Incorrect valve clearance 6. Leaky intake and exhaust valves 7. Leaky cylinders
Low	High	Rough idle (fluctuating HC reading)	1. Vacuum leaks: ▲PCV hose ▲Intake manifold ▲Throttle body ▲Brake booster line 2. Lean mixture causing misfire
High	High	Rough idle (Black smoke from exhaust)	1. Restricted air filter 2. Faulty SFI system: ▲Faulty pressure regulator ▲Defective ECT sensor ▲Faulty ECM ▲Faulty injectors ▲Faulty throttle position sensor ▲Faulty MAF meter

COMPRESSION

INSPECTION

EM0KR–03

HINT:

If there is lack of power, excessive oil consumption or poor fuel economy, measure the compression pressure.

1. WARM UP AND STOP ENGINE

Allow the engine to warm up to normal operating temperature.

2. REMOVE SPARK PLUGS (See page IG–1)

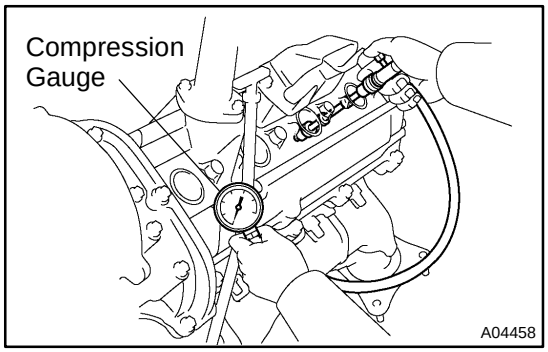

3. CHECK CYLINDER COMPRESSION PRESSURE

(a) Insert a compression gauge into the spark plug hole.

(b) Fully open the throttle.

(c) While cranking the engine, measure the compression pressure.

HINT:

Always use a fully charged battery to obtain engine speed of 250 rpm or more.

(d) Repeat steps (a) through (c) for each cylinder.

NOTICE:

This measurement must be done in as short a time as possible.

Compression pressure:
1,324 kPa (13.5 kgf/cm^2, 192 psi) or more
Minimum pressure: 981 kPa (10.0 kgf/cm^2, 142 psi)
Difference between each cylinder:
98 kPa (1.0 kgf/cm^2, 14 psi) or less

(e) If the cylinder compression in one or more cylinders is low, pour small amount of engine oil into the cylinder through the spark plug hole and repeat steps (a) through (c) for cylinders with low compression.

- If adding oil helps the compression, chances are that the piston rings and/or cylinder bore are worn or damaged.
- If pressure stays low, a valve may be sticking or seating is improper, or there may be leakage past the gasket.

4. REINSTALL SPARK PLUGS (See page IG–1)

VALVE CLEARANCE

INSPECTION

EM1UT–01

HINT:

Inspect and adjust the valve clearance when the engine is cold.

1. **REMOVE NO. 3 TIMING BELT COVERS (See page EM–14)**
2. **REMOVE CYLINDER HEAD COVERS (See page EM–34)**

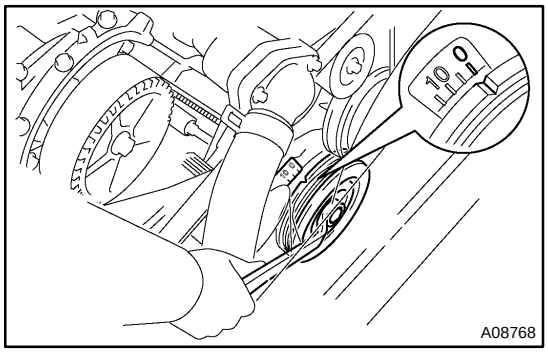

3. **SET NO. 1 CYLINDER TO TDC/COMPRESSION**

(a) Turn the crankshaft pulley, and align its groove with timing mark ”0” of the No. 1 timing belt cover.

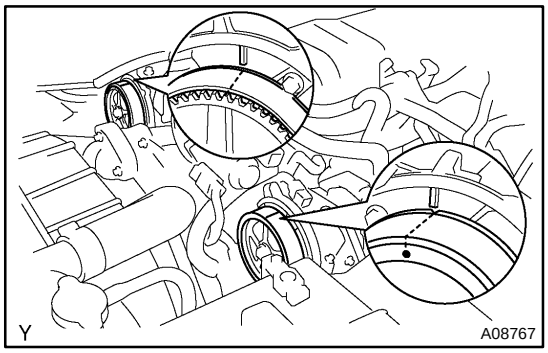

(b) Check that the timing marks of the camshaft timing pulleys and timing belt rear plates are aligned.

If not, turn the crankshaft 1 revolution (360˚) and align the mark as above.

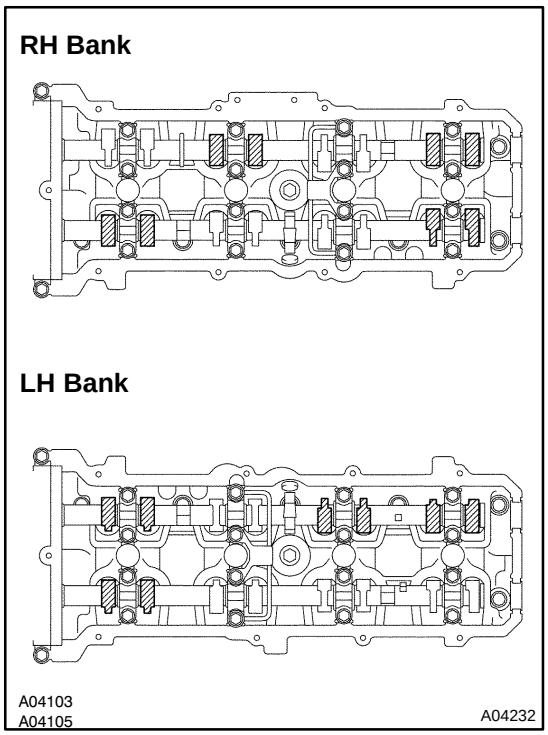

4. **INSPECT VALVE CLEARANCE**

(a) Check only the valves indicated.

▲ Using a feeler gauge, measure the clearance between the valve lifter and camshaft.

▲ Record the out–of–specification valve clearance measurements. They will be used later to determine the required replacement adjusting shim.

Valve clearance (Cold):

Intake	0.15 – 0.25 mm (0.006 – 0.010 in.)
Exhaust	0.25 – 0.35 mm (0.010 – 0.014 in.)

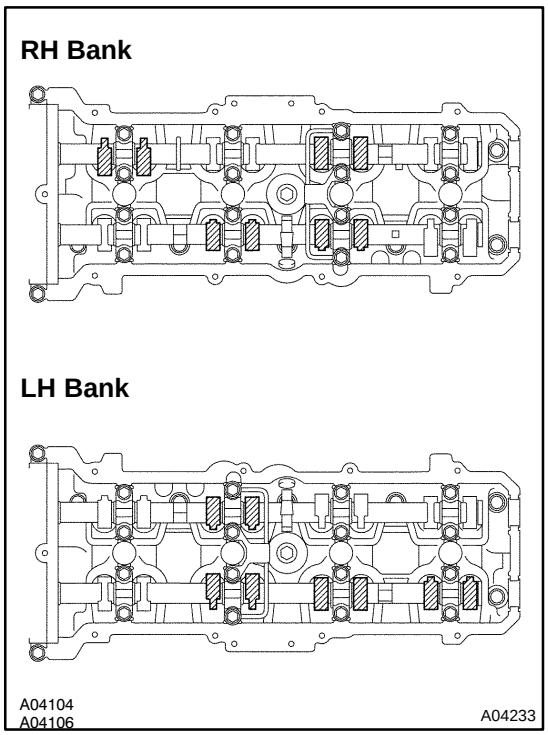

(b) Turn the crankshaft 1 revolution (360°) and align the mark as above. (See procedure in step 8)

(c) Check only the valves indicated as shown. Measure the valve clearance. (See procedure in step (a))

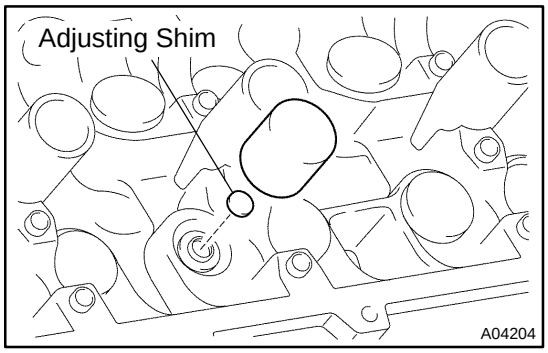

5. ADJUST VALVE CLEARANCE

(a) Disconnect the timing belt from the camshafts (See page EM–14).

(b) Remove the camshafts (See page EM–34).

(c) Remove the valve lifter and adjusting shim.

NOTICE:

Be careful not to drop the adjusting shim into the lifter hole when removing the valve lifter.

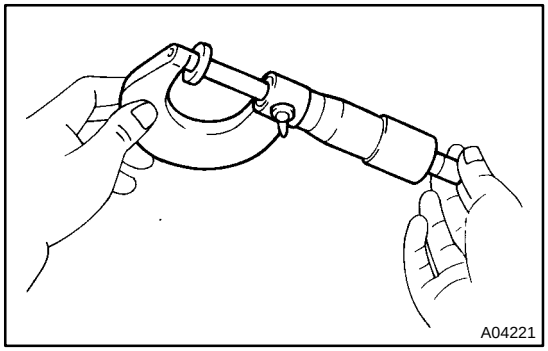

(d) Determine the replacement adjusting shim size according to these Formula or Charts:

(1) Using a micrometer, measure the thickness of the removed shim.

(2) Calculate the thickness of a new shim so that the valve clearance comes within the specified value.

T ..... Thickness of removed shim

A ..... Measured valve clearance

N ..... Thickness of new shim

Intake	N = T + (A – 0.20 mm (0.008 in.))
Exhaust	N = T + (A – 0.30 mm (0.012 in.))

(3) Select a new shim with thickness as close as possible to the calculated value.

HINT:

Shims are available in 41 increments of 0.020 mm (0.0008 in.), from 2.00 mm (0.0787 in.) to 2.80 mm (0.1102 in.).

Adjusting Shim Selection Chart (Intake)

Measured clearance mm (in.) \ Installed shim thickness mm (in.)	2.000 (0.0787)	2.020 (0.0795)	2.040 (0.0803)	2.060 (0.0811)	2.080 (0.0819)	2.100 (0.0827)	2.120 (0.0835)	2.140 (0.0843)	2.160 (0.0850)	2.180 (0.0858)	2.200 (0.0866)	2.210 (0.0870)	2.220 (0.0874)	2.230 (0.0878)	2.240 (0.0882)	2.250 (0.0886)	2.260 (0.0890)	2.270 (0.0894)	2.280 (0.0898)	2.290 (0.0902)	2.300 (0.0906)	2.310 (0.0909)	2.320 (0.0913)	2.330 (0.0917)	2.340 (0.0921)	2.350 (0.0925)	2.360 (0.0929)	2.370 (0.0933)	2.380 (0.0937)	2.390 (0.0941)	2.400 (0.0945)	2.410 (0.0949)	2.420 (0.0953)	2.430 (0.0957)	2.440 (0.0961)	2.450 (0.0965)	2.460 (0.0969)	2.470 (0.0972)	2.480 (0.0976)	2.490 (0.0980)	2.500 (0.0984)	2.510 (0.0988)	2.520 (0.0992)	2.530 (0.0996)	2.540 (0.1000)	2.550 (0.1004)	2.560 (0.1008)	2.570 (0.1012)	2.580 (0.1016)	2.590 (0.1020)	2.600 (0.1024)	2.620 (0.1031)	2.640 (0.1039)	2.660 (0.1047)	2.680 (0.1055)	2.700 (0.1063)	2.720 (0.1071)	2.740 (0.1079)	2.760 (0.1087)	2.780 (0.1094)	2.800 (0.1102)
0.000–0.030 (0.0000–0.0012)							00	00	00	00	02	02	04	04	06	06	08	08	10	10	12	12	14	14	16	16	18	18	20	20	22	22	24	24	26	26	28	28	30	30	32	32	34	34	36	36	38	38	40	40	42	44	46	48	50	52	54	56	58	60	62
0.031–0.050 (0.0012–0.0020)						00	00	00	00	02	04	06	06	08	08	10	10	12	12	14	14	16	16	18	18	20	20	22	22	24	24	26	26	28	28	30	30	32	32	34	34	36	36	38	38	40	40	42	42	44	44	46	48	50	52	54	56	58	60	62	64
0.051–0.070 (0.0020–0.0028)					00	00	00	00	02	04	06	08	08	10	10	12	12	14	14	16	16	18	18	20	20	22	22	24	24	26	26	28	28	30	30	32	32	34	34	36	36	38	38	40	40	42	42	44	44	46	46	48	50	52	54	56	58	60	62	64	66
0.071–0.090 (0.0028–0.0035)				00	00	00	00	02	04	06	08	10	10	12	12	14	14	16	16	18	18	20	20	22	22	24	24	26	26	28	28	30	30	32	32	34	34	36	36	38	38	40	40	42	42	44	44	46	46	48	48	50	52	54	56	58	60	62	64	66	68
0.091–0.110 (0.0036–0.0043)			00	00	00	00	02	04	06	08	10	12	12	14	14	16	16	18	18	20	20	22	22	24	24	26	26	28	28	30	30	32	32	34	34	36	36	38	38	40	40	42	42	44	44	46	46	48	48	50	50	52	54	56	58	60	62	64	66	68	70
0.111–0.130 (0.0044–0.0051)		00	00	00	00	02	04	06	08	10	12	14	14	16	16	18	18	20	20	22	22	24	24	26	26	28	28	30	30	32	32	34	34	36	36	38	38	40	40	42	42	44	44	46	46	48	48	50	50	52	52	54	56	58	60	62	64	66	68	70	72
0.131–0.149 (0.0052–0.0059)		00	00	00	02	04	06	08	10	12	14	16	16	18	18	20	20	22	22	24	24	26	26	28	28	30	30	32	32	34	34	36	36	38	38	40	40	42	42	44	44	46	46	48	48	50	50	52	52	54	54	56	58	60	62	64	66	68	70	72	74
0.150–0.250 (0.0059–0.0098)						

Adjusting Shim Selection Chart (Exhaust)

| Measured clearance mm (in.) \ Installed shim thickness mm (in.) | 2.000 (0.0787) | 2.020 (0.0795) | 2.040 (0.0803) | 2.060 (0.0811) | 2.080 (0.0819) | 2.100 (0.0827) | 2.120 (0.0835) | 2.140 (0.0843) | 2.160 (0.0850) | 2.180 (0.0858) | 2.200 (0.0866) | 2.210 (0.0870) | 2.220 (0.0874) | 2.230 (0.0878) | 2.240 (0.0882) | 2.250 (0.0886) | 2.260 (0.0890) | 2.270 (0.0894) | 2.280 (0.0898) | 2.290 (0.0902) | 2.300 (0.0906) | 2.310 (0.0909) | 2.320 (0.0913) | 2.330 (0.0917) | 2.340 (0.0921) | 2.350 (0.0925) | 2.360 (0.0929) | 2.370 (0.0933) | 2.380 (0.0937) | 2.390 (0.0941) | 2.400 (0.0945) | 2.410 (0.0949) | 2.420 (0.0953) | 2.430 (0.0957) | 2.440 (0.0961) | 2.450 (0.0965) | 2.460 (0.0969) | 2.470 (0.0972) | 2.480 (0.0976) | 2.490 (0.0980) | 2.500 (0.0984) | 2.510 (0.0988) | 2.520 (0.0992) | 2.530 (0.0996) | 2.540 (0.1000) | 2.550 (0.1004) | 2.560 (0.1008) | 2.570 (0.1012) | 2.580 (0.1016) | 2.590 (0.1020) | 2.600 (0.1024) | 2.620 (0.1031) | 2.640 (0.1039) | 2.660 (0.1047) | 2.680 (0.1055) | 2.700 (0.1063) | 2.720 (0.1071) | 2.740 (0.1079) | 2.760 (0.1087) | 2.780 (0.1094) | 2.800 (0.1102) |
|---|---|---

(e) Reinstall a new adjusting shim to the spring retainer.
(f) Reinstall the valve lifter.
(g) Reinstall the camshafts (See page EM–56).
(h) Reconnect the timing belt to the camshafts (See page EM–21).
(i) Recheck the valve clearance.

6. REINSTALL CYLINDER HEAD COVERS (See page EM–56)

7. REINSTALL NO. 3 TIMING BELT COVERS (See page EM–21)

IGNITION TIMING

EM0KT–07

INSPECTION

1. WARM UP ENGINE

Allow the engine to warm up to normal operating temperature.

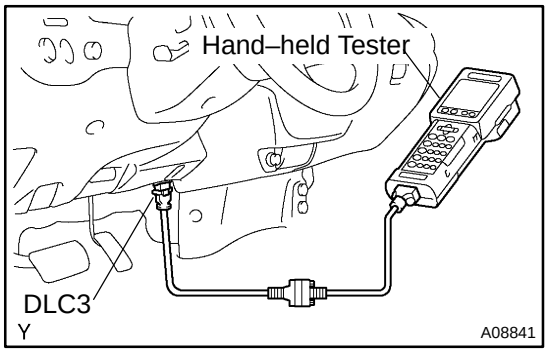

2. CONNECT HAND–HELD TESTER OR OBD II SCAN TOOL

(a) Connect the hand–held tester or OBD II scan tool to the DLC3.

(b) Please refer to the hand–held tester or OBD II scan tool operator's for further details.

3. CHECK IDLE SPEED (See page EM–10)

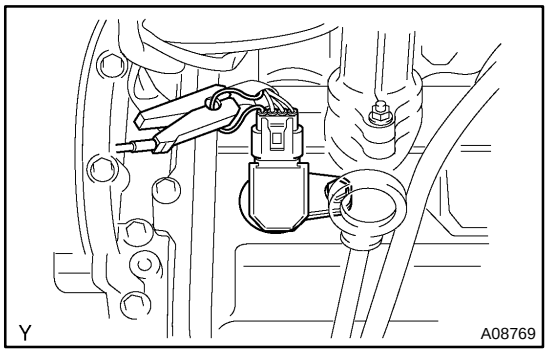

4. CONNECT TIMING LIGHT TO ENGINE

Connect the tester probe of a timing light to the wire of the ignition coil connector for No. 1 cylinder.

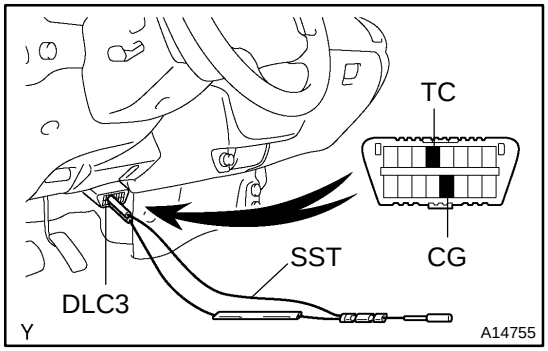

5. INSPECT IGNITION TIMING

(a) Using SST, connect terminals to TC and CG of the DLC3.
SST 09843–18040

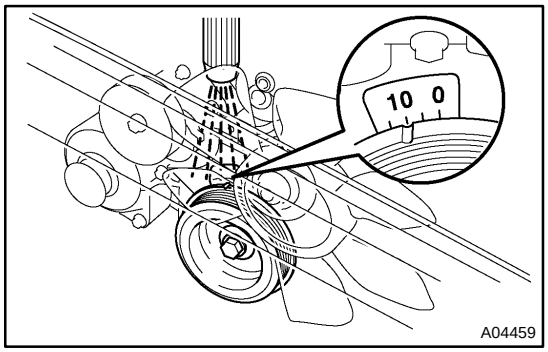

(b) Using a timing light, check the ignition timing.
Ignition timing: 8 – 12˚ BTDC @ idle (Transmission in neutral position)

(c) Remove the SST from the DLC3.
SST 09843–18020

6. DISCONNECT TIMING LIGHT FROM ENGINE

7. DISCONNECT HAND–HELD TESTER OR OBD II SCAN TOOL

IDLE SPEED

EM0KU–04

INSPECTION

1. INITIAL CONDITIONS

(a) Engine at normal operating temperature
(b) Air cleaner installed
(c) All pipes and hoses of air induction system connected
(d) All accessories switched OFF
(e) All vacuum lines properly connected
(f) SFI system wiring connectors fully plugged
(g) Ignition timing checked correctly
(h) Transmission in neutral position
(i) Air conditioning switched OFF

2. CONNECT HAND–HELD TESTER OR OBD II SCAN TOOL (See page EM–9)

3. INSPECT IDLE SPEED

(a) Race the engine speed at 2,500 rpm for approx. 90 seconds.
(b) Check the idle speed.

Idle speed: 700 ± 50 rpm

If the idle speed is not as specified, check the air intake system.

4. DISCONNECT HAND–HELD TESTER OR OBD II SCAN TOOL

TIMING BELT

COMPONENTS

EM0KV–09

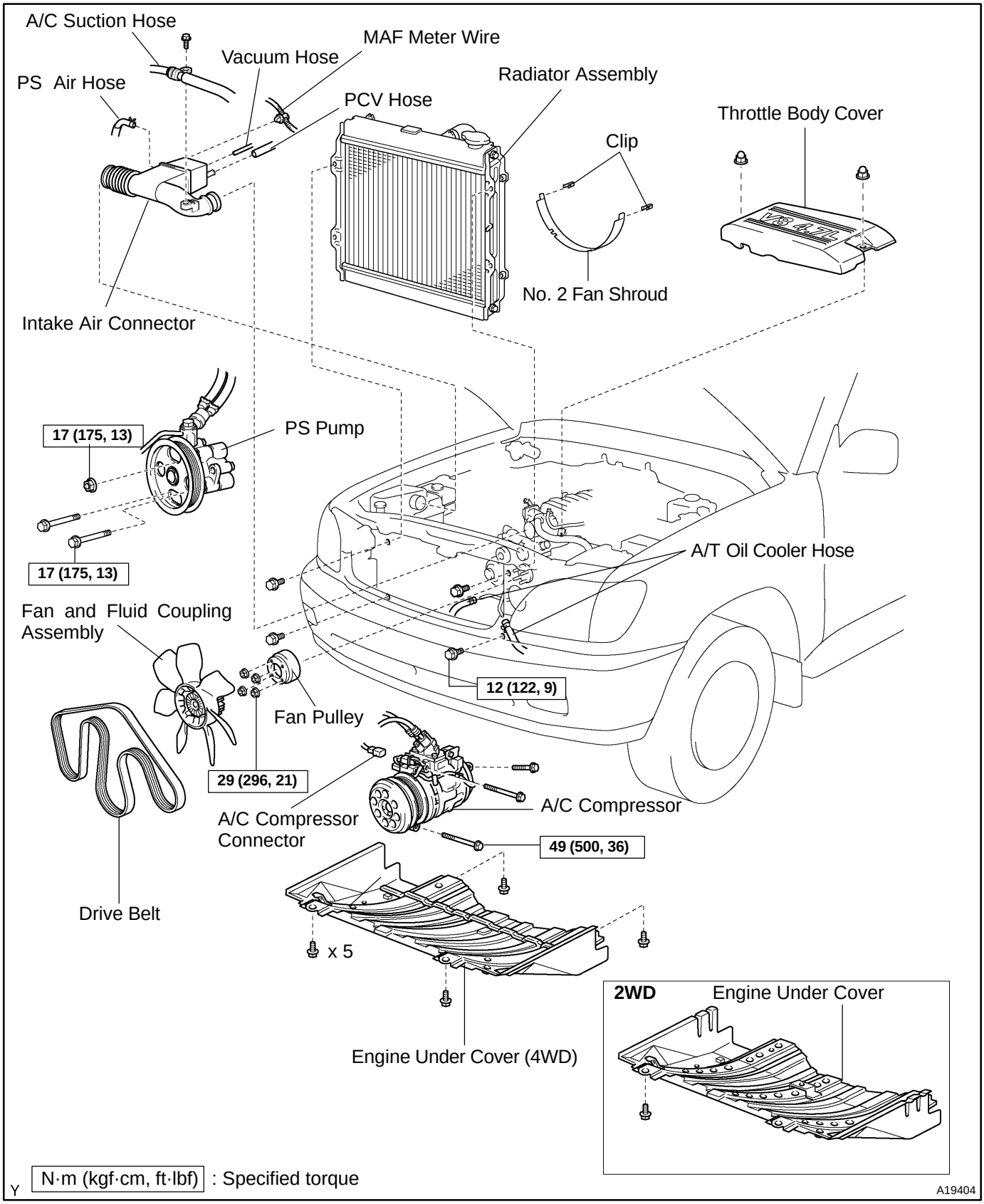

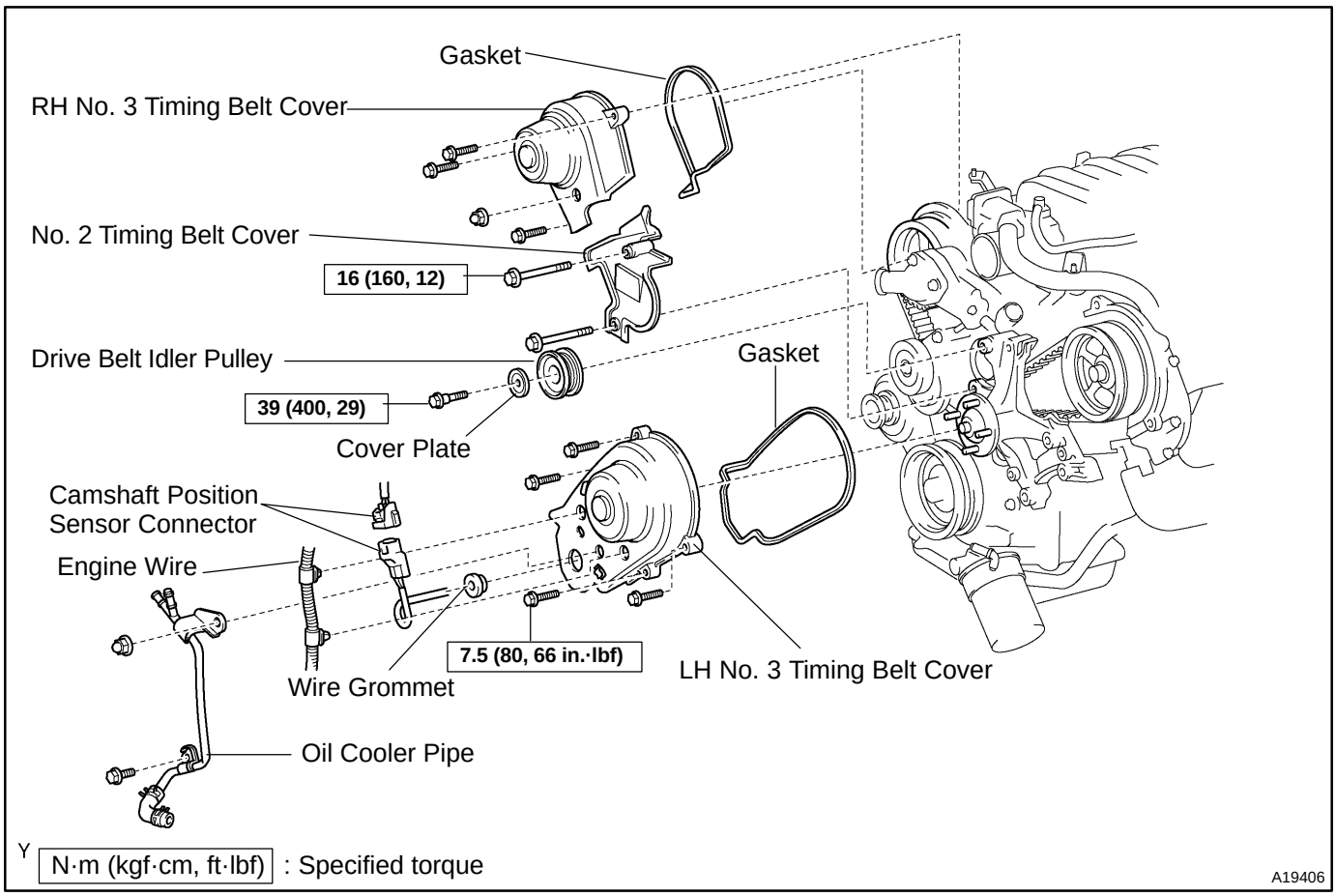
Gasket
RH No. 3 Timing Belt Cover
No. 2 Timing Belt Cover
16 (160, 12)
Drive Belt Idler Pulley
39 (400, 29)
Cover Plate
Gasket
Camshaft Position Sensor Connector
Engine Wire
7.5 (80, 66 in.·lbf)
Wire Grommet
LH No. 3 Timing Belt Cover
Oil Cooler Pipe
Y
N·m (kgf·cm, ft·lbf) : Specified torque
A19406

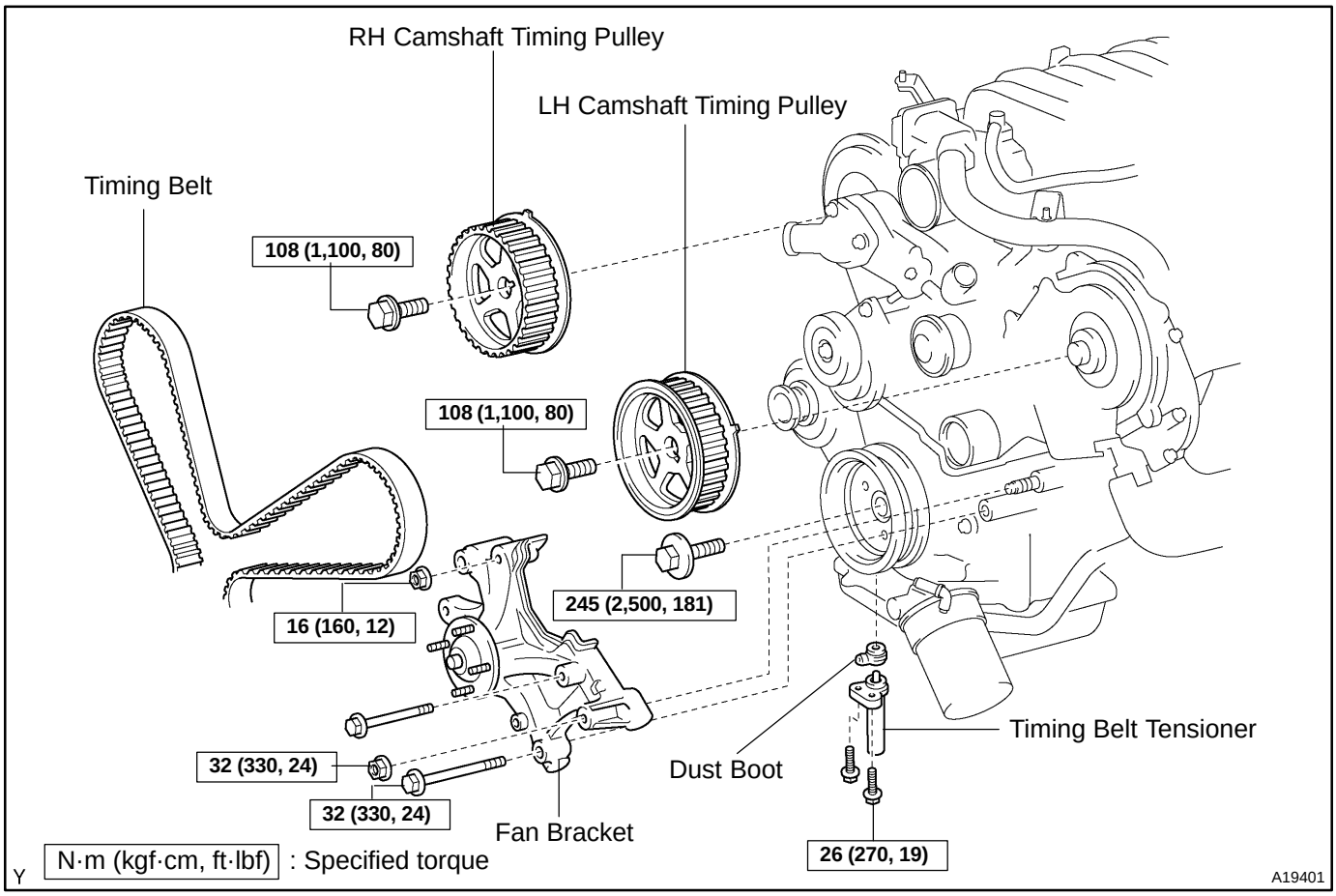
RH Camshaft Timing Pulley
LH Camshaft Timing Pulley
Timing Belt
108 (1,100, 80)
108 (1,100, 80)
245 (2,500, 181)
16 (160, 12)
Timing Belt Tensioner
Dust Boot
32 (330, 24)
32 (330, 24)
Fan Bracket
26 (270, 19)
Y
N·m (kgf·cm, ft·lbf) : Specified torque
A19401

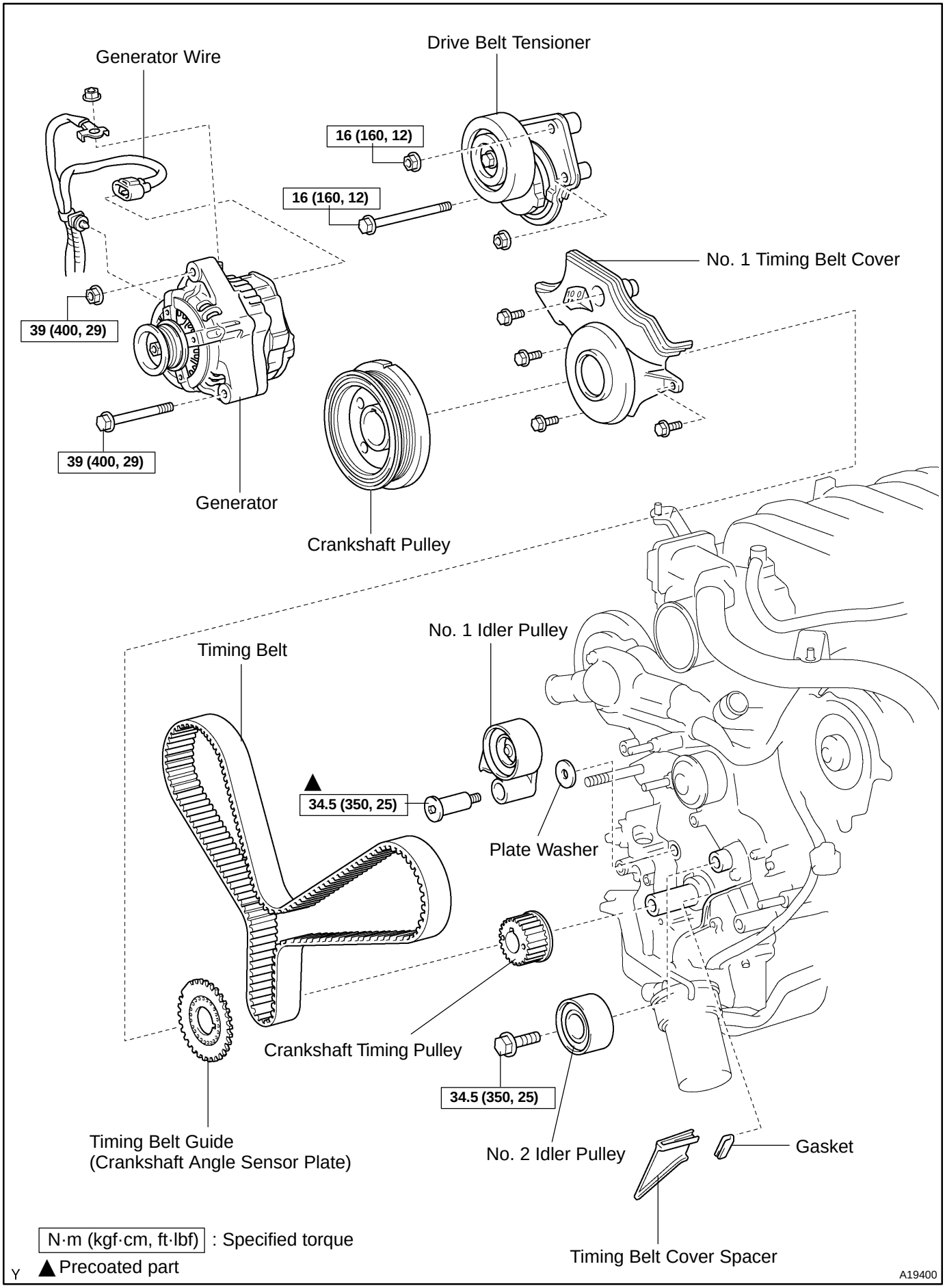
Generator Wire
Drive Belt Tensioner
16 (160, 12)
16 (160, 12)
No. 1 Timing Belt Cover
39 (400, 29)
39 (400, 29)
Generator
Crankshaft Pulley
Timing Belt
No. 1 Idler Pulley
34.5 (350, 25)
Plate Washer
Crankshaft Timing Pulley
34.5 (350, 25)
Timing Belt Guide
(Crankshaft Angle Sensor Plate)
No. 2 Idler Pulley
Gasket
Timing Belt Cover Spacer
N·m (kgf·cm, ft·lbf) : Specified torque
▲ Precoated part
Y
A19400

EM11S–06

REMOVAL

1. REMOVE ENGINE UNDER COVER
2. DRAIN ENGINE COOLANT
3. REMOVE RADIATOR ASSEMBLY (See page CO–18)
4. REMOVE THROTTLE BODY COVER
5. REMOVE INTAKE AIR CONNECTOR ASSEMBLY

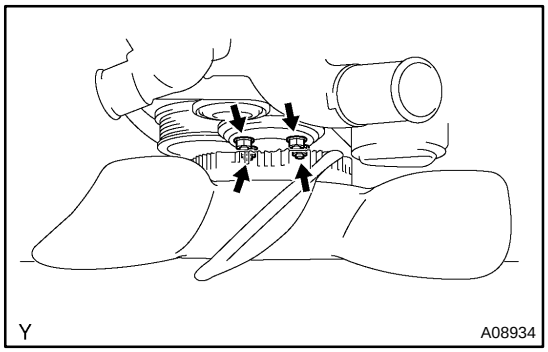

6. REMOVE DRIVE BELT, FAN, FLUID COUPLING AND FAN PULLEY

(a) Loosen the 4 nuts holding the fluid coupling to the fan bracket.
(b) Remove the drive belt (See page CH–7 or CH–19).
(c) Remove the 4 nuts, the fan, fluid coupling assembly and fan pulley.

7. DISCONNECT PS PUMP

Remove the 3 bolts, and disconnect the PS pump from the engine.

HINT:

Suspend the PS pump securely.

8. REMOVE DRIVE BELT IDLER PULLEY

Remove the pulley bolt, cover plate and idler pulley.

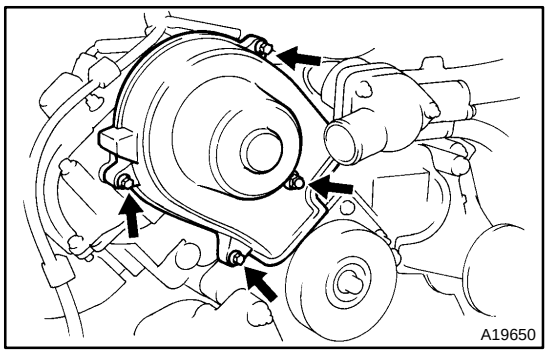

9. REMOVE RH NO. 3 TIMING BELT COVER

Remove the 3 bolts, nut and timing belt cover.

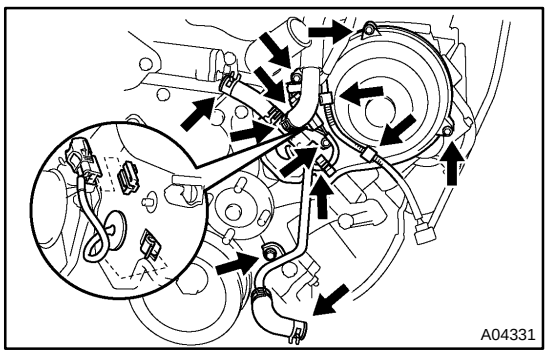

10. REMOVE LH NO. 3 TIMING BELT COVER

(a) Disconnect the engine wire from the 2 wire clamps.
(b) Remove the 4 bolts and nut.
(c) Disconnect the camshaft position sensor wire from the wire clamp on the timing belt cover.
(d) Disconnect the camshaft position sensor connector from the connector bracket.
(e) Disconnect the camshaft position sensor connector.
(f) Remove the wire grommet from the timing belt cover.
(g) Remove the LH No. 3 timing belt cover.

(h) Remove the bolt, nut and oil cooler pipe.

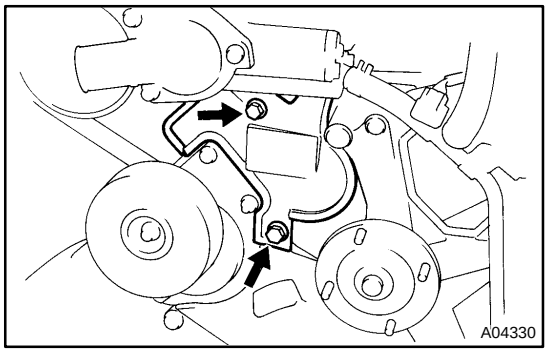

11. REMOVE NO. 2 TIMING BELT COVER

Remove the 2 bolts and timing belt cover.

12. DISCONNECT A/C COMPRESSOR FROM ENGINE (See page EM–72)

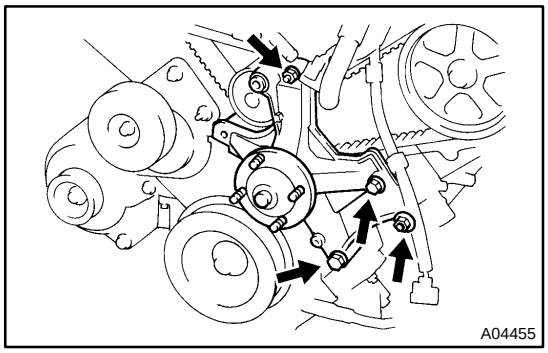

13. REMOVE FAN BRACKET

Remove the 2 bolts, 2 nuts and fan bracket.

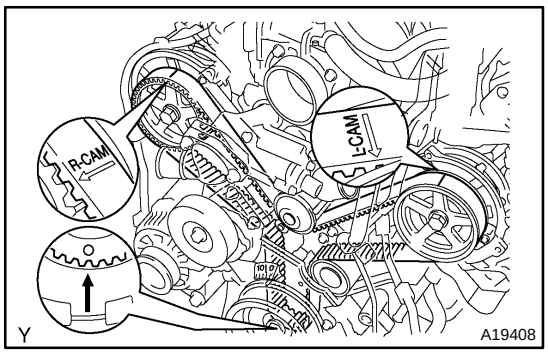

14. IF RE–USING TIMING BELT, CHECK INSTALLATION MARKS ON TIMING BELT

Check that there are 3 installation marks on the timing belt by turning the crankshaft pulley as shown in the illustration.

HINT:

If the installation marks have disappeared, place a new installation mark on the timing belt before removing each part.

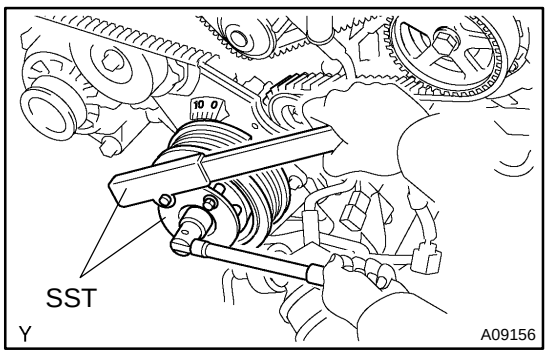

15. LOOSEN CRANKSHAFT PULLEY BOLT

Using SST, loosen the pulley bolt.

SST 09213–70011, 09330–00021

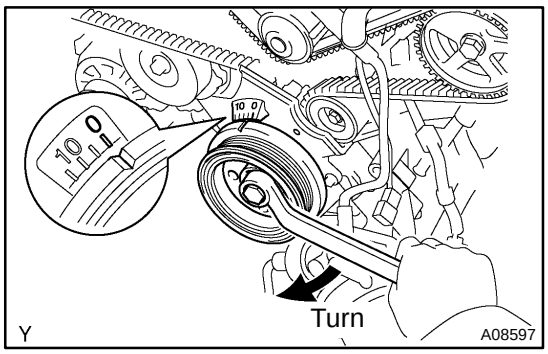

16. SET NO. 1 CYLINDER TO TDC/COMPRESSION

(a) Turn the crankshaft pulley and align its groove with timing mark 0 of the No. 1 timing belt cover.

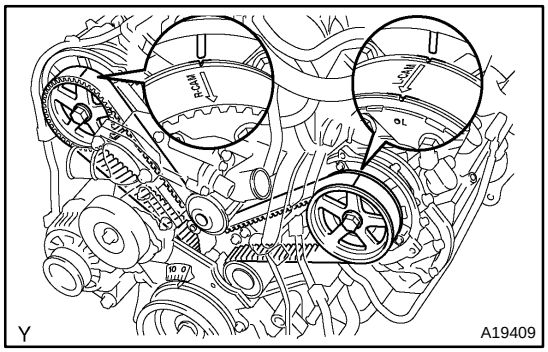

(b) Check that the timing marks of the camshaft timing pulleys and timing belt rear plates aligned.

If not, turn the crankshaft 1 revolution (360˚).

(c) Remove the crankshaft pulley bolt.

NOTICE:

Do not turn the crankshaft pulley.

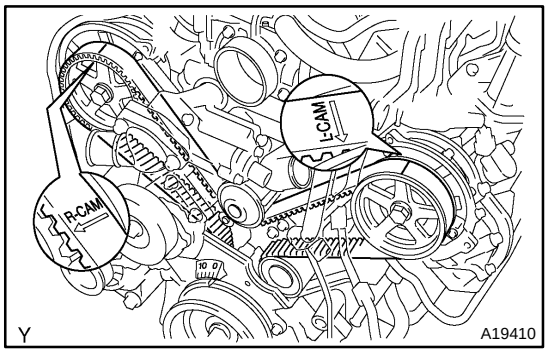

17. REMOVE TIMING BELT TENSIONER

HINT:

▲ When re–using timing belt:
If the installation marks have disappeared, before remove the timing belt, place 2 new installation marks on the timing belt to match the timing marks of the camshaft timing pulleys.

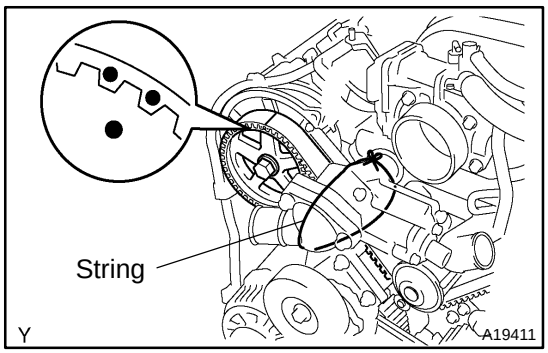

▲ When replacing timing belt tensioner only:
To avoid meshing of the timing pulley and timing belt, secure one of them with string. And place matchmarks on the timing belt and RH camshaft timing pulley.

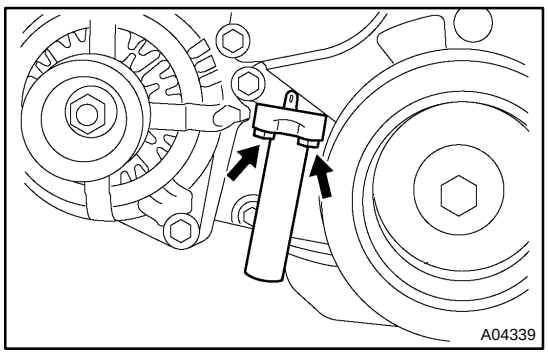

Alternately loosen the 2 bolts, and remove them, the belt tensioner and dust boot.

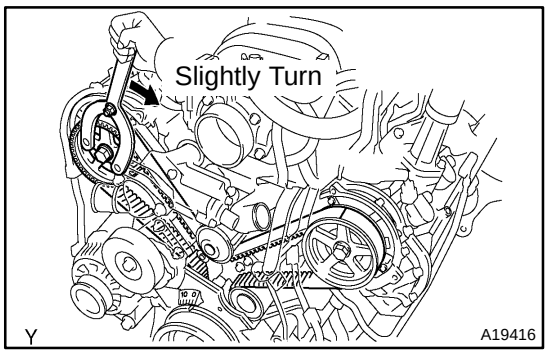

18. DISCONNECT TIMING BELT FROM CAMSHAFT TIMING PULLEYS

(a) Using SST, loosen the tension spring between the LH and RH camshaft timing pulleys by slightly turning the LH camshaft timing pulley clockwise.

SST 09960–10010 (09962–01000, 09963–01000)

(b) Disconnect the timing belt from the camshaft timing pulleys.

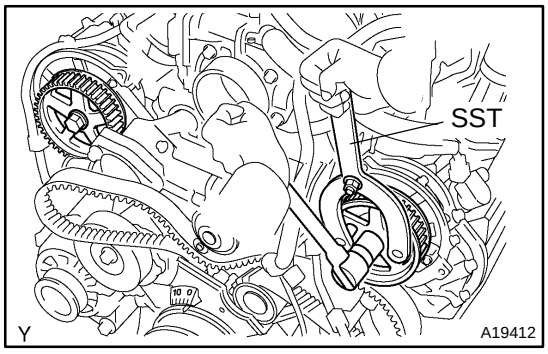

19. REMOVE CAMSHAFT TIMING PULLEYS

Using SST, remove the bolt and timing pulley. Remove the 2 timing pulleys.

SST 09960–10010 (09962–01000, 09963–01000)

20. REMOVE GENERATOR (See page CH–7 or CH–19)

21. REMOVE DRIVE BELT TENSIONER

Remove the bolt, 2 nuts and belt tensioner.

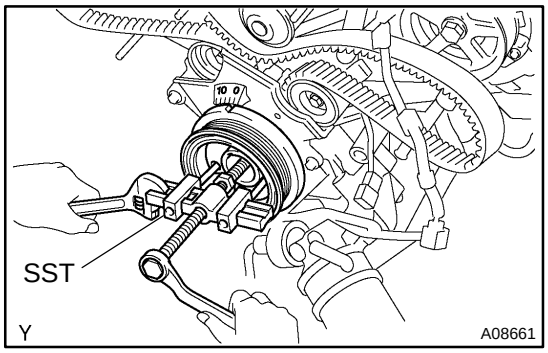

22. REMOVE CRANKSHAFT PULLEY

Using SST, remove the crankshaft pulley.

SST 09950–50013 (09951–05010, 09952–05010, 09953–05010, 09953–05020, 09954–05021)

NOTICE:

Do not turn the crankshaft pulley.

23. REMOVE NO. 1 TIMING BELT COVER

Remove the 4 bolts and timing belt cover.

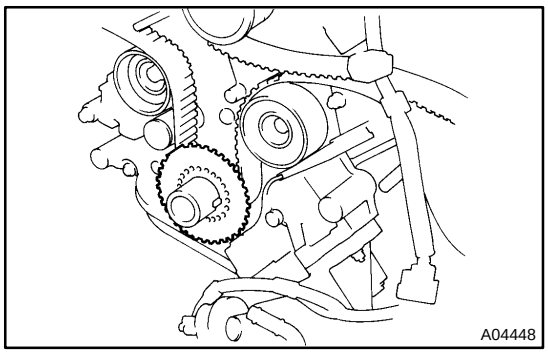

24. REMOVE TIMING BELT GUIDE

25. REMOVE TIMING BELT COVER SPACER

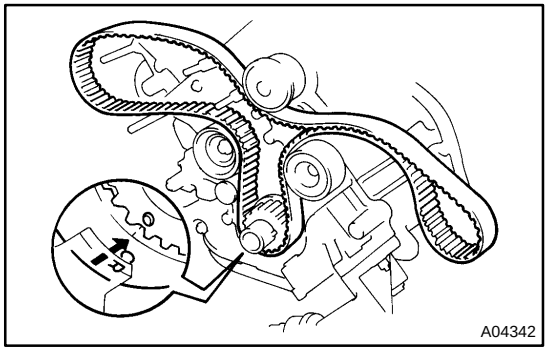

26. REMOVE TIMING BELT

HINT:

If re–using the belt and the installation mark has disappeared from it, place a new installation mark on the timing belt to the match the dot mark of the crankshaft timing pulley.

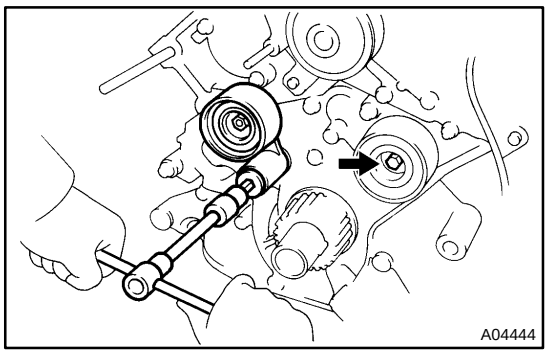

27. REMOVE NO. 1 IDLER PULLEY

Using a 10 mm hexagon wrench, remove the bolt, idler pulley and plate washer.

28. REMOVE NO. 2 IDLER PULLEY

Remove the bolt and idler pulley.

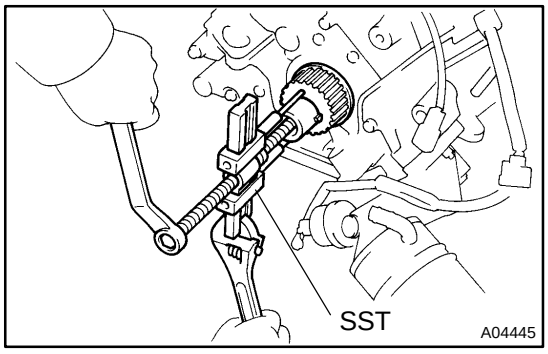

29. REMOVE CRANKSHAFT TIMING PULLEY

Using SST, remove the timing pulley.

SST 09950–50013 (09951–05010, 09952–05010, 09953–05010, 09953–05020, 09954–05011)

NOTICE:

Do not turn the timing pulley.

EM0KX–03

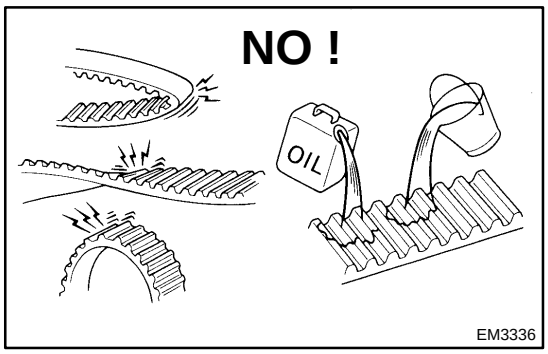

INSPECTION

1. INSPECT TIMING BELT

NOTICE:

- **Do not bend, twist or turn the timing belt inside out.**
- **Do not allow the timing belt to come into contact with oil, water or steam.**
- **Do not utilize timing belt tension when installing or removing the mount bolt of the camshaft timing pulley.**

If there is any defect, as shown in the illustration, check these points:

(a) Premature parting
- Check for proper installation.
- Check the timing cover gasket for damage and proper installation.

(b) If the belt teeth are cracked or damaged, check to see if either camshaft is locked.

(c) If there is noticeable wear or cracks on the belt face, check to see if there are nicks on the side of the idler pulley lock and water pump.

(d) If there is wear or damage on even one side of the belt, check the belt guide and the alignment of each pulley.

(e) If there is noticeable wear on the belt teeth, check timing cover for damage and for foreign material on the pulley teeth.

If necessary, replace the timing belt.

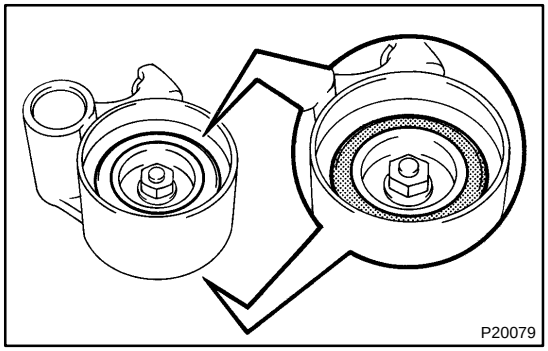

2. INSPECT IDLER PULLEYS

(a) Visually check the seal portion of the idler pulley for oil leakage.

If leakage is found, replace the idler pulley.

(b) Check that the idler pulley turns smoothly.

If necessary, replace the idler pulley.

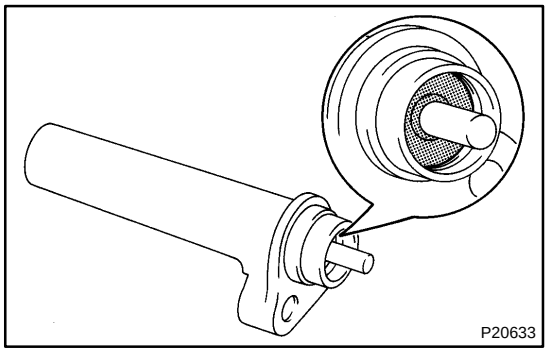

3. INSPECT TIMING BELT TENSIONER

(a) Visually check the seal portion of the tensioner for oil leakage.

HINT:

If there is only the faintest trace of oil on the seal on the push rod side, the tensioner is all right.

If leakage is found, replace the tensioner.

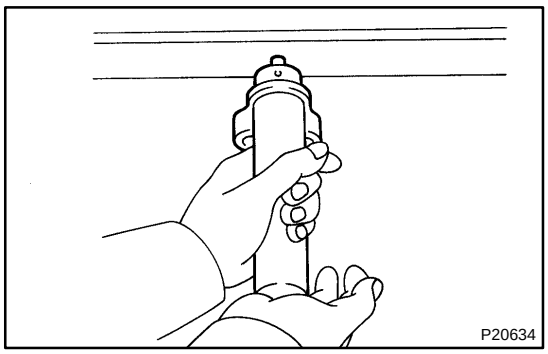

(b) Hold the tensioner with both hands and push the push rod strongly as shown to check that it doesn't move.

If the push rod moves, replace the tensioner.

NOTICE:

Never hold the tensioner push rod facing downward.

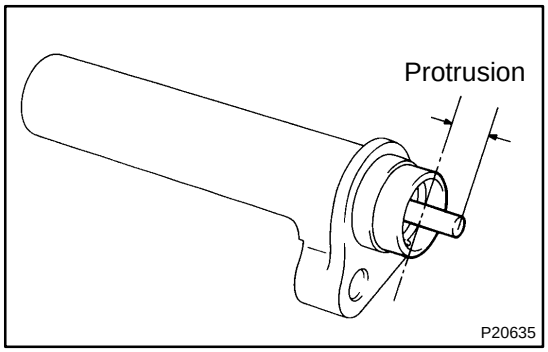

(c) Measure the protrusion of the push rod from the housing end.

Protrusion: 10.5 – 11.5 mm (0.413 – 0.453 in.)

If the protrusion is not as specified, replace the tensioner.

4. INSPECT WATER PUMP (See page CO–7)

EM0KY–08

INSTALLATION

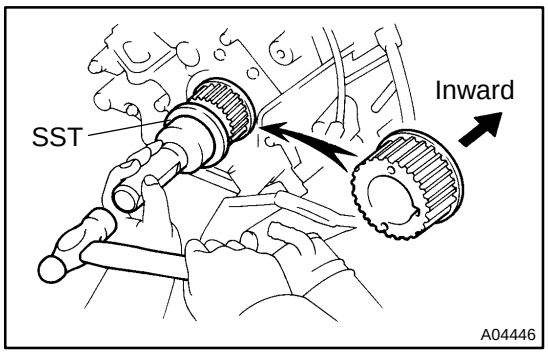

1. INSTALL CRANKSHAFT TIMING PULLEY

(a) Align the timing pulley set key with the key groove of the pulley.

(b) Using SST and a hammer, tap in the timing pulley, facing the flange side inward.
SST 09223–46011

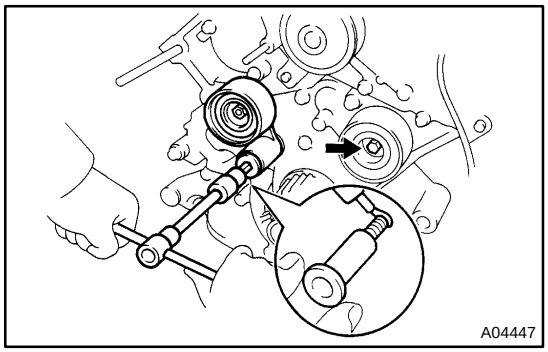

2. INSTALL NO. 1 IDLER PULLEY

(a) Apply adhesive 2 or 3 threads of the pivot bolt.
Adhesive:
Part No. 08833–00080, THREE BOND 1344, LOCTITE 242 or equivalent

(b) Using a 10 mm hexagon wrench, install the plate washer and idler pulley with the pivot bolt.
Torque: 34.5 N·m (350 kgf·cm, 25 ft·lbf)

(c) Check that the idler pulley moves smoothly.

3. INSTALL NO. 2 IDLER PULLEY

(a) Install the idler pulley with the bolt.
Torque: 34.5 N·m (350 kgf·cm, 25 ft·lbf)

(b) Check that the idler pulley moves smoothly.

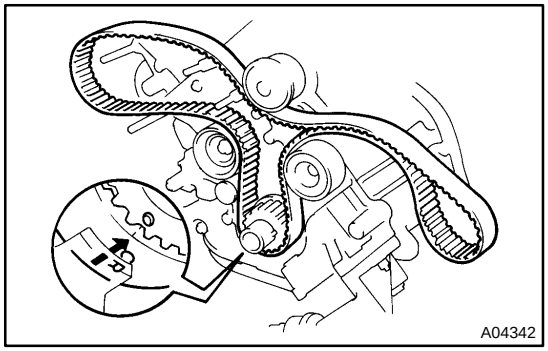

4. TEMPORARILY INSTALL TIMING BELT

NOTICE:

The engine should be cold.

(a) Remove any oil or water on the crankshaft pulley, oil pump pulley, water pump pulley, No. 1 idler pulley and No. 2 idler pulley, and keep them clean.

NOTICE:

Only wipe the pulleys; do not use any cleansing agent.

(b) Align the installation mark on the timing belt with the timing mark of the crankshaft timing pulley.

(c) Install the timing belt on the crankshaft timing pulley, No. 1 idler pulley and No. 2 idler pulley.

5. INSTALL TIMING BELT COVER SPACER

(a) Install the gasket to the cover spacer.

(b) Install the cover spacer.

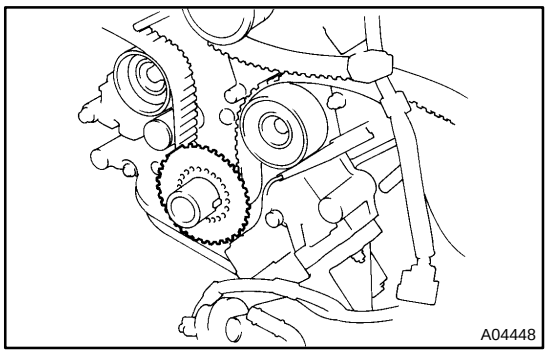

6. INSTALL TIMING BELT GUIDE

Install the belt guide, facing the cup side outward.

7. INSTALL NO. 1 TIMING BELT COVER

Install the timing belt cover with the 4 bolts.

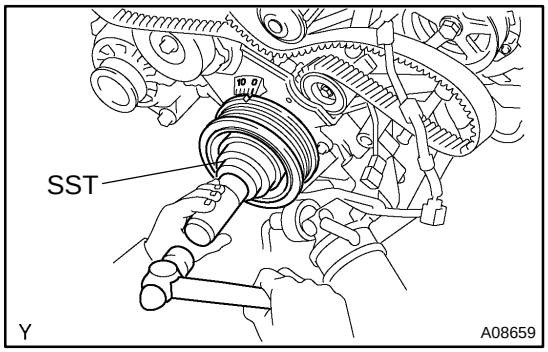

8. INSTALL CRANKSHAFT PULLEY

(a) Align the pulley set key with the key groove of the crankshaft pulley.

(b) Using SST and a hammer, tap in the crankshaft pulley.
SST 09223–46011

9. INSTALL DRIVE BELT TENSIONER

Install the belt tensioner with the bolt and 2 nuts.

Torque: 16 N·m (160 kgf·cm, 12 ft·lbf)

HINT:

Use a bolt 106 mm (4.18 in.) in length.

10. INSTALL GENERATOR (See page CH–16 or CH–28)

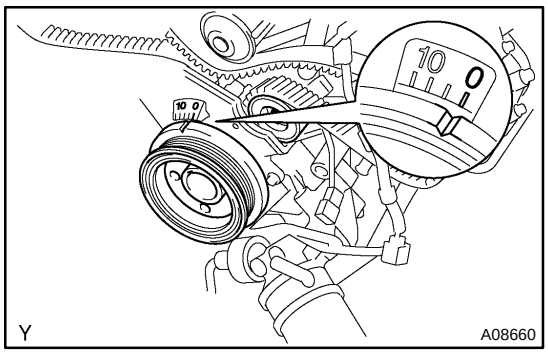

11. CHECK CRANKSHAFT PULLEY POSITION

Check that the timing mark of the crankshaft pulley is aligned with timing mark ”0” of the No. 1 timing belt cover.

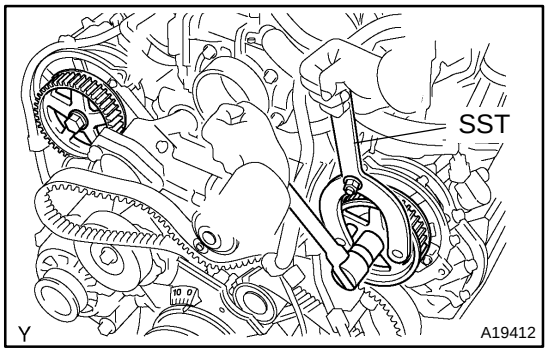

12. INSTALL CAMSHAFT TIMING PULLEYS

(a) Align the camshaft knock pin with the knock pin groove of the timing pulley, and slide on the timing pulley.

(b) Using SST, install the pulley bolt.
SST 09960–10010 (09962–01000, 09963–01000)
Torque: 108 N·m (1,100 kgf·cm, 80 ft·lbf)

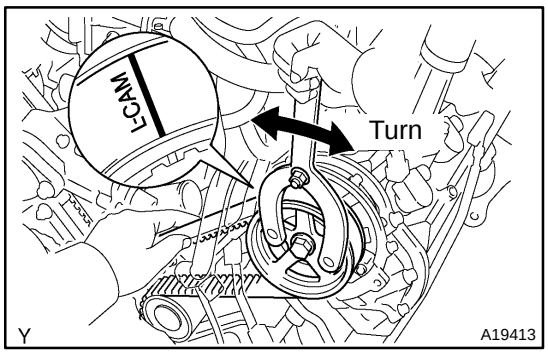

13. CONNECT TIMING BELT TO LH CAMSHAFT TIMING PULLEY

(a) Remove any oil or water on the LH camshaft timing pulley, and keep it clean.

NOTICE:

Only wipe the pulleys; do not use any cleansing agent.

(b) Turn the LH camshaft timing pulley. Align the installation mark on the timing belt with the timing mark of the camshaft timing pulley, and hang the timing belt on the LH camshaft timing pulley.

(c) Turn the LH camshaft timing pulley counterclockwise until there is tension between the crankshaft timing pulley and LH camshaft timing pulley.

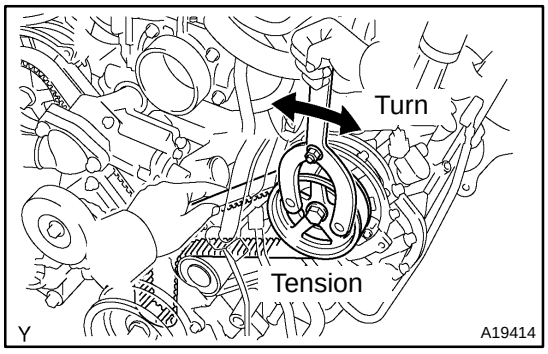

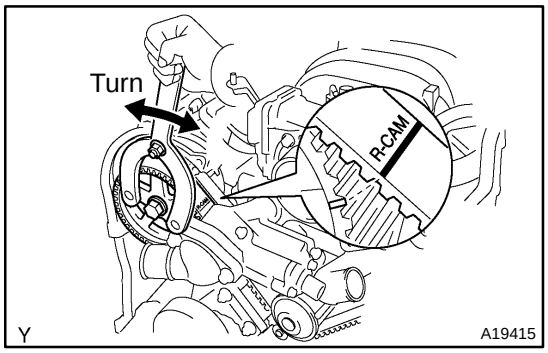

14. CONNECT TIMING BELT TO RH CAMSHAFT TIMING PULLEY

(a) Remove any oil or water on the RH camshaft timing pulley and water pump pulley, and keep them clean.

NOTICE:

Only wipe the pulleys; do not use any cleansing agent.

(b) Turn the RH camshaft timing pulley. Align the installation mark on the timing belt with the timing mark of the camshaft timing pulley, and hang the timing belt on the RH camshaft timing pulley.

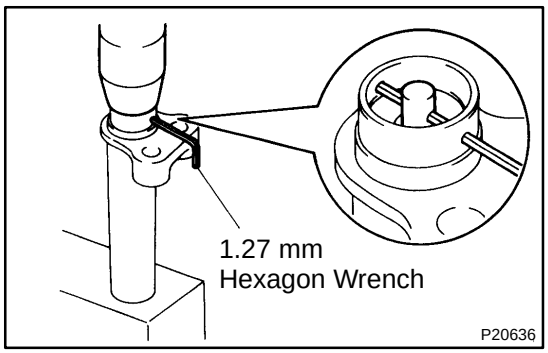

15. SET TIMING BELT TENSIONER

(a) Using a press, slowly press in the push rod using 981 – 9,807 N (100 – 1,000 kgf, 220 – 2,205 lbf) of pressure.

(b) Align the holes of the push rod and housing, pass a 1.27 mm hexagon wrench through the holes to keep the setting position of the push rod.

(c) Release the press.

(d) Install the dust boot to the belt tensioner.

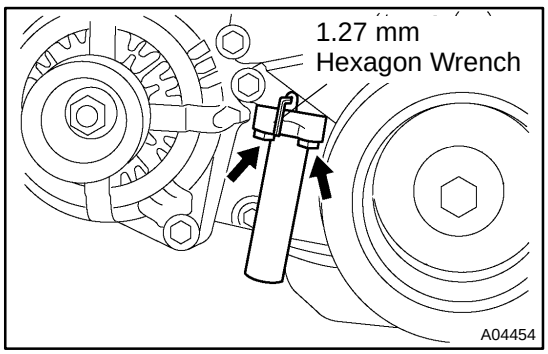

16. INSTALL TIMING BELT TENSIONER

(a) Temporarily install the belt tensioner with the 2 bolts.

(b) Alternately tighten the 2 bolts.

Torque: 26 N·m (270 kgf·cm, 19 ft·lbf)

(c) Using pliers, remove the 1.27 mm hexagon wrench from the belt tensioner.

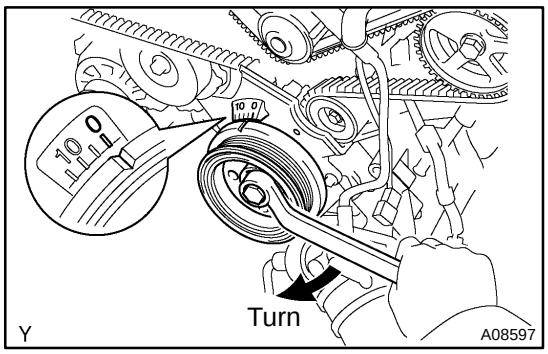

17. CHECK VALVE TIMING

(a) Temporarily install the crankshaft pulley bolt.

(b) Slowly turn the crankshaft pulley 2 revolutions from TDC to TDC.

NOTICE:

Always turn the crankshaft pulley clockwise.

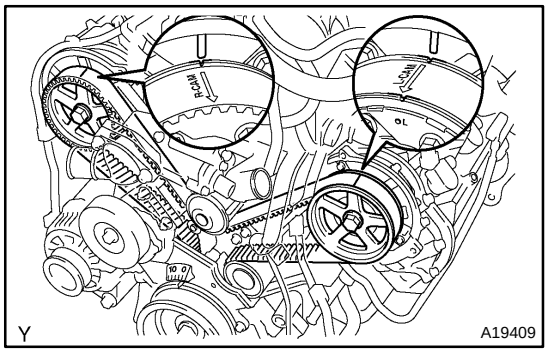

(c) Check that each pulley aligns with the timing marks as shown in the illustration.

If the timing marks do not align, remove the timing belt and reinstall it.

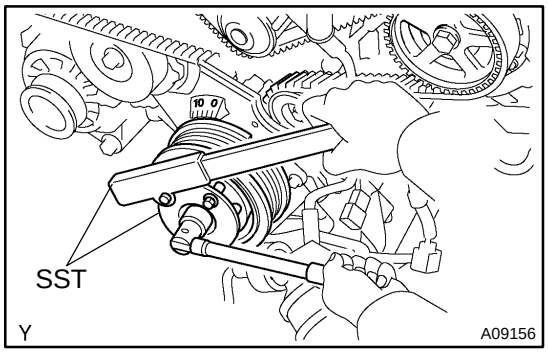

18. TIGHTEN CRANKSHAFT PULLEY BOLT

Using SST, install the pulley bolt.

SST 09213–70011, 09330–00021

Torque: 245 N·m (2,500 kgf·cm, 181 ft·lbf)

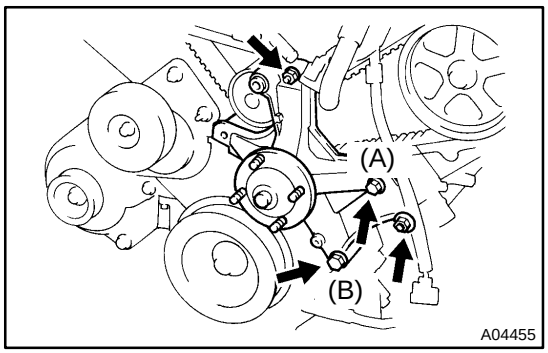

19. INSTALL FAN BRACKET

Install the fan bracket with the 2 bolts and 2 nuts.

Torque:

16 N·m (160 kgf·cm, 12 ft·lbf) for (A) for 12 mm head

32 N·m (330 kgf·cm, 24 ft·lbf) for (B) for 14 mm head

HINT:

Each bolt length is indicated in the illustration.

Bolt Length:

106 mm (4.17 in.) for 12 mm head (A)

114 mm (4.49 in.) for 14 mm head (B)

20. INSTALL A/C COMPRESSOR (See page EM–76)

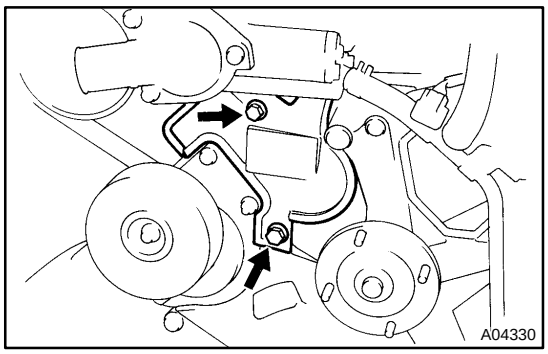

21. INSTALL NO. 2 TIMING BELT COVER

Install the timing belt cover with the 2 bolts.

Torque: 16 N·m (160 kgf·cm, 12 ft·lbf)

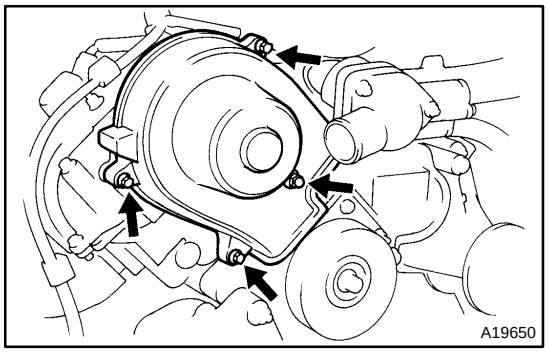

22. INSTALL RH NO. 3 TIMING BELT COVER

(a) Fit the timing belt cover, matching it with the fan bracket.

(b) Install the timing belt cover with the 3 bolts and nut.

Torque: 7.5 N·m (80 kgf·cm, 66 in.·lbf)

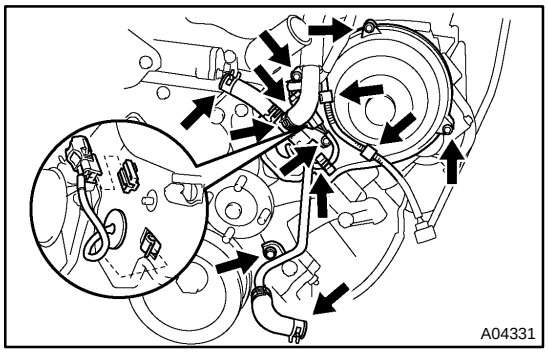

23. INSTALL LH NO. 3 TIMING BELT COVER

(a) Install the oil cooler pipe with the bolt and nut.

(b) Run the camshaft position sensor wire through the timing belt cover hole.

(c) Fit the timing belt cover, matching it with the fan bracket.

(d) Install the timing belt cover with the 4 bolts and nut.

Torque: 7.5 N·m (80 kgf·cm, 66 in.·lbf)

(e) Install the wire grommet to the timing belt cover.

(f) Install the camshaft position sensor connector to the connector bracket.

(g) Connect the camshaft position sensor connector.

(h) Install the sensor wire to the wire clamp on the timing belt cover.

(i) Install the engine wire to the 2 wire clamps on the timing belt cover.

24. INSTALL DRIVE BELT IDLER PULLEY

Install the idler pulley and cover plate with the bolt.

Torque: 39 N·m (400 kgf·cm, 29 ft·lbf)

25. INSTALL PS PUMP

Install the PS pump with the 3 bolts.

Torque: 17 N·m (175 kgf·cm, 13 ft·lbf)

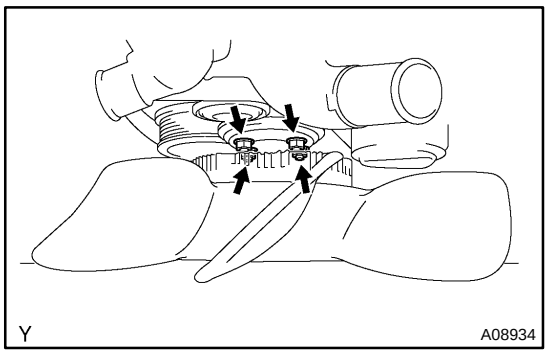

26. INSTALL FAN PULLEY, FAN, FLUID COUPLING AND DRIVE BELT

(a) Temporarily install the fan pulley, the fan, fluid coupling assembly with the 4 nuts.

(b) Install the drive belt (See page CH–16 or CH–28).

(c) Tighten the 4 nuts holding the fluid coupling to the fan bracket.

Torque: 21 N·m (215 kgf·cm, 16 ft·lbf)

27. INTAKE AIR CONNECTOR ASSEMBLY

28. INSTALL THROTTLE BODY COVER

29. INSTALL RADIATOR ASSEMBLY (See page CO–23)

30. FILL WITH ENGINE COOLANT

31. START ENGINE AND CHECK FOR LEAKS

32. RECHECK ENGINE COOLANT LEVEL

33. INSTALL ENGINE UNDER COVER

CYLINDER HEAD

COMPONENTS

EM11T–06

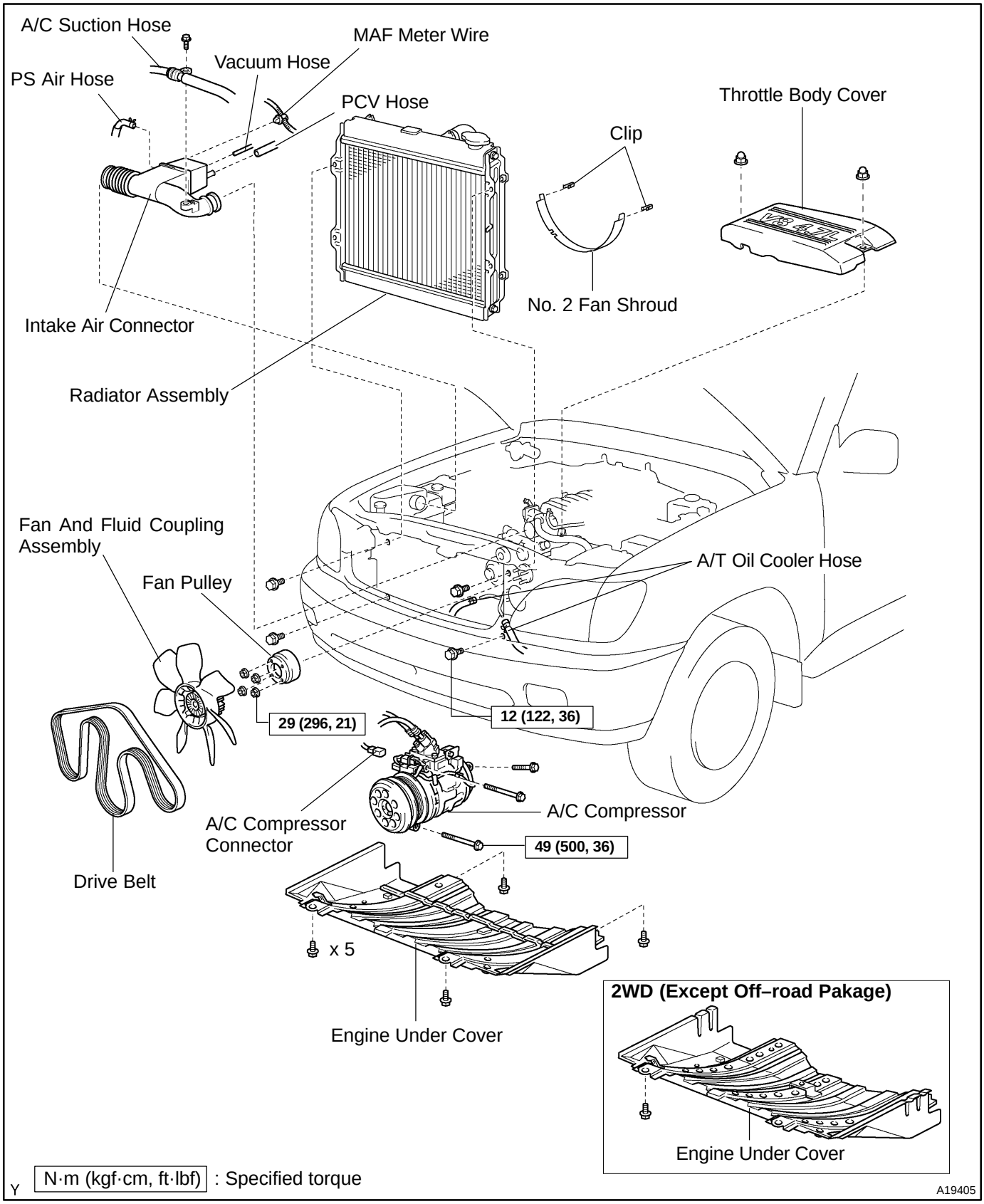

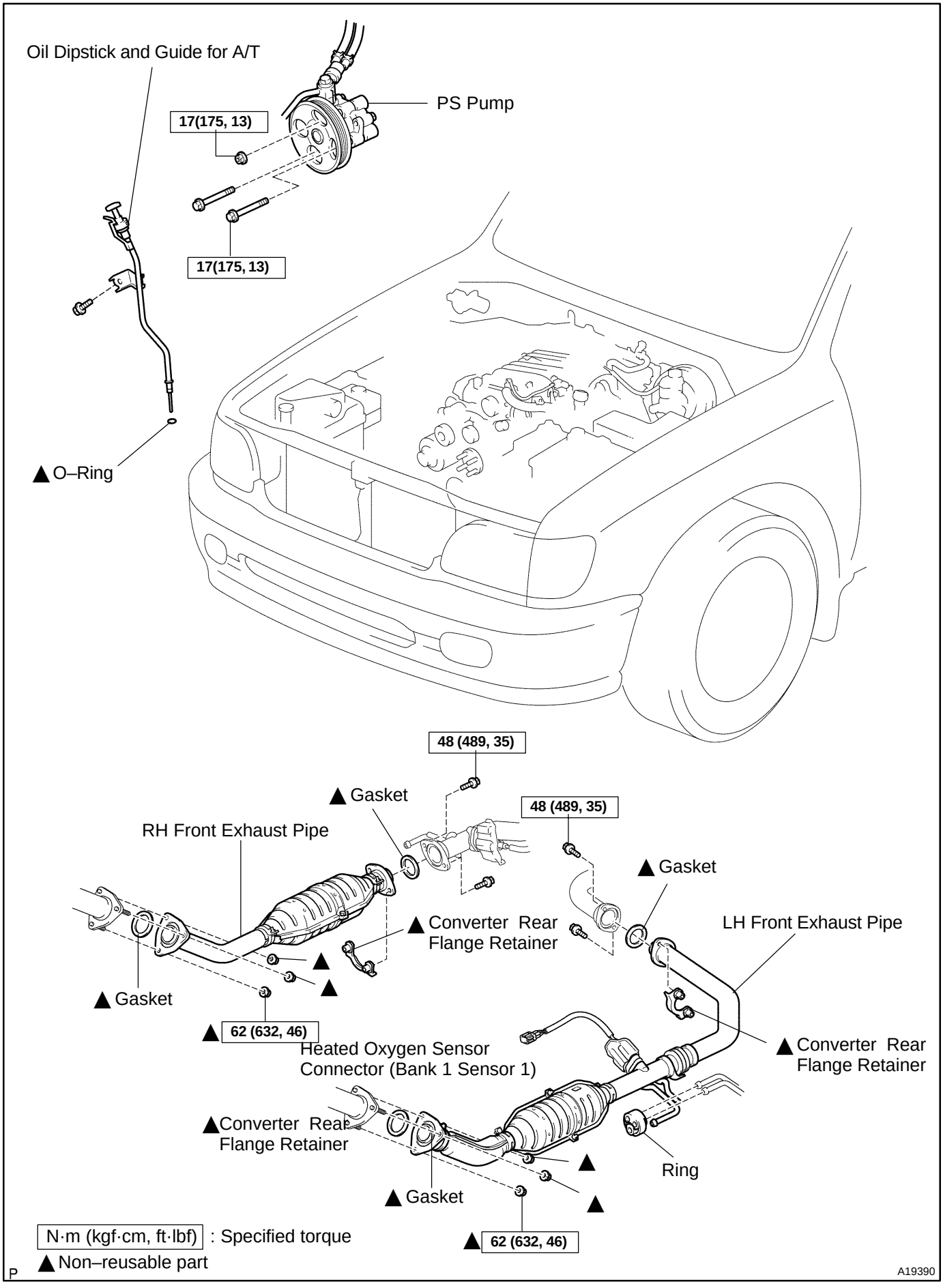
Oil Dipstick and Guide for A/T
PS Pump
17(175, 13)
17(175, 13)
▲O–Ring
48 (489, 35)
▲Gasket
48 (489, 35)
RH Front Exhaust Pipe
▲Gasket
▲Converter Rear Flange Retainer
LH Front Exhaust Pipe
▲Gasket
▲62 (632, 46)
Heated Oxygen Sensor Connector (Bank 1 Sensor 1)
▲Converter Rear Flange Retainer
▲Converter Rear Flange Retainer
Ring
▲Gasket
▲62 (632, 46)
N·m (kgf·cm, ft·lbf) : Specified torque
▲Non–reusable part
P
A19390

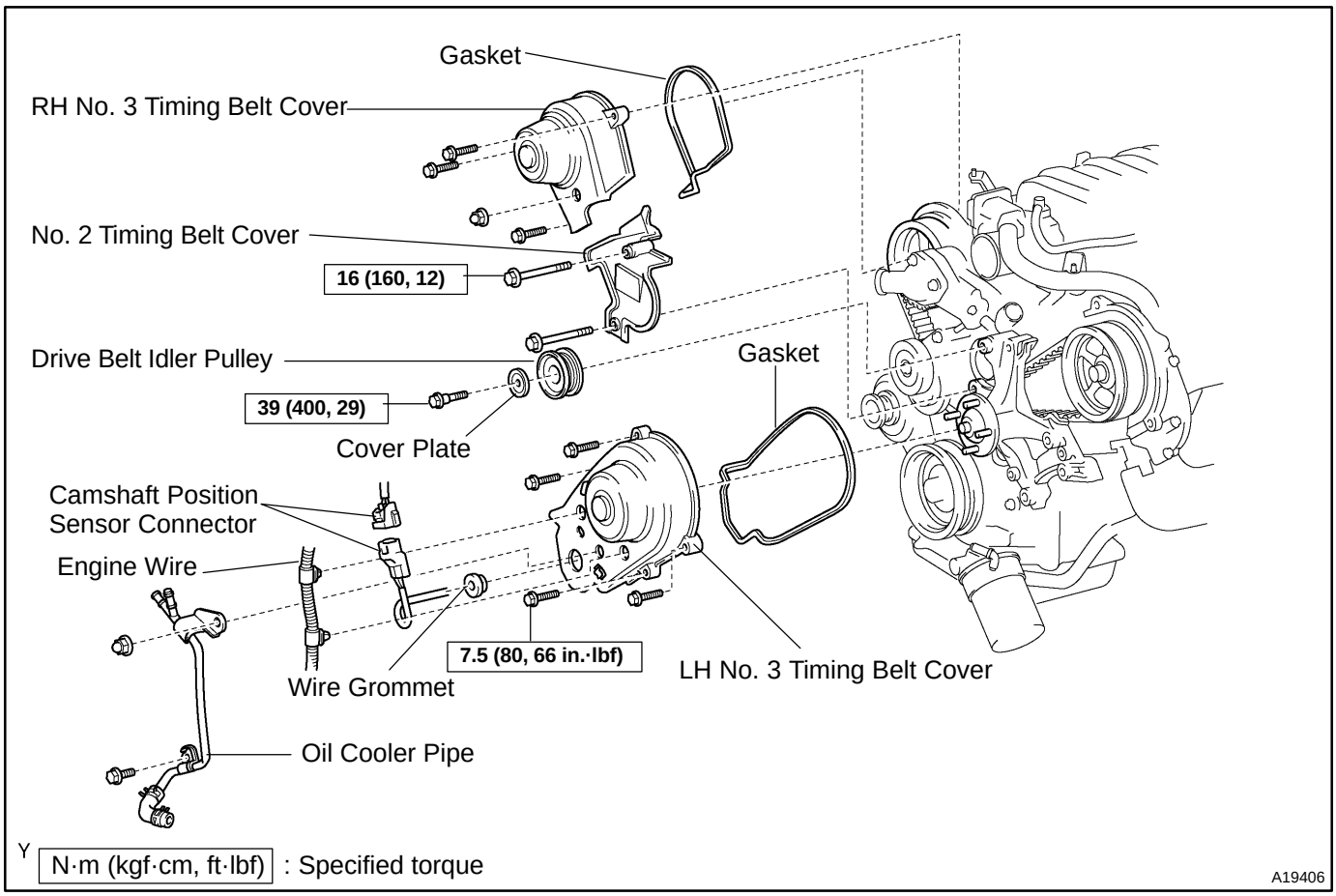
Gasket
RH No. 3 Timing Belt Cover
No. 2 Timing Belt Cover
16 (160, 12)
Drive Belt Idler Pulley
39 (400, 29)
Cover Plate
Gasket
Camshaft Position Sensor Connector
Engine Wire
7.5 (80, 66 in.·lbf)
Wire Grommet
LH No. 3 Timing Belt Cover
Oil Cooler Pipe
Y
N·m (kgf·cm, ft·lbf) : Specified torque
A19406

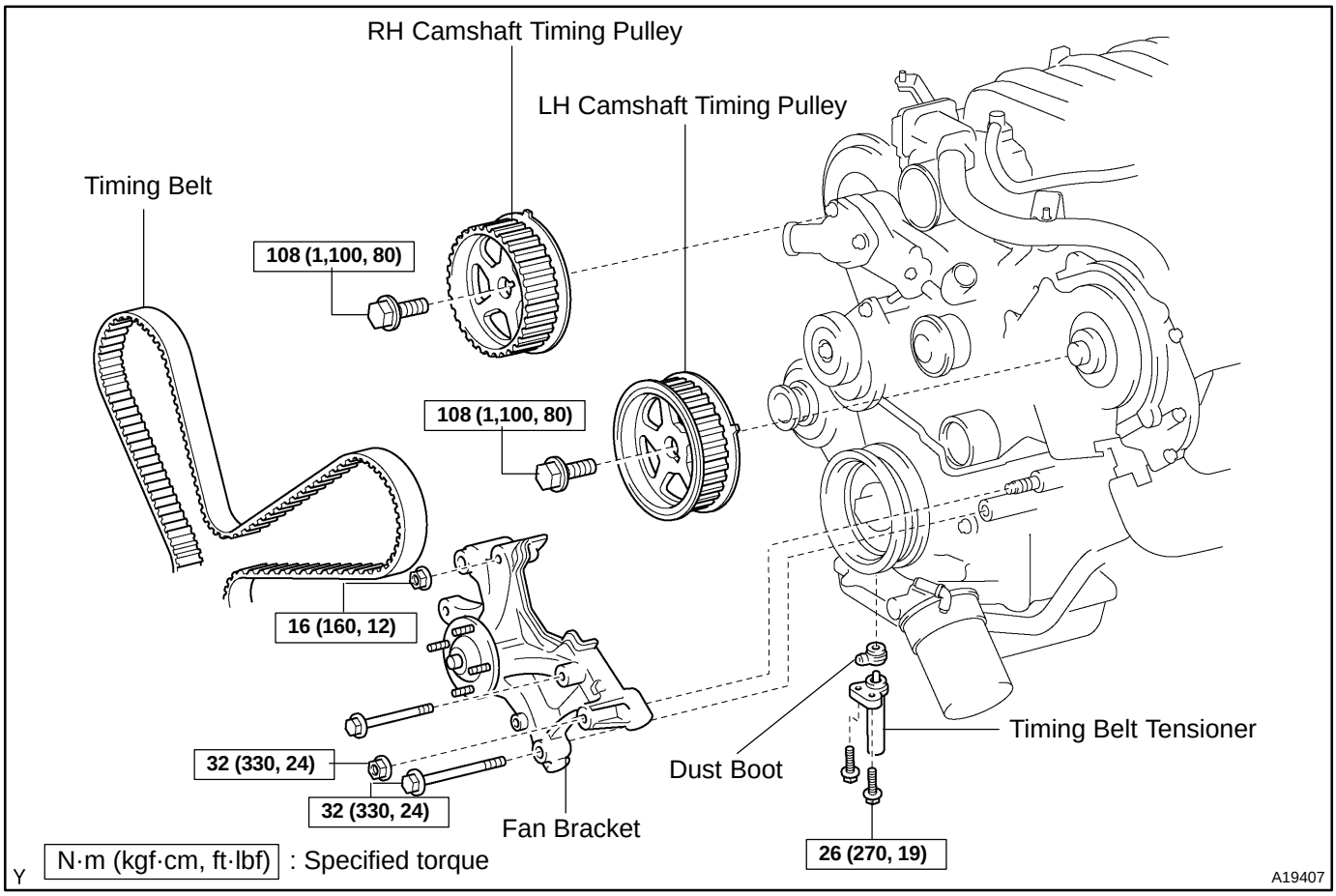
RH Camshaft Timing Pulley
LH Camshaft Timing Pulley
Timing Belt
108 (1,100, 80)
108 (1,100, 80)
16 (160, 12)
32 (330, 24)
32 (330, 24)
Fan Bracket
Dust Boot
Timing Belt Tensioner
26 (270, 19)
Y
N·m (kgf·cm, ft·lbf) : Specified torque
A19407

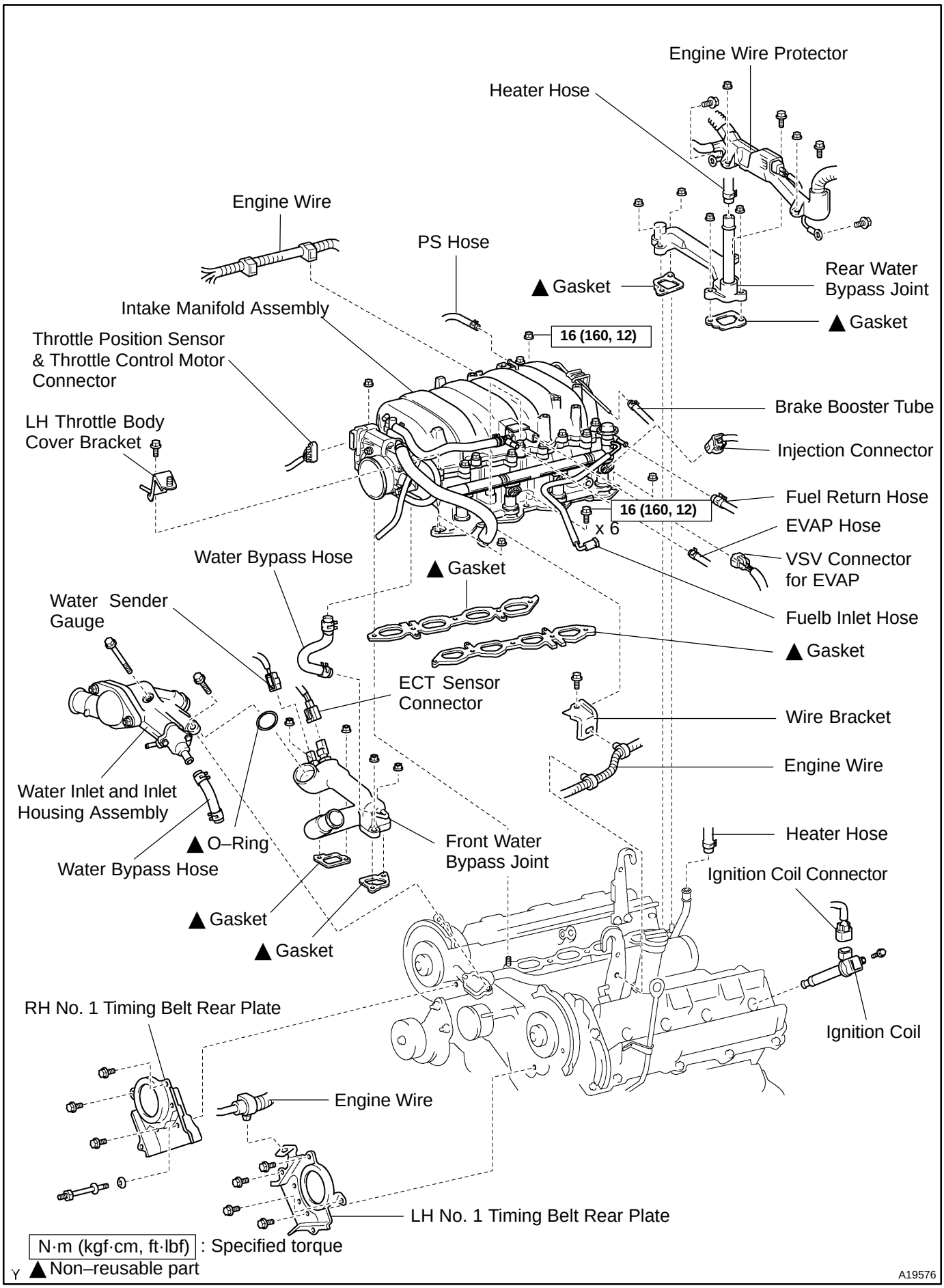
Engine Wire Protector
Heater Hose
Engine Wire
PS Hose
▲ Gasket
Rear Water Bypass Joint
▲ Gasket
Intake Manifold Assembly
16 (160, 12)
Throttle Position Sensor & Throttle Control Motor Connector
LH Throttle Body Cover Bracket
Brake Booster Tube
Injection Connector
Fuel Return Hose
16 (160, 12)
x 6
EVAP Hose
VSV Connector for EVAP
Water Bypass Hose
▲ Gasket
Water Sender Gauge
Fuelb Inlet Hose
▲ Gasket
ECT Sensor Connector
Wire Bracket
Engine Wire
Water Inlet and Inlet Housing Assembly
▲ O–Ring
Front Water Bypass Joint
Heater Hose
Water Bypass Hose
Ignition Coil Connector
▲ Gasket
▲ Gasket
RH No. 1 Timing Belt Rear Plate
Ignition Coil
Engine Wire
LH No. 1 Timing Belt Rear Plate
N·m (kgf·cm, ft·lbf) : Specified torque
▲ Non–reusable part
A19576

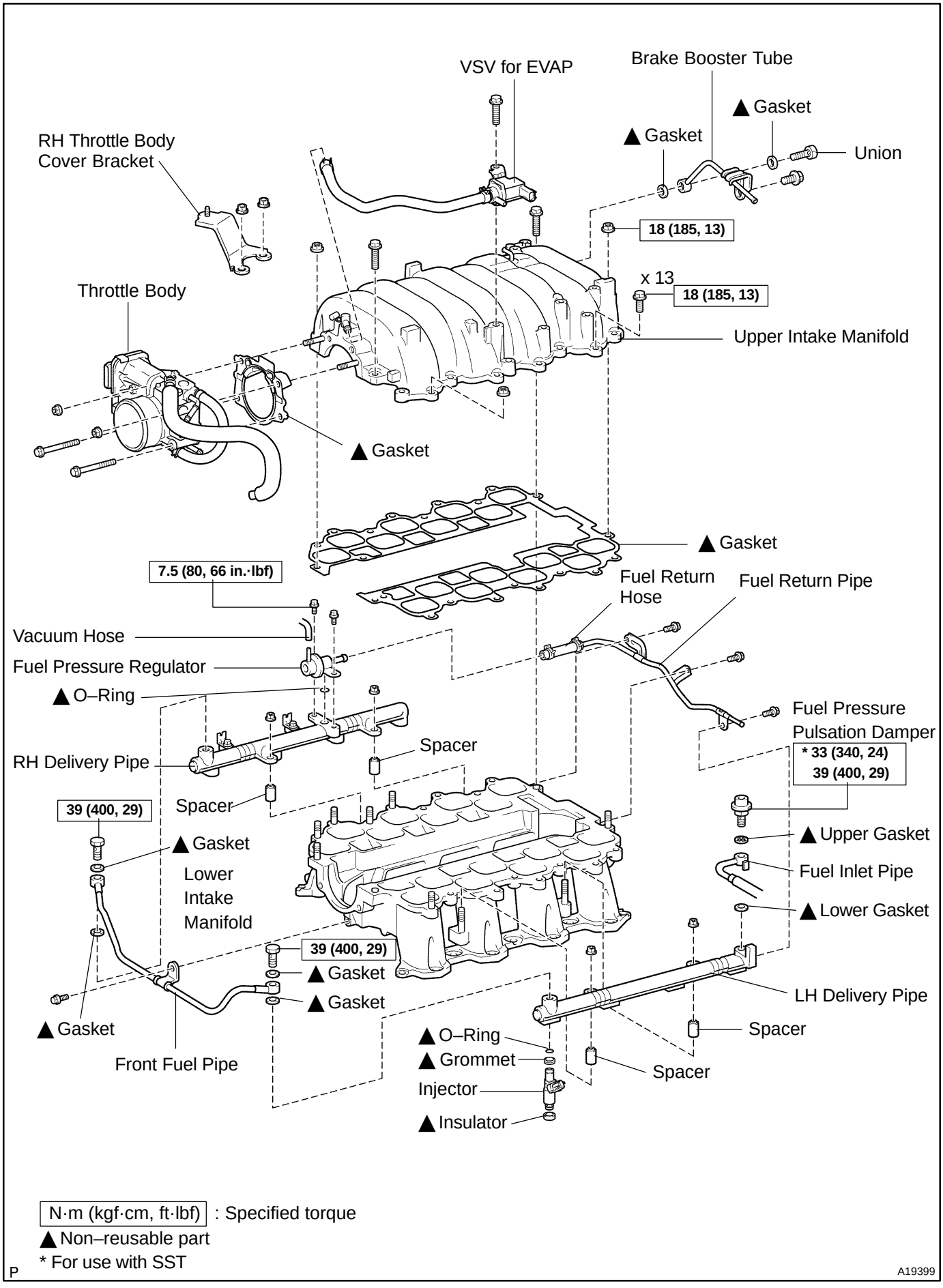
VSV for EVAP
Brake Booster Tube
▲ Gasket
▲ Gasket
Union
RH Throttle Body
Cover Bracket
18 (185, 13)
x 13
18 (185, 13)
Throttle Body
Upper Intake Manifold
▲ Gasket
▲ Gasket
7.5 (80, 66 in.·lbf)
Fuel Return
Hose
Fuel Return Pipe
Vacuum Hose
Fuel Pressure Regulator
▲ O–Ring
Fuel Pressure
Pulsation Damper
* 33 (340, 24)
39 (400, 29)
RH Delivery Pipe
Spacer
Spacer
39 (400, 29)
▲ Gasket
Lower
Intake
Manifold
▲ Upper Gasket
Fuel Inlet Pipe
▲ Lower Gasket
39 (400, 29)
▲ Gasket
▲ Gasket
LH Delivery Pipe
▲ Gasket
Front Fuel Pipe
▲ O–Ring
▲ Grommet
Injector
▲ Insulator
Spacer
Spacer
N·m (kgf·cm, ft·lbf) : Specified torque
▲ Non–reusable part
* For use with SST
P
A19399

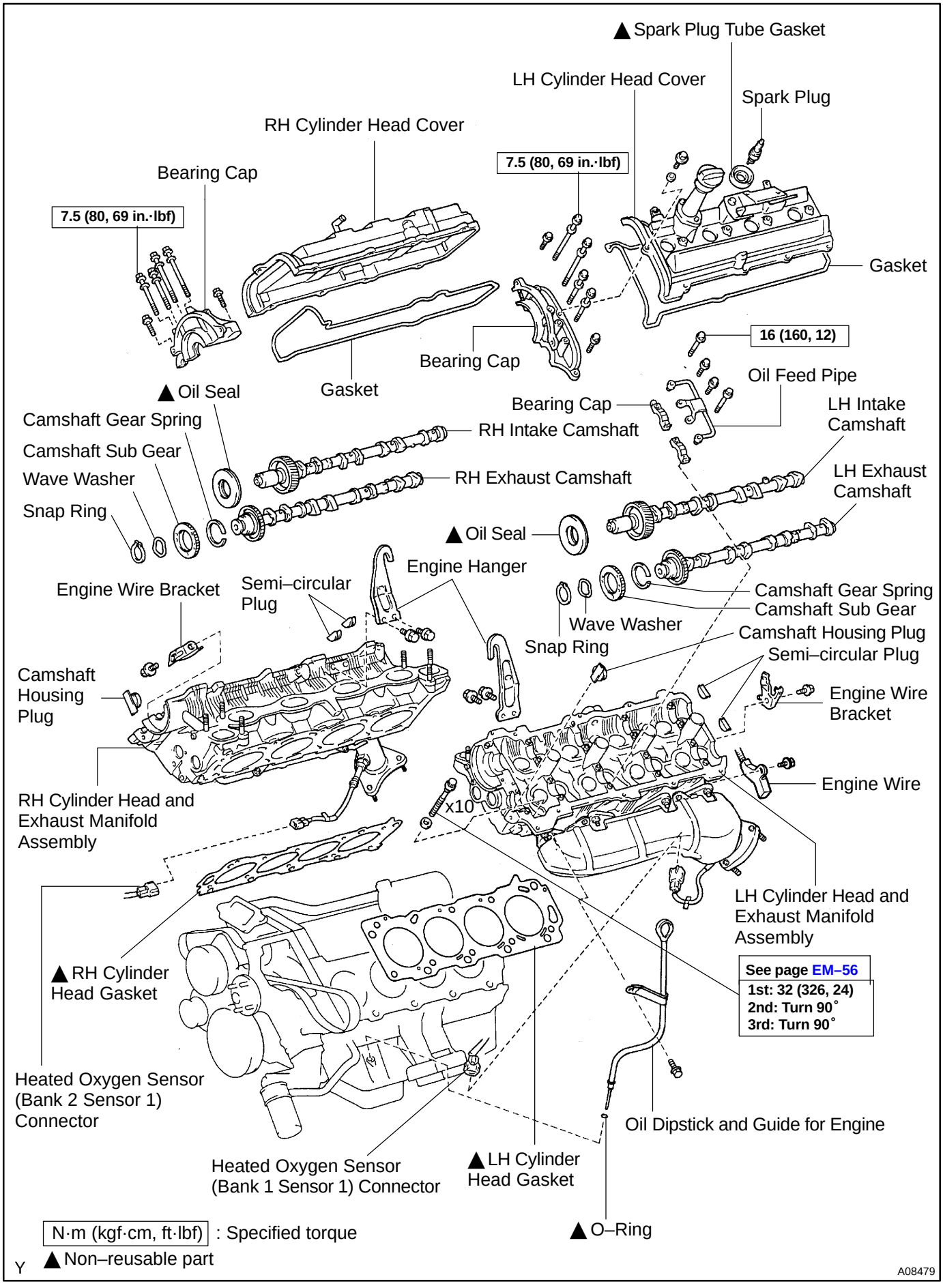
▲Spark Plug Tube Gasket
LH Cylinder Head Cover
Spark Plug
RH Cylinder Head Cover
Bearing Cap
7.5 (80, 69 in.·lbf)
7.5 (80, 69 in.·lbf)
Gasket
Bearing Cap
16 (160, 12)
Oil Feed Pipe
▲Oil Seal
Gasket
Bearing Cap
LH Intake Camshaft
Camshaft Gear Spring
RH Intake Camshaft
Camshaft Sub Gear
Wave Washer
RH Exhaust Camshaft
LH Exhaust Camshaft
Snap Ring
▲Oil Seal
Engine Hanger
Engine Wire Bracket
Semi–circular Plug
Camshaft Gear Spring
Camshaft Sub Gear
Wave Washer
Snap Ring
Camshaft Housing Plug
Semi–circular Plug
Camshaft Housing Plug
Engine Wire Bracket
Engine Wire
x10
RH Cylinder Head and Exhaust Manifold Assembly
LH Cylinder Head and Exhaust Manifold Assembly
See page EM–56
1st: 32 (326, 24)
2nd: Turn 90°
3rd: Turn 90°
▲RH Cylinder Head Gasket
Heated Oxygen Sensor (Bank 2 Sensor 1) Connector
Oil Dipstick and Guide for Engine
Heated Oxygen Sensor (Bank 1 Sensor 1) Connector
▲LH Cylinder Head Gasket
▲O–Ring
N·m (kgf·cm, ft·lbf) : Specified torque
▲Non–reusable part
Y
A08479

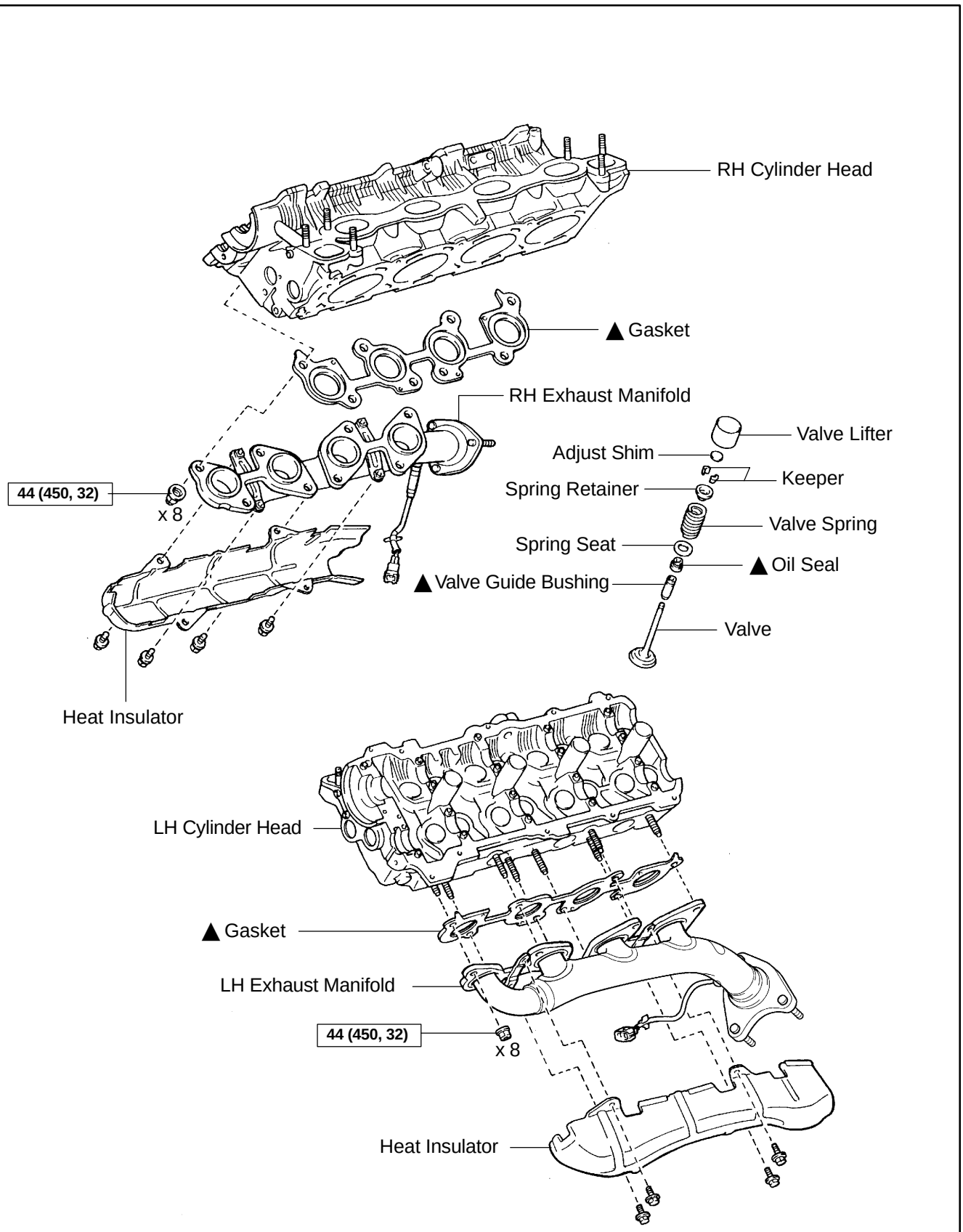
RH Cylinder Head
▲ Gasket
RH Exhaust Manifold
Valve Lifter
Adjust Shim
Keeper
Spring Retainer
Valve Spring
Spring Seat
▲ Oil Seal
▲ Valve Guide Bushing
Valve
44 (450, 32)
x 8
Heat Insulator
LH Cylinder Head
▲ Gasket
LH Exhaust Manifold
44 (450, 32)
x 8
Heat Insulator
N·m (kgf·cm, ft·lbf) : Specified torque
▲ Non–reusable part
A15219

EM1V4–01

REMOVAL

1. **DRAIN ENGINE COOLANT**
2. **REMOVE THROTTLE BODY COVER**
3. **DISCONNECT TIMING BELT FROM CAMSHAFT TIMING PULLEYS (See page EM–14)**

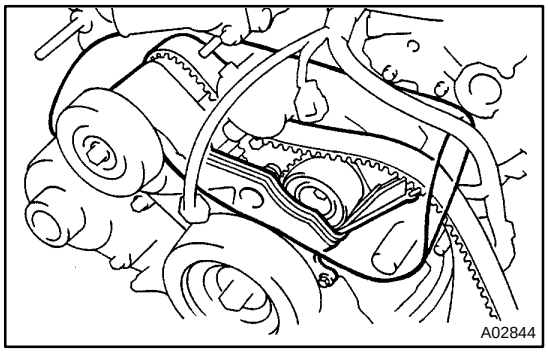

NOTICE:

- **Be careful not to drop anything inside the timing belt cover.**
- **Do not allow the belt to come into correct with oil, water or dust.**

4. **REMOVE CAMSHAFT TIMING PULLEYS (See page EM–14)**
5. **REMOVE CAMSHAFT POSITION SENSOR (See page IG–8)**
6. **DISCONNECT PS PUMP FROM ENGINE (See page EM–72)**
7. **REMOVE FRONT EXHAUST PIPE (See page EM–117)**
8. **REMOVE OIL DIPSTICK AND GUIDE FOR A/T**
9. **REMOVE IGNITION COILS (See page IG–5)**
10. **REMOVE TIMING BELT REAR PLATES**

(a) Remove the 3 bolts, stud bolt and RH No. 1 timing belt rear plates.
(b) Disconnect the wire clamp from the LH timing belt rear plate.
(c) Remove the 3 bolts, stud bolt and LH No. 1 timing belt rear plates.

11. **DISCONNECT FUEL INLET HOSE (See page SF–21) AND FUEL RETURN HOSE**
12. **DISCONNECT CONNECTORS FROM INTAKE MANIFOLD**

(a) Disconnect the throttle position sensor connector.
(b) Disconnect the accelerator pedal position sensor connector.
(c) Disconnect the throttle control motor connector.
(d) Disconnect the VSV connector for EVAP.
(e) Disconnect the 8 injector connectors.
(f) Disconnect the ECT sensor connector.
(g) Disconnect the water sender gauge connector.
(h) Disconnect the 8 ignition coil connectors.
(i) Disconnect the 2 heated oxygen sensor connectors.

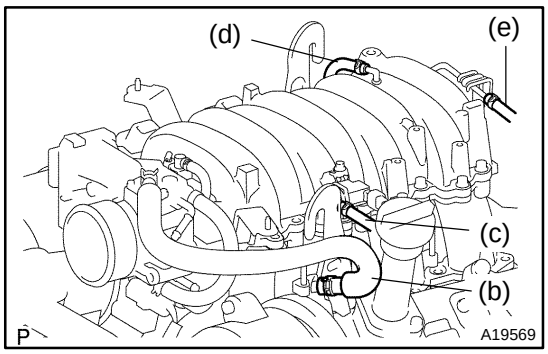

13. DISCONNECT HOSES FROM INTAKE MANIFOLD

(a) Disconnect the vacuum hose from the fuel pressure regulator.
(b) Disconnect the PCV hose from the PCV valve on the LH cylinder head.
(c) Disconnect the EVAP hose (from charcoal canister) from the VSV for the EVAP.
(d) Disconnect the PS air hose from the intake manifold.
(e) Disconnect the brake booster tube.

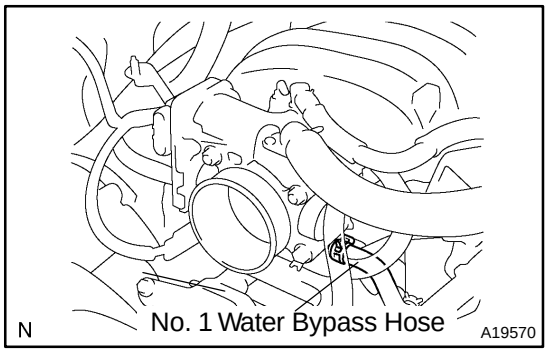

14. REMOVE INTAKE MANIFOLD ASSEMBLY

(a) Disconnect the No. 1 water bypass hose (from the front water bypass joint).

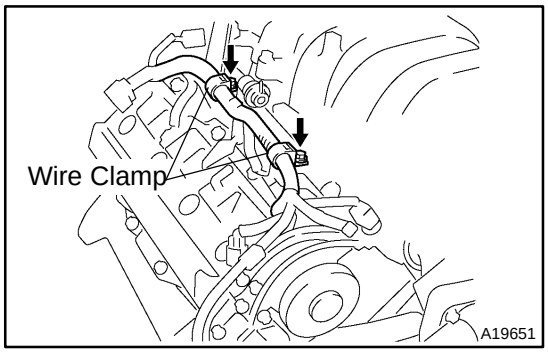

(b) Disconnect the 2 wire clamps from the wire clamp bracket on the RH delivery pipe.

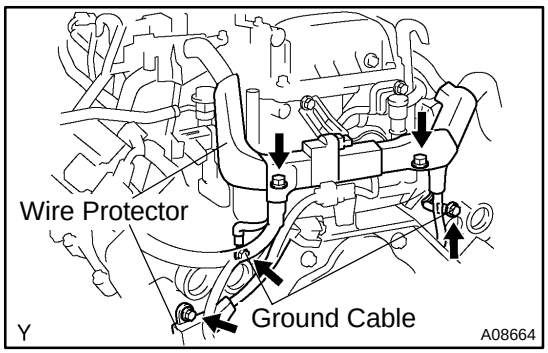

(c) Remove the 3 bolts holding the engine wire protector from the rear water bypass joint, RH and LH cylinder heads.
(d) Remove the guide for the A/T bracket from the LH and LH cylinder heads.
(e) Remove the 2 ground cables from the RH and LH cylinder heads.

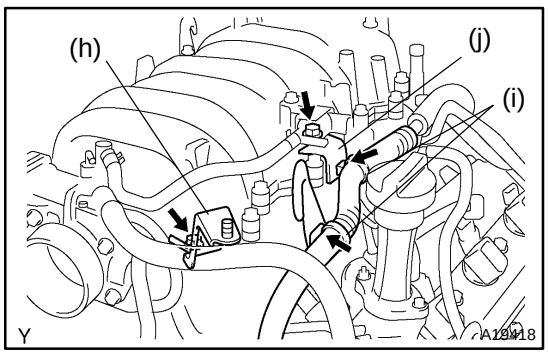

(f) Remove the LH throttle body cover bracket from the intake manifold.
(g) Disconnect the engine wire from the engine hanger and wire bracket.
(h) Remove the wire bracket from the intake manifold.

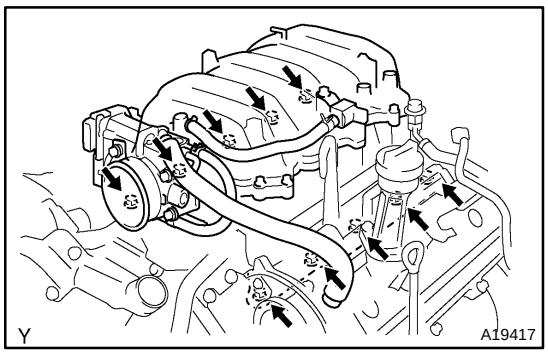

(i) Remove the 6 bolts, 4 nuts, the intake manifold assembly and 2 gaskets.

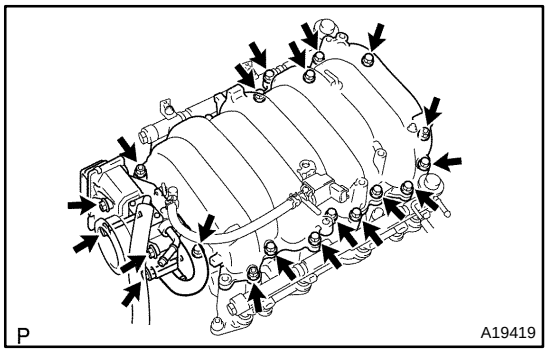

15. DISASSEMBLE UPPER AND LOWER INTAKE MANIFOLDS

(a) Remove the 2 nuts and LH throttle body cover bracket.
(b) Remove the throttle body (See page SF–32).
(c) Remove the 13 bolts, 3 nuts, upper intake manifold and gasket.
(d) Disconnect the EVAP hose from the upper intake manifold, and remove the VSV for EVAP.
(e) Remove the bolt, union, 2 gaskets and brake booster tube from the upper intake manifold.

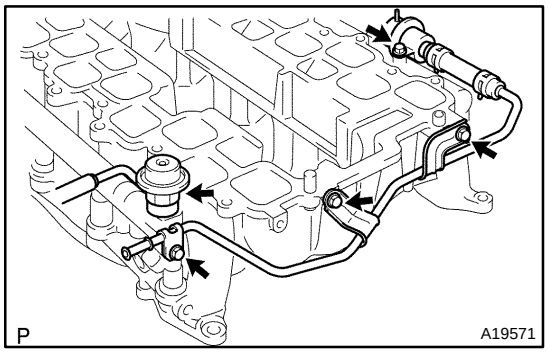

(f) Disconnect the fuel return hose from the fuel pressure regulator.
(g) Remove the 3 bolts holding the fuel return hose from the lower intake manifold.
(h) Remove the fuel pressure regulator, fuel pressure pulsation damper and 2 gaskets.
(i) Remove the bolt and rear fuel pipe.
(j) Remove the 2 delivery pipes and 8 injectors (See page SF–19).

16. REMOVE WATER INLET AND INLET HOUSING ASSEMBLY (See page CO–6)

17. REMOVE FRONT WATER BYPASS JOINT

Remove the 4 nuts, water bypass joint and 2 gaskets.

18. REMOVE REAR WATER BYPASS JOINT

Remove the 4 nuts, water bypass joint and 2 gaskets.

19. REMOVE ENGINE HANGERS

20. REMOVE CYLINDER HEAD COVERS

Remove the 18 bolts, seal washers, RH and LH cylinder head covers and 2 gaskets.

21. IF NECESSARY, REMOVE SEMI–CIRCULAR PLUGS AND CAMSHAFT HOUSING PLUGS

22. REMOVE CAMSHAFTS

NOTICE:

Since the thrust clearance of the camshaft is small, the camshaft must be kept level while it is being removed. If the camshaft is not kept level, the portion of the cylinder head receiving the shaft thrust may crack or be damaged, causing the camshaft to seize or break. To avoid this, the following steps should be carried out.

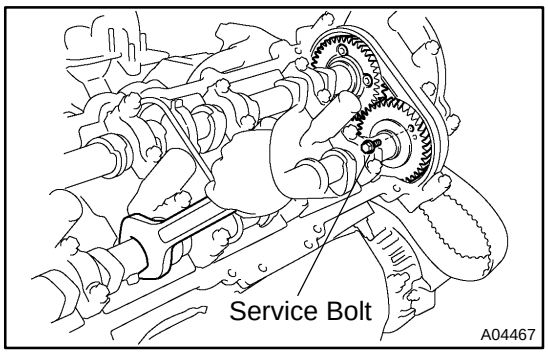

(a) Remove the RH camshafts.
(1) Boring the service bolt hole of the sub–gear upward by turning the hexagon wrench head portion of the exhaust camshaft with a wrench.
(2) Secure the sub–gear to the main gear with a service bolt.

Recommended service bolt:

Thread diameter	6 mm
Thread pitch	1.0 mm
Bolt length	16 – 20 mm

HINT:
When removing the camshafts, make sure that the torsional spring force of the sub–gear has been eliminated by the above operation.

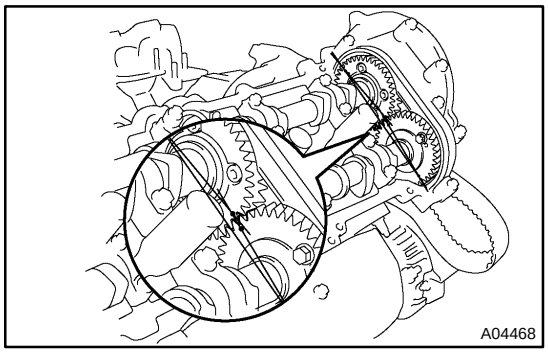

(3) Set the timing mark (1 dot mark) of the camshaft main gear at approx. 10° angle by turning the hexagon wrench head portion of the exhaust camshaft with a wrench.

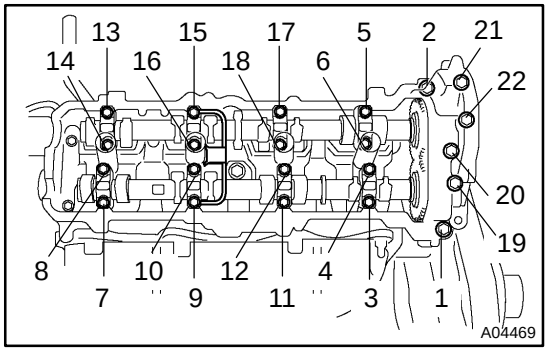

(4) Uniformly loosen and remove the 22 bearing cap bolts in several passes, in the sequence shown.
(5) Remove the oil feed pipe, 9 bearing caps and camshafts.

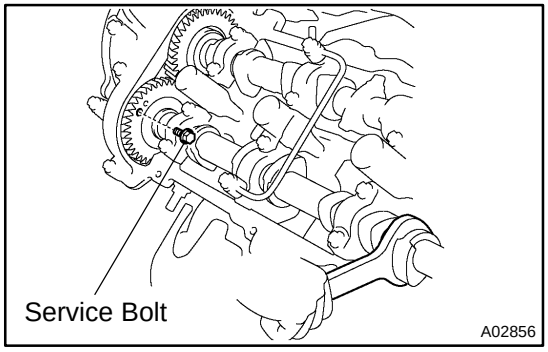

(b) Remove the LH camshafts.
(1) Boring the service bolt hole of the sub–gear upward by turning the hexagon wrench head portion of the exhaust camshaft with a wrench.

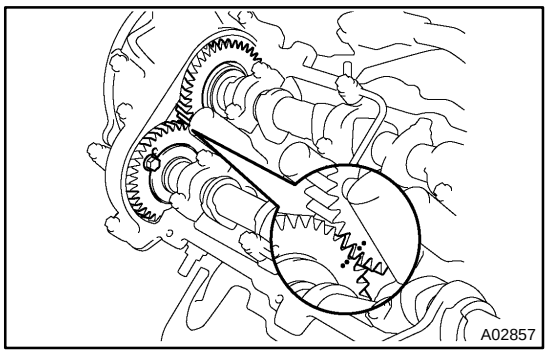

(2) Secure the sub–gear to the main gear with a service bolt.

Recommended service bolt:

Thread diameter	6 mm
Thread pitch	1.0 mm
Bolt length	16 – 20 mm

HINT:

When removing the camshaft, make sure that the torsional spring force of the sub–gear has been eliminated by the above operation.

(3) Align the timing mark (2 dot marks) of the camshaft drive gear by turning the hexagon wrench head portion of the exhaust camshaft with a wrench.

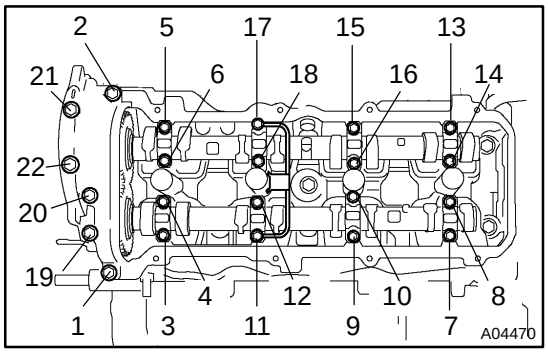

(4) Uniformly loosen and remove the 22 bearing cap bolts in several passes, in the sequence shown.

(5) Remove the oil feed pipe, 9 bearing caps and camshafts.

HINT:

Arrange the bearing caps in correct order.

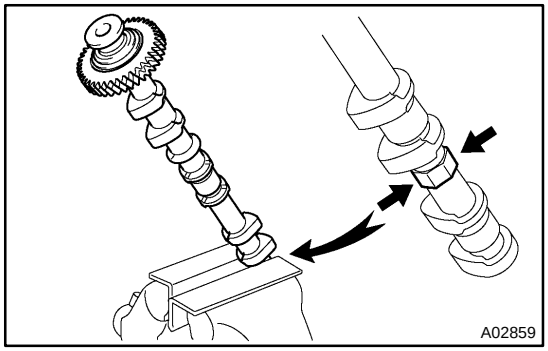

23. DISASSEMBLE EXHAUST CAMSHAFTS

(a) Mount the hexagon wrench head portion of the camshaft in a vise.

NOTICE:

Be careful not to damage the camshaft.

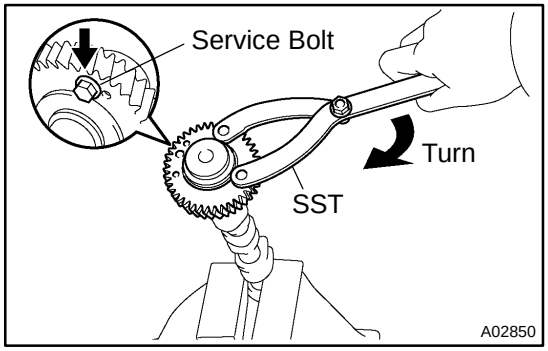

(b) Using SST, turn the sub–gear clockwise, and remove the service bolt.

SST 09960–10010 (09962–01000, 09963–00500)

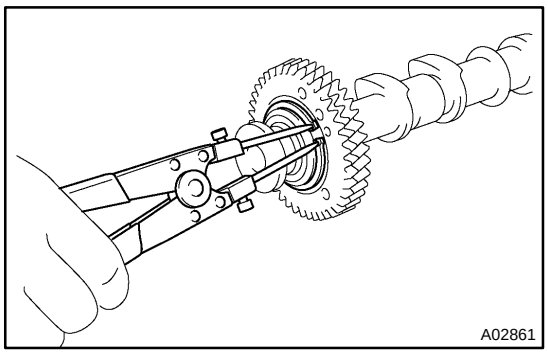

(c) Using snap ring pliers, remove the snap ring.
(d) Remove the wave washer.
(e) Remove the camshaft sub–gear.
(f) Remove the camshaft gear spring.

HINT:

Arrange the camshaft sub–gears and gear spring (RH and LH sides).

Be careful not to damage the camshaft timing tube.

24. REMOVE OIL SEAL FROM INTAKE CAMSHAFT

25. REMOVE SPARK PLUGS

26. REMOVE CYLINDER HEAD AND EXHAUST MANIFOLD ASSEMBLIES

(a) Uniformly loosen the 10 cylinder head bolts on one side of each cylinder head in several passes, in the sequence shown, then do the other side as shown. Remove the 20 cylinder head bolts and plate washers.

NOTICE:

▲ **Cylinder head warpage or cracking could result from removing bolts in incorrect order.**

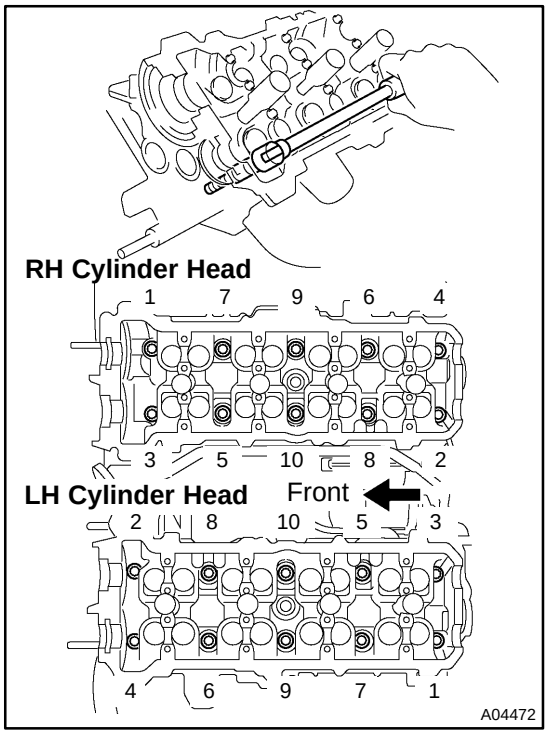

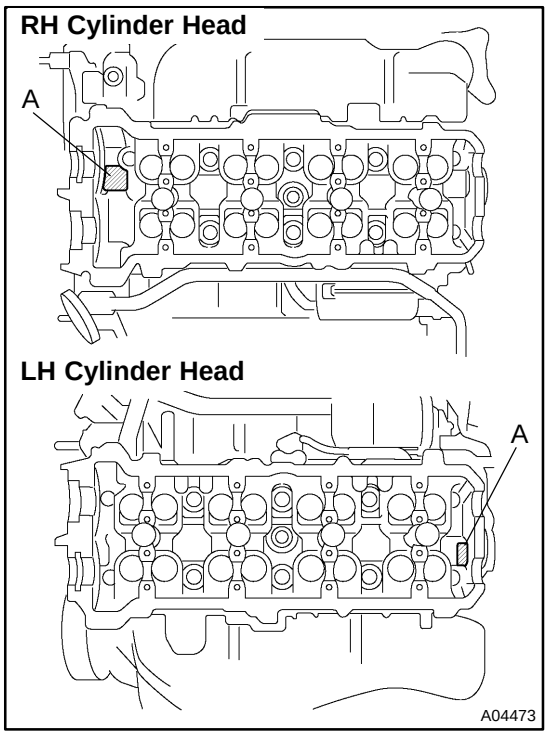

▲ **Do not drop the plate washer for cylinder head bolt into portion A of the cylinder head. If dropped into portion A, the plate washer will pass through the cylinder head and cylinder block into the oil pan.**

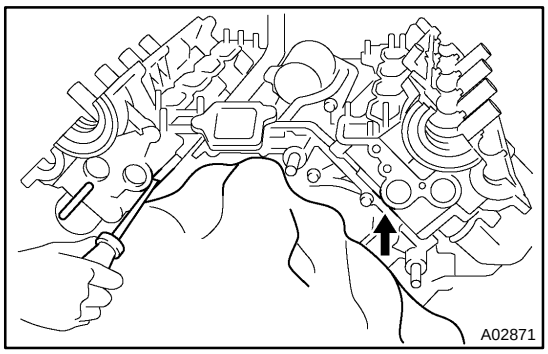

(b) Lift the cylinder head from the dowels on the cylinder block, and place the 2 cylinder heads on wooden blocks on a bench.

HINT:

If the cylinder head is lift off, pry between the cylinder head and cylinder block with a screwdriver.

NOTICE:

- **Be careful not to damage the surfaces contacting the cylinder head and cylinder block.**
- **The cylinder head should not be tilted so as to secure the valve lifter. If the cylinder head is tilted, remove the valve lifter and check that the adjusting shim is set correctly.**

27. REMOVE RH EXHAUST MANIFOLD FROM CYLINDER HEAD

(a) Remove the 4 bolts and heat insulator.

(b) Remove the 8 nuts, exhaust manifold and gasket.

28. REMOVE LH EXHAUST MANIFOLD FROM CYLINDER HEAD

(a) Remove the 4 bolts and heat insulator.

(b) Remove the 8 nuts, exhaust manifold and gasket.

EM0L1–05

DISASSEMBLY

1. REMOVE VALVE LIFTERS AND SHIMS

HINT:

Arrange the valve lifters and shims in correct order.

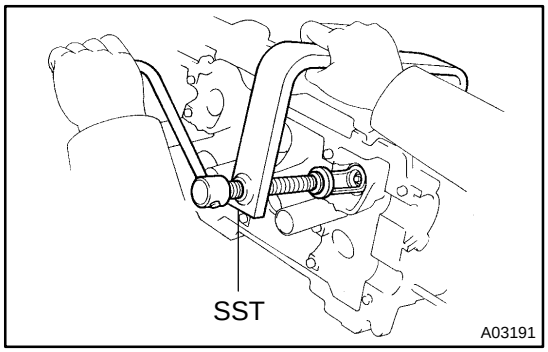

2. REMOVE VALVES

(a) Using SST, compress the valve spring and remove the 2 keepers.

SST 09202–70020 (09202–00010)

(b) Remove the spring retainer, the valve spring, the valve and the spring seat.

HINT:

Arrange the valves, valve springs, spring seats and spring retainers incorrect order.

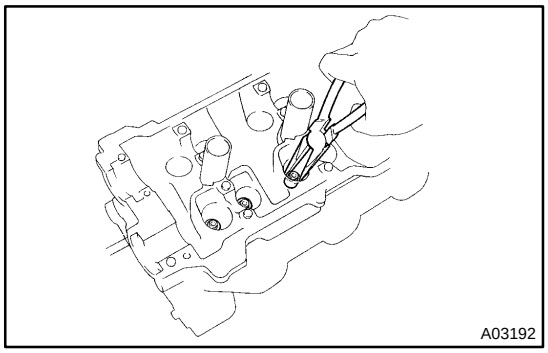

(c) Using needle–nose pliers, remove the oil seal.

EM0L2–04

INSPECTION

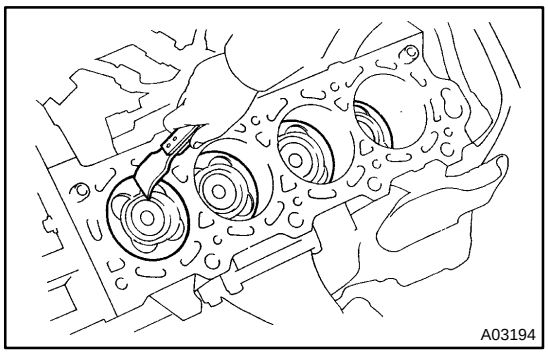

1. CLEAN TOP SURFACES OF PISTONS AND CYLINDER BLOCK

(a) Turn the crankshaft, and bring each piston to top dead center (TDC). Using a gasket scraper, remove all the carbon from the piston top surface.

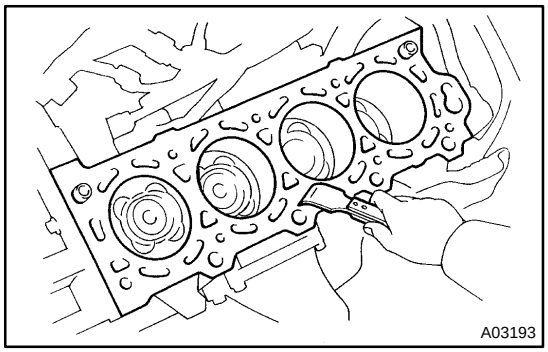

(b) Using a surface contacting gasket scraper, remove all the gasket materials from the cylinder block.

(c) Using compressed air, blow carbon and oil from the bolt holes.

CAUTION:
Protect your eyes when using high pressure compressed air.

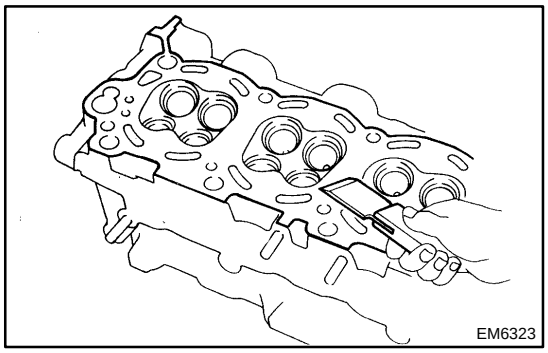

2. REMOVE GASKET MATERIAL

Using a gasket scraper, remove all the gasket material from the cylinder block contact surface.

NOTICE:
Be careful not to scratch the surface contacting the cylinder block.

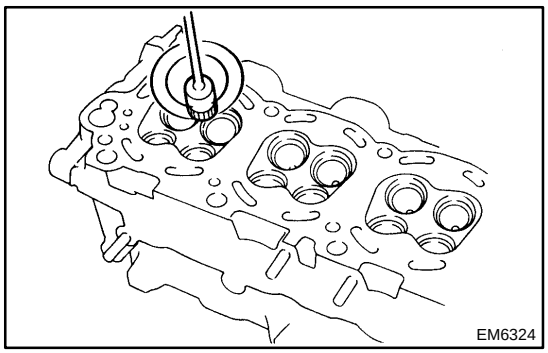

3. CLEAN COMBUSTION CHAMBERS

Using a wire brush, remove all the carbon from the combustion chambers.

NOTICE:
Be careful not to scratch the surface contacting the cylinder block.

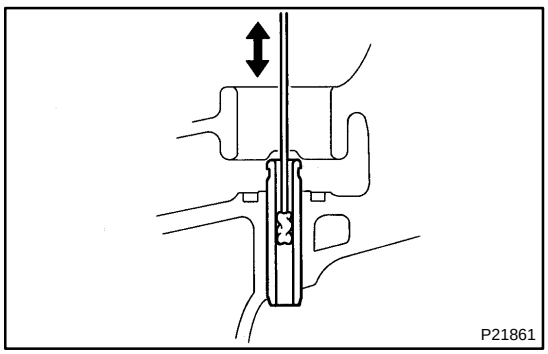

4. CLEAN VALVE GUIDE BUSHINGS

Using a valve guide bushing brush and solvent, clean all the guide bushings.

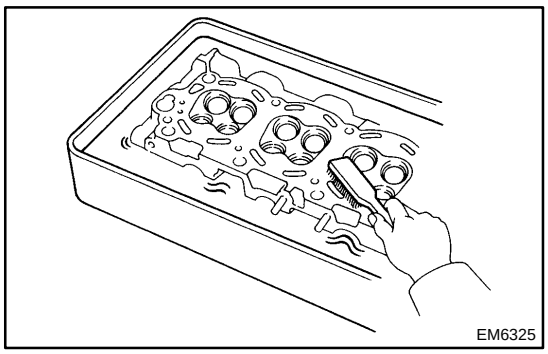

5. CLEAN CYLINDER HEAD

Using a soft brush and solvent, thoroughly clean the cylinder head.

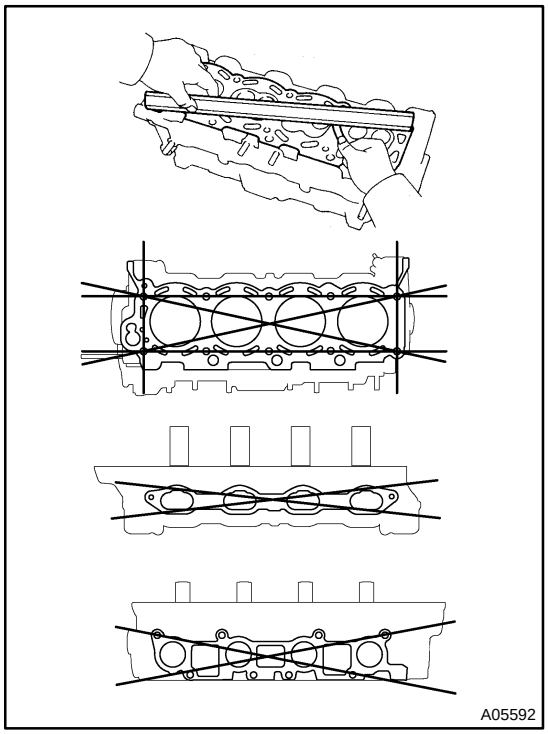

6. INSPECT FOR FLATNESS

Using a precision straight edge and feeler gauge, measure the surfaces contacting the cylinder block and the manifolds for warpage.

Maximum warpage: 0.10 mm (0.0039 in.)

If warpage is greater than maximum, replace the cylinder head.

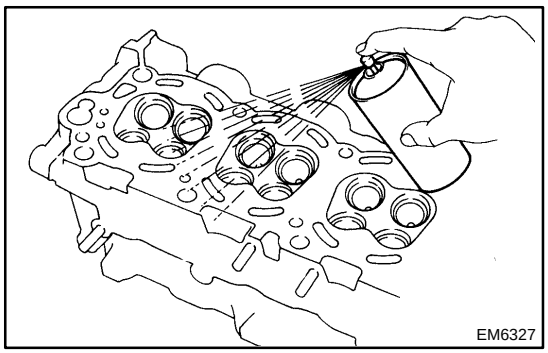

7. INSPECT FOR CRACKS

Using a dye penetrant, check the combustion chamber, intake ports, exhaust ports and cylinder block surface for cracks.

If cracked, replace the cylinder head.

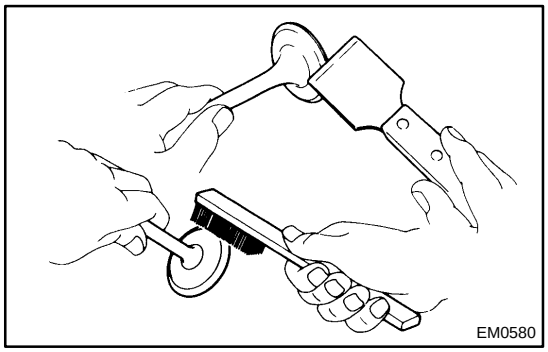

8. CLEAN VALVES

(a) Using a gasket scraper, chip off any carbon from the valve head.

(b) Using a wire brush, thoroughly clean the valve.

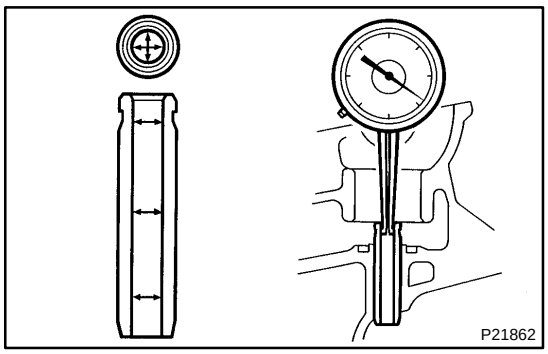

9. INSPECT VALVE STEMS AND GUIDE BUSHINGS

(a) Using a caliper gauge, measure the inside diameter of the guide bushing.

Bushing inside diameter:
5.510 – 5.530 mm (0.2169 – 0.2177 in.)

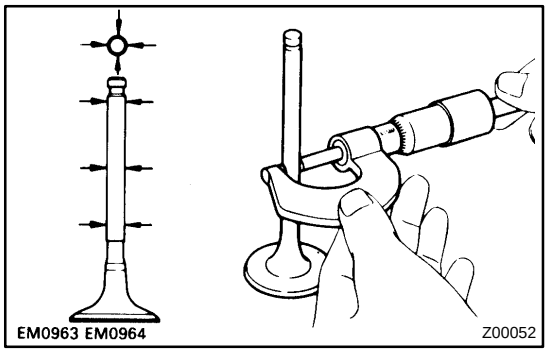

(b) Using a micrometer, measure the diameter of the valve stem.

Valve stem diameter:

Intake	5.470 – 5.485 mm (0.2154 – 0.2159 in.)
Exhaust	5.465 – 5.480 mm (0.2152 – 0.2157 in.)

(c) Subtract the valve stem diameter measurement from the guide bushing inside diameter measurement.

Standard oil clearance:

Intake	0.025 – 0.060 mm (0.0010 – 0.0024 in.)
Exhaust	0.030 – 0.065 mm (0.0012 – 0.0026 in.)

Maximum oil clearance:

Intake	0.08 mm (0.0031 in.)
Exhaust	0.10 mm (0.0039 in.)

If the clearance is greater than maximum, replace the valve and guide bushing (See page EM–52).

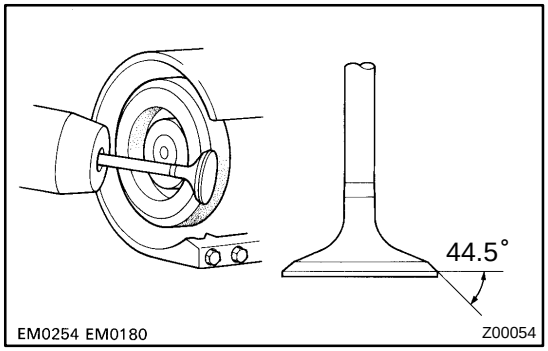

10. INSPECT AND GRIND VALVES

(a) Grind the valve enough to remove pits and carbon.

(b) Check that the valve is ground to the correct valve face angle.

Valve face angle: 44.5°

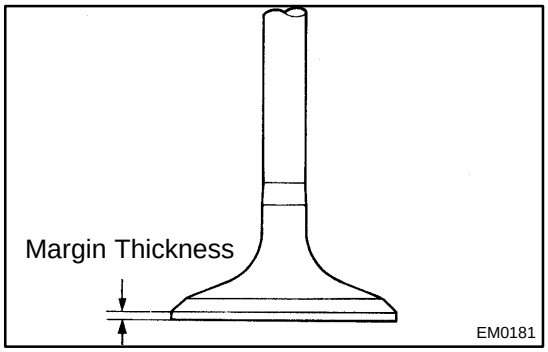

(c) Check the valve head margin thickness.

Standard margin thickness: 1.00 mm (0.039 in.)
Minimum margin thickness: 0.5 mm (0.020 in.)

If the margin thickness is less than minimum, replace the valve.

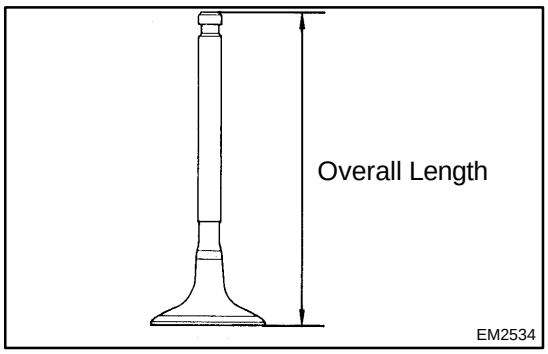

(d) Check the valve overall length.

Standard overall length:

Intake	95.05 mm (3.7421 in.)
Exhaust	95.10 mm (3.7441 in.)

Minimum overall length:

Intake	94.55 mm (3.7224 in.)
Exhaust	94.60 mm (3.7244 in.)

If the overall length is less than minimum, replace the valve.

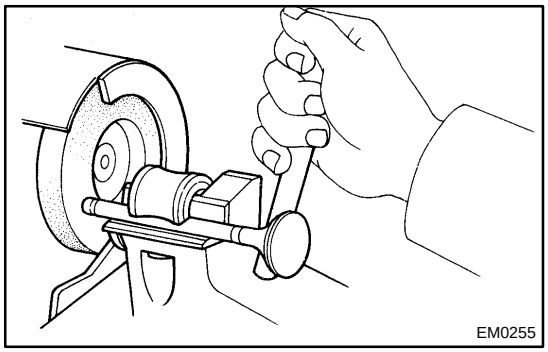

(e) Check the surface of the valve stem tip for wear.

If the valve stem tip is worn, resurface the tip with a grinder or replace the valve.

NOTICE:

Do not grind off more than minimum.

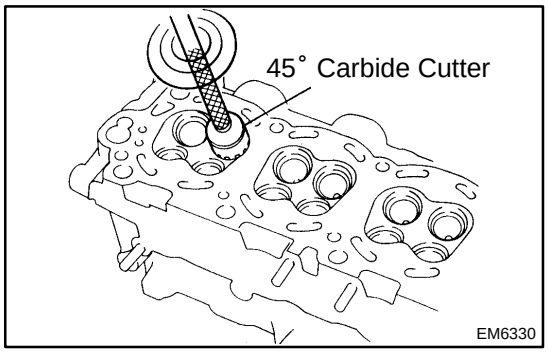

11. INSPECT AND CLEAN VALVE SEATS

(a) Using a 45˚ carbide cutter, resurface the valve seats. Remove only metal enough to clean the seats.

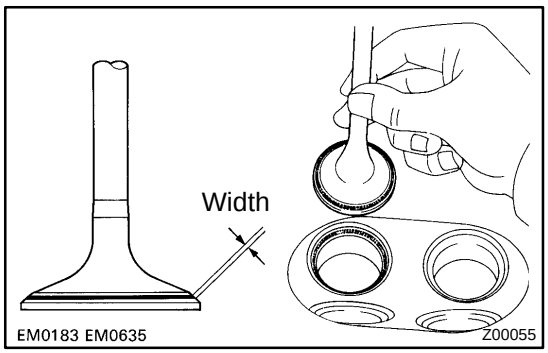

(b) Check the valve seating position.

Apply a light coat of prussian blue (or white lead) to the valve face. Lightly press the valve against the seat. Do not rotate the valve.

(c) Check the valve face and seat for the following:

- ▲ If blue appears 360˚ around the face, the valve is concentric. If not, replace the valve.
- ▲ If blue appears 360˚ around the valve seat, the guide and face are concentric. If not, resurface the seat.
- ▲ Check that the seat contact is in the middle of the valve face with the following width:

1.0 – 1.4 mm (0.039 – 0.055 in.)

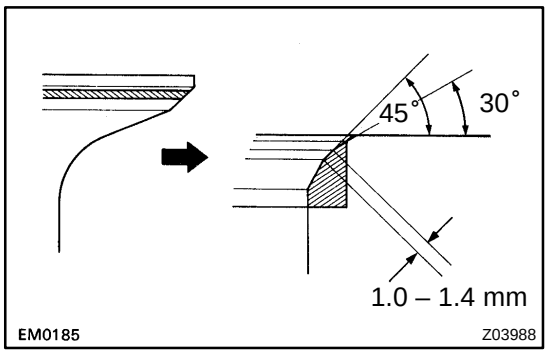

If not, correct the valve seats as follows:

(1) If the seating is too high on the valve face, use 30° and 45° cutters to correct the seat.

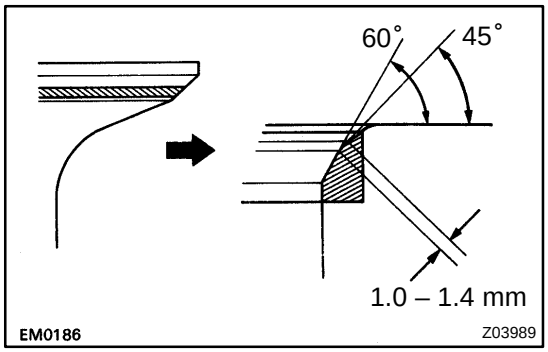

(2) If the seating is too low on the valve face, use 60° and 45° cutters to correct the seat.

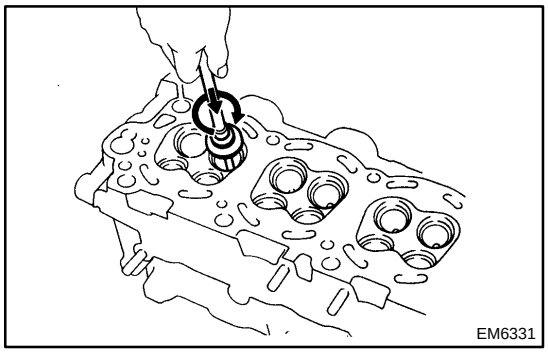

(d) Hand–lap the valve and valve seat with an abrasive compound.

(e) After hand–lapping, clean the valve and valve seat.

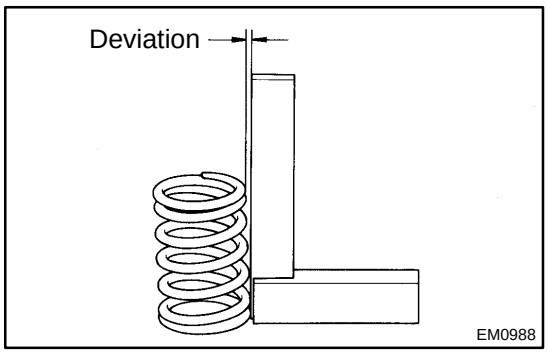

12. INSPECT VALVE SPRINGS

(a) Using a steel square, measure the deviation of the valve spring.

Maximum deviation: 2.0 mm (0.079 in.)

If the deviation is greater than maximum, replace the valve spring.

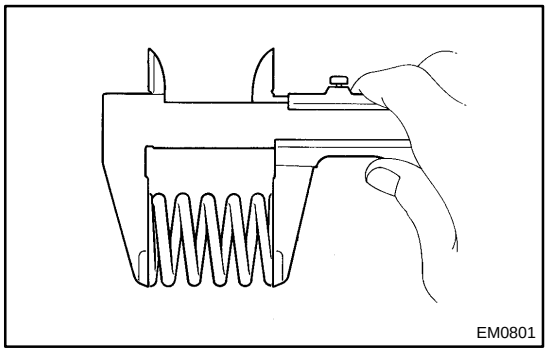

(b) Using vernier calipers, measure the free length of the valve spring.

Free length: 54.1 mm (2.130 in.)

If the free length is not as specified, replace the valve spring.

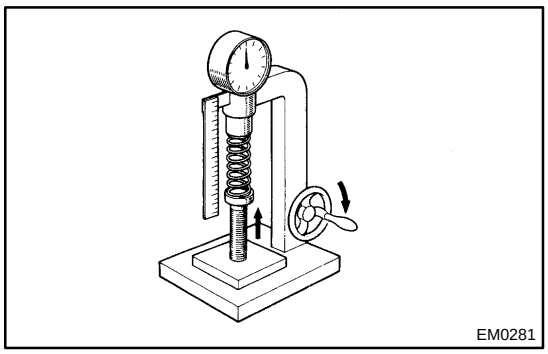
EM0281

(c) Using a spring tester, measure the tension of the valve spring at the specified installed length.

Installed tension:
204 – 226 N (20.8 – 23.0 kgf, 45.9 – 50.7 lbf)
at 35.0 mm (1.378 in.)

If the installed tension is not as specified, replace the valve spring.

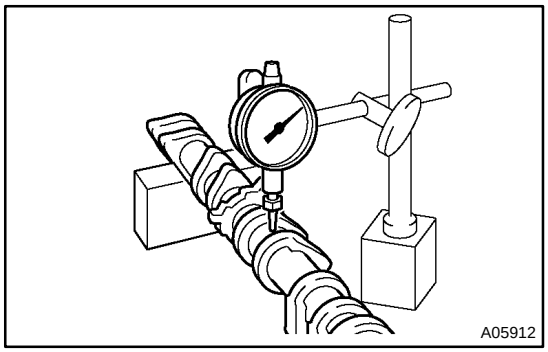
A05912

13. INSPECT CAMSHAFT FOR RUNOUT

(a) Place the camshaft on V–blocks.

(b) Using a dial indicator, measure the circle runout at the center journal.

Maximum circle runout: 0.08 mm (0.0031 in.)

If the circle runout is greater than maximum, replace the camshaft.

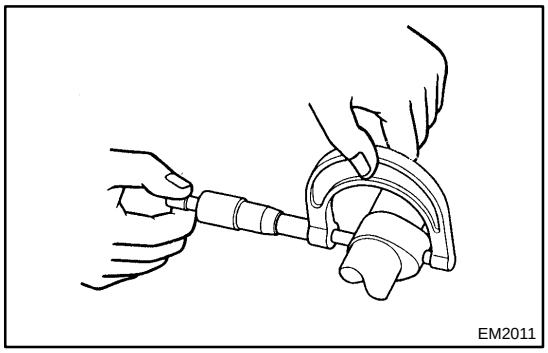
EM2011

14. INSPECT CAM LOBES

Using a micrometer, measure the cam lobe height.

Standard cam lobe height:

Intake	41.94 – 42.04 mm (1.6512 – 1.6551 in.)
Exhaust	41.96 – 42.06 mm (1.6520 – 1.6559 in.)

Minimum cam lobe height:

Intake	41.79 mm (1.6453 in.)
Exhaust	41.81 mm (1.6461 in.)

If the cam lobe height is less than minimum, replace the camshaft.

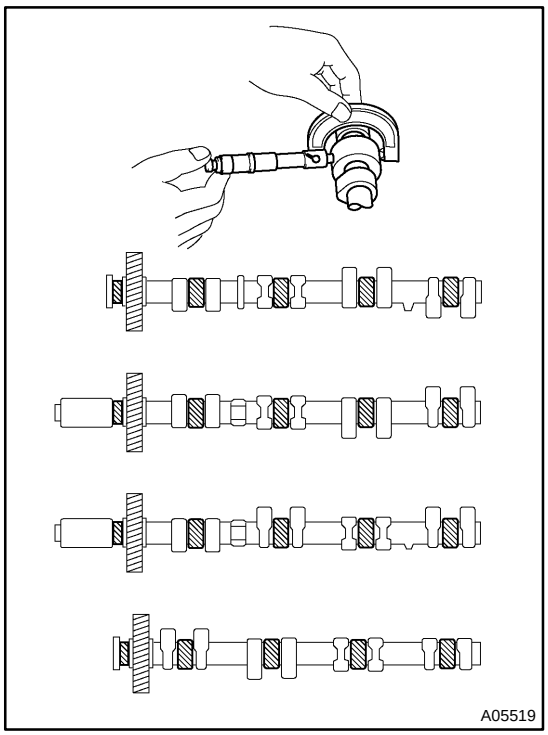

15. INSPECT CAMSHAFT JOURNALS

Using a micrometer, measure the journal diameter.

Journal diameter:

26.954 – 26.970 mm (1.0612 – 1.0618 in.)

If the journal diameter is not as specified, check the oil clearance.

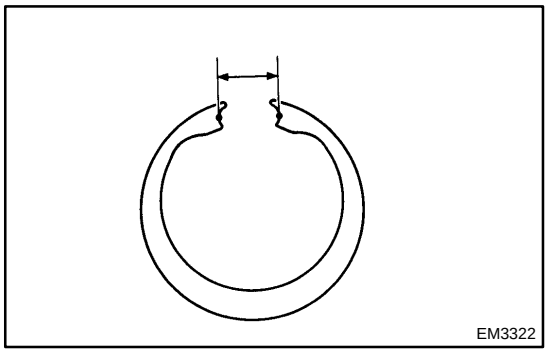

16. INSPECT CAMSHAFT GEAR SPRING

Using vernier calipers, measure the free distance between the spring ends.

Free distance: 18.2 – 18.8 mm (0.712 – 0.740 in.)

If the free distance is not as specified, replace the gear spring.

17. INSPECT CAMSHAFT BEARINGS

Check that bearings for flaking and scoring.

If the bearings are damaged, replace the bearing caps and cylinder head as a set.

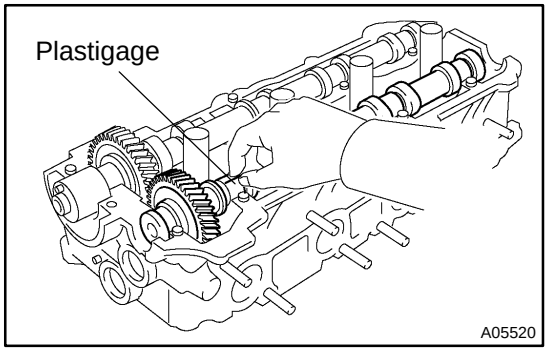

18. INSPECT CAMSHAFT JOURNAL OIL CLEARANCE

(a) Clean the bearing caps and camshaft journals.

(b) Place the camshafts on the cylinder head.

(c) Lay a strip of Plastigage across each of the camshaft journals.

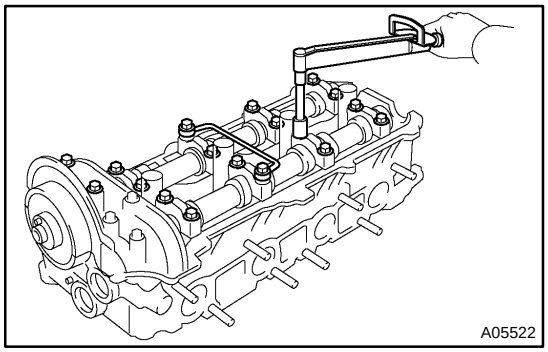

(d) Install the bearing caps (See page EM–56).

NOTICE:

Do not turn the camshaft.

(e) Remove the bearing caps.

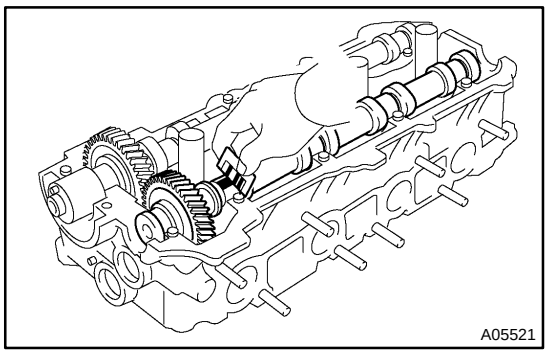
A05521

(f) Measure the Plastigage at its widest point.

Maximum oil clearance: 0.10 mm (0.0039 in.)

If the oil clearance is greater than maximum, replace the camshaft. If necessary, replace the bearing caps and cylinder head as a set.

(g) Completely remove the plastigage.

(h) Remove the camshafts.

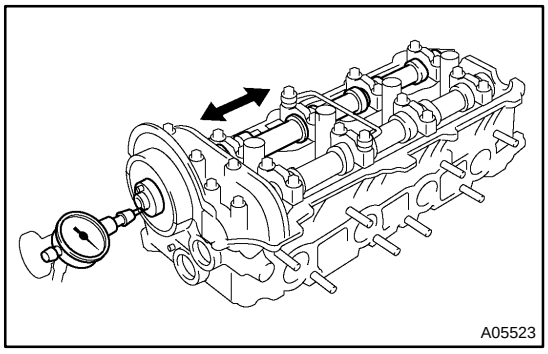
A05523

19. INSPECT CAMSHAFT THRUST CLEARANCE

(a) Install the camshaft (See page EM–56).

(b) Using a dial indicator, measure the thrust clearance while moving the camshaft back and forth.

Standard thrust clearance:

Intake	0.040 – 0.085 mm (0.0016 – 0.0033 in.)
Exhaust	0.030 – 0.075 mm (0.0011 – 0.0030 in.)

Maximum thrust clearance: 0.12 mm (0.0047 in.)

If the thrust clearance is greater than maximum, replace the camshaft. If necessary, replace the bearing caps and cylinder head as a set.

(c) Remove the camshafts.

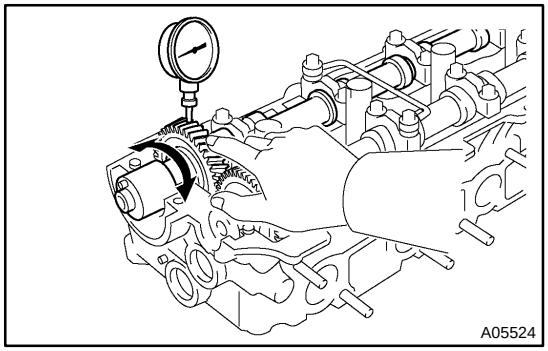
A05524

20. INSPECT CAMSHAFT GEAR BACKLASH

(a) Install the camshafts without installing the exhaust cam sub–gear and front bearing cap (See page EM–56).

(b) Using a dial indicator, measure the backlash.

Standard backlash:

0.020 – 0.200 mm (0.0008 – 0.0079 in.)

Maximum backlash: 0.30 mm (0.0188 in.)

If the backlash is greater than maximum, replace the camshafts.

(c) Remove the camshafts.

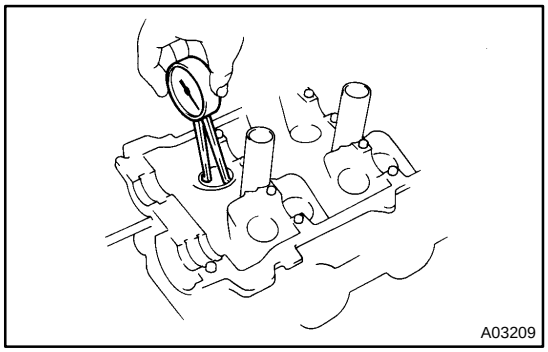
A03209

21. INSPECT VALVE LIFTERS AND LIFTER BORES

(a) Using a caliper gauge, measure the lifter bore diameter of the cylinder head.

Lifter bore diameter:

31.000 – 31.016 mm (1.2205 – 1.2211 in.)

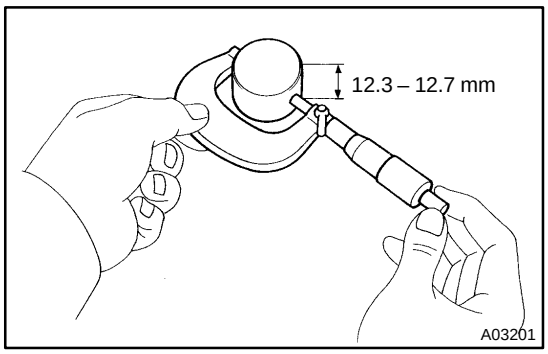

(b) Using a micrometer, measure the lifter diameter at the valve lifter center line, 12.3 – 12.7 mm (0.484 – 0.500 in.) from the valve lifter head.
Lifter diameter:
30.966 – 30.976 mm (1.2191 – 1.2195 in.)

(c) Subtract the lifter diameter measurement from the lifter bore diameter measurement.
Standard oil clearance:
0.024 – 0.050 mm (0.0009 – 0.0020 in.)
Maximum oil clearance: 0.07 mm (0.0028 in.)

If the oil clearance is greater than maximum, replace the lifter. If necessary, replace the cylinder head.

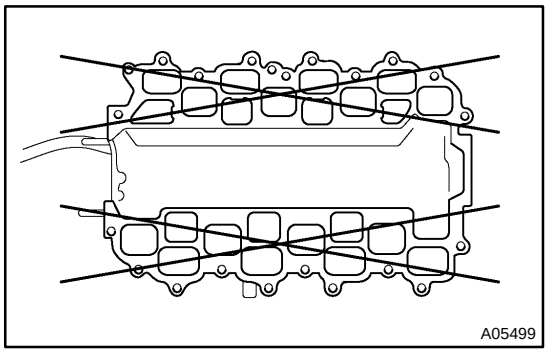

22. INSPECT INTAKE MANIFOLD

(a) Upper Intake Manifold:
Using a precision straight edge and feeler gauge, measure the surface contacting the lower intake manifold for warpage.
Maximum warpage: 0.15 mm (0.0059 in.)

If warpage is greater than maximum, replace the upper intake manifold.

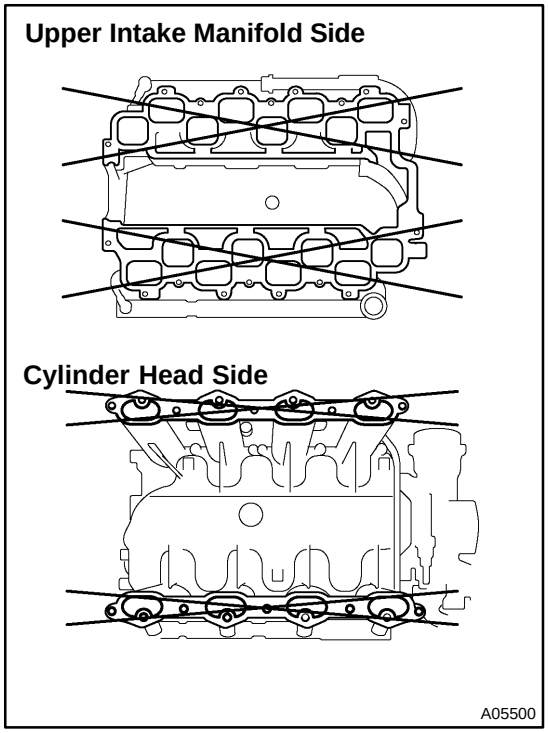

(b) Lower Intake Manifold:
Using a precision straight edge and feeler gauge, measure the surface contacting the cylinder head and upper intake manifold for warpage.
Maximum warpage: 0.15 mm (0.0059 in.)

If warpage is greater than maximum, replace the lower intake manifold.

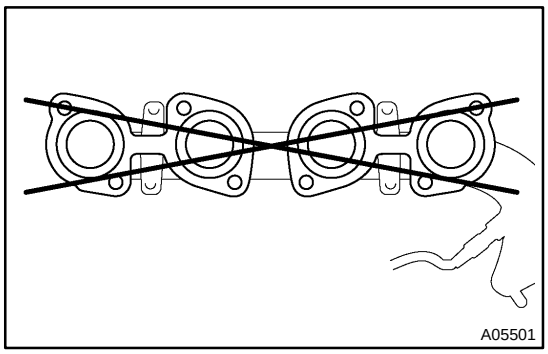

23. INSPECT EXHAUST MANIFOLDS

Using a precision straight edge and feeler gauge, measure the surface contacting the cylinder head for warpage.

Maximum warpage: 0.50 mm (0.0197 in.)

If warpage is greater than maximum, replace the manifold.

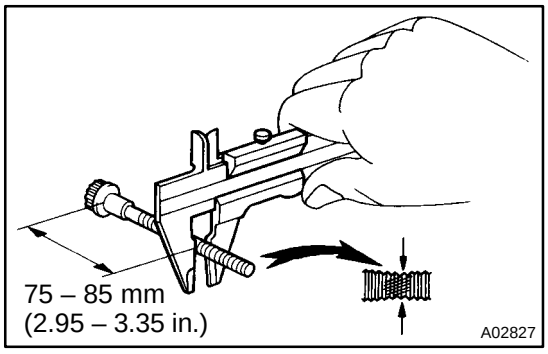

24. INSPECT CYLINDER HEAD BOLTS

Using vernier calipers, measure the thread outside diameter of the bolt.

Standard outside diameter:
9.810 – 9.960 mm (0.3862 – 0.3921 in.)

Minimum outside diameter: 9.700 mm (0.3819 in.)

If the diameter is less than minimum, replace the bolt.

EM0L3–04

REPLACEMENT

1. REPLACE VALVE GUIDE BUSHINGS

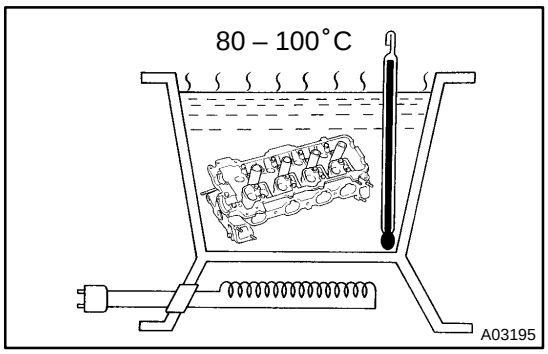

(a) Gradually heat the cylinder head to 80 – 100˚C (176 – 212˚F).

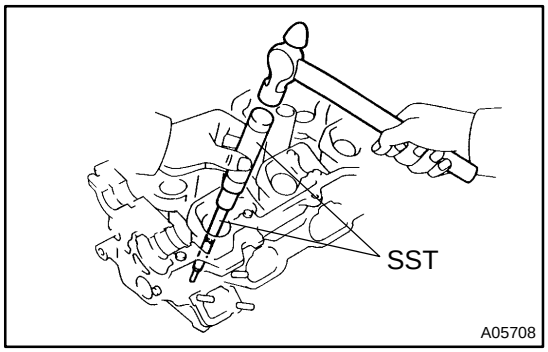

(b) Using SST and a hammer, tap out the guide bushing.
SST 09201–10055, 09950–70010 (09951–07100)

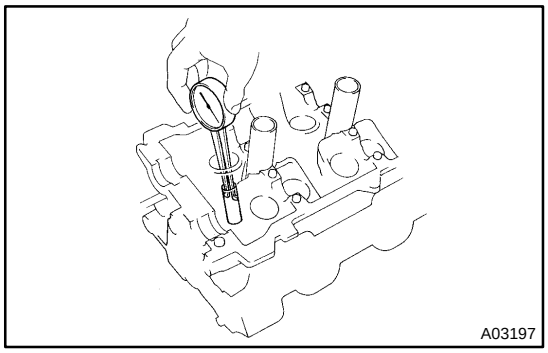

(c) Using a caliper gauge, measure the bushing bore diameter of the cylinder head.

Both intake and exhaust

Bushing bore diameter mm (in.)	Bushing size
10.285 – 10.306 (0.4049 – 0.4057)	Use STD
10.335 – 10.356 (0.4069 – 0.4077)	Use O/S STD

(d) Select a new guide bushing (STD or O/S 0.05).

If the bushing bore diameter of the cylinder head is greater than 10.306 mm (0.4057 in.), machine the bushing bore to the following dimension:

10.335 – 10.356 mm (0.4069 – 0.4077 in.)

If the bushing bore diameter of the cylinder head is greater than 10.356 mm (0.4077 in.), replace the cylinder head.

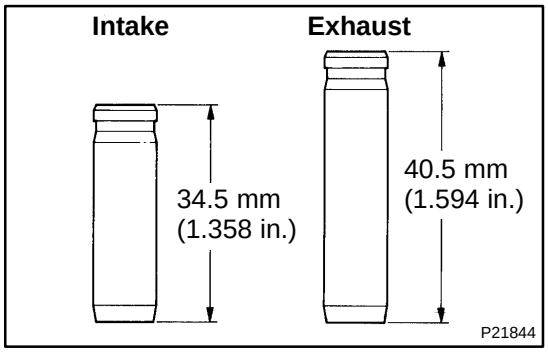

HINT:

Different the bushings are used for the intake and exhaust.

(e) Gradually heat the cylinder head to 80 – 100˚C (176 – 212˚F).

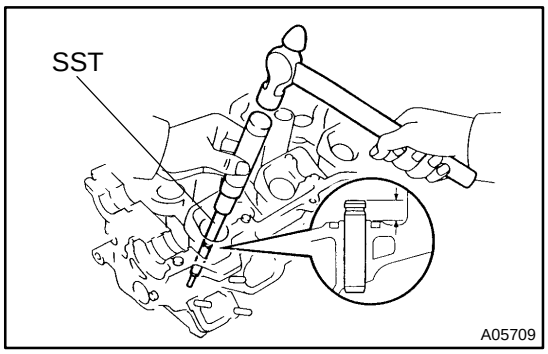

(f) Using SST and a hammer, tap in a new guide bushing to the specified protrusion height.

Protrusion height:

Intake	9.2 – 9.8 mm (0.362 – 0.386 in.)
Exhaust	8.2 – 8.8 mm (0.323 – 0.346 in.)

SST 09201–10055, 09950–70010 (09951–07100)

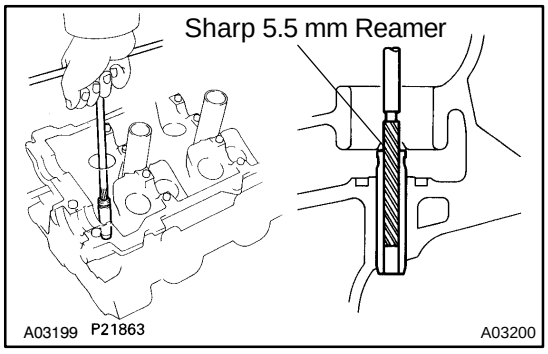

(g) Using a sharp 5.5 mm reamer, ream the guide bushing to obtain the standard specified clearance (See page EM–42) between the guide bushing and valve stem.

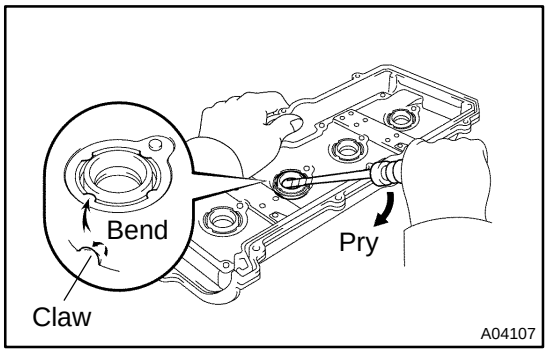

2. REPLACE SPARK PLUG TUBE GASKETS

(a) Bend the 4 ventilation case claws installed on the cylinder head cover to an angle of 90° or more.

(b) Using a screwdriver, pry out the gasket.

NOTICE:

Be careful not to damage the cylinder head cover. Tape the screwdriver tip.

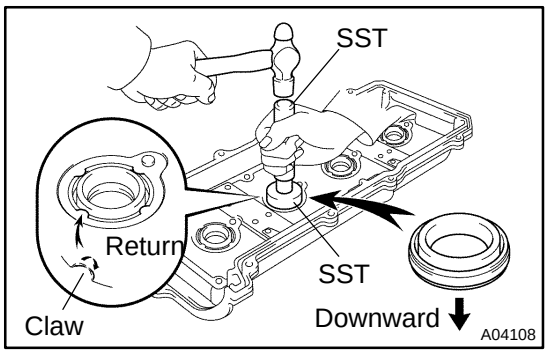

(c) Using SST and a hammer, tap in a new gasket until its surface is flush with the upper edge of the cylinder head cover.

SST 09950–60010 (09551–00240, 09951–00440, 09952–06010), 09950–70010 (09951–07100)

NOTICE:

Be careful of the installation direction.

(d) Apply a light coat of MP grease to the gasket lip.

(e) Return the 4 ventilation case claws to its original position.

EM0L4–05

REASSEMBLY

HINT:

- ▲ Thoroughly clean all parts to be assembled.
- ▲ Before installing the parts, apply fresh engine oil to all sliding and rotating surfaces.
- ▲ Replace all gaskets and oil seals with new ones.

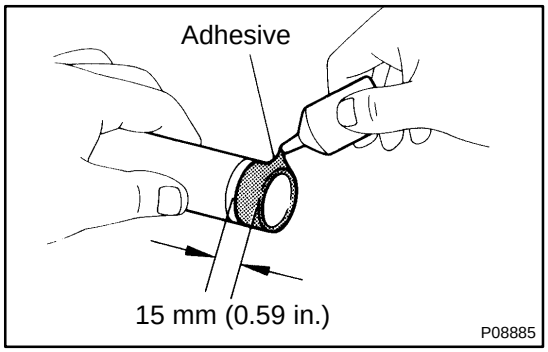

1. INSTALL SPARK PLUG TUBES

HINT:

When using a new cylinder head, spark plug tubes must be installed.

(a) Apply adhesive to the end of the spark plug tube.
Adhesive:
Part No. 08833–00070, THREE BOND 1324 or equivalent

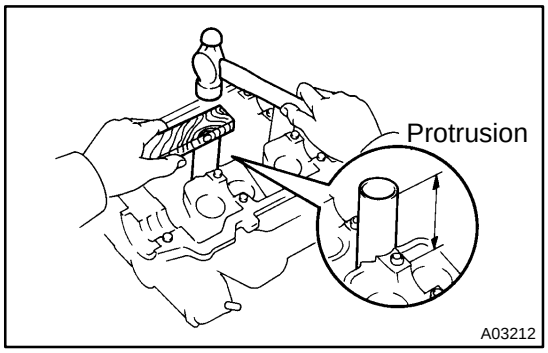

(b) Using a wooden block and hammer, tap in a new spark tube until there is 40.9 – 42.1 mm (1.610 – 1.658 in.) protruding from the camshaft bearing cap installation surface of the cylinder head.

NOTICE:
Avoid tapping a new spark plug tube too far for measuring the amount of the protrusion while tapping.

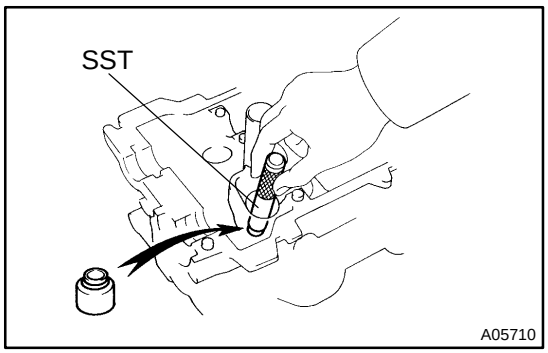

2. INSTALL VALVES

(a) Using SST, push in a new oil seal.
SST 09201–41020

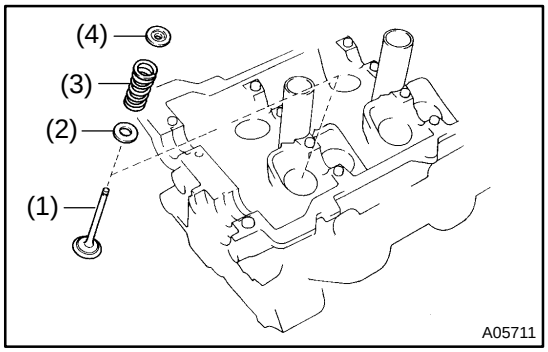

(b) Install the valve (1), spring seat (2), valve spring (3) and spring retainer (4).

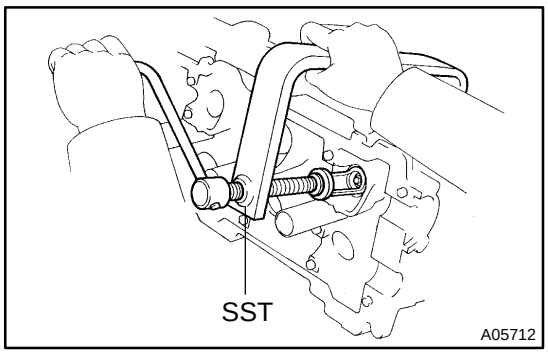

(c) Using SST, compress the valve spring and place the 2 keepers around the valve stem.
SST 09202–70020 (09202–00010)

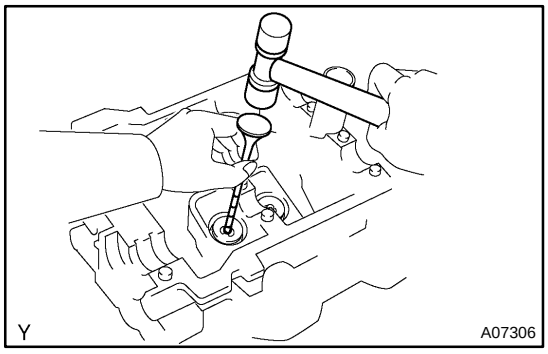

(d) Using a plastic–faced hammer and the valve stem (not in use) tip wound with vinyl tape, lightly tap the valve stem tip to assure proper fit.

NOTICE:

Be careful not to damage the valve stem tip.

3. INSTALL SHIMS AND VALVE LIFTERS

(a) Install the shim and valve lifter.

(b) Check that the valve lifter rotates smoothly by hand.

EM1V5–01

INSTALLATION

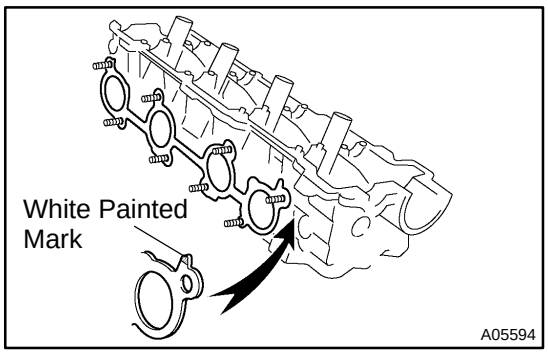

1. INSTALL RH EXHAUST MANIFOLD TO CYLINDER HEAD

(a) Place a new gasket on the cylinder head with the white painted marks facing the manifold side.

NOTICE:

Be careful of the installation direction.

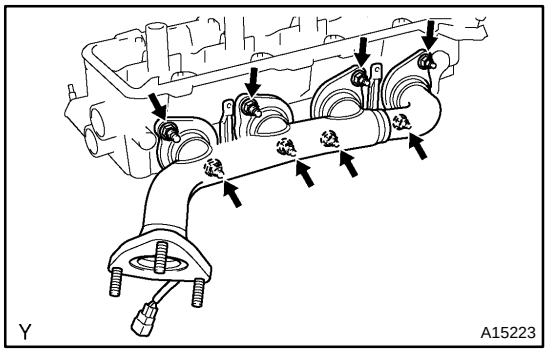

(b) Install the exhaust manifold with 8 new nuts. Uniformly tighten the nuts in several passes.
Torque: 44 N·m (450 kgf·cm, 32 ft·lbf)

(c) Install the heat insulator with the 4 bolts.
Torque: 7.5 N·m (80 kgf·cm, 66 in.·lbf)

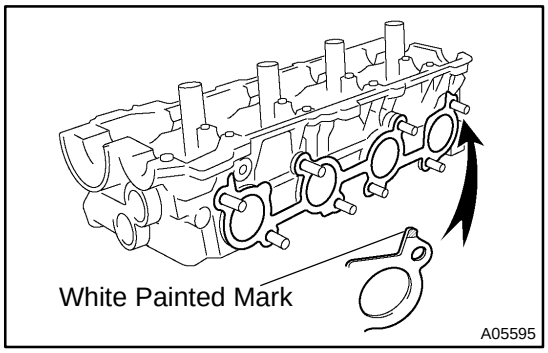

2. INSTALL LH EXHAUST MANIFOLD TO CYLINDER HEAD

(a) Place a new gasket on the cylinder head with the white painted marks facing the manifold side.

NOTICE:

Be careful of the installation direction.

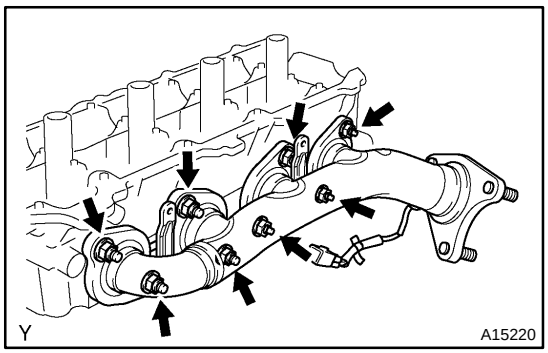

(b) Install the exhaust manifold with 8 new nuts. Uniformly tighten the nuts in several passes.
Torque: 44 N·m (450 kgf·cm, 32 ft·lbf)

(c) Install the heat insulator with the 4 bolts.
Torque: 7.5 N·m (80 kgf·cm, 66 in.·lbf)

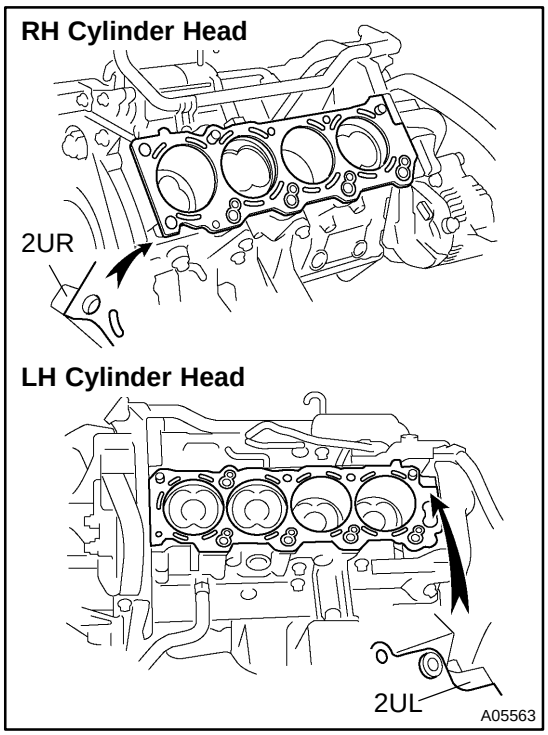

3. PLACE CYLINDER HEADS ON CYLINDER BLOCK

(a) Place 2 new cylinder head gaskets in position on the cylinder block.

HINT:

On the rear side of the cylinder head gasket are marks to distinguish the LH and RH banks, a ”2UR” mark for the RH bank and a ”2UL” mark for the LH bank.

NOTICE:

Be careful of the installation direction.

(b) Place the 2 cylinder heads in position on the cylinder head gaskets.

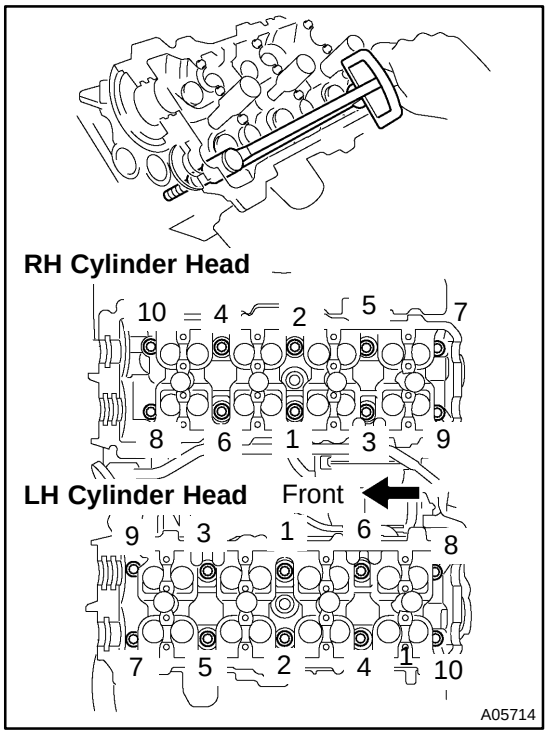

4. INSTALL CYLINDER HEAD BOLTS

HINT:

- ▲ The cylinder head bolts are tightened in 2 progressive steps (steps (c) and (e)).
- ▲ If any cylinder head bolt is broken or deformed, replace it.

(a) Apply a light coat of engine oil on the threads and under the heads of the cylinder head bolts.

(b) Install the plate washer to the cylinder head bolt.

(c) Install and uniformly tighten the 10 cylinder head bolts on one side of the cylinder head in several passes in the sequence shown, then do the other side as shown.

Torque: 32 N·m (325 kgf·cm, 24 ft·lbf)

If any of the cylinder head bolts does not meet the torque specification, replace the cylinder head bolt.

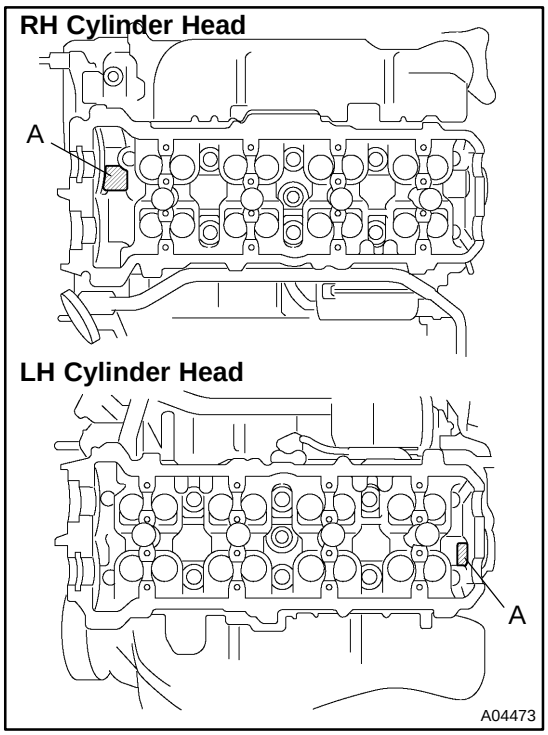

NOTICE:
Do not drop the plate washer for cylinder head bolt into portion A of the cylinder head. If dropped into portion A, the plate washer will pass through the cylinder head and cylinder block into the oil pan.

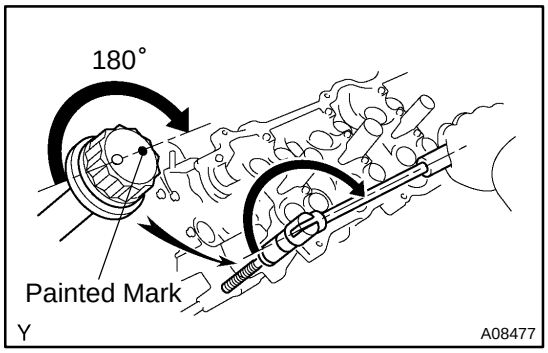

(d) Mark the front of the cylinder head bolt with paint.
(e) Retighten the cylinder head bolts by 180° in the numerical order shown.
(f) Check that the painted mark is now at a 180° angle to front.

5. INSTALL SPARK PLUGS

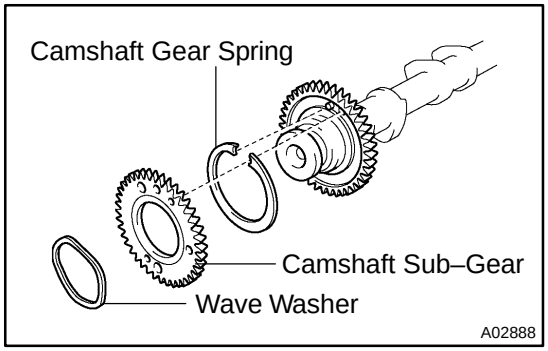

6. ASSEMBLE EXHAUST CAMSHAFT

(a) Install the camshaft gear spring, camshaft sub–gear and wave washer.

HINT:
Attach the pins on the gears to the gear spring ends.

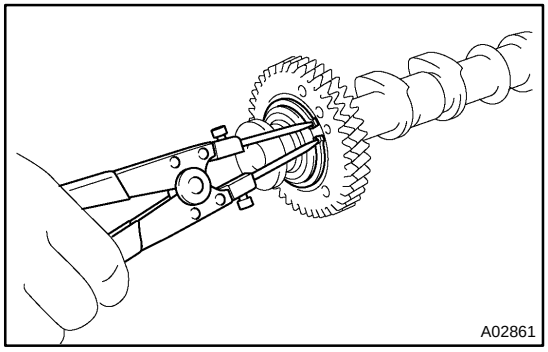

(b) Using snap ring pliers, install the snap ring.

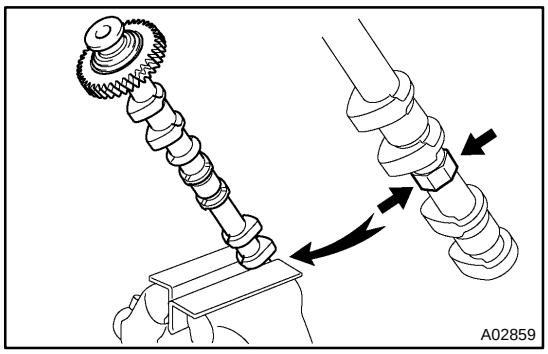

(c) Mount the hexagon wrench head portion of the camshaft in a vise.

NOTICE:
Be careful not to damage the camshaft.

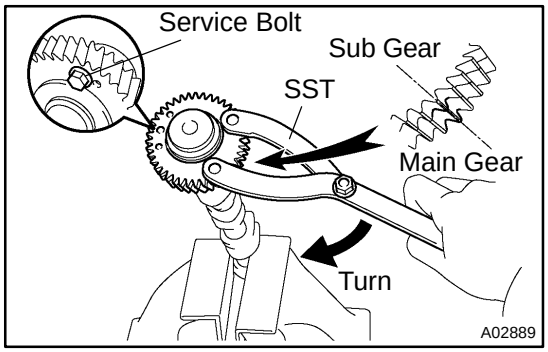

(d) Using SST, align the holes of the camshaft main gear and sub–gear by turning camshaft sub–gear counterclockwise, and temporarily install a service bolt.
SST 09960–10010 (09962–01000, 09963–00500)

(e) Align the gear teeth of the main gear and sub–gear, and tighten the service bolt.

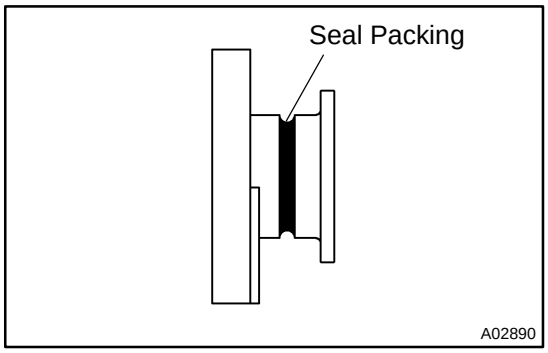

7. INSTALL CAMSHAFT HOUSING PLUGS

(a) Remove any old packing (FIPG) material.

(b) Apply seal packing to the camshaft housing plug grooves.
Seal packing: Part No. 08826–00080 or equivalent

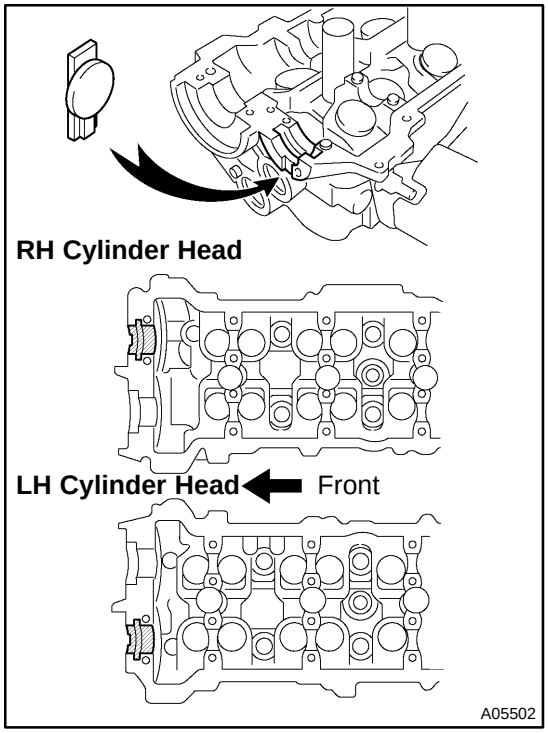

(c) Install the 2 camshaft housing plugs to the cylinder heads.

8. INSTALL CAMSHAFTS

NOTICE:

Since the thrust clearance of the camshaft is small, the camshaft must be kept level while it is being installed. If the camshaft is not kept level, the portion of the cylinder head receiving the shaft thrust may crack or be damaged, causing the camshaft to seize or break. To avoid this, the following steps should be carried out.

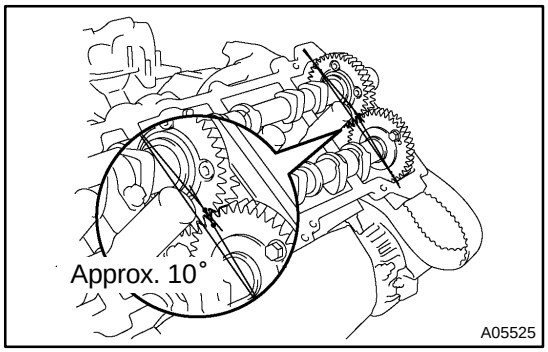

(a) Install the RH camshafts.
  (1) Apply MP grease to the thrust portion of the intake and exhaust camshafts.
  (2) Place the intake and exhaust camshafts.
  (3) Set the timing mark (1 dot mark) of the camshaft main gear at approx. 10° angle.

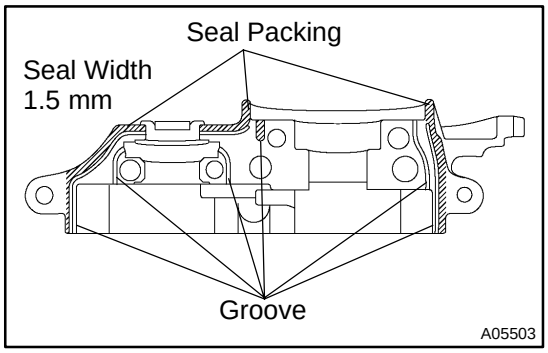

  (4) Remove any old packing (FIPG) material from front bearing cap.
  (5) Apply seal packing to the front bearing cap as shown in the illustration.

Seal packing: Part No. 08826–00080 or equivalent

- ▲ Install a nozzle that has been cut to a 1.5 mm (0.06 in.) opening.
- ▲ Parts must be assembled within 5 minutes of application. Otherwise the material must be removed and reapplied.
- ▲ Immediately remove nozzle from the tube and reinstall cap.

NOTICE:

Do not apply seal packing to the front bearing cap grooves.

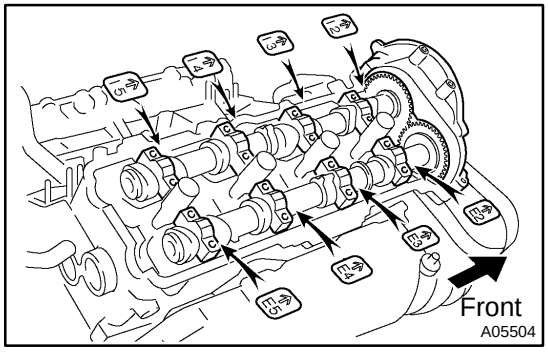

  (6) Install the front bearing cap.

HINT:

Installing the front bearing cap will determine the thrust portion of the camshaft.

  (7) Install the other bearing cap in the sequence shown with the arrow mark facing forward.

HINT:

Align the arrow marks at the front and rear of the cylinder head with the mark on the bearing cap.

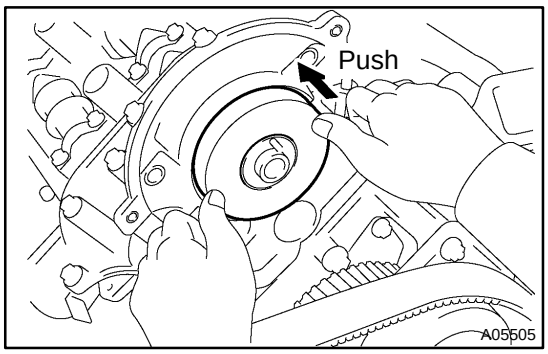

(8) Push in the camshaft oil seal.

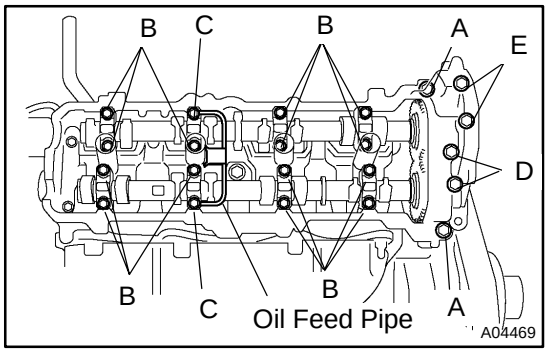

(9) Apply a light coat of engine oil on the threads and under the heads (D and E) of the bearing cap bolts.

HINT:

Do not apply engine oil under the heads of the bearing cap bolt (A), (B) and (C).

(10) Install the oil feed pipe the 22 bearing cap bolts as shown.

HINT:

Each bolt length is indicated in the illustration.

Bolt length:

25 mm (0.98 in.) for A
38 mm (1.50 in.) for B
52 mm (2.05 in.) for C
72 mm (2.83 in.) for D
94 mm (3.70 in.) for E

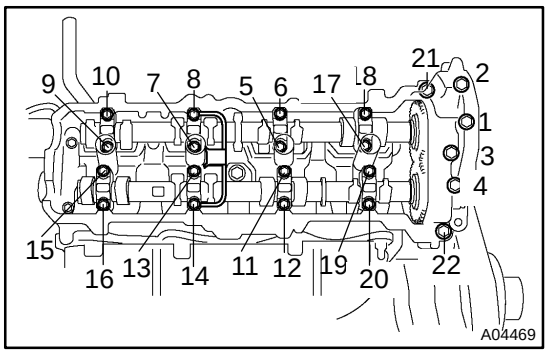

(11) Uniformly tighten the 22 bearing cap bolts in several passes, in the sequence shown.

Torque:

7.5 N·m (80 kgf·cm, 69 in.·lbf) for bolt A

16 N·m (160 kgf·cm, 12 ft·lbf) for others

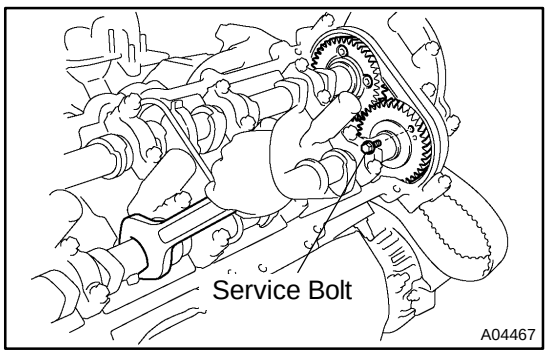

(12) Boring the service bolt installed in the driven sub–gear upward by turning the hexagon wrench head portion of the camshaft with a wrench.

(13) Remove the service bolt.

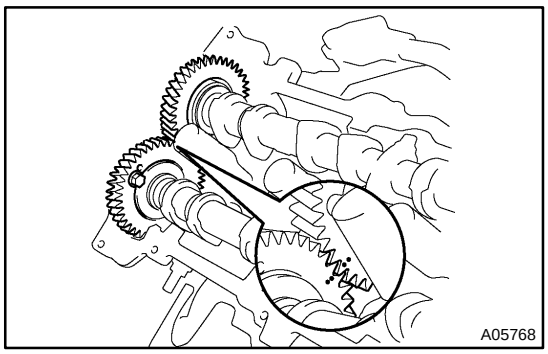

(b) Install the LH camshafts.

(1) Apply MP grease to the thrust portion of the intake and exhaust camshafts.

(2) Place the intake and exhaust camshafts.

(3) Engage the intake gear to the exhaust gear by meeting the timing marks (2 dot marks) on each gear.

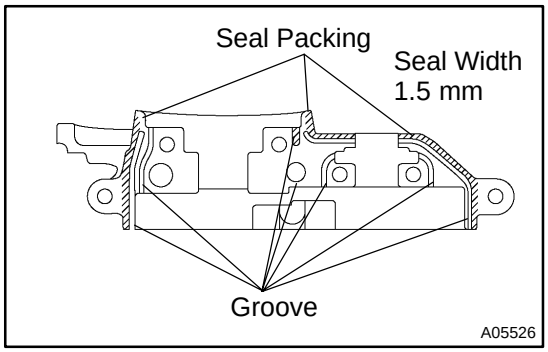

(4) Remove any old packing (FIPG) material.

(5) Apply seal packing to the front bearing cap.

Seal packing: Part No. 08826–00080 or equivalent

- ▲ Install a nozzle that has been cut to a 1.5 mm (0.06 in.) opening.
- ▲ Parts must be assembled within 5 minutes of application. Otherwise the material must be removed and reapplied.
- ▲ Immediately remove nozzle from the tube and reinstall cap.

NOTICE:

Do not apply seal packing to the front bearing cap grooves.

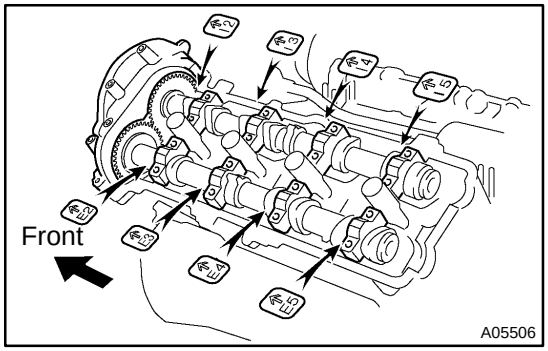

(6) Install the front bearing cap.

HINT:

Installing the front bearing cap will determine the thrust portion of the camshaft.

(7) Install the other bearing cap in the sequence shown with the arrow mark facing forward.

HINT:

Align the arrow marks at the front and rear of the cylinder head with the mark on the bearing cap.

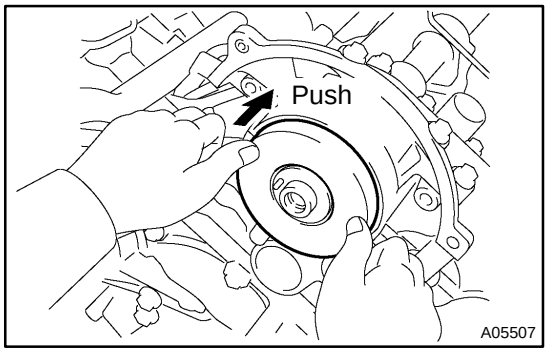

(8) Push in the camshaft oil seal.

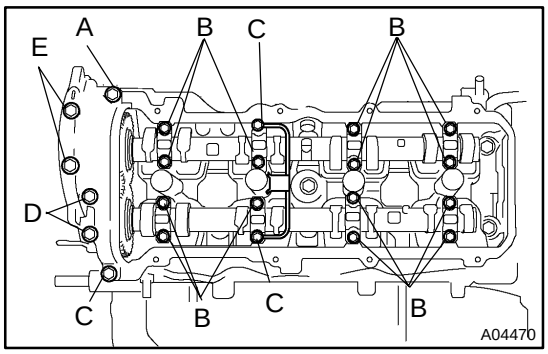

(9) Apply a light coat of engine oil on the threads and under the heads (D and E) of the bearing cap bolts.

HINT:

Do not apply engine oil under the heads of the bearing cap bolt (A), (B) and (C).

(10) Install the oil feed pipe and 22 bearing cap bolts as shown.

HINT:

Each bolt length is indicated in the illustration.

Bolt length:

25 mm (0.98 in.) for A
38 mm (1.50 in.) for B
52 mm (2.05 in.) for C
72 mm (2.83 in.) for D
94 mm (3.70 in.) for E

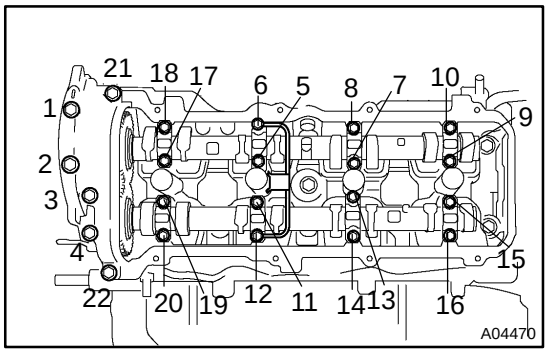

(11) Uniformly tighten the 22 bearing cap bolts in several passes, in the sequence shown.

Torque:
7.5 N·m (80 kgf·cm, 69 in.·lbf) for bolt A
16 N·m (160 kgf·cm, 12 ft·lbf) for others

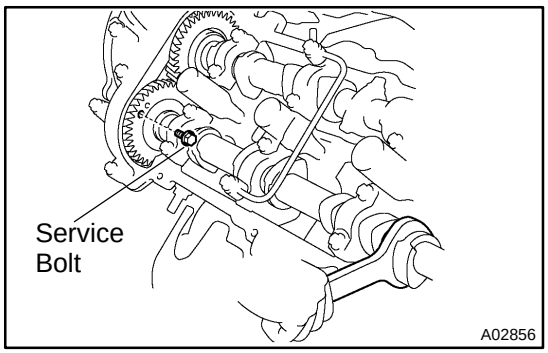

(12) Boring the service bolt installed in the driven sub–gear upward by turning the hexagon wrench head portion of the camshaft with a wrench.

(13) Remove the service bolt.

9. CHECK AND ADJUST VALVE CLEARANCE (See page EM–4)

Turn the camshaft and position the cam lobe upward, and check and adjust the valve clearance.

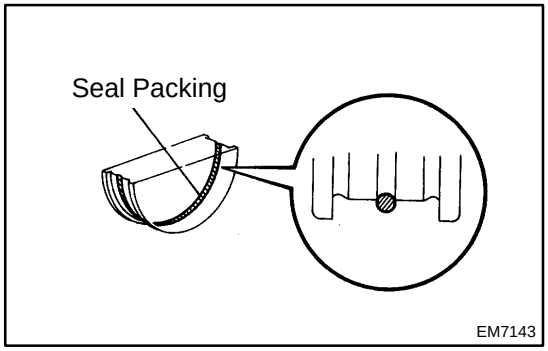

10. INSTALL SEMI–CIRCULAR PLUGS

(a) Remove any old packing (FIPG) material.

(b) Apply seal packing to the semi–circular plug grooves.
Seal packing: Part No. 08826–00080 or equivalent

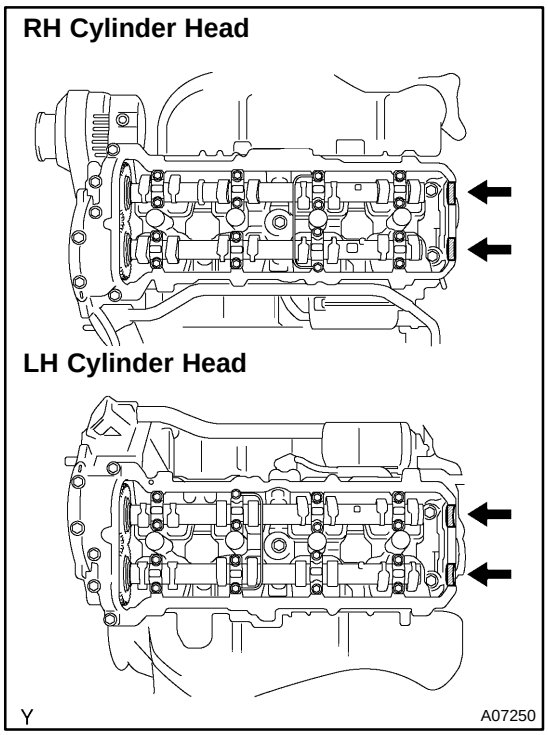

(c) Install the 4 semi–circular plugs to the cylinder heads.

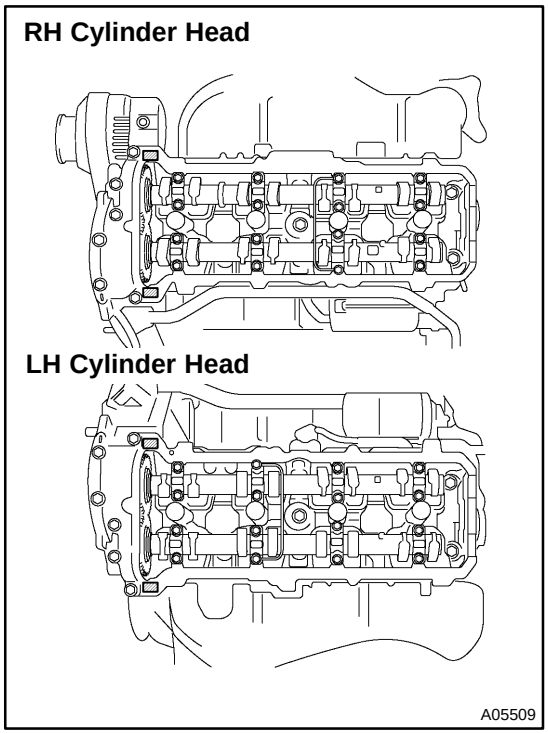

11. INSTALL CYLINDER HEAD COVERS

(a) Remove any old packing (FIPG) material.

(b) Apply seal packing to the cylinder heads as shown in the illustration.

Seal packing: Part No. 08826–00080 or equivalent

(c) Install the gasket to the cylinder head cover.

(d) Install the seal washer to the bolt.

(e) Install the cylinder head cover with the 18 bolts. Uniformly tighten the bolts in several passes. Install the 2 cylinder head covers.

Torque: 6.0 N·m (60 kgf·cm, 53 in.·lbf)

12. INSTALL ENGINE HANGERS

Torque: 37 N·m (380 kgf·cm, 27 ft·lbf)

13. INSTALL OIL DIPSTICK AND GUIDE FOR ENGINE

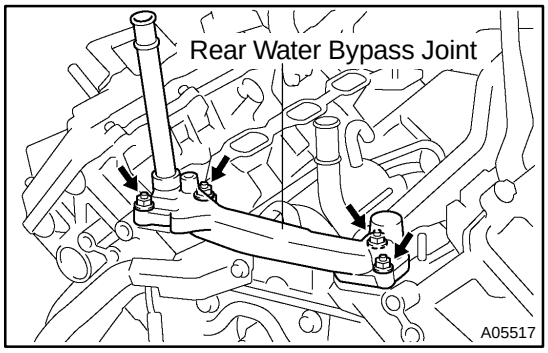

14. INSTALL REAR WATER BYPASS JOINT

(a) Install 2 new gaskets to the cylinder head.

(b) Install the 4 nuts holding the water bypass joint to the cylinder heads. Alternately tighten the nuts.

Torque: 18 N·m (185 kgf·cm, 13 ft·lbf)

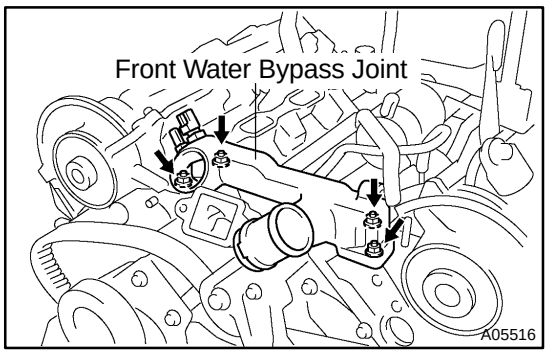

15. INSTALL FRONT WATER BYPASS JOINT

(a) Install 2 new gaskets and the water bypass joint with the 4 nuts. Alternately tighten the nuts.
Torque: 18 N·m (185 kgf·cm, 13 ft·lbf)

(b) Connect the ECT sensor and water sender gauge connectors.

16. INSTALL WATER INLET AND INLET HOUSING ASSEMBLY (See page CO–8)

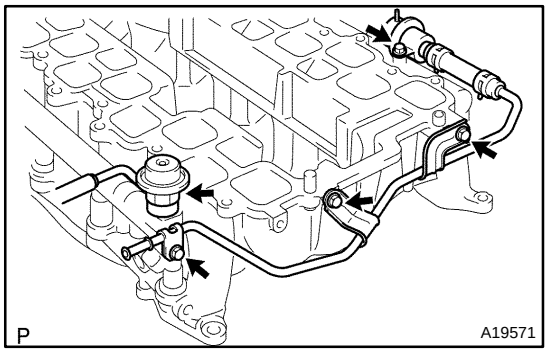

17. ASSEMBLE UPPER AND LOWER INTAKE MANIFOLDS

(a) Install the 2 delivery pipes and 8 injectors (See page SF–23).

(b) Install new 2 gaskets, fuel pressure regulator and fuel pulsation damper.

(c) Install the fuel return hose to the lower intake manifold with the 3 bolts.

(d) Connect the fuel return hose to the fuel pressure regulator.

(e) Install new 2 gaskets, union and brake booster tube to the upper intake manifold with the bolt.

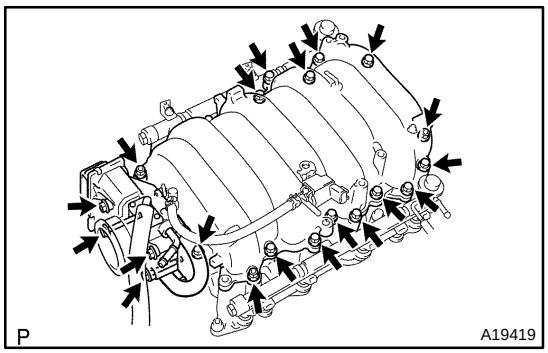

(f) Install the VSV for EVAP to the upper intake manifold, and connect the EVAP hose.

(g) Install a new gasket and upper intake manifold with the 13 bolts and 3 nuts.

(h) Install the throttle body (See page SF–32).

(i) Install the LH throttle body cover bracket with the 2 nuts.

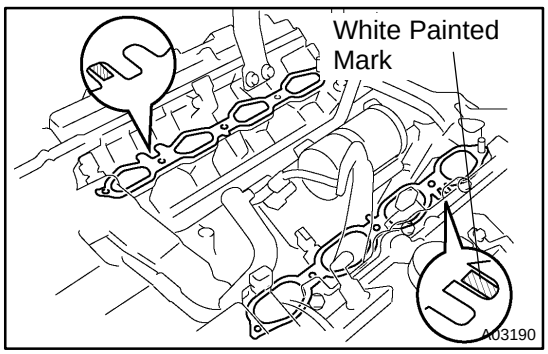

18. INSTALL INTAKE MANIFOLD ASSEMBLY

(a) Place 2 new gaskets on the cylinder heads with white painted mark facing upward.

NOTICE:

- **Align the port holes of the gasket and cylinder head.**
- **Be careful of the installation direction.**

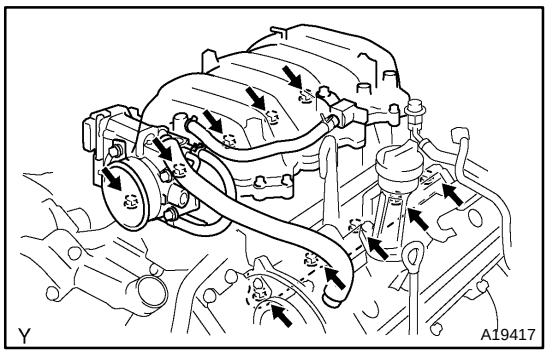

(b) Place the intake manifold assembly on the cylinder heads.
(c) Install and uniformly tighten the 6 bolts and 4 nuts in several passes.
Torque: 18 N·m (185 kgf·cm, 13 ft·lbf)
(d) Install the accelerator cable bracket to the intake manifold with the 2 nuts.
Torque: 18 N·m (185 kgf·cm, 13 ft·lbf)

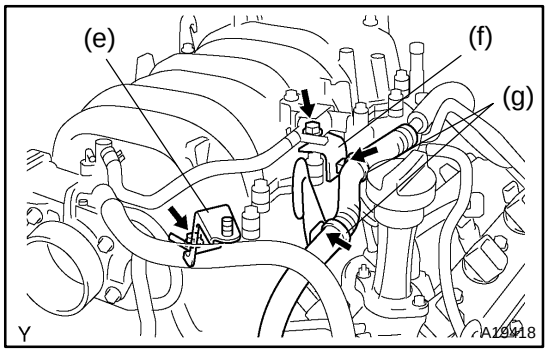

(e) Install the throttle body cover bracket to the intake manifold.
Torque: 7.5 N·m (80 kgf·cm, 66 in.·lbf)
(f) Install the wire bracket to the intake manifold.
(g) Connect the engine wire to the engine hanger and wire bracket.
(h) Install the engine wire to the LH No.1 timing belt rear plate.

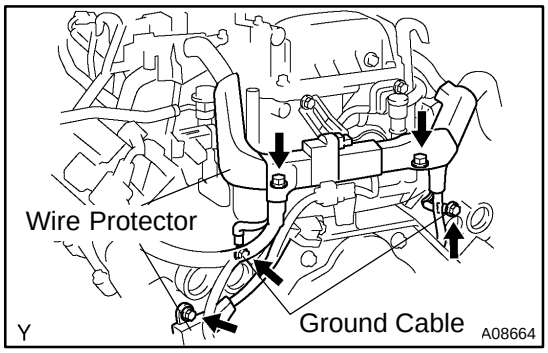

(i) Connect the wire protector to the rear water bypass joint and RH and LH cylinder heads with the 3 bolts.
(j) Install the 2 ground cables to the RH and LH cylinder heads.
(k) Install the guide for the A/T bracket to the LH cylinder head.

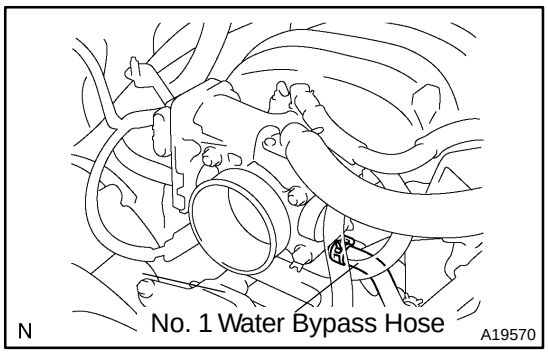

(l) Connect the No. 1 water bypass hose (from water inlet housing) from the throttle body.

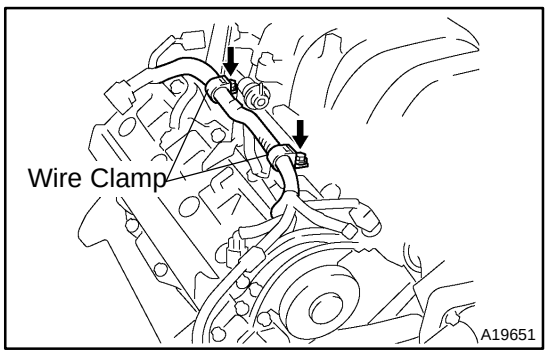

(m) Connect the 2 wire clamps to the wire clamp bracket on the RH delivery pipe.

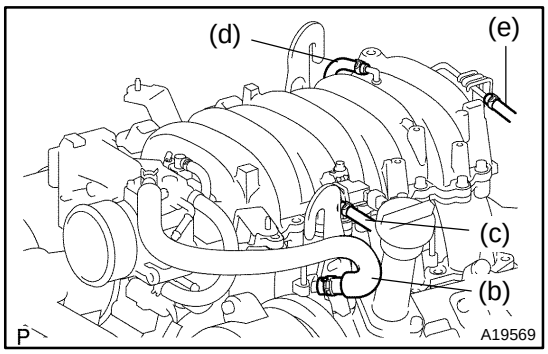

19. CONNECT HOSES TO INTAKE MANIFOLD

(a) Connect the vacuum hose to the pipe.

(b) Connect the PCV hose to the PCV valve on the LH the cylinder head.

(c) Connect the EVAP hose (from charcoal canister) to the VSV for EVAP.

(d) Connect the PS air hose to the intake manifold.

(e) Connect the brake booster tube.

20. CONNECT CONNECTORS TO INTAKE MANIFOLD

(a) Connect the throttle position sensor connector.

(b) Connect the accelerator pedal position sensor connector.

(c) Connect the throttle motor connector.

(d) Connect the VSV connector for the EVAP.

(e) Connect the 8 injector connectors.

(f) Connect the ECT sensor connector.

(g) Connect the water sender gauge connector.

(h) Connect the 8 ignition coil connectors.

(i) Connect the 2 heated oxygen sensor connectors.

21. CONNECT FUEL INLET HOSE (See page SF–21) AND FUEL RETURN HOSE

22. INSTALL TIMING BELT REAR PLATES

(a) Install the RH timing belt rear plates.

Install the No. 1 timing belt rear plate to the cylinder head with the 3 bolts and stud bolt.

Torque: 7.5 N·m (80 kgf·cm, 66 in.·lbf)

(b) Install the LH timing belt rear plates.

(1) Connect the wire clamp to the No. 1 timing belt rear plate.

(2) Install the No. 1 timing belt rear plate to the cylinder head with the 3 bolts.

Torque: 7.5 N·m (80 kgf·cm, 66 in.·lbf)

23. INSTALL THROTTLE BODY COVER

24. INSTALL IGNITION COILS (See page IG–5)

25. INSTALL OIL DIPSTICK AND GUIDE FOR A/T

26. INSTALL FRONT EXHAUST PIPE (See page EM–117)

27. INSTALL PS PUMP (See page EM–76)

28. INSTALL CAMSHAFT POSITION SENSOR (See page IG–9)

29. INSTALL CAMSHAFT TIMING PULLEYS (See page EM–21)

30. CONNECT TIMING BELT TO CAMSHAFT TIMING PULLEYS (See page EM–21)

31. CHECK ENGINE OIL LEVEL

ENGINE UNIT (2WD)

EM11Z–05

COMPONENTS

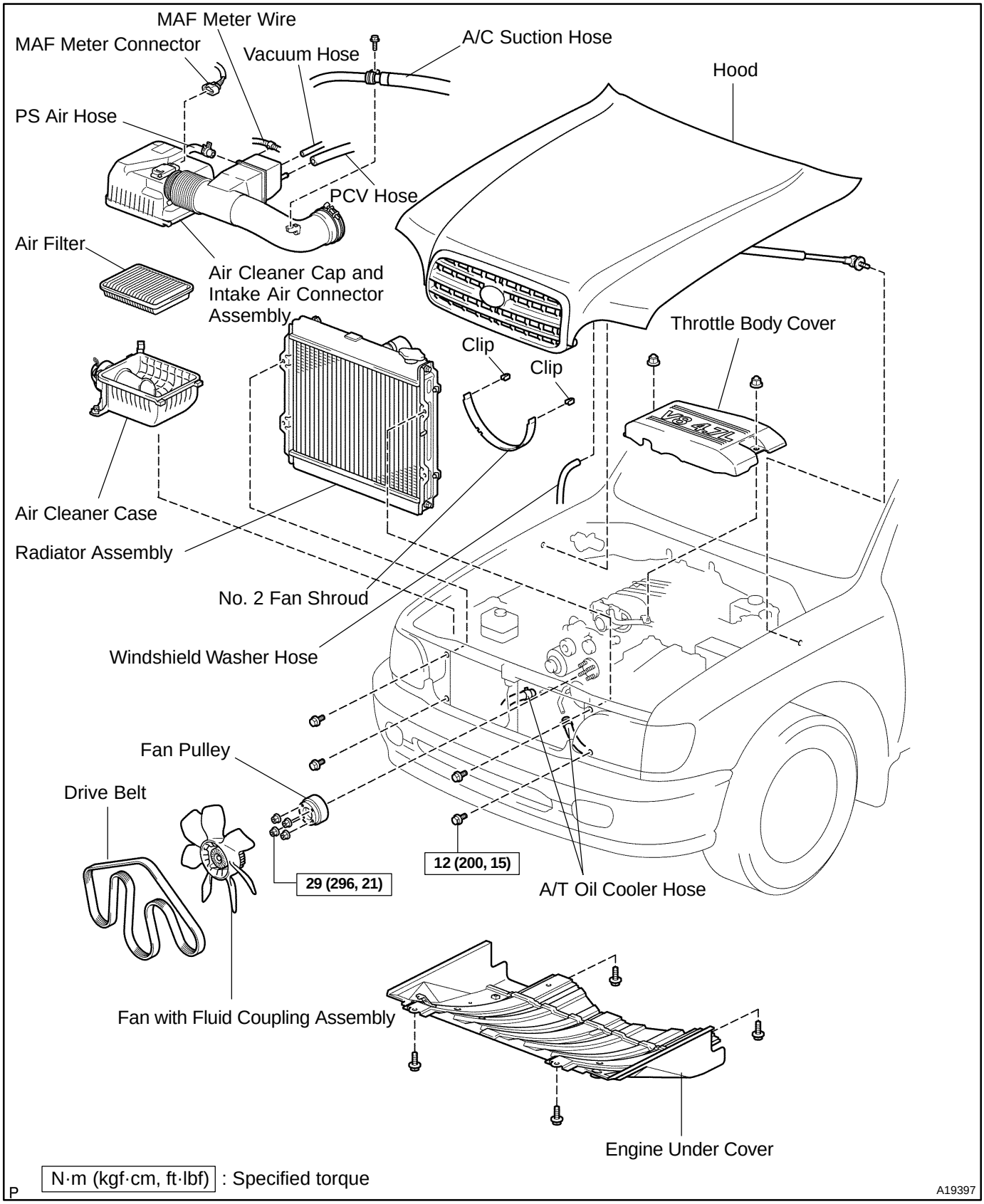

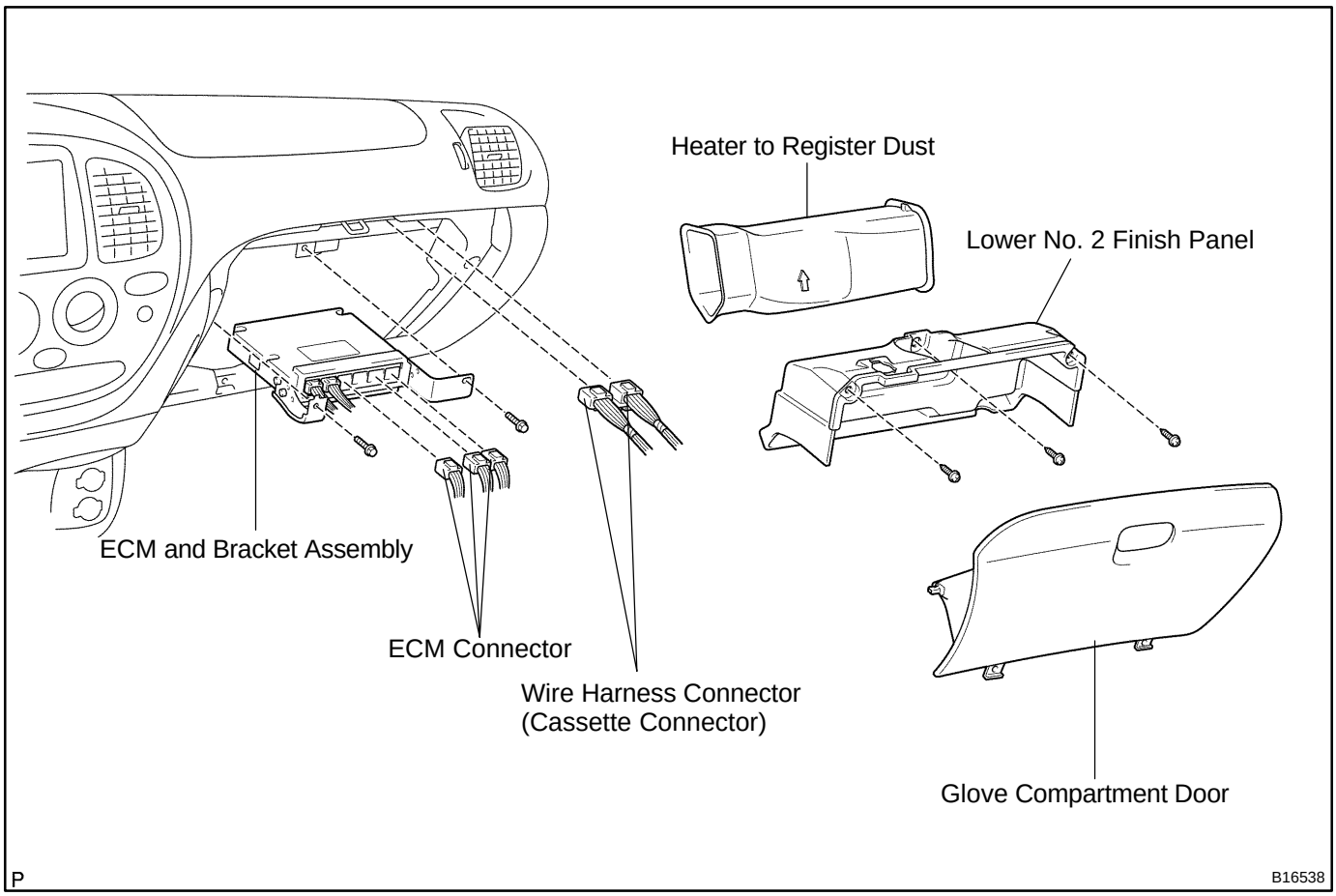
Heater to Register Dust
Lower No. 2 Finish Panel
ECM and Bracket Assembly
ECM Connector
Wire Harness Connector
(Cassette Connector)
Glove Compartment Door
P
B16538

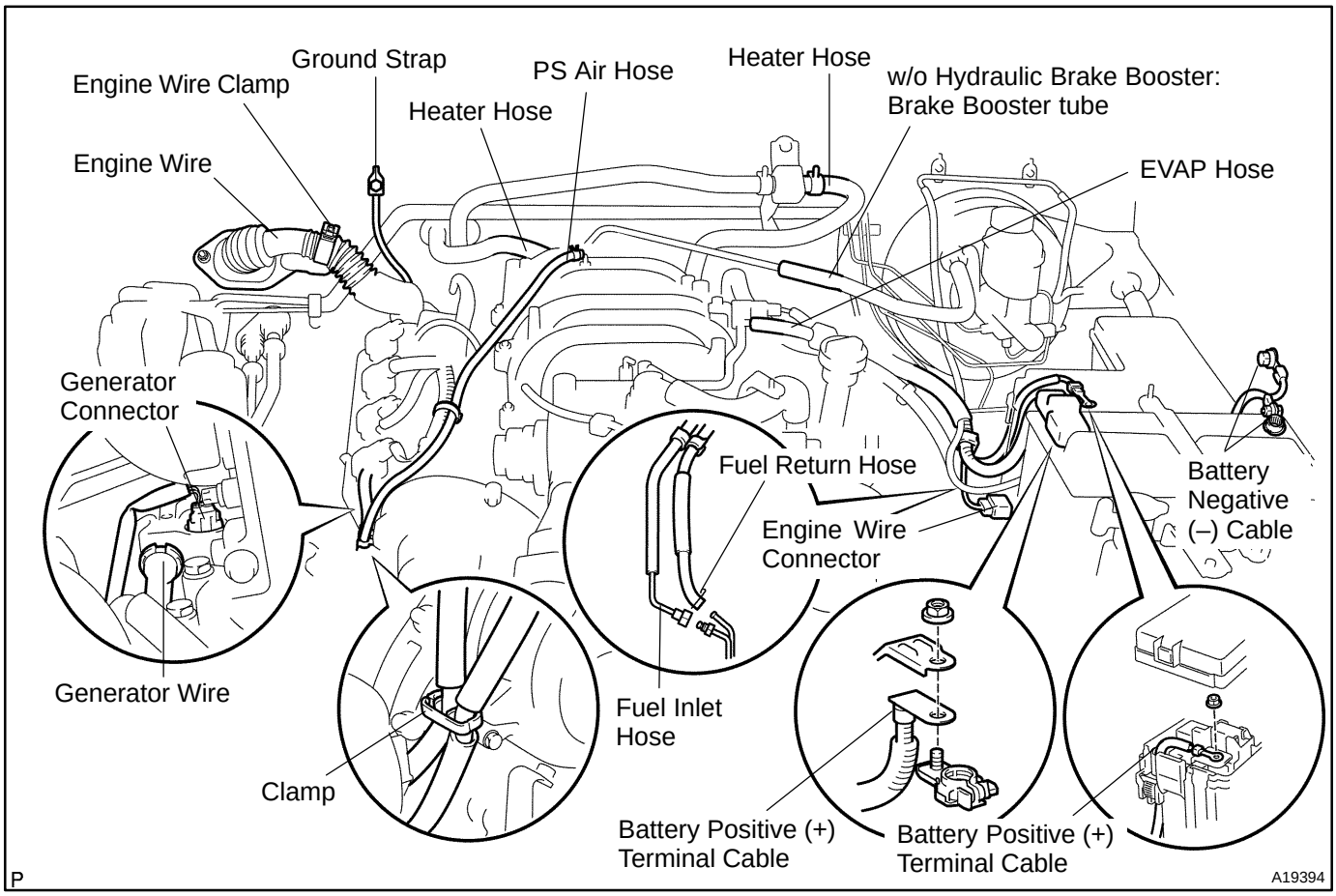
Ground Strap
Engine Wire Clamp
PS Air Hose
Heater Hose
Heater Hose
w/o Hydraulic Brake Booster:
Brake Booster tube
Engine Wire
EVAP Hose
Generator
Connector
Fuel Return Hose
Battery
Negative
(–) Cable
Engine Wire
Connector
Generator Wire
Fuel Inlet
Hose
Clamp
Battery Positive (+)
Terminal Cable
Battery Positive (+)
Terminal Cable
P
A19394

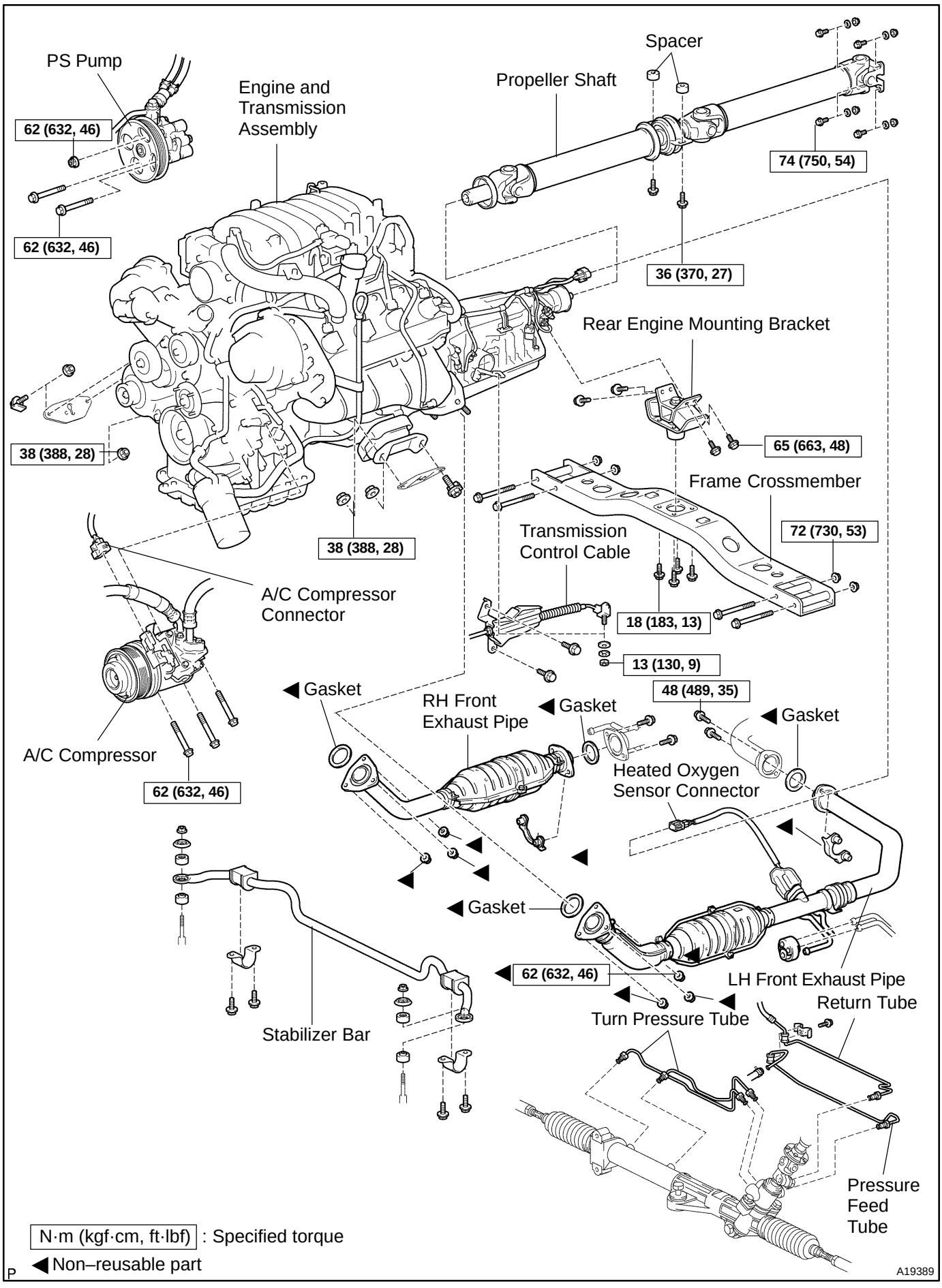
PS Pump
62 (632, 46)
62 (632, 46)
Engine and
Transmission
Assembly
Spacer
Propeller Shaft
74 (750, 54)
36 (370, 27)
Rear Engine Mounting Bracket
65 (663, 48)
38 (388, 28)
38 (388, 28)
Frame Crossmember
72 (730, 53)
Transmission
Control Cable
18 (183, 13)
13 (130, 9)
A/C Compressor
Connector
A/C Compressor
62 (632, 46)
Gasket
RH Front
Exhaust Pipe
Gasket
48 (489, 35)
Gasket
Heated Oxygen
Sensor Connector
Gasket
62 (632, 46)
LH Front Exhaust Pipe
Return Tube
Turn Pressure Tube
Stabilizer Bar
Pressure
Feed
Tube
N·m (kgf·cm, ft·lbf) : Specified torque
◀ Non–reusable part
P
A19389

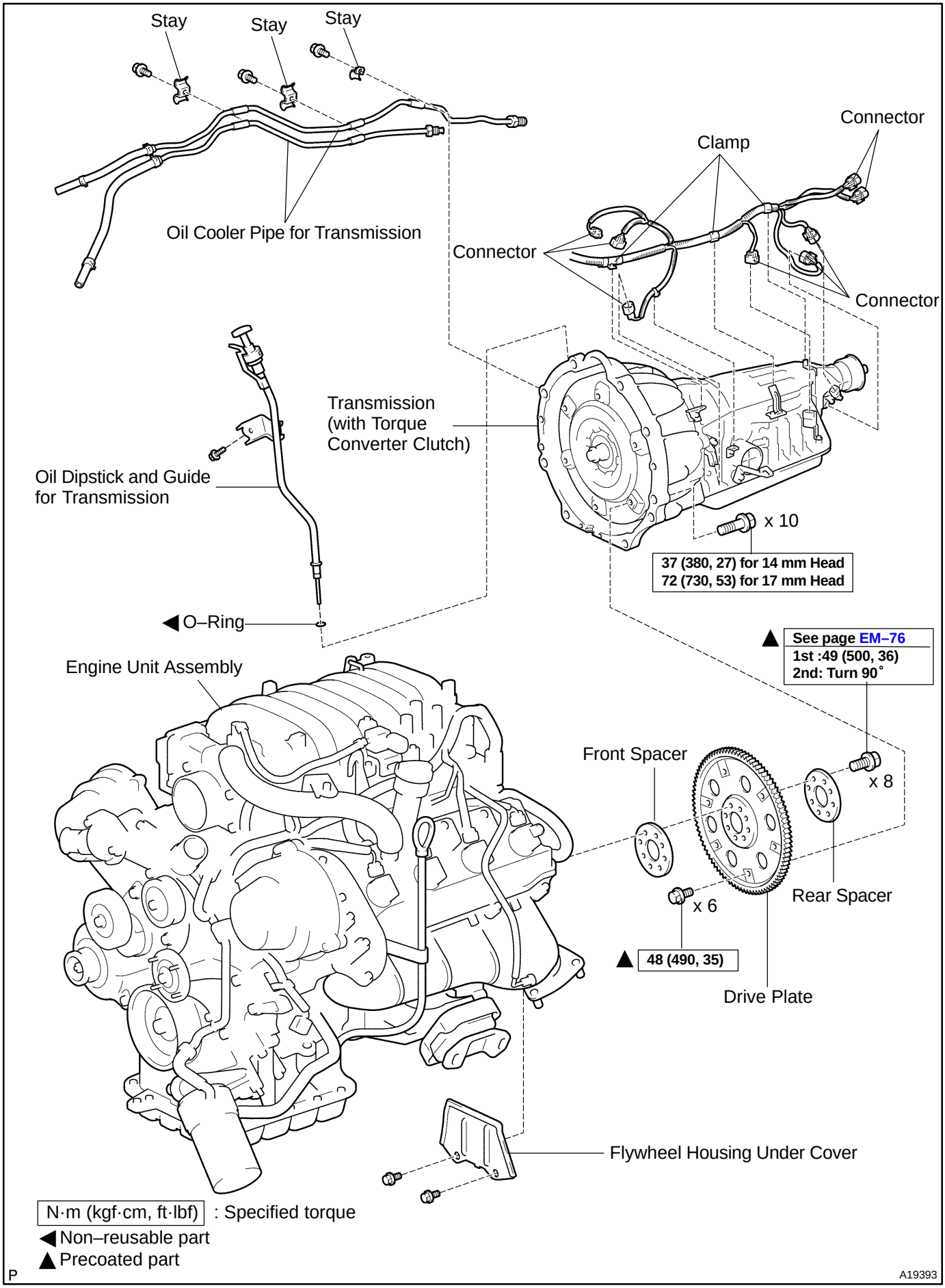
Stay
Stay
Stay
Oil Cooler Pipe for Transmission
Connector
Clamp
Connector
Connector
Transmission
(with Torque
Converter Clutch)
Oil Dipstick and Guide
for Transmission
x 10
37 (380, 27) for 14 mm Head
72 (730, 53) for 17 mm Head
◀ O–Ring
▲ See page EM–76
1st :49 (500, 36)
2nd: Turn 90°
Engine Unit Assembly
Front Spacer
x 8
x 6
Rear Spacer
▲ 48 (490, 35)
Drive Plate
Flywheel Housing Under Cover
N·m (kgf·cm, ft·lbf) : Specified torque
◀ Non–reusable part
▲ Precoated part
P
A19393

EM120–05

REMOVAL

1. REMOVE ENGINE HOOD

2. REMOVE ENGINE UNDER COVER

3. DRAIN ENGINE COOLANT

4. REMOVE RADIATOR ASSEMBLY (See page CO–18)

5. REMOVE THROTTLE BODY COVER

6. REMOVE AIR CLEANER AND INTAKE AIR CONNECTOR ASSEMBLY

(a) Disconnect the MAF meter connector.
(b) Loosen the 3 bolts, and remove the air cleaner case.
(c) Remove the A/C suction hose from the intake air connector.
(d) Disconnect the PS air hose, air inlet hose for EVAP, PCV hose and MAF meter wire from the air intake connector.
(e) Disconnect the intake air connector from the throttle body.

7. DISCONNECT BATTERY CABLES

(a) Disconnect the clamp on battery negative (–) cable from the No. 2 relay box.
(b) Disconnect the battery positive (+) terminal cable.
(c) Disconnect battery negative (–) cable from the left fender apron.

8. REMOVE DRIVE BELT, FAN, FLUID COUPLING AND FAN PULLEY

(a) Loosen the 4 nuts holding the fluid coupling to the fan bracket.
(b) Remove the drive belt (See page CH–7 or CH–19).
(c) Remove the 4 nuts, the fan, fluid coupling assembly and fan pulley.

9. DISCONNECT ENGINE WIRE FROM CABIN

(a) Remove the glove compartment door.
(b) Remove the lower No. 2 panel.
(c) Remove the 3 screws, and disconnect the ECM from the body bracket.
(d) Disconnect the 3 wire harness connectors from the ECM.
(e) Disconnect the 2 wire harness connectors (cassette connector).

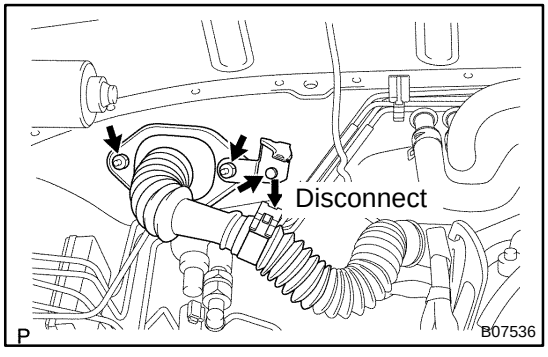

(f) Disconnect the engine wire from the engine wire bracket and remove the bolt, 2 nuts and bracket.
(g) Pull out the engine wire from the cowl panel.

10. DISCONNECT HOSES, WIRES, CONNECTORS, CLAMPS, GROMMET AND CABLES

(a) Disconnect the 2 PS air hoses from hose clamp on the No. 3 RH timing belt cover.
(b) Disconnect the generator wire.
(c) Disconnect the generator connector.
(d) Disconnect the hose clamp for the PS air hose.

(e) Disconnect the PS air hose from the upper intake manifold.
(f) Disconnect the 2 heater hoses.
(g) Disconnect the ground strap from the cowl panel.
(h) Disconnect the fuel inlet hose and clamps.
(i) Disconnect the fuel return hose and clamp.
(j) Disconnect the air inlet hose from the charcoal canister.
(k) Disconnect the EVAP hose from the VSV for EVAP.
(l) w/o Hydraulic brake booster:
Disconnect the brake booster tube.

11. REMOVE FRONT EXHAUST PIPES (See page EM–117)

12. REMOVE PROPELLER SHAFT (See page PR–3)

13. REMOVE FRONT STABILIZER BAR (See page SA–80)

14. DISCONNECT POWER STEERING GEAR PIPES

Disconnect the pressure feed tube, turn tube and pressure tubes from the PS gear assembly (See page SR–55).

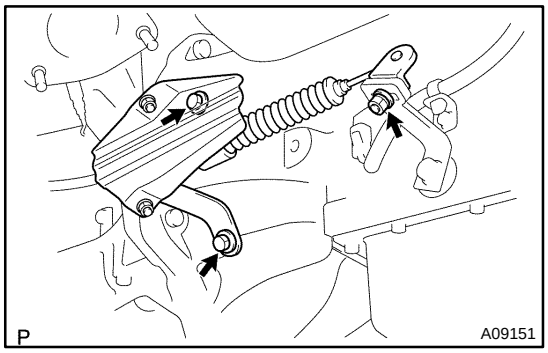

15. REMOVE TRANSMISSION CONTROL CABLE

(a) Remove the 2 bolts and control cable bracket from the transmission.
(b) Remove the control cable from the control shift lever.

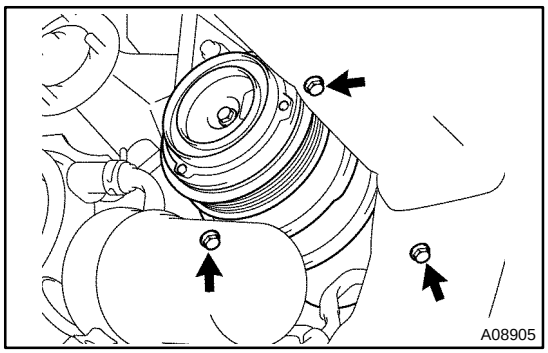

16. DISCONNECT A/C COMPRESSOR FROM ENGINE

(a) Disconnect the A/C compressor connector.
(b) Remove the 3 bolts, and disconnect the A/C compressor from the engine.

HINT:
Suspend the A/C compressor securely.

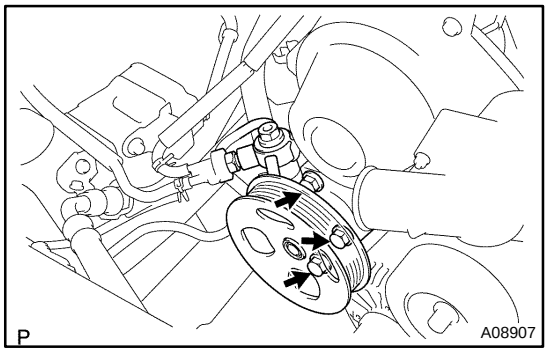

17. DISCONNECT PS PUMP FROM ENGINE

Remove the 3 bolts, and disconnect the PS pump from the engine.

HINT:
Suspend the PS pump securely.

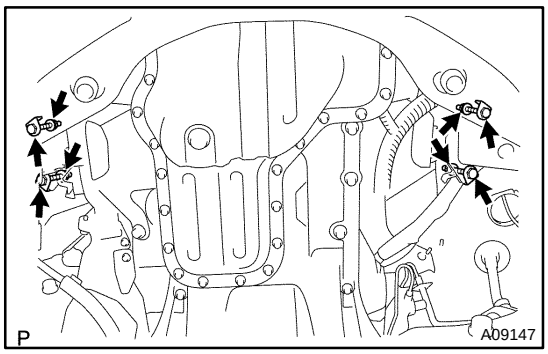

18. REMOVE ENGINE MOUNTING BRACKETS

(a) Attach the engine chain hoist to the engine hangers.

(b) Remove the 4 nuts and 4 bolts holding the engine mounting brackets to the frame brackets.

19. PLACE JACK UNDER TRANSMISSION

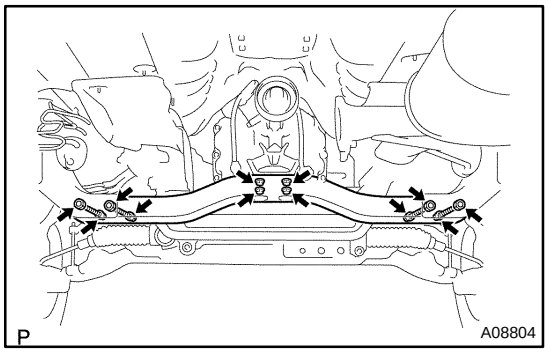

20. REMOVE ENGINE REAR MOUNTING BRACKET

(a) Remove the 8 bolts, 2 nuts and frame crossmember.

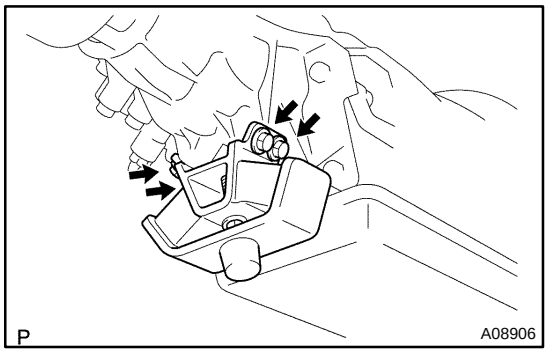

(b) Remove the 4 bolts and engine rear mounting bracket from the transmission.

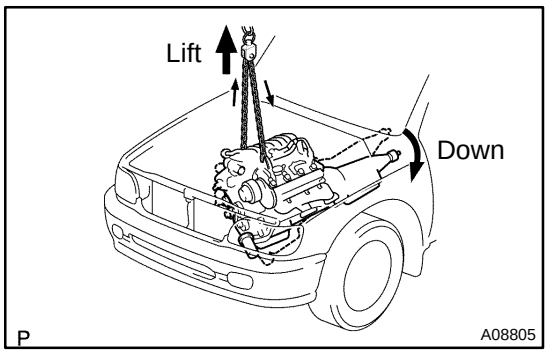

21. REMOVE ENGINE AND TRANSMISSION ASSEMBLY FROM VEHICLE

(a) Lift the engine out of the vehicle slowly and carefully.

HINT:

Make sure the engine is clear of all wiring, hoses and cables.

(b) Place the engine and transmission assembly onto the stand.

22. DISCONNECT ENGINE WIRE FROM TRANSMISSION

(a) Disconnect the 5 connectors.

(b) Disconnect the 2 wire clamps.

23. REMOVE OIL DIPSTICK GUIDE AND DIPSTICK FOR TRANSMISSION

(a) Disconnect the 2 breather hoses from the dipstick guide.

(b) Remove the 2 bolts.

(c) Pull out the dipstick guide and dipstick from the dipstick tube of transmission.

(d) Remove the O–ring from the dipstick guide.

24. REMOVE OIL COOLER PIPES FOR TRANSMISSION

(a) Remove the 3 bolts and 3 stays.

(b) Loosen the 2 union nuts, and remove the 2 oil cooler pipes.

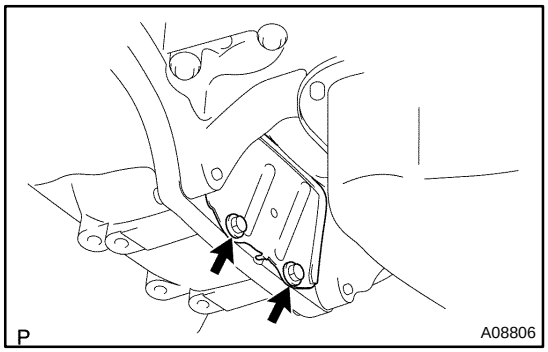

25. REMOVE TORQUE CONVERTER CLUTCH BOLTS

(a) Remove the 2 bolts and flywheel housing under cover.

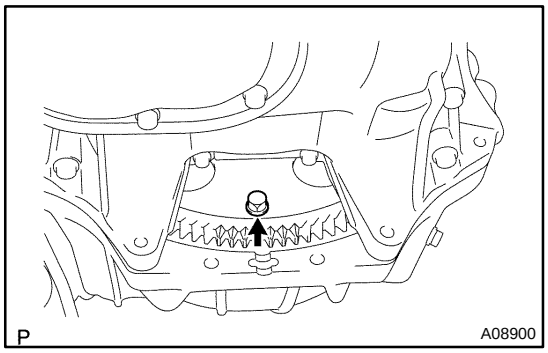

(b) Turn the crankshaft pulley bolt to gain access to each bolt.

(c) Hold the crankshaft pulley bolt with a wrench, and remove the 6 bolts.

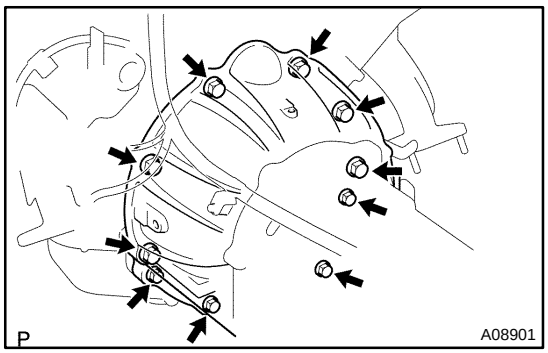

26. REMOVE TRANSMISSION

(a) Remove the 10 bolts.

(b) Remove the transmission together with the torque converter clutch from the engine.

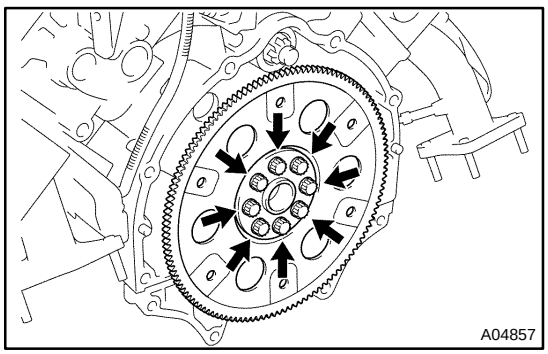

27. REMOVE DRIVE PLATE

Remove the 8 bolts, front spacer, drive plate and rear spacer.

EM121–05

INSTALLATION

1. INSTALL DRIVE PLATE

HINT:

- ▲ The mounting bolts are tightened in 2 progressive steps (steps (c) and (e)).
- ▲ If any one of the mounting bolts is broken or deformed, replace it.

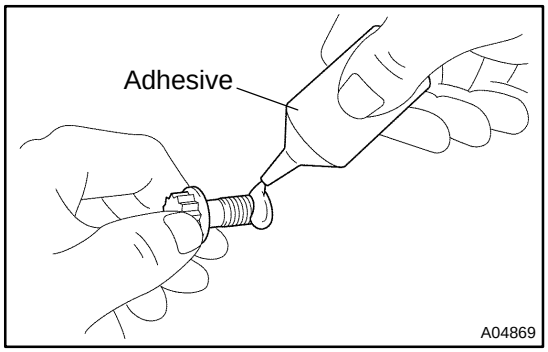

(a) Apply adhesive to 2 or 3 threads of the mounting bolt end.
Adhesive:
Part No. 08833–00070, THREE BOND 1324 or equivalent

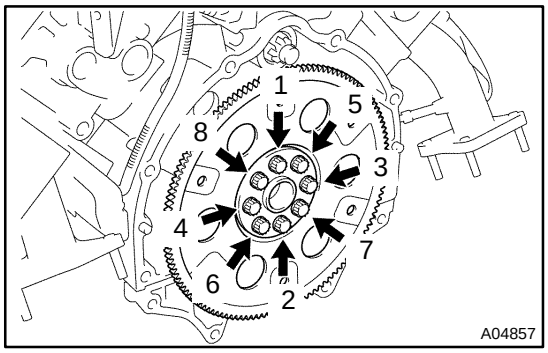

(b) Install the front spacer, drive plate and rear spacer on the crankshaft.
(c) Install and uniformly tighten the 8 mounting bolts in several passes, in the sequence shown.
Torque: 49 N·m (500 kgf·cm, 36 ft·lbf)

If any one of the mounting bolts does not meet the torque specification, replace the mounting bolt.

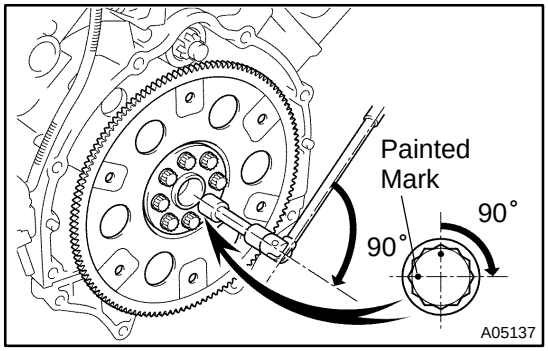

(d) Mark the mounting bolt with paint.
(e) Retighten the mounting bolts by 90° in the numerical order shown.
(f) Check that the painted mark is now at a 90° angle to (e).

2. INSTALL TRANSMISSION TO ENGINE

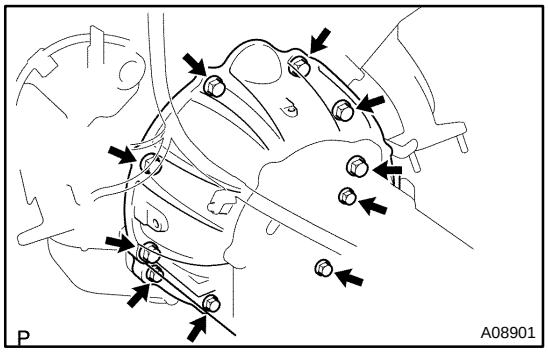

(a) Check the torque converter clutch installation (See page AT–38).
(b) Attach the transmission to the engine.
(c) Install the 10 bolts.
Torque:
37 N·m (380 kgf·cm, 27 ft·lbf) for 14 mm head
72 N·m (730 kgf·cm, 53 ft·lbf) for 17 mm head

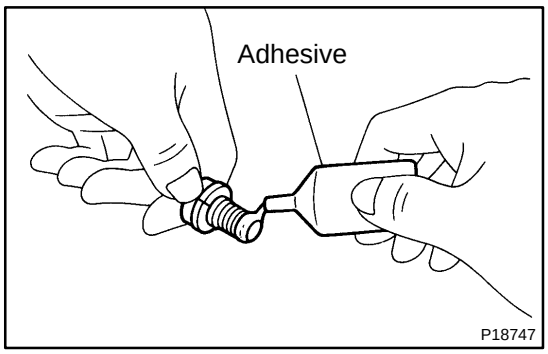

3. INSTALL TORQUE CONVERTER CLUTCH BOLTS

(a) Apply adhesive to 2 or 3 threads of the bolt end.
Adhesive:
Part No. 08833–00070, THREE BOND 1324 or equivalent

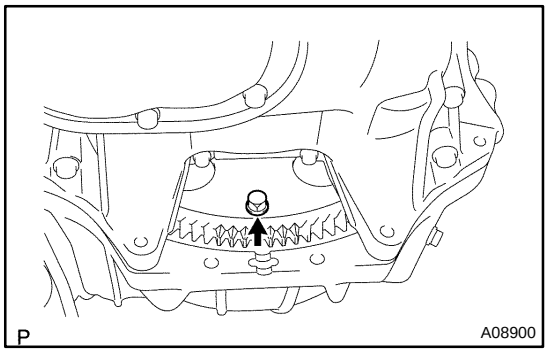

(b) Hold the crankshaft pulley bolt with a wrench, and install the 6 bolts evenly.
Torque: 48 N·m (490 kgf·cm, 35 ft·lbf)

HINT:
First install the black colored bolt, install the other bolts.

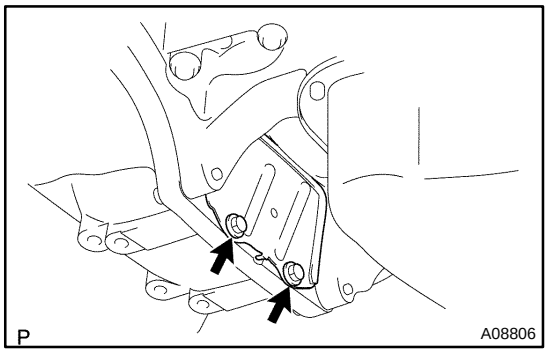

(c) Install the flywheel housing under cover with the 2 bolts.
Torque: 18 N·m (185 kgf·cm, 13 ft·lbf)

4. INSTALL OIL COOLER PIPE FOR TRANSMISSION

5. INSTALL OIL DIPSTICK GUIDE AND DIPSTICK FOR TRANSMISSION

(a) Install a new O–ring to the dipstick guide.
(b) Apply soapy water to the O–ring.
(c) Connect the dipstick guide end to the dipstick tube of the oil pan.
(d) Install the dipstick guide with the bolt.
(e) Install the dipstick.
(f) Connect the 2 breather hoses to the dipstick guide.

6. CONNECT ENGINE WIRE TO TRANSMISSION

(a) Connect the 5 connectors.
(b) Connect the 2 wire clamps.

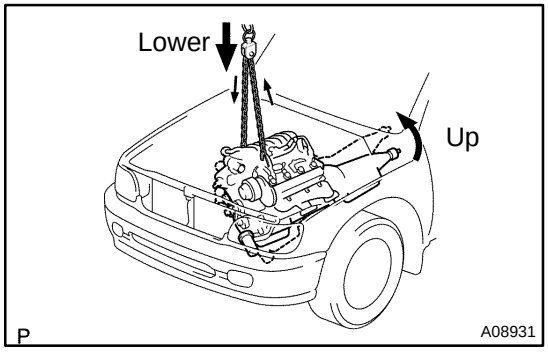

7. INSTALL ENGINE AND TRANSMISSION ASSEMBLY IN VEHICLE

(a) Attach the engine chain hoist to the engine hangers.
(b) Slowly lower the engine and transmission assembly into the engine compartment.
(c) Attach the engine mounting brackets to the frame brackets.

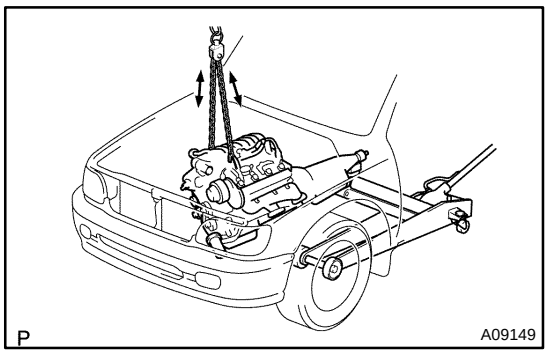

(d) Keep the engine level with a jack.

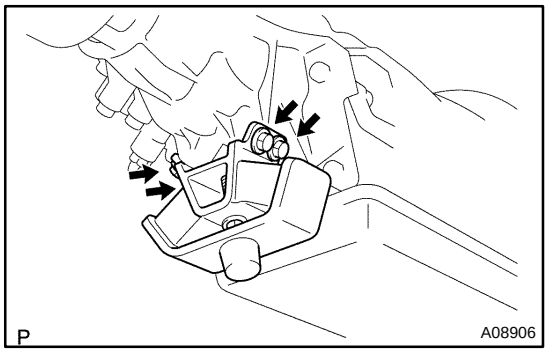

8. INSTALL ENGINE REAR MOUNTING BRACKET

(a) Install the engine rear mounting bracket to the transmission with the 4 bolts.
Torque: 65 N·m (663 kgf·cm, 48 ft·lbf)

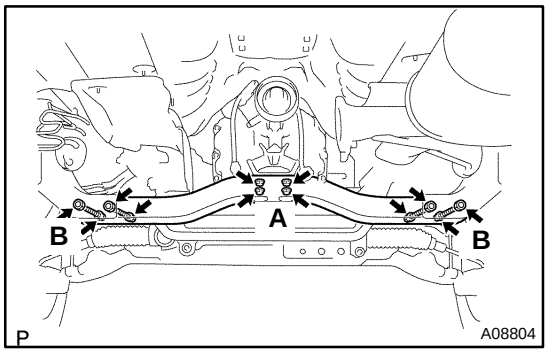

(b) Install the frame crossmember with the 8 bolts and 4 nuts.
Torque:
18 N·m (183 kgf·cm, 13 ft·lbf) for bolts (A)
72 N·m (730 kgf·cm, 53 ft·lbf) for nuts (B)

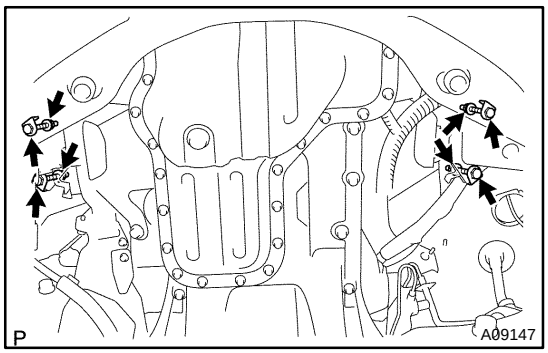

9. INSTALL ENGINE MOUNTING BRACKETS

(a) Install the engine mounting brackets to the frame brackets with the 2 nuts and 4 bolts.
Torque: 38 N·m (388 kgf·cm, 28 ft·lbf)

(b) Remove the engine chain hoist.

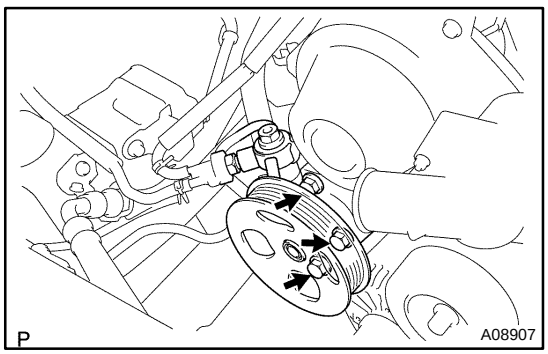

10. INSTALL PS PUMP

Install the PS pump with the 3 bolts.
Torque: 17 N·m (175 kgf·cm, 13 ft·lbf)

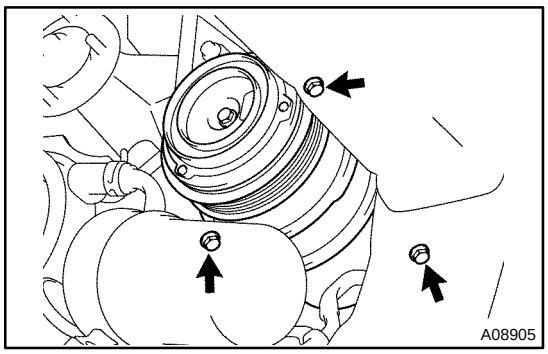

11. INSTALL A/C COMPRESSOR

(a) Install the A/C compressor with the 3 bolts.
Torque: 49 N·m (500 kgf·cm, 36 ft·lbf)

(b) Connect the A/C compressor connector.

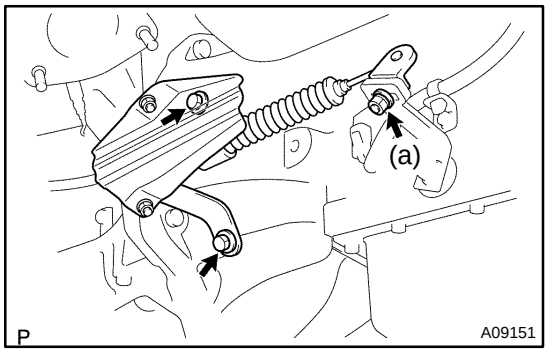

12. INSTALL TRANSMISSION CONTROL CABLE

(a) Install the control cable to the control shift lever.
Torque: 13 N·m (130 kgf·cm, 9 ft·lbf)

(b) Install the control cable bracket to the transmission with the 2 bolts.

13. CONNECT POWER STEERING GEAR PIPES

Connect the pressure feed tube, turn tube and turn pressure tubes to the PS gear assembly (See page SR–70).

14. INSTALL FRONT STABILIZER BAR (See page SA–82)

15. INSTALL PROPELLER SHAFT (See page PR–8)

16. INSTALL FRONT EXHAUST PIPES (See page EM–117)

17. CONNECT HOSES, WIRES, CONNECTORS, CLAMPS, GROMMET AND CABLES

(a) Connect the 2 PS air hoses to hose clamp on the No. 3 RH timing belt cover.
(b) Connect the generator wire.
(c) Connect the generator connector.
(d) Connect the hose clamp for the PS air hose.
(e) Connect the PS air hose to the upper intake manifold.
(f) Connect the 2 heater hoses.
(g) Connect the ground strap connector.
(h) Connect the fuel inlet hose and clamps.
(i) Connect the fuel return hose and clamp.
(j) Connect the air inlet hose to the charcoal canister.
(k) Connect the EVAP hose to the VSV for EVAP.
(l) w/o Hydraulic brake booster:
Connect the brake booster tube.

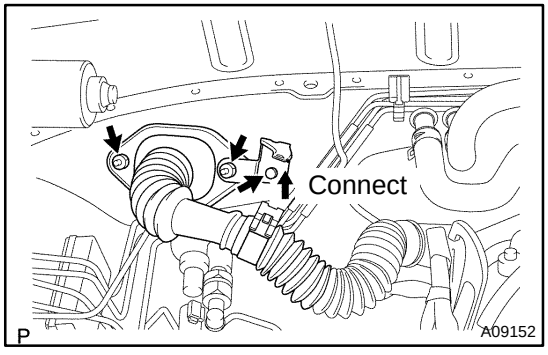

18. CONNECT ENGINE WIRE TO CABIN

(a) Push into the engine wire through the cowl panel.
(b) Install the engine wire bracket with the 2 nuts and bolt and connect the engine wire to the bracket.
(c) Connect the 2 wire harness connectors (cassette connector).
(d) Connect the 3 connectors to the ECM.
(e) Install the ECM with the 3 screws.
(f) Install the lower No. 2 panel.
(g) Install the glove compartment door.

19. INSTALL FAN PULLEY, FAN, FLUID COUPLING AND DRIVE BELT

(a) Temporarily install the fan pulley, the fan and fluid coupling assembly with the 4 nuts.

(b) Install the drive belt (See page CH–16 or CH–28).

(c) Tighten the 4 nuts holding the fluid coupling to the fan bracket.

20. INSTALL BATTERY CABLES

(a) Connect the clamp on battery negative (–) cable to No.2 relay box.

(b) Connect the battery positive (+) terminal cable.

(c) Connect the battery negative cable to the left fender apron.

21. INSTALL AIR CLEANER AND INTAKE AIR CONNECTOR ASSEMBLY

(a) Install the air cleaner with the 3 bolt.
Torque: 5 N·m (51 kgf·cm, 44 in.·lbf)

(b) Connect the intake air connector to the throttle body.

(c) Connect the MAF meter connector.

(d) Install the A/C suction hose to the intake air connector.

(e) Connect the PS air hose, air inlet hose for EVAP, PCV hose and MAF meter wire to the air intake connector.

22. INSTALL THROTTLE BODY COVER

23. INSTALL RADIATOR ASSEMBLY (See page CO–23)

24. FILL WITH ENGINE COOLANT (See page CO–2)

25. FILL WITH ENGINE OIL (See page LU–2)

26. START ENGINE AND CHECK FOR LEAKS

27. INSTALL ENGINE UNDER COVER

28. INSTALL HOOD

29. PERFORM ROAD TEST

Check for abnormal noise, shock, slippage, correct shift points and smooth operation.

30. RECHECK ENGINE COOLANT AND OIL LEVELS

ENGINE UNIT (4WD)

COMPONENTS

EM11W–03

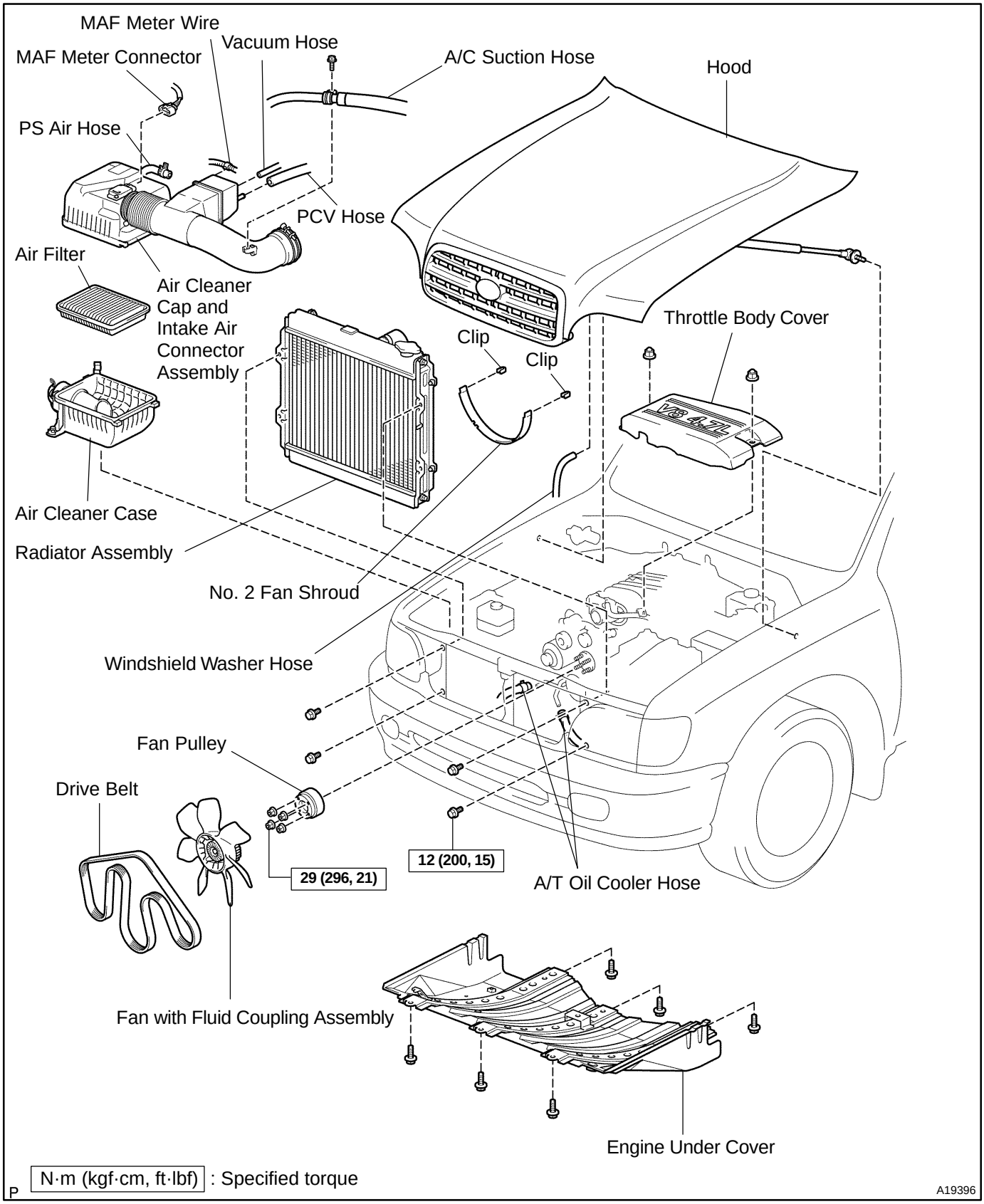

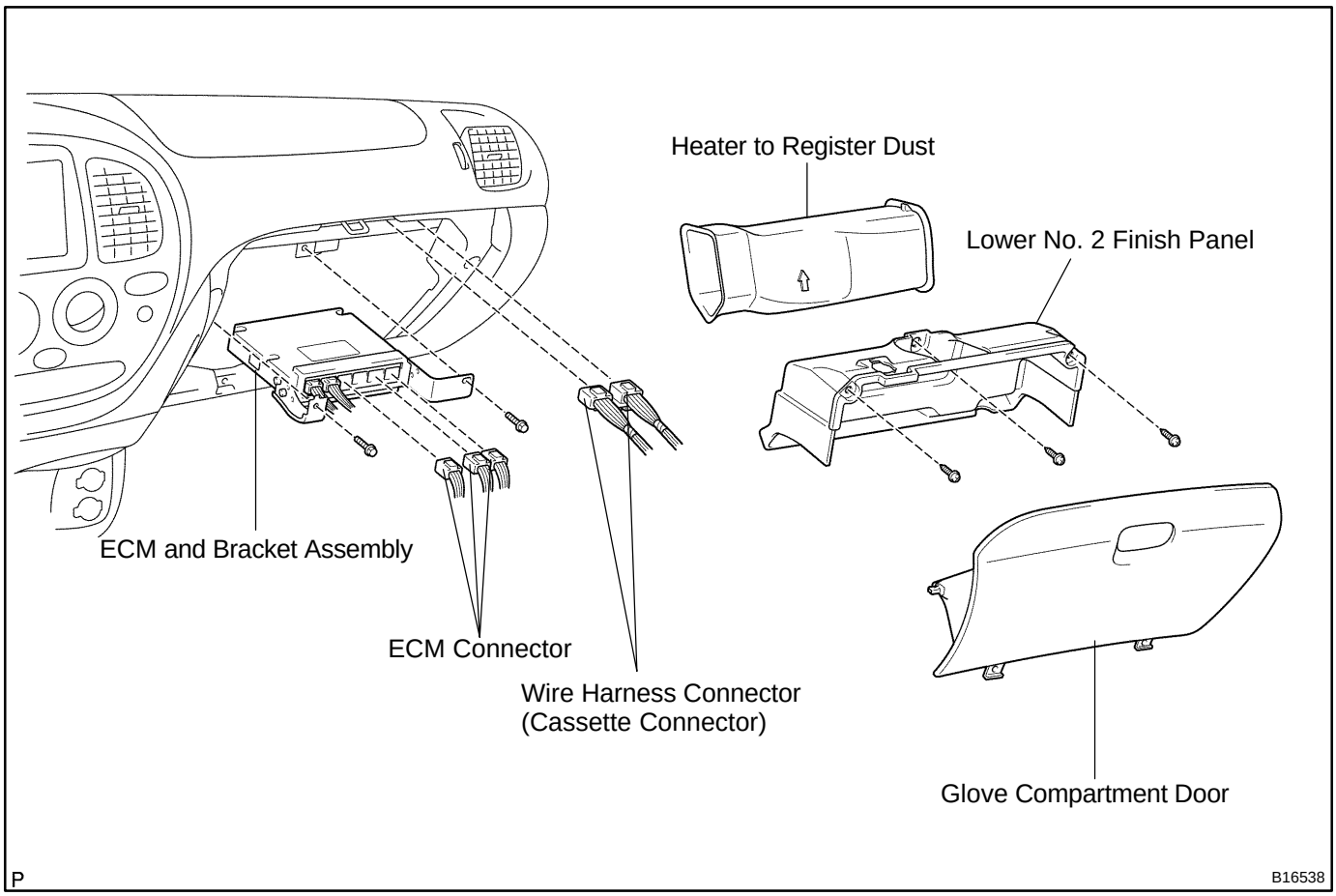
Heater to Register Dust
Lower No. 2 Finish Panel
ECM and Bracket Assembly
ECM Connector
Wire Harness Connector
(Cassette Connector)
Glove Compartment Door
P
B16538

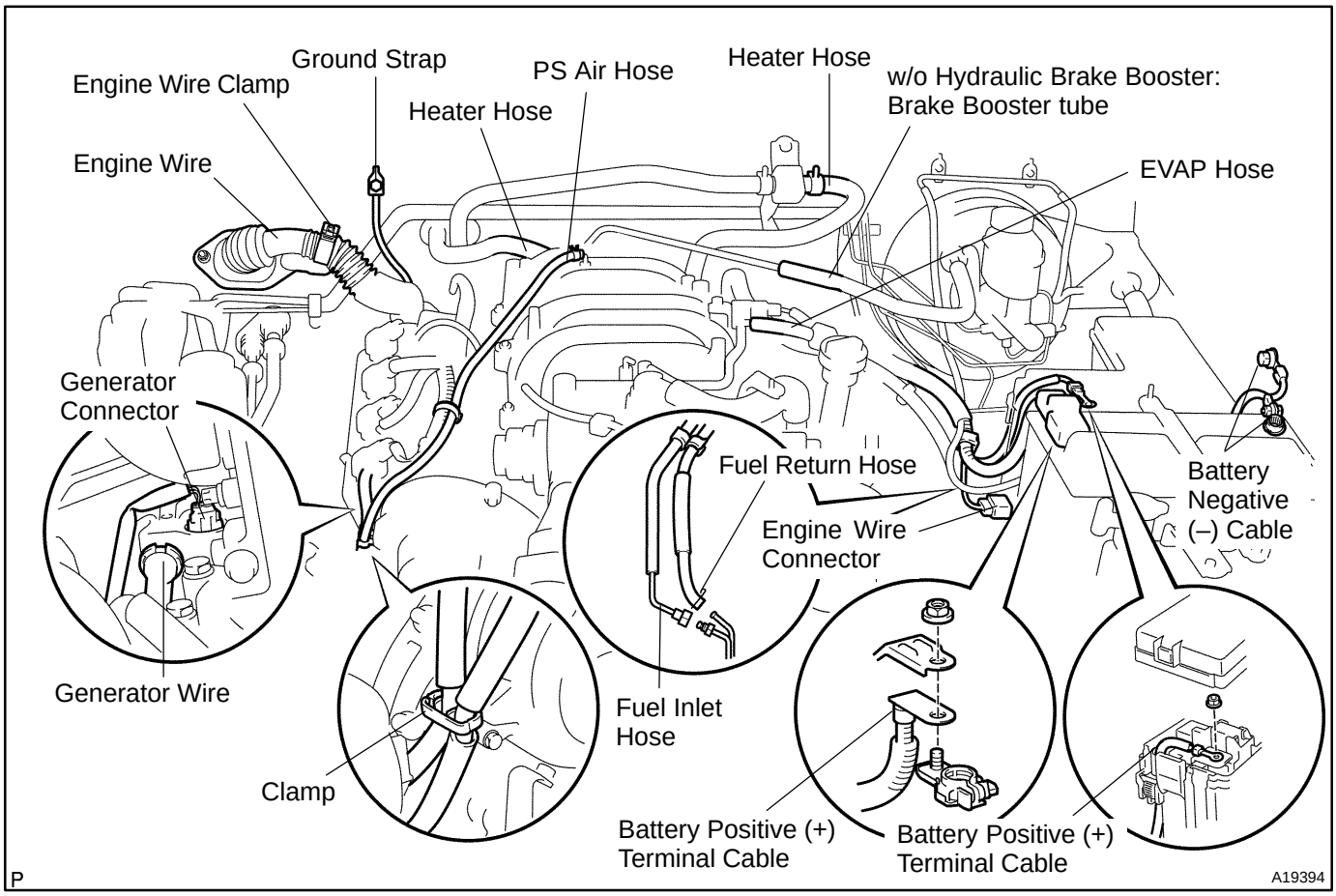
Ground Strap
Engine Wire Clamp
PS Air Hose
Heater Hose
Heater Hose
w/o Hydraulic Brake Booster:
Brake Booster tube
Engine Wire
EVAP Hose
Generator
Connector
Fuel Return Hose
Battery
Negative
(–) Cable
Engine Wire
Connector
Generator Wire
Fuel Inlet
Hose
Clamp
Battery Positive (+)
Terminal Cable
Battery Positive (+)
Terminal Cable
P
A19394

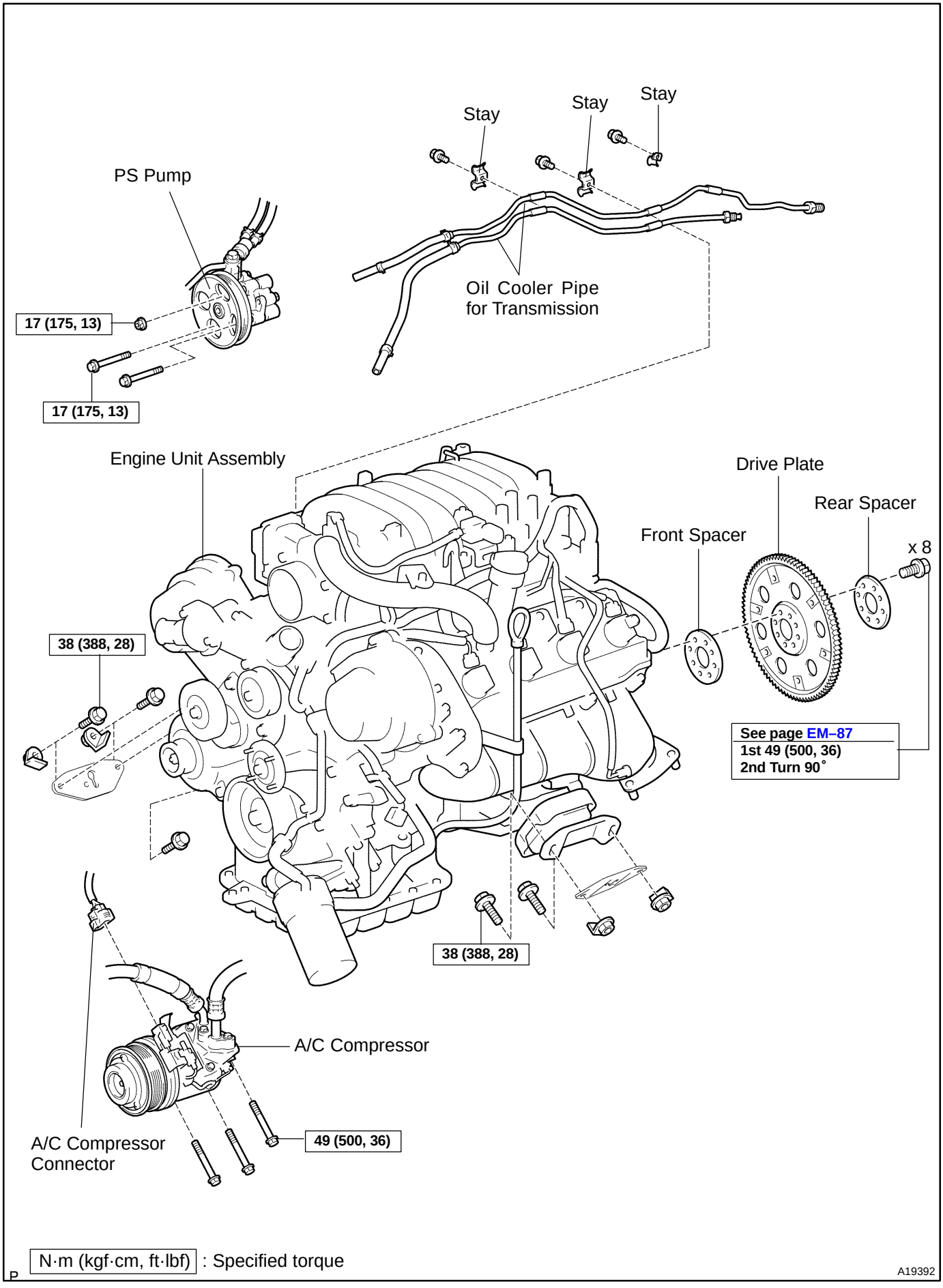
Stay
Stay
Stay
PS Pump
Oil Cooler Pipe
for Transmission
17 (175, 13)
17 (175, 13)
Engine Unit Assembly
Drive Plate
Rear Spacer
Front Spacer
x 8
38 (388, 28)
See page EM–87
1st 49 (500, 36)
2nd Turn 90°
38 (388, 28)
A/C Compressor
A/C Compressor
Connector
49 (500, 36)
N·m (kgf·cm, ft·lbf) : Specified torque
A19392

EM11X–05

REMOVAL

1. **REMOVE FRONT EXHAUST PIPES (See page EM–117)**
2. **REMOVE FRONT AND REAR PROPELLER SHAFTS (See page PR–10)**
3. **REMOVE FRONT STABILIZER BAR (See page SA–80)**
4. **REMOVE TRANSMISSION (See page AT–35)**
5. **REMOVE ENGINE HOOD**
6. **REMOVE ENGINE UNDER COVER**
7. **DRAIN ENGINE COOLANT**
8. **REMOVE RADIATOR ASSEMBLY (See page CO–18)**
9. **REMOVE THROTTLE BODY COVER**
10. **REMOVE AIR CLEANER AND INTAKE AIR CONNECTOR ASSEMBLY**

(a) Disconnect the MAF meter connector.
(b) Loosen the 3 bolts, and remove the air cleaner case.
(c) Remove the A/C suction hose from the intake air connector.
(d) Disconnect the PS air hose, air inlet hose for EVAP, PCV hose and MAF meter wire from the air intake connector.
(e) Disconnect the intake air connector from the throttle body.

11. **DISCONNECT BATTERY CABLES**

(a) Disconnect the clamp on battery negative (–) cable from the No. 2 relay box.
(b) Disconnect the battery positive (+) terminal cable.
(c) Disconnect the battery negative (–) cable from the left fender apron.

12. **REMOVE DRIVE BELT, FAN, FLUID COUPLING AND FAN PULLEY**

(a) Loosen the 4 nuts holding the fluid coupling to the fan bracket.
(b) Remove the drive belt (See page CH–7 or CH–19).
(c) Remove the 4 nuts, the fan, fluid coupling assembly and fan pulley.

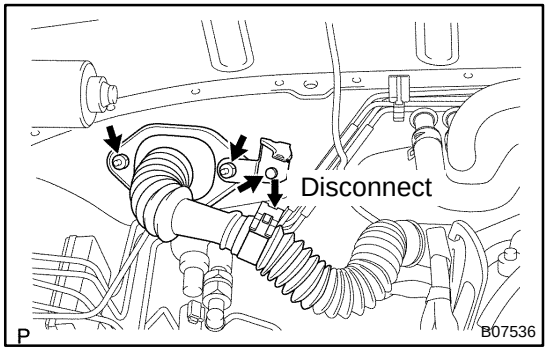

13. **DISCONNECT ENGINE WIRE FROM CABIN**

(a) Remove the glove compartment door.
(b) Remove the lower No. 2 panel.
(c) Remove the 3 screws, and disconnect the ECM from the body bracket.
(d) Disconnect the 3 wire harness connectors from the ECM.
(e) Disconnect the 2 wire harness connectors (cassette connector).
(f) Disconnect the engine wire from the engine wire bracket and remove the 2 nuts, bolt and bracket.

(g) Pull out the engine wire from the cowl panel.

14. DISCONNECT HOSES, WIRES, CONNECTORS, CLAMPS, GROMMET AND CABLES

(a) Disconnect the accelerator cable from the engine.
(b) Disconnect the 2 PS air hoses from hose clamp on the No. 3 RH timing belt cover.
(c) Disconnect the generator wire.
(d) Disconnect the generator connector.
(e) Disconnect the hose clamp for the PS air hose.
(f) Disconnect the PS air hose from the upper intake manifold.
(g) Disconnect the 2 heater hoses.
(h) Disconnect the ground strap from the cowl panel.
(i) Disconnect the fuel inlet hose and clamps.
(j) Disconnect the fuel return hose and clamp.
(k) Disconnect the air inlet hose from the charcoal canister.
(l) Disconnect the EVAP hose from the VSV for EVAP.
(m) w/o Hydraulic brake booster:
Disconnect the brake booster tube.

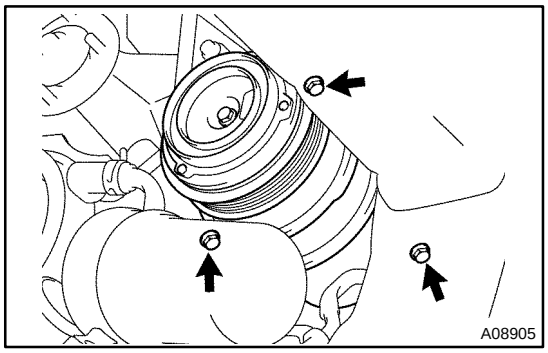

15. DISCONNECT A/C COMPRESSOR FROM ENGINE

(a) Disconnect the A/C compressor connector.
(b) Remove the 3 bolts, and disconnect the A/C compressor from the engine.

HINT:
Suspend the A/C compressor securely.

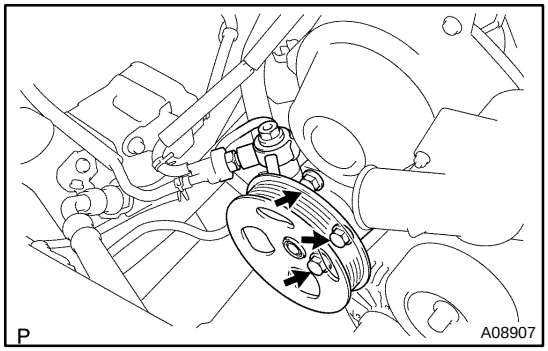

16. DISCONNECT PS PUMP FROM ENGINE

Remove the 3 bolts, and disconnect the PS pump from the engine.

HINT:
Suspend the PS pump securely.

17. REMOVE OIL COOLER PIPES FOR TRANSMISSION

(a) Remove the 3 bolts and 3 stays.
(b) Loosen the 2 union nuts, and remove the 2 oil cooler pipes.

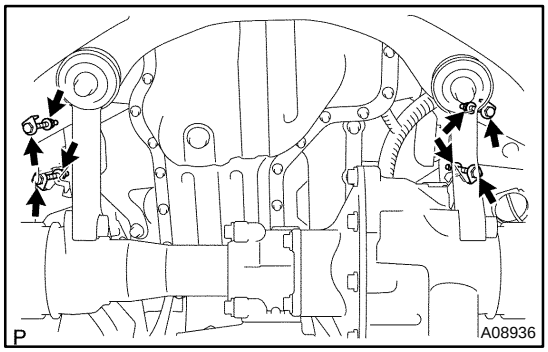

18. REMOVE ENGINE ASSEMBLY FROM VEHICLE

(a) Attach the engine chain hoist to the engine hangers.
(b) Remove the 4 bolts holding the engine mounting brackets to the frame brackets.

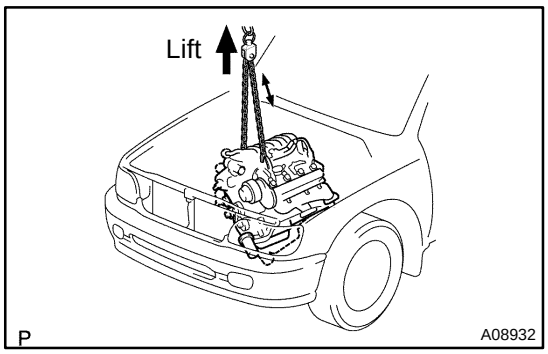

(c) Lift the engine out of the vehicle slowly and carefully.

HINT:

Make sure the engine is clear of all wiring, hoses and cables.

(d) Place the engine and transmission assembly onto the stand.

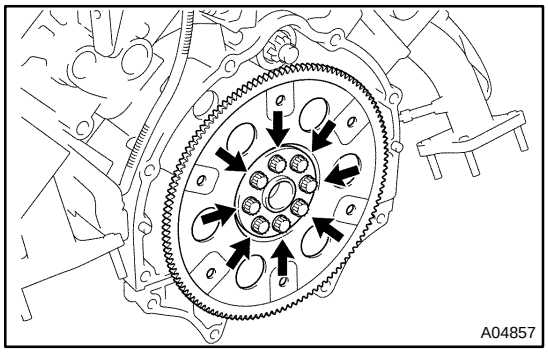

19. REMOVE DRIVE PLATE

Remove the 8 bolts, front spacer, drive plate and rear spacer.

EM11Y–05

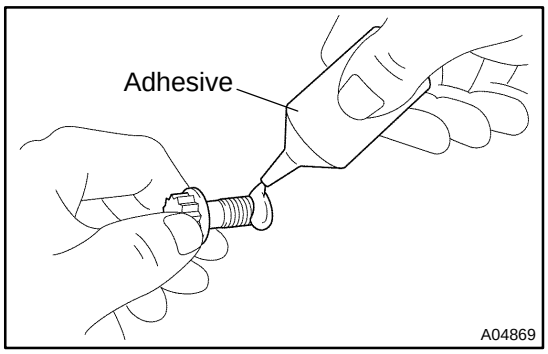

INSTALLATION

1. INSTALL DRIVE PLATE

HINT:

- ▲ The mounting bolts are tightened in 2 progressive steps (steps (c) and (e)).
- ▲ If any one of the mounting bolts is broken or deformed, replace it.

(a) Apply adhesive to 2 or 3 threads of the mounting bolt end.
Adhesive:
Part No. 08833–00070, THREE BOND 1324 or equivalent

(b) Install the front spacer, drive plate and rear spacer on the crankshaft.

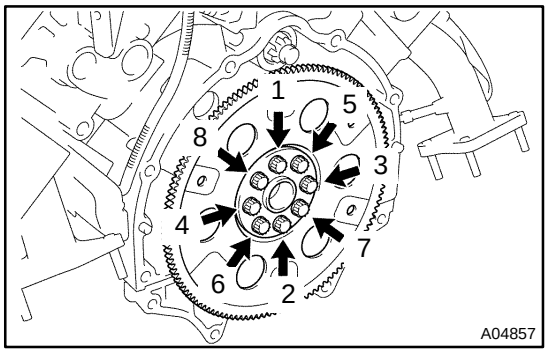

(c) Install and uniformly tighten the 8 mounting bolts in several passes, in the sequence shown.
Torque: 49 N·m (500 kgf·cm, 36 ft·lbf)

If any one of the mounting bolts does not meet the torque specification, replace the mounting bolt.

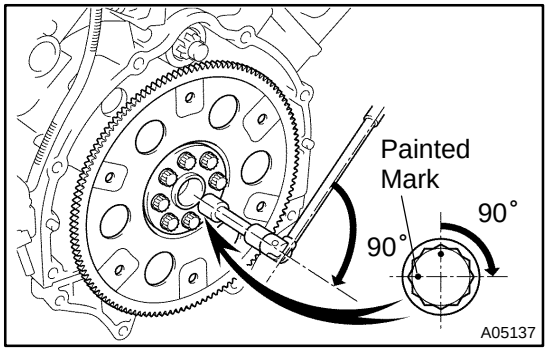

(d) Mark the mounting bolt with paint.
(e) Retighten the mounting bolts by 90° in the numerical order shown.
(f) Check that the painted mark is now at a 90° angle to (e).

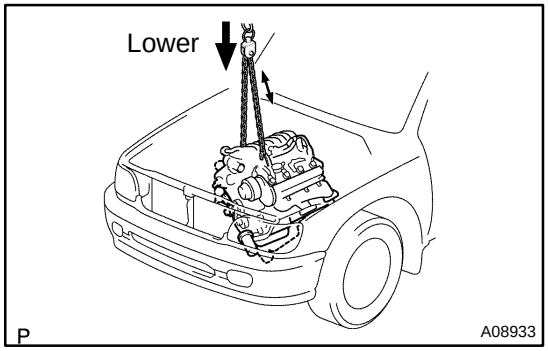

2. INSTALL ENGINE ASSEMBLY IN VEHICLE

(a) Attach the engine chain hoist to the engine hangers.
(b) Slowly lower the engine assembly into the engine compartment.
(c) Attach the engine mounting brackets to the frame brackets.

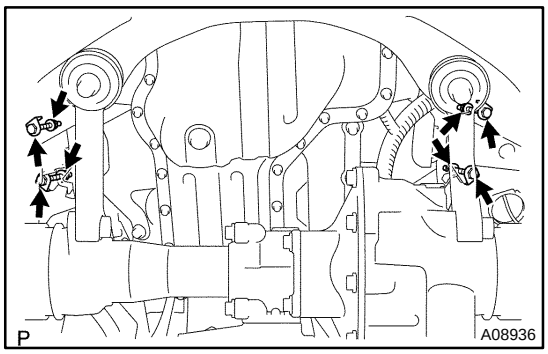

(d) Install the engine mounting brackets to the frame brackets with the 2 nuts and 4 bolts.
Torque: 38 N·m (388 kgf·cm, 28 ft·lbf)
(e) Remove the engine chain hoist.

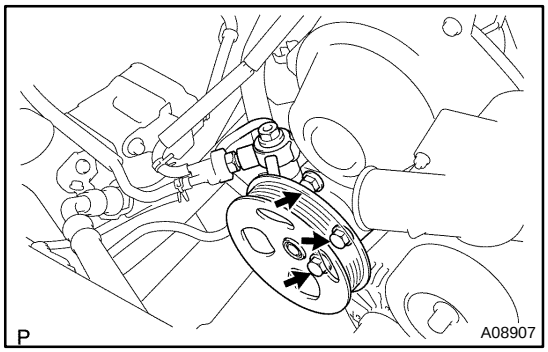

3. INSTALL PS PUMP
Install the PS pump with the 3 bolts.
Torque: 17 N·m (175 kgf·cm, 13 ft·lbf)

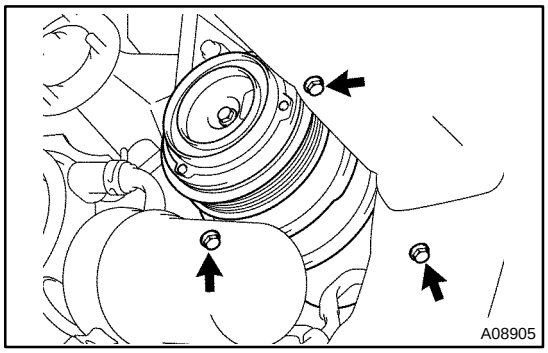

4. INSTALL A/C COMPRESSOR
(a) Install the A/C compressor with the 3 bolts.
Torque: 49 N·m (500 kgf·cm, 36 ft·lbf)
(b) Connect the A/C compressor connector.
5. CONNECT HOSES, WIRES, CONNECTORS, CLAMPS, GROMMET AND CABLES
(a) Connect the accelerator cable to the engine.
(b) Connect the 2 PS air hoses to hose clamp on the No.3 RH timing belt cover.
(c) Connect the generator wire.
(d) Connect the generator connector.
(e) Connect the hose clamp for the PS air hose.
(f) Connect the PS air hose to the upper intake manifold.
(g) Connect the 2 heater hoses.
(h) Connect the ground strap to the cowl panel.
(i) Connect the fuel inlet hose and clamps.
(j) Connect the fuel return hose and clamp.
(k) Connect the air inlet hose to the charcoal canister.
(l) Connect the EVAP hose to the VSV for EVAP.
(m) w/o Hydraulic brake booster:
Connect the brake booster tube.

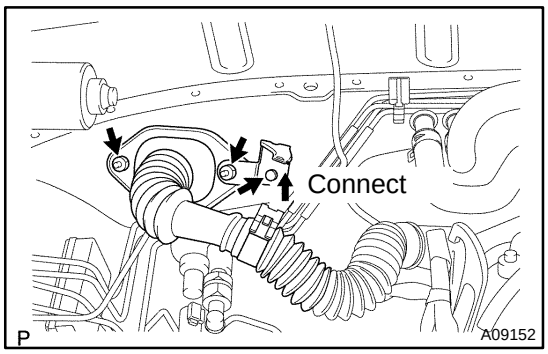

6. CONNECT ENGINE WIRE TO CABIN

(a) Push into the engine wire through the cowl panel.
(b) Install the engine wire bracket with the 2 nuts and bolt and connect the engine wire to the bracket.
(c) Connect the 3 connectors to the ECM.
(d) Connect the 2 wire harness connectors (cassette connector).
(e) Install the ECM with the 3 screws.
(f) Install the lower No. 2 panel.
(g) Install the glove compartment door.

7. INSTALL FAN PULLEY, FAN, FLUID COUPLING AND DRIVE BELT

(a) Temporarily install the fan pulley, the fan and fluid coupling assembly with the 4 nuts.
(b) Install the drive belt (See page CH–16 or CH–28).
(c) Tighten the 4 nuts holding the coupling to the fan bracket.

8. INSTALL BATTERY CABLES

(a) Connect the battery positive (+) terminal cable.
(b) Connect the battery negative (–) cable to the battery and left fender apron.
(c) Connect the clamp on battery negative (–) cable to No. 2 relay box.

9. INSTALL AIR CLEANER AND INTAKE AIR CONNECTOR PIPE ASSEMBLY

(a) Install the air cleaner case with the 3 bolts.
Torque: 5 N·m (51 kgf·cm, 44 in.·lbf)
(b) Connect the intake air connector to the throttle body.
(c) Connect the MAF meter connector.
(d) Install the A/C suction hose to the intake air connector.
(e) Connect the PS air hose, air inlet hose for EVAP, PCV hose and MAF meter connector to the intake air connector.

10. INSTALL THROTTLE BODY COVER
11. INSTALL TRANSMISSION (See page AT–38)
12. INSTALL RADIATOR ASSEMBLY (See page CO–23)
13. INSTALL FRONT STABILIZER BAR (See page SA–82)
14. INSTALL FRONT AND REAR PROPELLER SHAFTS (See page PR–15)
15. INSTALL FRONT EXHAUST PIPES (See page EM–117)
16. FILL WITH ENGINE COOLANT (See page CO–2)
17. FILL WITH ENGINE OIL (See page LU–2)
18. START ENGINE AND CHECK FOR LEAKS
19. INSTALL ENGINE UNDER COVERS
20. INSTALL HOOD
21. PERFORM ROAD TEST

Check for abnormal noise, shock, slippage, correct shift points and smooth operation.

22. RECHECK ENGINE COOLANT AND OIL LEVELS

CYLINDER BLOCK

COMPONENTS

EM0E9–06

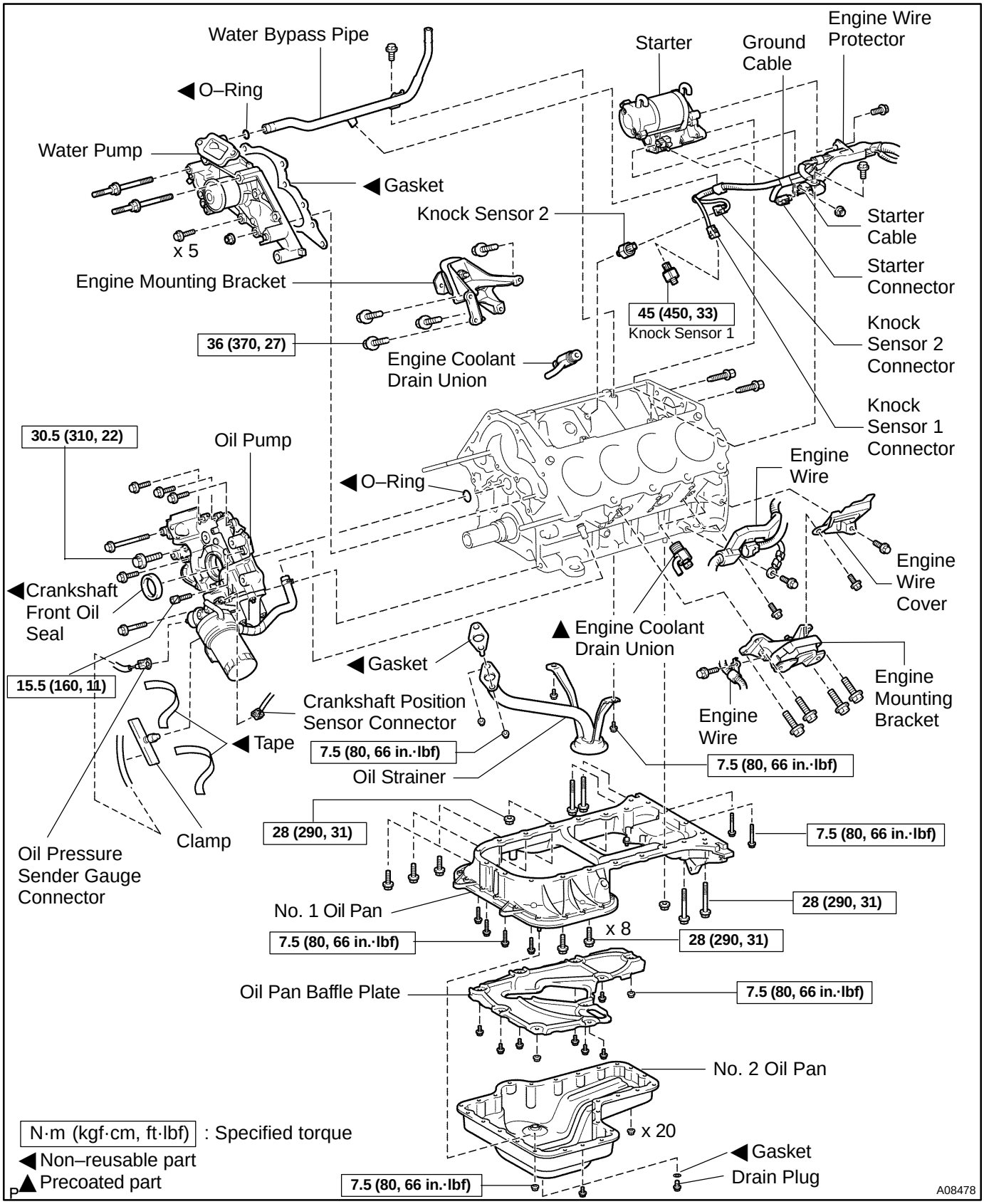

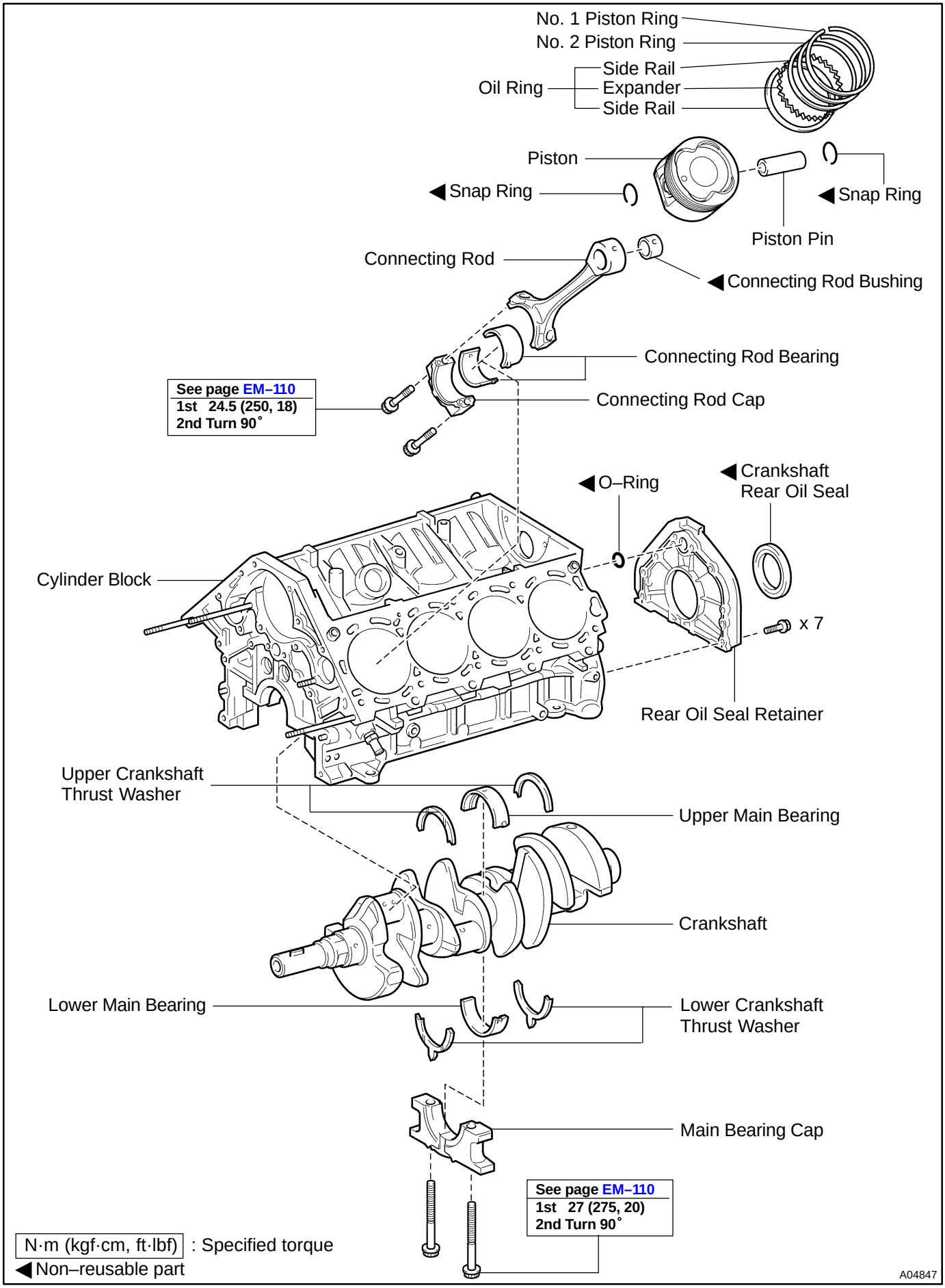
No. 1 Piston Ring
No. 2 Piston Ring
Oil Ring
Side Rail
Expander
Side Rail
Piston
◀ Snap Ring
◀ Snap Ring
Piston Pin
Connecting Rod
◀ Connecting Rod Bushing
Connecting Rod Bearing
See page EM–110
1st 24.5 (250, 18)
2nd Turn 90°
Connecting Rod Cap
◀ O–Ring
◀ Crankshaft
Rear Oil Seal
Cylinder Block
x 7
Rear Oil Seal Retainer
Upper Crankshaft
Thrust Washer
Upper Main Bearing
Crankshaft
Lower Main Bearing
Lower Crankshaft
Thrust Washer
Main Bearing Cap
See page EM–110
1st 27 (275, 20)
2nd Turn 90°
N·m (kgf·cm, ft·lbf) : Specified torque
◀ Non–reusable part
A04847

EM122–02

DISASSEMBLY

1. **INSTALL ENGINE TO ENGINE STAND**
2. **REMOVE TIMING BELT AND PULLEYS (See page EM–14)**
3. **REMOVE CYLINDER HEAD (See page EM–34)**

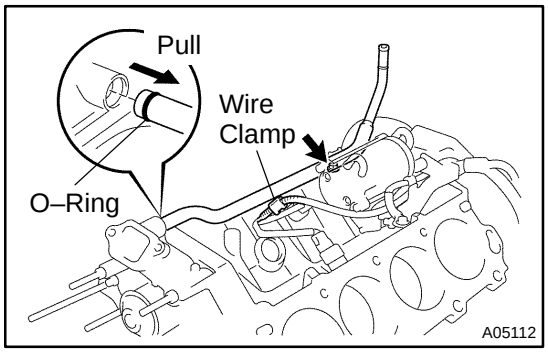

4. **REMOVE WATER BYPASS PIPE**

(a) Disconnect the wire clamp (for knock sensor 1, 2) from bracket of the water bypass pipe.
(b) Remove the bolt.
(c) Pull out the water bypass pipe from the water pump.
(d) Remove the O–ring from the water bypass pipe.

5. **REMOVE STARTER (See page ST–6)**
6. **REMOVE KNOCK SENSORS (See page SF–49)**

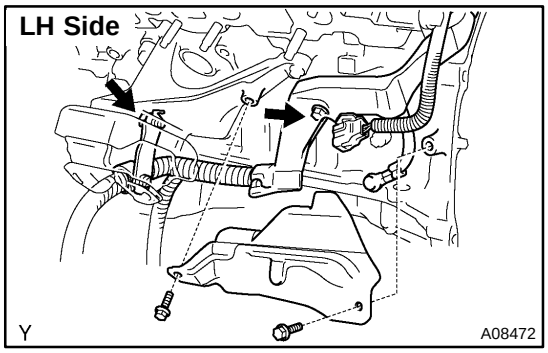

7. **DISCONNECT ENGINE WIRE FROM LH SIDE OF CYLINDER BLOCK**

(a) Remove the 2 bolts and engine wire cover from the LH side of the cylinder block.
(b) Remove the 2 bolts, disconnect the brackets on the engine wire from the cylinder block and engine mounting bracket.

8. **REMOVE OIL COOLER PIPE BRACKET FOR A/T**

Remove the bolt and bracket.

9. **REMOVE ENGINE MOUNTING BRACKETS**

Remove the 4 bolts and mounting bracket. Remove the 2 mounting brackets.

10. **REMOVE WATER PUMP (See page CO–6)**
11. **REMOVE NO. 2 OIL PAN (See page LU–8)**
12. **REMOVE OIL PAN BAFFLE PLATE**
13. **REMOVE NO. 1 OIL PAN (See page LU–8)**
14. **REMOVE OIL STRAINER**
15. **REMOVE OIL PUMP (See page LU–8)**
16. **REMOVE ENGINE COOLANT DRAIN UNIONS**

Remove the 2 drain unions.

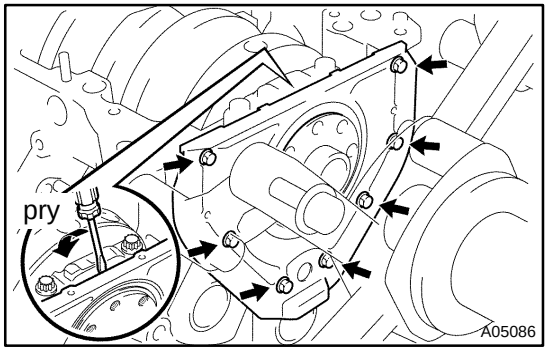

17. **REMOVE REAR OIL SEAL RETAINER**

(a) Remove the 7 bolts.
(b) Using a screwdriver, remove the oil seal retainer by prying the portion between the oil seal retainer and main bearing cap.
(c) Remove the O–ring.

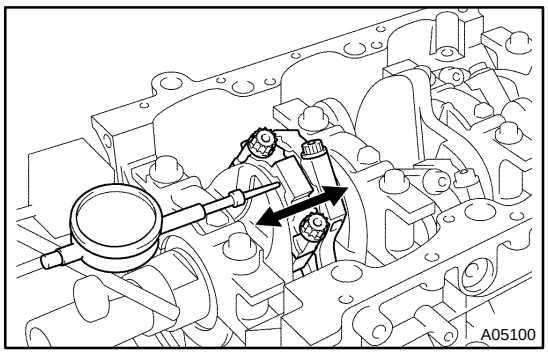

18. CHECK CONNECTING ROD THRUST CLEARANCE

Using a dial indicator, measure the thrust clearance while moving the connecting rod back an forth.

Standard thrust clearance:
0.160 – 0.290 mm (0.0063 – 0.0138 in.)
Maximum thrust clearance: 0.35 mm (0.0138 in.)

If the thrust clearance is greater than maximum, replace the connecting rod assembly(s). If necessary, replace the crankshaft.

Connecting rod thickness:
22.880 – 22.920 mm (0.9008 – 0.9024 in.)

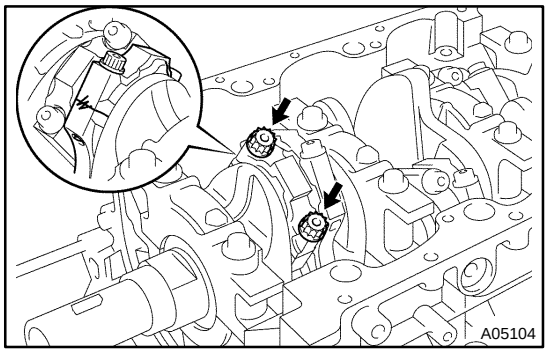

19. REMOVE CONNECTING ROD CAPS AND CHECK OIL CLEARANCE

(a) Check the matchmarks on the connecting rod and see it cap to ensure correct reassembly.
(b) Remove the 2 connecting rod cap bolts.

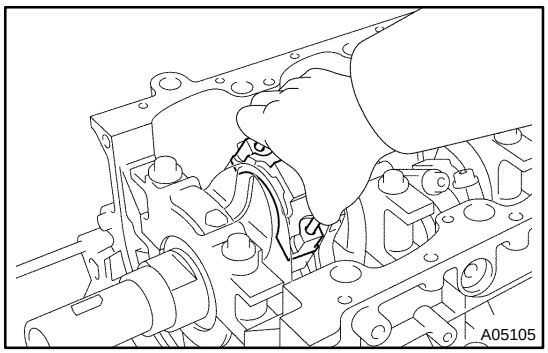

(c) Using the 2 removed connecting rod cap bolts, remove the connecting rod cap and lower bearing by wiggling the connecting rod cap right and left.

HINT:

Keep the lower bearing inserted with the connecting rod cap.

(d) Clean the crank pin and bearing.
(e) Check the crank pin and bearing for peeling and scratches.

If the crank pin or bearing is damaged, replace the bearings. If necessary, replace the crankshaft.

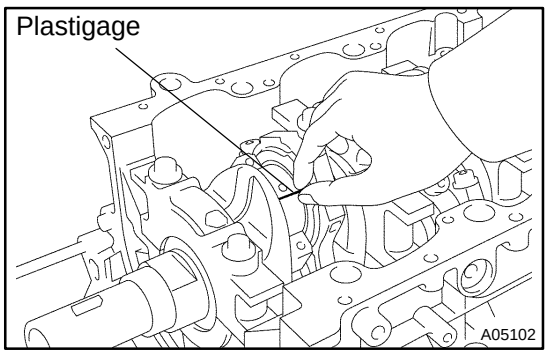

(f) Lay a strip of Plastigage across the crank pin.

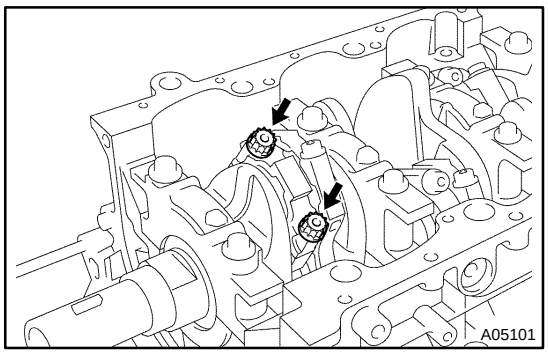

(g) Install the connecting rod cap with the 2 bolts (See page EM–110).

NOTICE:

Do not turn the crankshaft.

(h) Remove the 2 bolts, connecting rod cap and lower bearing (See procedure (b) and (c) above).

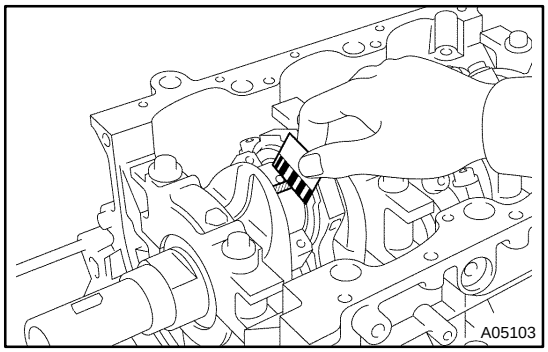

(i) Measure the Plastigage at its widest point.

Standard oil clearance:

0.027 – 0.053 mm (0.0011 – 0.0021 in.)

Maximum oil clearance: 0.065 mm (0.0026 in.)

If the oil clearance is greater than maximum, replace the bearings. If necessary, replace the crankshaft.

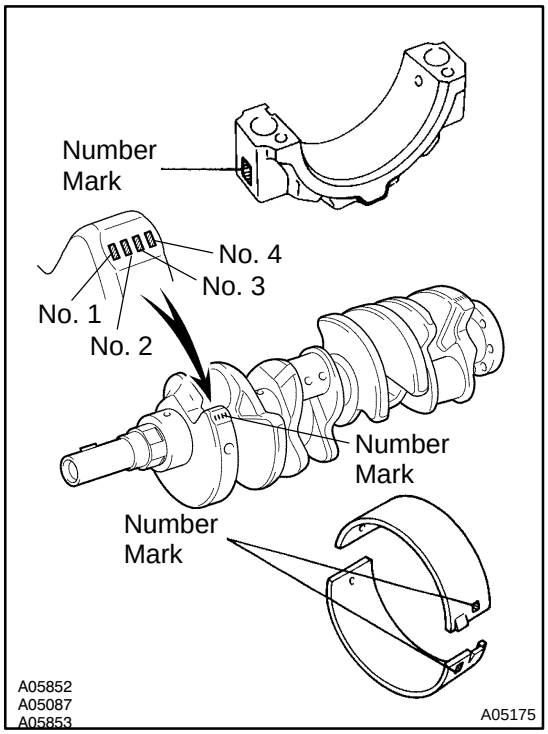

HINT:

If using a standard bearing, replace it with one having the same number. If the number of the bearing cannot be determined, select the correct bearing by adding together the numbers imprinted on the connecting rod cap and crankshaft, then selecting the bearing with the same number as the total. There are 6 sizes of standard bearings, marked 2, 3, 4, 5, 6 and 7.

	Number mark											
Connecting rod cap	1	1	2	1	2	3	2	3	4	3	4	4
Crankshaft	1	2	1	3	2	1	3	2	1	3	2	3
Use bearing	2	3		4			5			6		7

EXAMPLE:

Connecting rod cap ”3” + Crankshaft ”1”
= Total number 4 (Use bearing ”4”)

Reference

Connecting rod big end inside diameter:

Mark 1	55.000 – 55.006 mm (2.1654 – 2.1656 in.)
Mark 2	55.006 – 55.012 mm (2.1656 – 2.1658 in.)
Mark 3	55.012 – 55.018 mm (2.1658 – 2.1661 in.)
Mark 4	55.018 – 55.024 mm (2.1661 – 2.1663 in.)

Crankshaft crank pin diameter:

Mark 1	51.994 – 52.000 mm (2.0470 – 2.0472 in.)
Mark 2	51.988 – 51.994 mm (2.0468 – 2.0470 in.)
Mark 3	51.982 – 51.988 mm (2.0465 – 2.0468 in.)

Standard sized bearing center wall thickness:

Mark 2	1.484 – 1.487 mm (0.0584 – 0.0585 in.)
Mark 3	1.487 – 1.490 mm (0.0585 – 0.0587 in.)

Mark 4	1.490 – 1.493 mm (0.0587 – 0.0588 in.)
Mark 5	1.493 – 1.496 mm (0.0588 – 0.0589 in.)
Mark 6	1.496 – 1.499 mm (0.0589 – 0.0590 in.)
Mark 7	1.499 – 1.502 mm (0.0590 – 0.0591 in.)

(j) Completely remove the Plastigage.

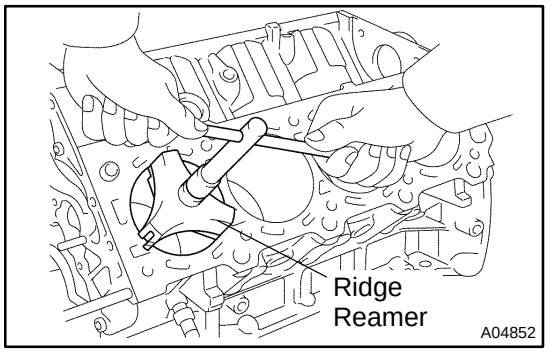

20. REMOVE PISTON AND CONNECTING ROD ASSEMBLIES

(a) Using a ridge reamer, remove all the carbon from the top of the cylinder.

(b) Push the piston, connecting rod assembly and upper bearing through the top of the cylinder block.

HINT:

- ▲ Keep the bearings, connecting rod and cap together.
- ▲ Arrange the piston and connecting rod assemblies in correct order.

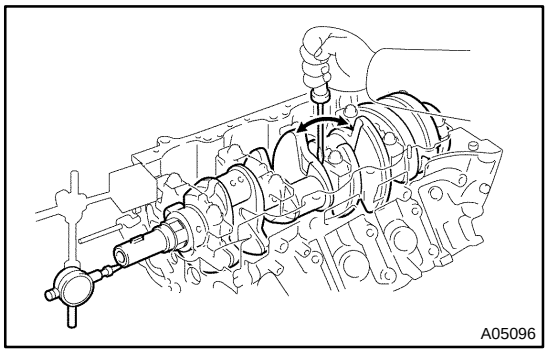

21. CHECK CRANKSHAFT THRUST CLEARANCE

Using a dial indicator, measure the thrust clearance while prying the crankshaft back and forth with a screwdriver.

Standard thrust clearance:
0.020 – 0.220 mm (0.0008 – 0.0087 in.)
Maximum thrust clearance: 0.30 mm (0.0118 in.)

If the thrust clearance is greater than maximum, replace the thrust washers as a set.

Thrust washer thickness:
2.440 – 2.490 mm (0.0961 – 0.0980 in.)

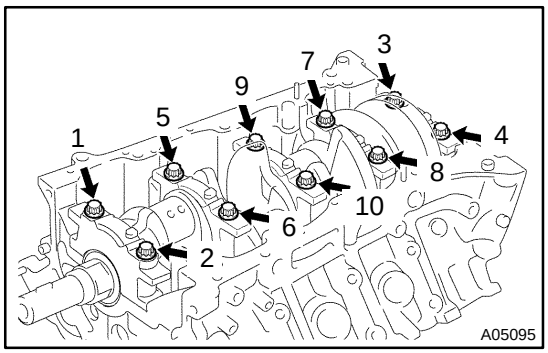

22. REMOVE MAIN BEARING CAPS AND CHECK OIL CLEARANCE

(a) Uniformly loosen and remove the 10 main bearing cap bolts in several passes, in the sequence shown.

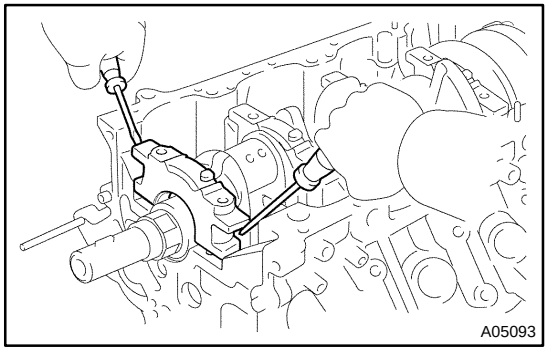

(b) Using 2 screwdrivers, pry out the main bearing cap, and remove the 5 main bearing caps, 5 lower bearings and 2 lower thrust washers (No. 3 main bearing cap only).

NOTICE:

Be careful not to damage the cylinder block.

HINT:

- ▲ Keep the lower bearing and main bearing cap together.
- ▲ Arrange the main bearing caps and lower thrust washers in correct order.

(c) Lift out the crankshaft.

HINT:
Keep the upper bearings and upper thrust washers together with the cylinder block.

(d) Clean each main journal and bearing.

(e) Check each main journal and bearing for peelings and scratches.

If the journal or bearing is damaged, replace the bearings. If necessary, replace the crankshaft.

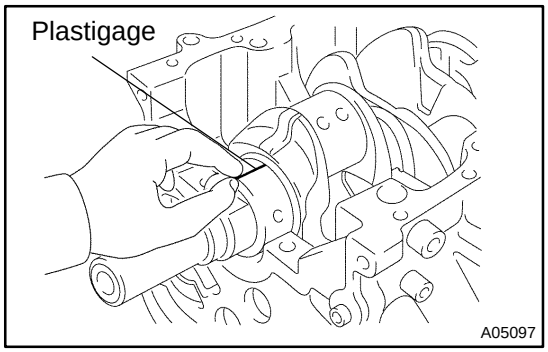

(f) Place the crankshaft on the cylinder block.

(g) Lay a strip of Plastigage across each journal.

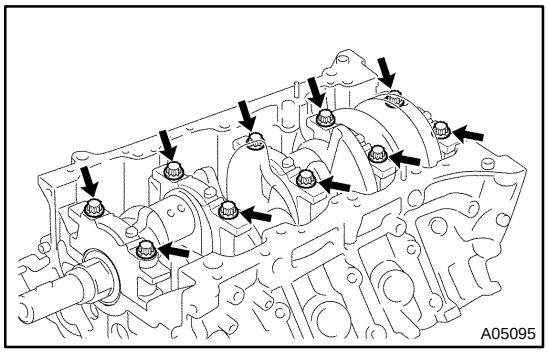

(h) Install the main bearing caps (See page EM–110).

NOTICE:

Do not turn the crankshaft.

(i) Remove the main bearing caps (See procedure (a) and (b) above).

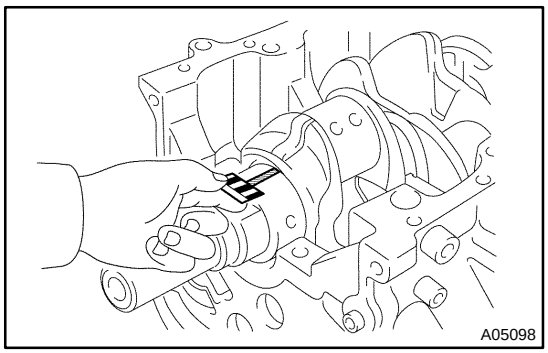

(j) Measure the Plastigage at its widest point.

Standard clearance:
No. 1, No. 5
0.028 – 0.046 mm (0.0011 – 0.0018 in.)
Others
0.040 – 0.058 mm (0.0016 – 0.0023 in.)
Maximum clearance: 0.070 mm (0.0028 in.)

If the oil clearance is greater than maximum, replace the bearings. If necessary, replace the crankshaft.

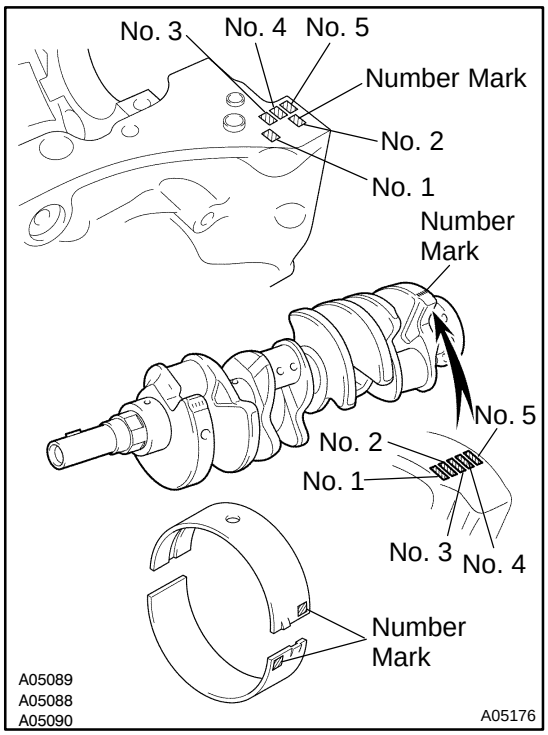

HINT:

If using a standard bearing, replace it with one having the same number. If the number of the bearing cannot be determined, select the correct bearing by adding together the numbers imprinted on the cylinder block and crankshaft, then refer to the table below for the appropriate bearing number. There are 5 sizes of the standard bearings. For No.1 and No.5 position bearings, use bearings marked 3, 4, 5, 6 and 7. For others position bearings, use bearings marked 1, 2, 3, 4 and 5.

No. 1, No. 5

	Mark	Use bearing
Cylinder block (A) + Crankshaft (B)	0 – 5	3
	6 – 11	4
	12 – 17	5
	18 – 23	6
	24 – 28	7

EXAMPLE:
Cylinder block ”08” + Crankshaft ”06”
= Total number 14 (Use bearing ”5”)

Others

	Mark	Use bearing
Cylinder block (A) + Crankshaft (B)	0 – 5	1
	6 – 11	2
	12 – 17	3
	18 – 23	4
	24 – 28	5

EXAMPLE:
Cylinder block ”08” + Crankshaft ”06”
= Total number 14 (Use bearing ”3”)

Reference

Cylinder block main journal bore diameter (A):

Mark 00	72.000 mm (2.8346 in.)
Mark 01	72.001 mm (2.8347 in.)
Mark 02	72.002 mm (2.8347 in.)
Mark 03	72.003 mm (2.8348 in.)
Mark 04	72.004 mm (2.8348 in.)
Mark 05	72.005 mm (2.8348 in.)
Mark 06	72.006 mm (2.8349 in.)
Mark 07	72.007 mm (2.8349 in.)
Mark 08	72.008 mm (2.8350 in.)
Mark 09	72.009 mm (2.8350 in.)
Mark 10	72.010 mm (2.8350 in.)
Mark 11	72.011 mm (2.8351 in.)
Mark 12	72.012 mm (2.8351 in.)
Mark 13	72.013 mm (2.8352 in.)
Mark 14	72.014 mm (2.8352 in.)
Mark 15	72.015 mm (2.8352 in.)
Mark 16	72.016 mm (2.8353 in.)

Crankshaft main journal diameter (B):

Mark 00	67.000 mm (2.6378 in.)
Mark 01	66.999 mm (2.6378 in.)
Mark 02	66.998 mm (2.6377 in.)
Mark 03	66.997 mm (2.6377 in.)
Mark 04	66.996 mm (2.6376 in.)
Mark 05	66.995 mm (2.6376 in.)
Mark 06	66.994 mm (2.6376 in.)
Mark 07	66.993 mm (2.6375 in.)
Mark 08	66.992 mm (2.6375 in.)
Mark 09	66.991 mm (2.6374 in.)
Mark 10	66.990 mm (2.6374 in.)
Mark 11	66.989 mm (2.6374 in.)
Mark 12	66.988 mm (2.6373 in.)

Standard bearing center wall thickness:
No. 1 and No. 5

Mark 3	2.487 – 2.490 mm (0.0979 – 0.0980 in.)
Mark 4	2.490 – 2.493 mm (0.0980 – 0.0981 in.)
Mark 5	2.493 – 2.496 mm (0.0981 – 0.0983 in.)
Mark 6	2.496 – 2.499 mm (0.0983 – 0.0984 in.)
Mark 7	2.499 – 2.502 mm (0.0984 – 0.0985 in.)

Others

Mark 1	2.481 – 2.484 mm (0.0977 – 0.0978 in.)
Mark 2	2.484 – 2.487 mm (0.0978 – 0.0979 in.)
Mark 3	2.487 – 2.490 mm (0.0979 – 0.0980 in.)
Mark 4	2.490 – 2.493 mm (0.0980 – 0.0981 in.)
Mark 5	2.493 – 2.496 mm (0.0981 – 0.0983 in.)

(k) Completely remove the Plastigage.

23. REMOVE CRANKSHAFT

(a) Lift up the crankshaft.

(b) Remove the 5 upper main bearings and 2 upper thrust washers from the cylinder block.

HINT:

Arrange the main bearing caps, bearings and thrust washers in correct order.

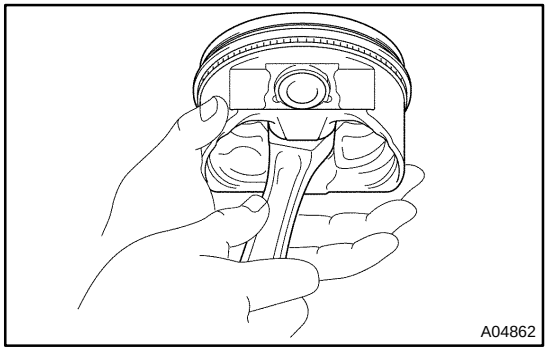

24. CHECK FIT BETWEEN PISTON AND PISTON PIN

Try to move the piston back and forth on the piston pin.

If any movement is felt, replace the piston and pin as a set.

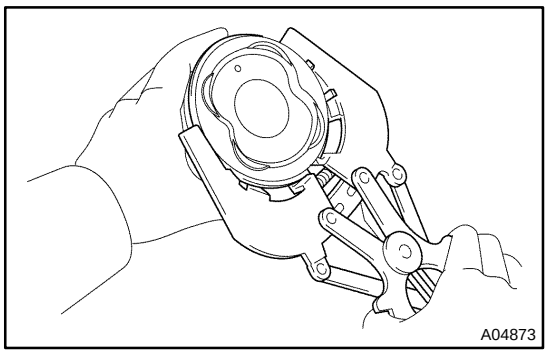

25. REMOVE PISTON RINGS

(a) Using a piston ring expander, remove the 2 compression rings.

(b) Remove the 2 side rails and oil ring by hand.

HINT:

Arrange the piston rings in correct order only.

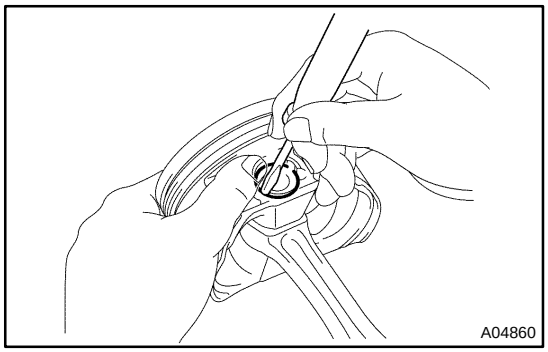

26. DISCONNECT CONNECTING ROD FROM PISTON

(a) Using a small screwdriver, pry out the 2 snap rings.

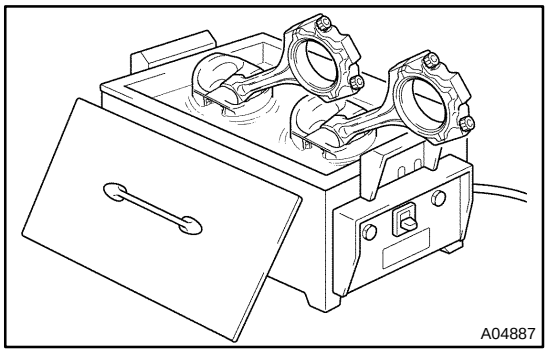

(b) Gradually heat the piston to approx. 60°C (140°F).

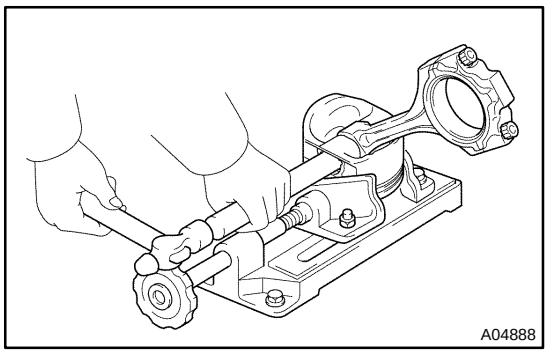

(c) Using a plastic–faced hammer and brass bar, lightly tap out the piston pin and pin and remove the connecting rod.

HINT:

- ▲ The piston and pin are a matched set.
- ▲ Arrange the pistons, pins, rings, connecting rods and bearings in correct order.

EM0EB–07

INSPECTION

1. CLEAN CYLINDER BLOCK

(a) Using a gasket scraper, remove all the gasket material from the top surface of the cylinder block.

(b) Using a soft brush and solvent, thoroughly clean the cylinder block.

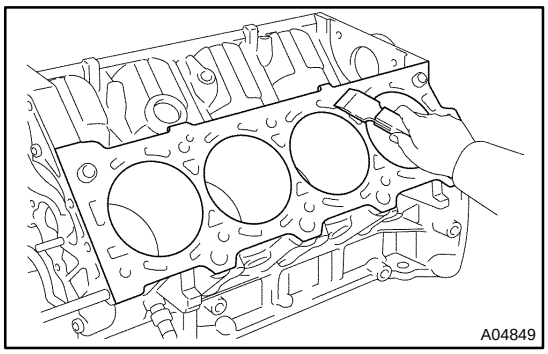

2. INSPECT CYLINDER BLOCK

(a) Inspect for flatness.

Using a precision straight edge and feeler gauge, measure the surfaces contacting the cylinder head and main bearing cap for warpage.

Maximum warpage: 0.07 mm (0.0028 in.)

If warpage is greater than maximum, replace the cylinder block.

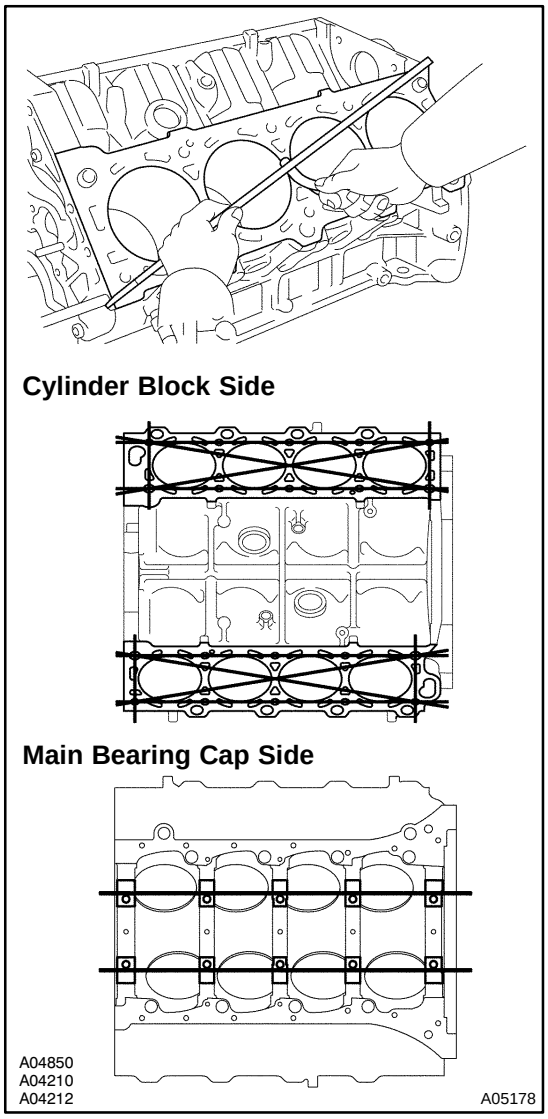

(b) Visually check the cylinder for vertical scratches.

If deep scratches are present, rebore all the 8 cylinders and replace all the 8 pistons (See page EM–107). If necessary, replace the cylinder block.

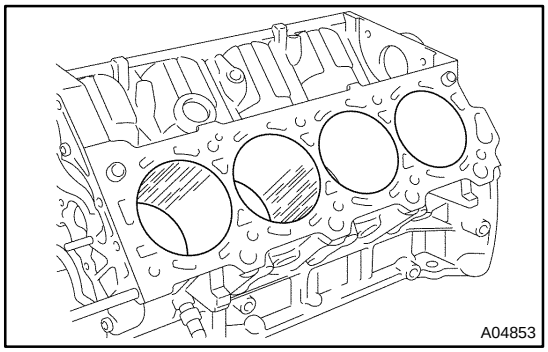

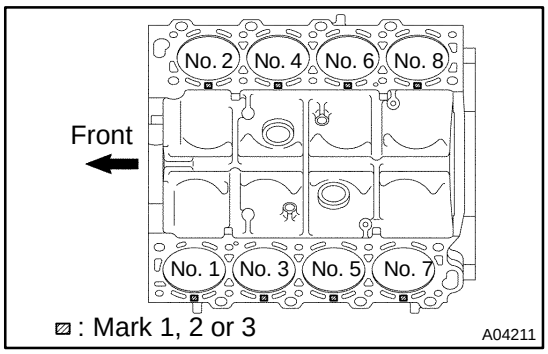

(c) Inspect the cylinder bore diameter.

HINT:

There are 3 sizes of the standard cylinder bore diameter, marked 1, 2 and 3 accordingly. The mark is stamped on the top of the cylinder block.

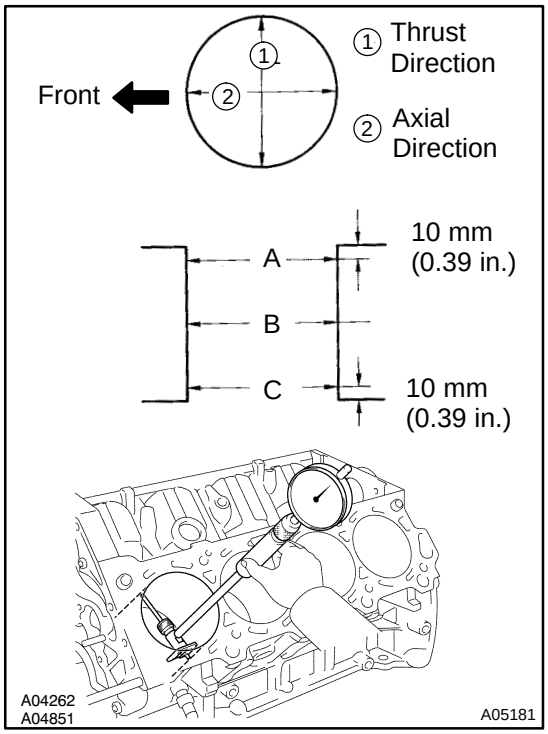

Using a cylinder gauge, measure the cylinder bore diameter at positions A, B and C in the thrust and axial directions.

Standard diameter:

STD	Mark 1	94.002 – 94.010 mm (3.7009 – 3.7012 in.)
	Mark 2	94.010 – 94.023 mm (3.7012 – 3.7017 in.)
	Mark 3	94.023 – 94.031 mm (3.7017 – 3.7020 in.)

Maximum diameter:

STD	94.231 mm (3.7099 in.)
O/S 0.50	94.731 mm (3.7296 in.)

If the diameter is greater than maximum, rebore all the 8 cylinders and replace all the 8 pistons (See page EM–107). If necessary, replace the cylinder block.

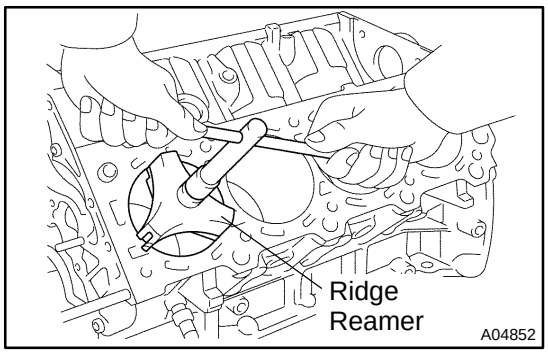

(d) Remove the cylinder ridge.

If the wear is less than 0.2 mm (0.008 in.), using a ridge reamer, grind the top of the cylinder.

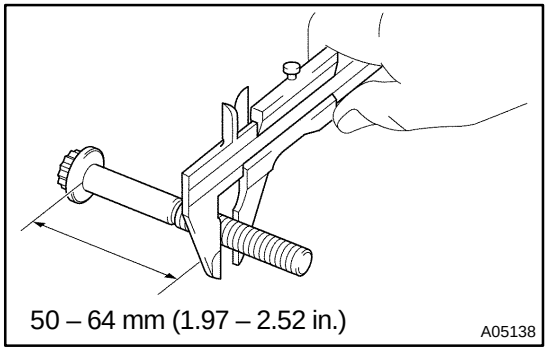

(e) Using vernier calipers, measure the thread outside diameter of the main bearing cap bolt.

Standard diameter:

10.760 – 10.970 mm (0.4236 – 0.4319 in.)

Minimum diameter: 10.40 mm (0.4094 in.)

If the diameter is less than minimum, replace the cap bolt.

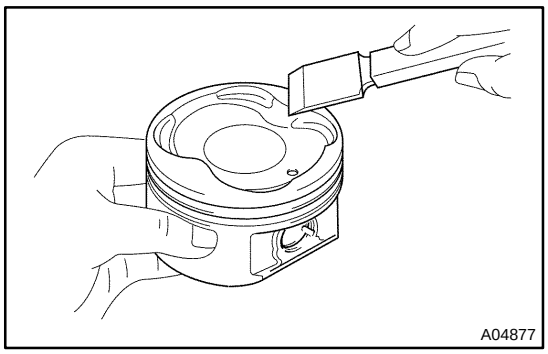

3. CLEAN PISTON

(a) Using a gasket scraper, remove the carbon from the piston top.

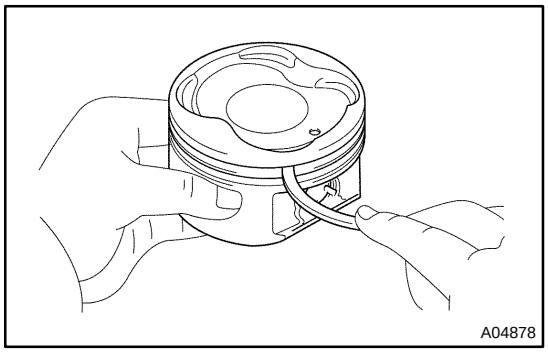

(b) Using a groove cleaning tool or broken ring, clean the piston ring grooves.

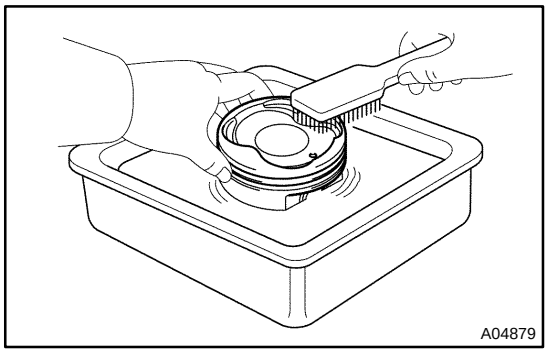

(c) Using solvent and a brush, thoroughly clean the piston.

NOTICE:

Do not use a wire brush.

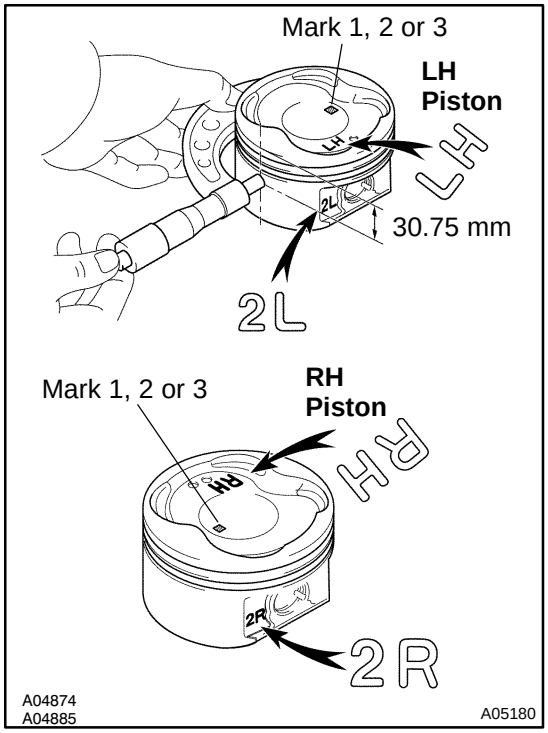

4. INSPECT PISTON AND CONNECTING ROD

(a) Inspect the piston oil clearance.

HINT:

There are 3 sizes of the standard piston diameter, marked 1, 2 and 3 accordingly. The mark is stamped on the piston top.

(1) Using a micrometer, measure the piston diameter at right angles to the piston pin center line, 30.75 mm (1.2106 in.) from the piston head.

Piston diameter:

STD	Mark 1	93.902 – 93.912 mm (3.6969 – 3.6973 in.)
	Mark 2	93.912 – 93.920 mm (3.6973 – 3.6976 in.)
	Mark 3	93.920 – 93.930 mm (3.6976 – 3.6980 in.)
O/S 0.50		94.402 – 94.430 mm (3.7166 – 3.7177 in.)

(2) Measure the cylinder bore diameter in the thrust directions (See step 2 above).

(3) Subtract the piston diameter measurement from the cylinder bore diameter measurement.

Standard oil clearance:
0.090 – 0.111 mm (0.0035 – 0.0044 in.)
Maximum oil clearance: 0.13 mm (0.0051 in.)

If the oil clearance is greater than maximum, replace all the 8 pistons and rebore all the 8 cylinders (See page EM–107). If necessary, replace the cylinder block.

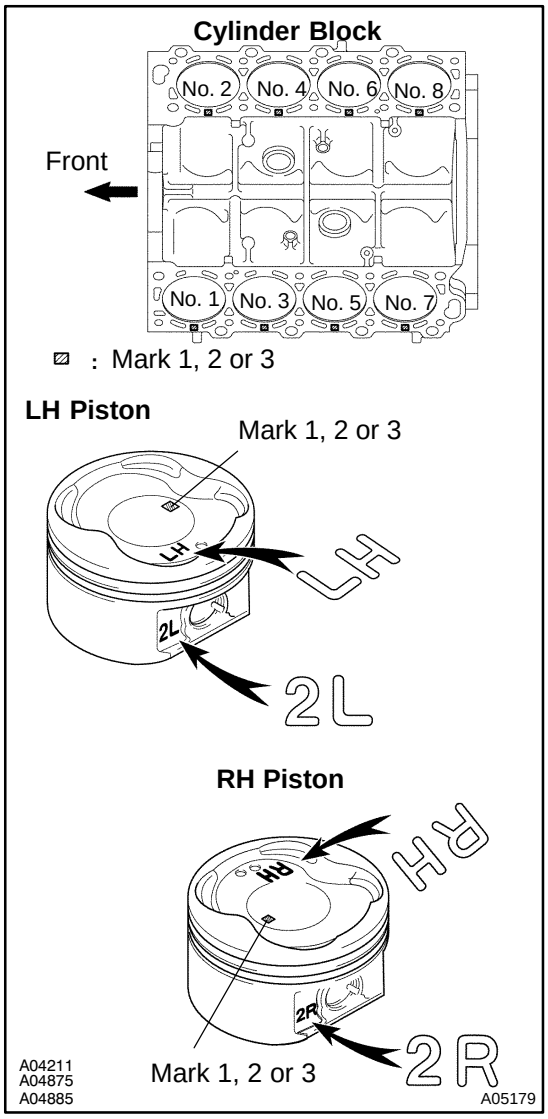

HINT

Use new cylinder block:

- ▲ Use a piston with the same number mark as the cylinder diameter marked on the cylinder block.
- ▲ The shape of the piston varies for the LH and RH banks. The LH piston is marked with ”LH” and ”2L”, the RH piston with ”RH” and ”2R”.

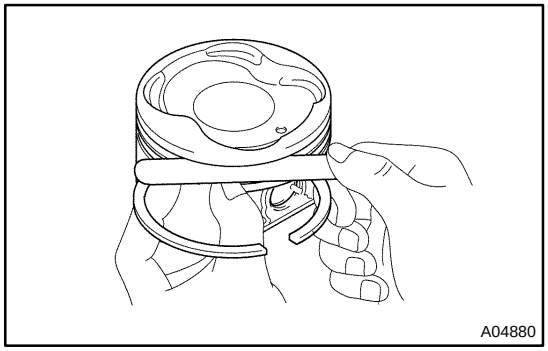

(b) Inspect the piston ring groove clearance.
Using a feeler gauge, measure the clearance between new piston ring and the wall of the ring groove.
Ring groove clearance:

No. 1	0.030 – 0.080 mm (0.0012 – 0.0031 in.)
No. 2	0.030 – 0.070 mm (0.0012 – 0.0028 in.)

If the clearance is not as specified, replace the piston.

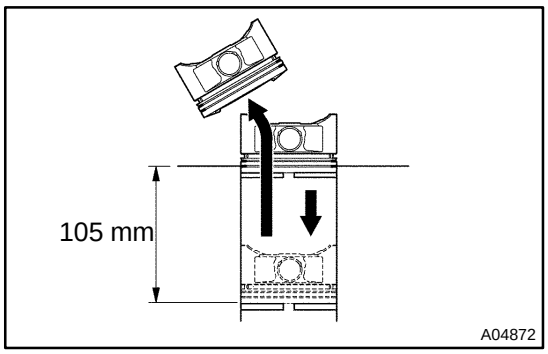

(c) Inspect the piston ring end gap.
(1) Insert the piston ring into the cylinder bore.
(2) Using a piston, push the piston ring a little to the bottom of the ring travel, 105 mm (4.13 in.) from the top of the cylinder block.

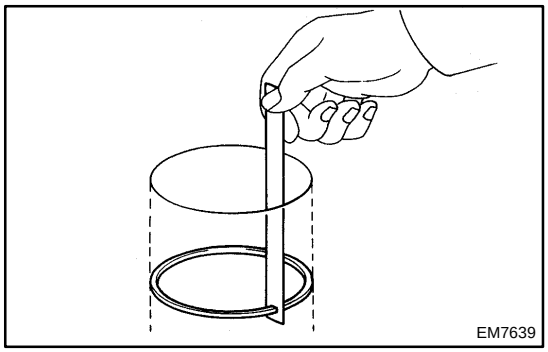

(3) Using a feeler gauge, measure the end gap.

Standard end gap:

No. 1	0.300 – 0.400 mm (0.0118 – 0.0157 in.)
No. 2	0.400 – 0.550 mm (0.0157 – 0.0217 in.)
Oil (Side rail)	0.130 – 0.380 mm (0.0051 – 0.0150 in.)

Maximum end gap:

No. 1	1.10 mm (0.0433 in.)
No. 2	1.20 mm (0.0472 in.)
Oil (Side rail)	1.15 mm (0.0453 in.)

If the end gap is greater than maximum, replace the piston ring.
If the end gap is greater than maximum, even with a new piston ring, rebore all the 8 cylinders (See page EM–107) or replace the cylinder block.

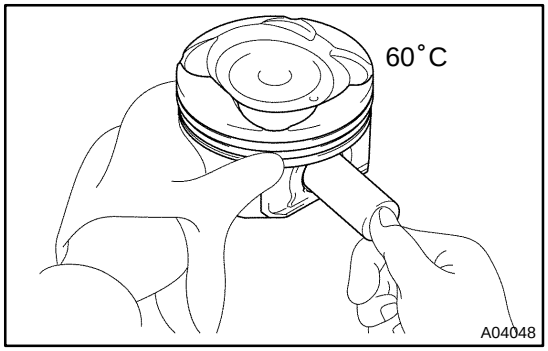

(d) Inspect the piston pin fit.
At 60˚C (140˚F), you should be able to push the piston pin into the piston pin hole with your thumb.

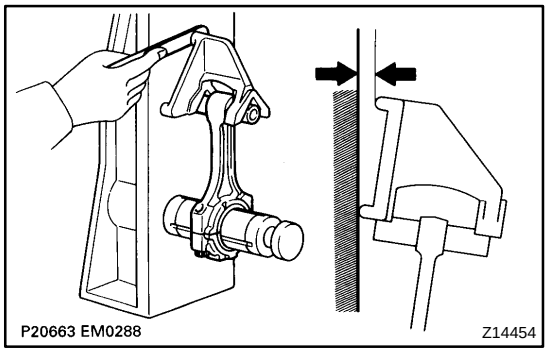

(e) Using a rod aligner and feeler gauge, check the connecting rod alignment.
(1) Check for bend.

Maximum bend:

0.05 mm (0.0020 in.) per 100 mm (3.94 in.)

If bend is greater than maximum, replace the connecting rod assembly.

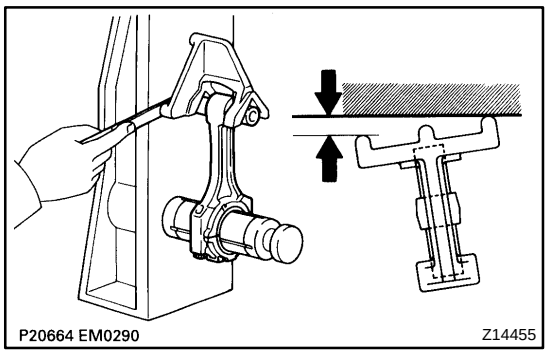

(2) Check for twist.

Maximum twist:

0.15 mm (0.0059 in.) per 100 mm (3.94 in.)

If twist is greater than maximum, replace the connecting rod assembly.

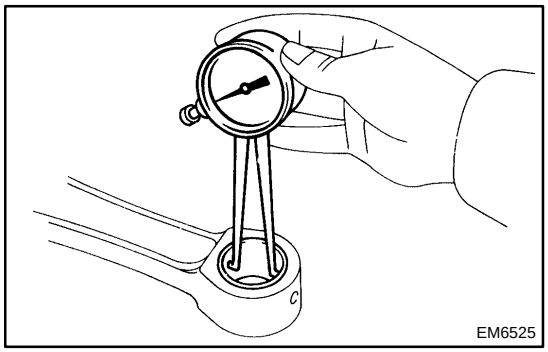

(f) Inspect the piston pin oil clearance.

(1) Using a caliper gauge, measure the inside diameter of the connecting rod bushing.

Bushing inside diameter:

22.005 – 22.014 mm (0.8663 – 0.8667 in.)

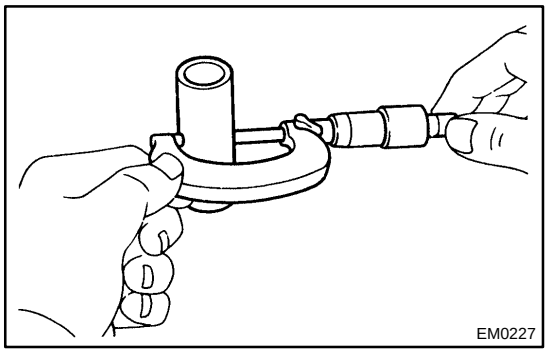

(2) Using a micrometer, measure the piston pin diameter.

Piston pin diameter:

21.997 – 22.009 mm (0.8660 – 0.8664 in.)

(3) Subtract the piston pin diameter measurement from the bushing inside diameter measurement.

Standard oil clearance:

0.005 – 0.011 mm (0.0002 – 0.0004 in.)

Maximum oil clearance: 0.05 mm (0.0020 in.)

If the oil clearance is greater than maximum, replace the bushing. If necessary, replace the piston and piston pin as a set.

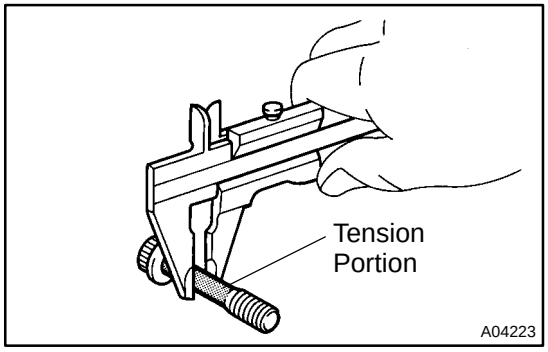

(g) Using vernier calipers, measure the tension portion of the connecting rod bolt.

Standard diameter:

7.200 – 7.300 mm (0.2835 – 0.2874 in.)

Minimum diameter: 7.00 mm (0.2756 in.)

If the diameter is less than minimum, replace the bolt.

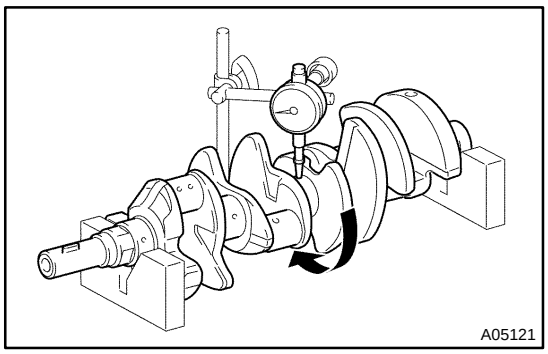

5. INSPECT CRANKSHAFT

(a) Inspect for circle runout.

(1) Place the crankshaft on V–blocks.

(2) Using a dial indicator, measure the circle runout at the center journal.

Maximum circle runout: 0.08 mm (0.0031 in.)

If the circle runout is greater than maximum, replace the crankshaft.

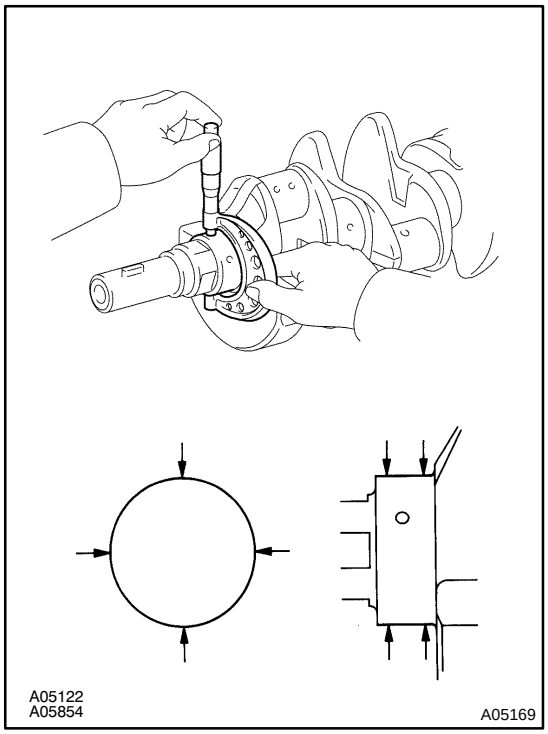

(b) Inspect the main journals and crank pins.

(1) Using a micrometer, measure the diameter of each main journal and crank pin.

Main journal diameter:
66.988 – 67.000 mm (2.6373 – 2.6378 in.)
Crank pin diameter:
51.982 – 52.000 mm (2.0465 – 2.0472 in.)

If the diameter is not as specified, check the oil clearance (See page EM–92). If necessary, replace the crankshaft.

(2) Check each main journal and crank pin for taper and out–of–round as shown.

Maximum taper and out–of–round:
0.02 mm (0.0008 in.)

If the taper and out–of–round is greater than maximum, replace the crankshaft.

EM123–01

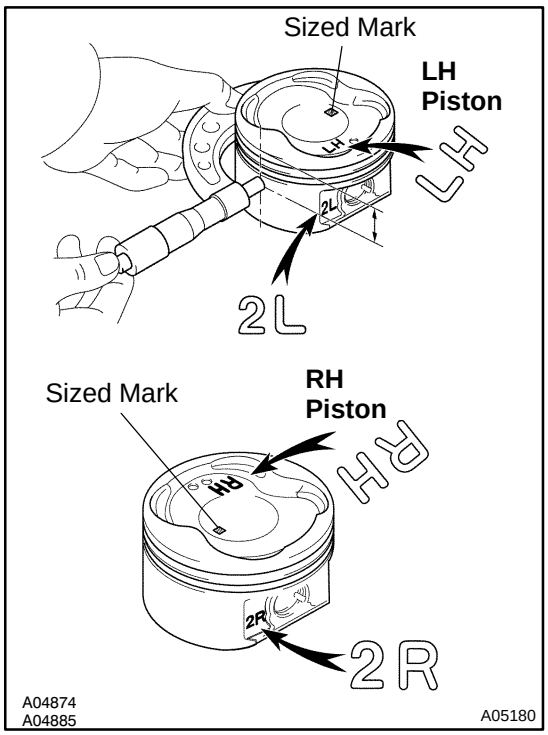

REPLACEMENT

1. REPLACE OVERSIZED (O/S) PISTONS

HINT:

- ▲ Bore all the 8 cylinders to the oversized piston outside diameter.
- ▲ Replace all the piston rings with ones to match the oversized pistons.

(a) Keep 8 new O/S pistons.
O/S 0.50 piston diameter:
94.402 – 94.430 mm (3.7166 – 3.7177 in.)

HINT:

The shape of the piston varies for the LH and RH banks. The LH piston is marked with ”LH” and ”2L”, the RH piston with ”RH” and ”2R”.

(b) Using a micrometer, measure the piston diameter at right angles to the piston pin center line, 30.75 mm (1.2106 in.) from the piston head.

(c) Calculate the amount each cylinder is to be rebored as follows:
Size to be rebored = P + C – H
P = Piston diameter
C = Piston clearance:
0.090 – 0.111 mm (0.0035 – 0.0044 in.)
H = Allowance for honing: 0.02 mm (0.0008 in.) or less

(d) Bore and hone the cylinders to calculated dimensions.
Maximum honing: 0.02 mm (0.0008 in.)

NOTICE:
Excess honing will destroy the finished roundness.

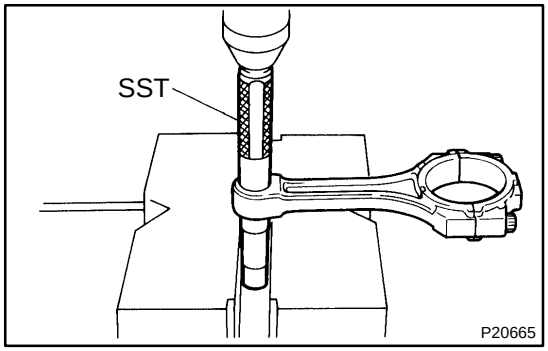

2. REPLACE CONNECTING ROD BUSHINGS

(a) Using SST and a press, press out the bushing.
SST 09222–30010

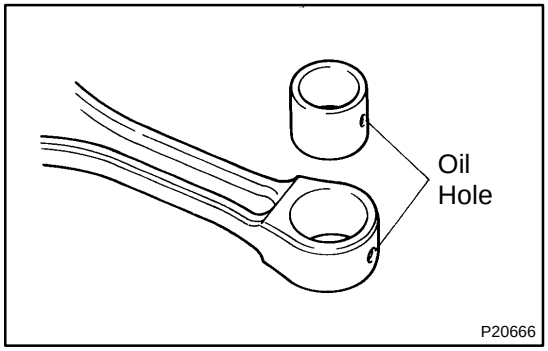

(b) Align the oil holes of a new bushing and the connecting rod.

(c) Using SST and a press, press in the bushing.
SST 09222–30010

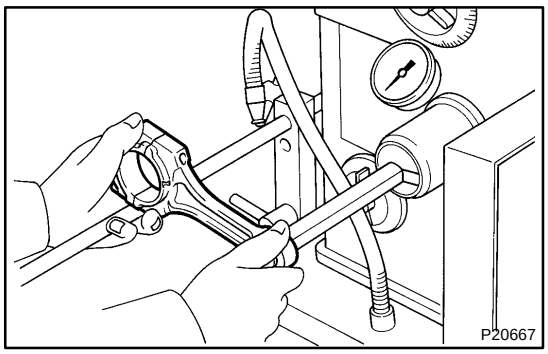

(d) Using a pin hole grinder, hone the bushing to obtain the standard specified clearance (See page EM–100) between the bushing and piston pin.

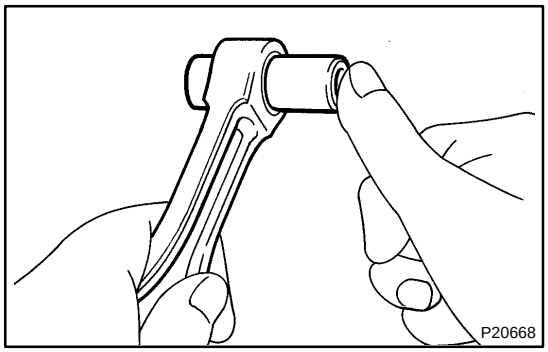

(e) Check the piston pin fit at normal room temperature. Coat the piston pin with engine oil, and push it into the connecting rod with your thumb.

3. REPLACE CRANKSHAFT FRONT OIL SEAL (See page LU–13)

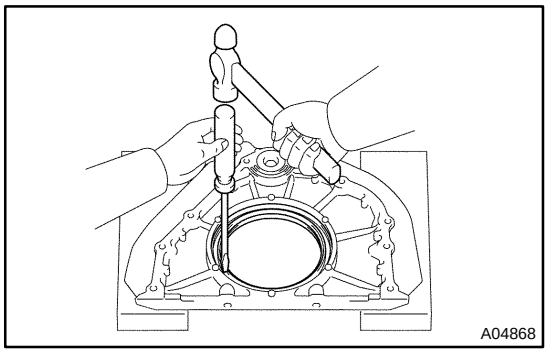

4. REPLACE CRANKSHAFT REAR OIL SEAL

HINT:

There are 2 methods ((a) and (b)) to replace the oil seal.

(a) If the rear oil seal retainer is removed from the cylinder block:

(1) Using a screwdriver and hammer, tap out the oil seal.

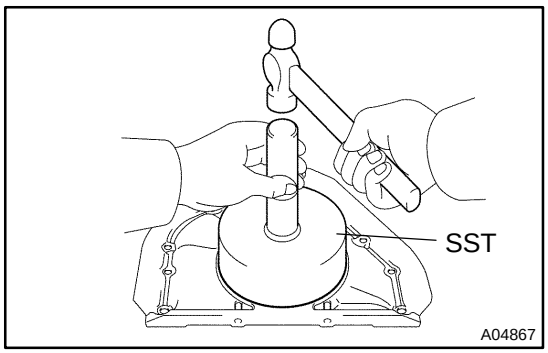

(2) Using SST and a hammer, tap in a new oil seal until its surface is flush with the rear oil seal retainer edge.

SST 09223–56010

(3) Apply MP grease to the oil seal lip.

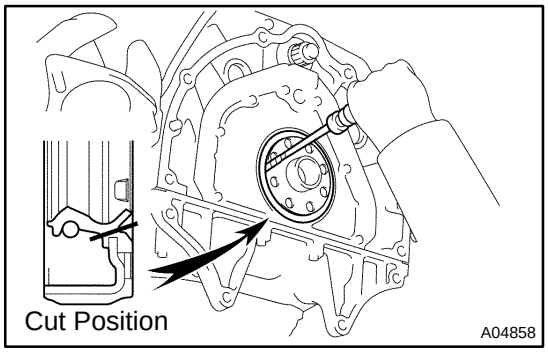

(b) If the rear oil seal retainer is installed to the cylinder block:

(1) Using a knife, cut off the oil seal lip.

(2) Using a screwdriver, pry out the oil seal.

NOTICE:

Be careful not to damage the crankshaft. Tape the screwdriver tip.

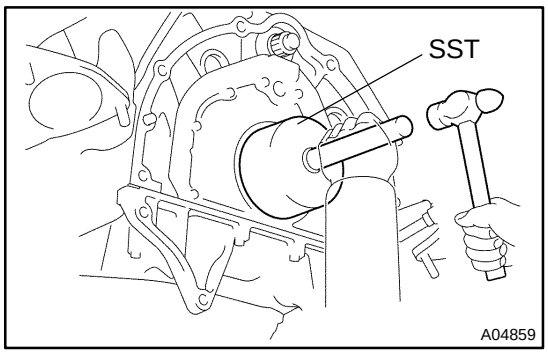

(3) Apply MP grease to a new oil seal lip.
(4) Using SST and a hammer, tap in the oil seal until its surface is flush with the rear oil seal retainer edge.

SST 09223–56010

EM124–05

REASSEMBLY

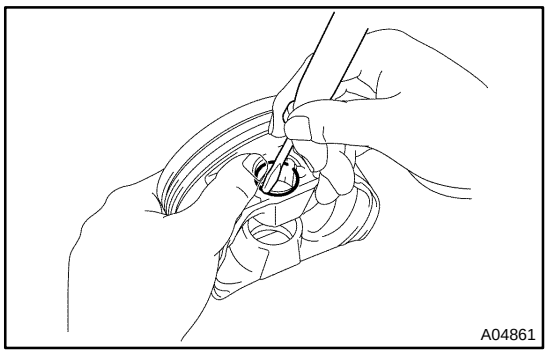

HINT:

- ▲ Thoroughly clean all parts to be assembled.
- ▲ Before installing the parts, apply fresh engine oil to all sliding and rotating surfaces.
- ▲ Replace all gaskets, O–rings and oil seals with new parts.

1. ASSEMBLE PISTON AND CONNECTING ROD

(a) Using a small screwdriver, install a new snap ring on one side of the piston pin hole.

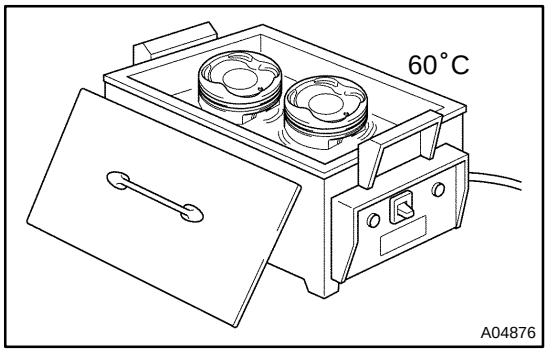

(b) Gradually heat the piston to about 60˚C (140˚F).

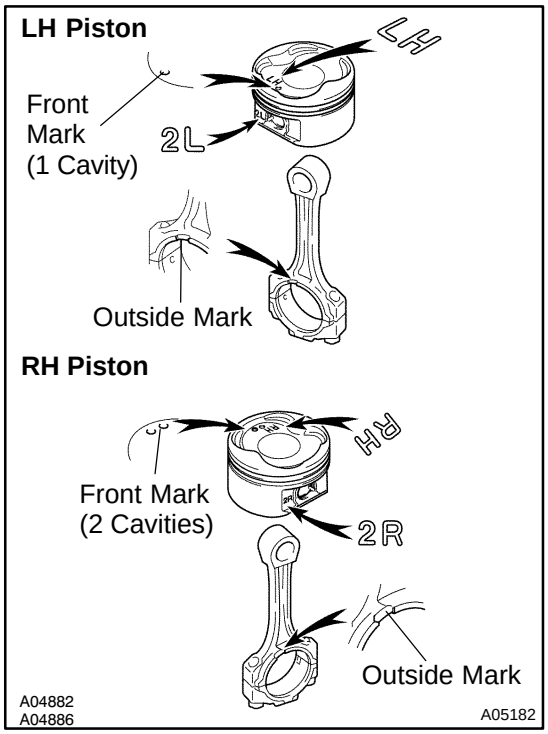

(c) Coat the piston pin with engine oil.

(d) Position the piston front mark with respect to the outside mark on the connecting rod as shown in the illustration.

NOTICE:

The installation directions of the piston and connecting rod are different for the LH and RH banks. The LH piston is marked with ”LH” and ”2L”, the RH piston with ”RH” and ”2R”.

(e) Align the piston pin holes of the piston and connecting rod, and push in the piston pin with your thumb.

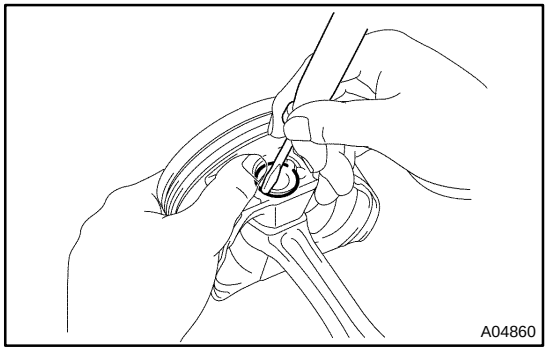

(f) Using a small screwdriver, install a new snap ring on the other side of the piston pin hole.

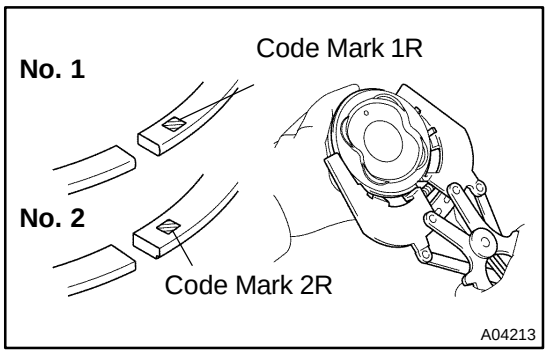

2. INSTALL PISTON RINGS

(a) Install the oil ring expander and 2 side rails by hand.

(b) Using a piston ring expander, install the 2 compression rings with the code mark facing upward.

Code mark:

No. 1	1R
No. 2	2R

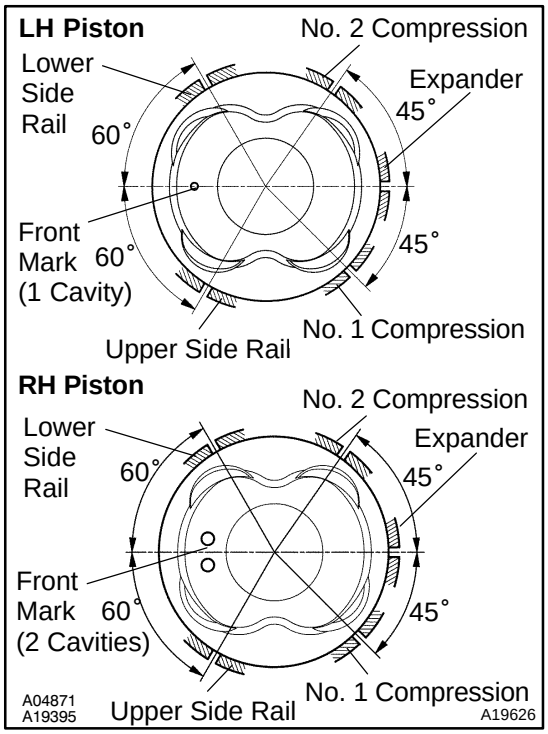

(c) Position the piston rings so that the ring ends are as shown.

NOTICE:

Do not align the ring ends.

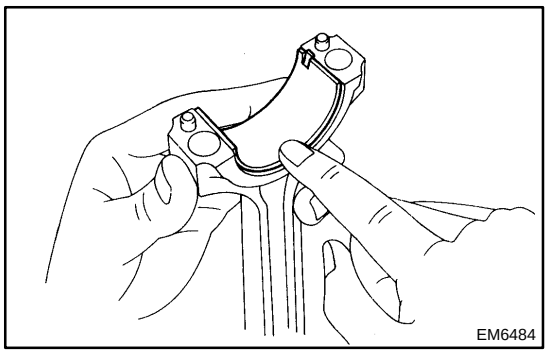

3. INSTALL BEARINGS

(a) Align the bearing claw with the groove of the connecting rod or connecting cap.

(b) Install the bearings in the connecting rod and connecting rod cap.

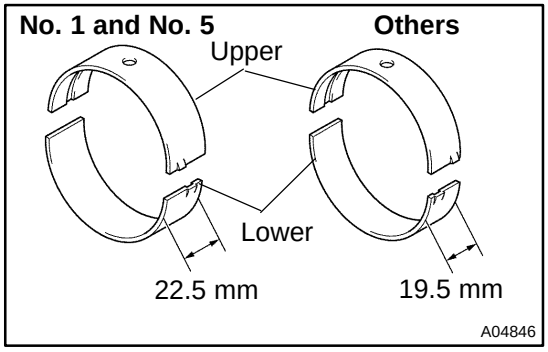

4. INSTALL MAIN BEARINGS

HINT:

▲ Main bearings come in widths of 19.5 mm (0.768 in.) and 22.5 mm (0.886 in.). Install the 22.5 mm (0.886 in.) bearings in the No. 1 and No. 5 cylinder block journal positions with the main bearing cap. Install the 19.5 mm (0.768 in.) bearings in the other positions.

▲ Upper bearings have an oil groove and oil holes; lower bearings do not.

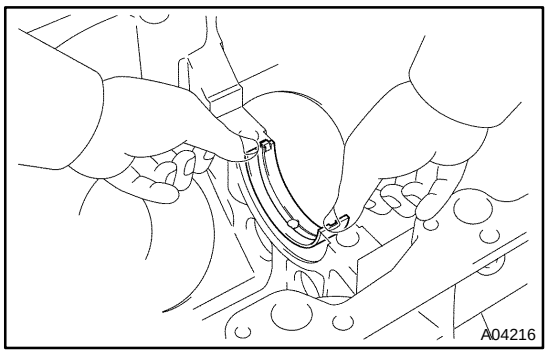

(a) Align the bearing claw with the claw groove of the cylinder block, and push in the 5 upper bearings.

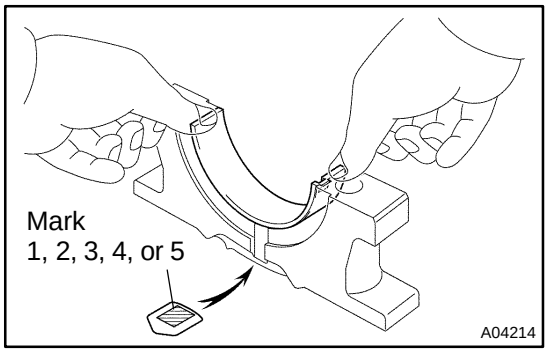

(b) Align the bearing claw with the claw groove of the main bearing cap, and push in the 5 lower bearings.

HINT:

A number is marked on each main bearing cap to indicate the installation position.

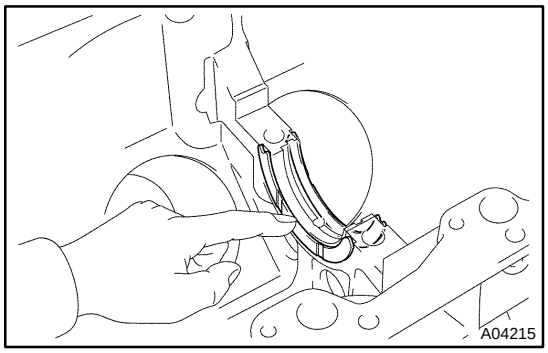

5. INSTALL UPPER THRUST WASHERS

Install the 2 thrust washers under the No.3 journal position of the cylinder block with the oil grooves facing outward.

6. PLACE CRANKSHAFT ON CYLINDER BLOCK

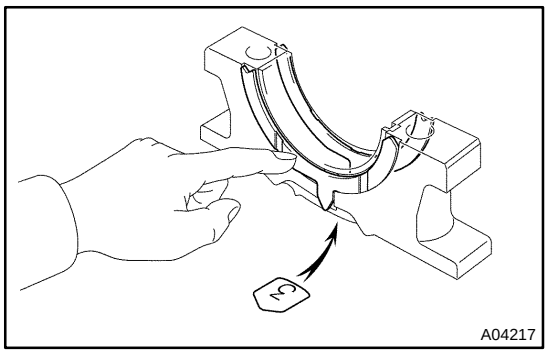

7. PLACE MAIN BEARING CAPS AND LOWER THRUST WASHERS ON CYLINDER BLOCK

(a) Install the 2 thrust washers on the No.3 bearing cap with the grooves facing outward.

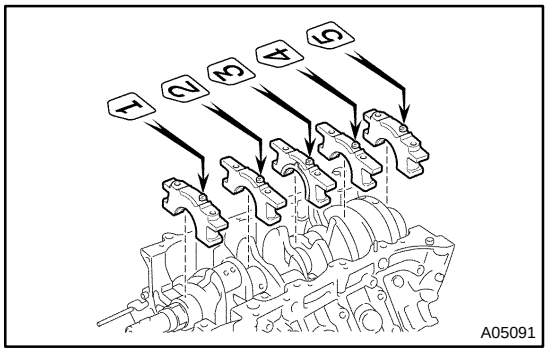

(b) Install the 5 main bearing caps in their proper locations.

8. INSTALL MAIN BEARING CAP BOLTS

HINT:

- ▲ The main bearing cap bolts are tightened in 2 progressive steps (steps (b) and (d)).
- ▲ If any one of the main bearing cap bolts is broken or deformed, replace it.

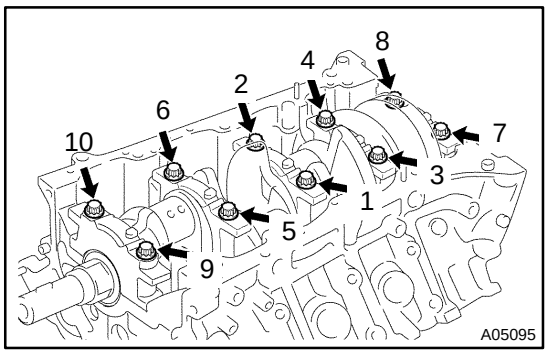

(a) Apply a light coat of engine oil on the threads and under the main bearing cap bolts.
(b) Install and uniformly tighten the 10 main bearing cap bolts in several passes, in the sequence shown.
Torque: 27 N·m (275 kgf·cm, 20 ft·lbf)

If any one of the main bearing cap bolts does not meet the torque specification, replace the main bearing cap bolt.

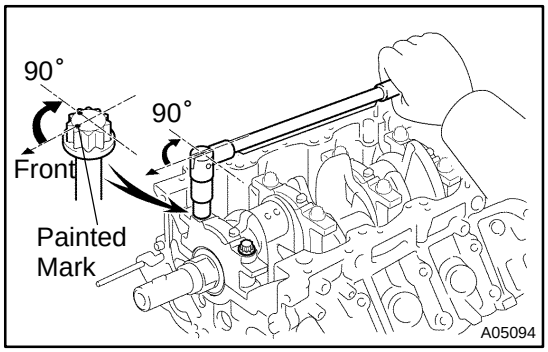

(c) Mark the front of the main bearing cap bolt with paint.
(d) Retighten the main bearing cap bolts by 90° in the numerical order shown.
(e) Check that the painted mark is now at a 90° angle to the front.
(f) Check that the crankshaft turns smoothly.

9. CHECK CRANKSHAFT THRUST CLEARANCE (See page EM–92)

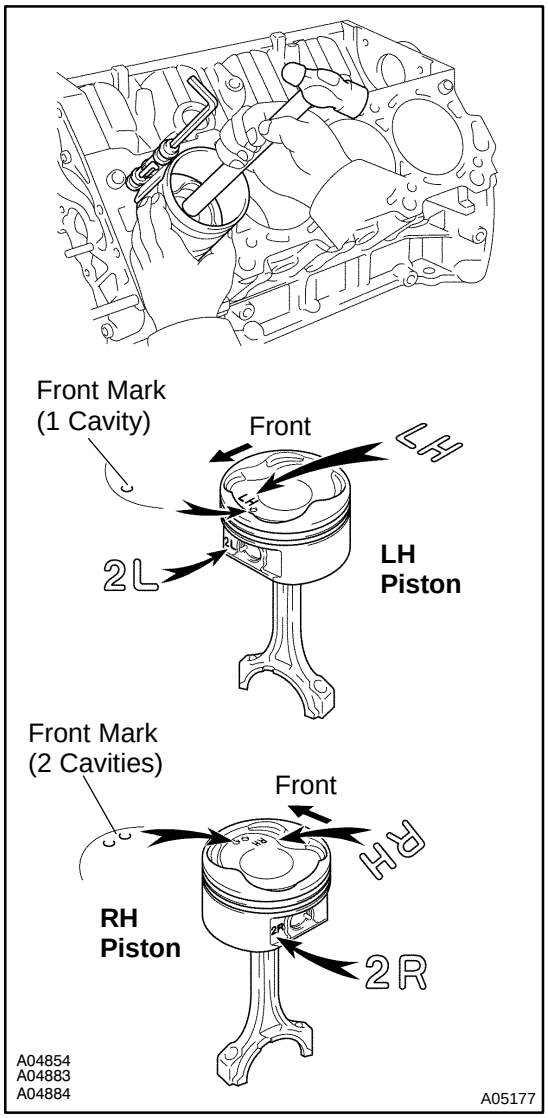

10. INSTALL PISTON AND CONNECTING ROD ASSEMBLES

Using a piston ring compressor, push correctly the numbered piston and connecting rod assemblies into each cylinder with the front mark of the piston facing forward.

NOTICE:

The shape of the piston varies for the LH and RH banks. The LH piston is marked with ”LH” and ”2R”, the RH piston with ”RH” and ”2R”.

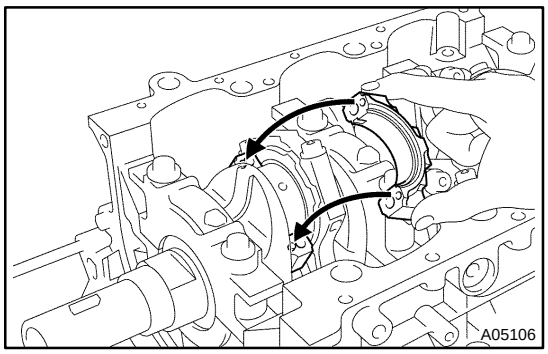

11. PLACE CONNECTING ROD CAP ON CONNECTING ROD

(a) Match the numbered connecting rod cap with the connecting rod.

(b) Align the pin groove of the connecting rod cap with the pins of the connecting rod, and install the connecting rod cap.

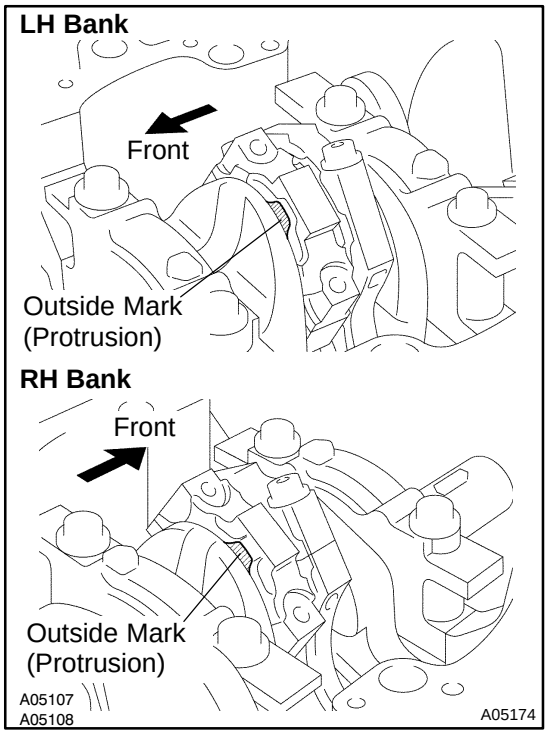

(c) Check that the outside mark of the connecting rod cap is facing in correct direction.

12. INSTALL CONNECTING ROD CAP BOLTS

HINT:

▲ The connecting rod cap bolts are tightened in 2 progressive steps (steps (b) and (d)).

▲ If any one of the connecting rod cap bolts is broken or deformed, replace it.

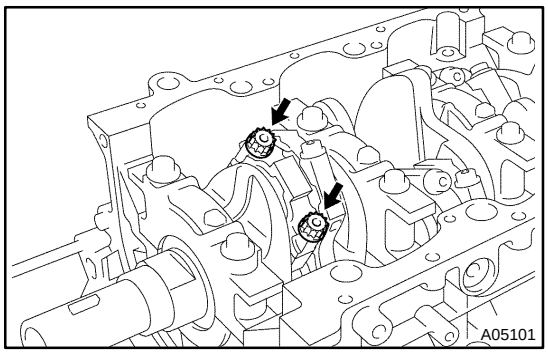

(a) Apply a light coat of engine oil on the threads and under the heads of the connecting rod cap bolts.

(b) Install and alternately tighten the 2 connecting rod cap bolts in several passes.

Torque: 24.5 N·m (250 kgf·cm, 18 ft·lbf)

If any one of the connecting rod cap bolts does not meet the torque specification, replace the connecting rod cap bolts.

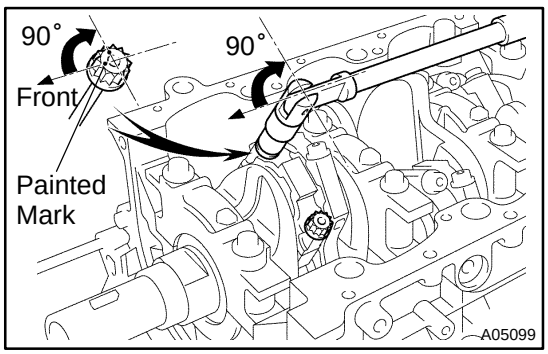

(c) Mark the front of the connecting cap bolt with paint.

(d) Retighten the cap bolts by 90° as shown.

(e) Check that the painted mark is now at a 90° angle to the front.

(f) Check that the crankshaft turns smoothly.

13. CHECK CONNECTING ROD THRUST CLEARANCE (See page EM–92)

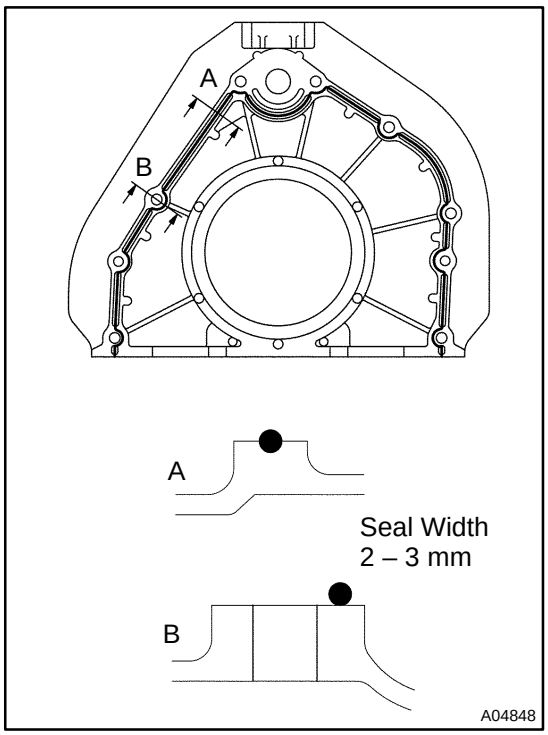

14. INSTALL REAR OIL SEAL RETAINER

(a) Remove any old packing (FIPG) material and be careful not to drop any oil on the contacting surfaces of the oil seal retainer and cylinder block.

- ▲ Using a razor blade and gasket scraper, remove all the old packing (FIPG) materials from the gasket surfaces and sealing grooves.
- ▲ Thoroughly clean all components to remove all the loose material.
- ▲ Using a non–residue solvent, clean both sealing surfaces.

(b) Apply seal packing to the oil seal retainer as shown in the illustration.

Seal packing: Part No. 08826–00080 or equivalent

- ▲ Install a nozzle that has been cut to a 2 – 3 mm (0.08 – 0.12 in.) opening.
- ▲ Parts must be assembled within 5 minutes of application. Otherwise the material must be removed and reapplied.
- ▲ Immediately remove nozzle from the tube and reinstall cap.

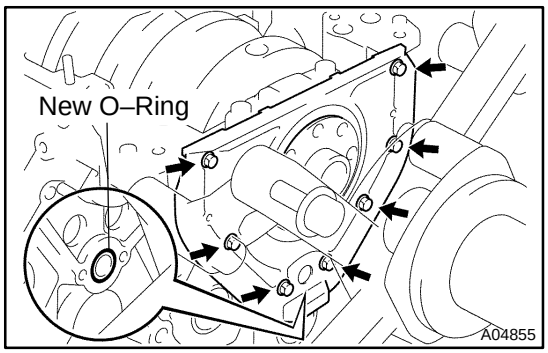

(c) Install a new O–ring to the cylinder block.

(d) Install the oil seal retainer with the 7 bolts.

Torque: 8.0 N·m (80 kgf·cm, 71 in.·lbf)

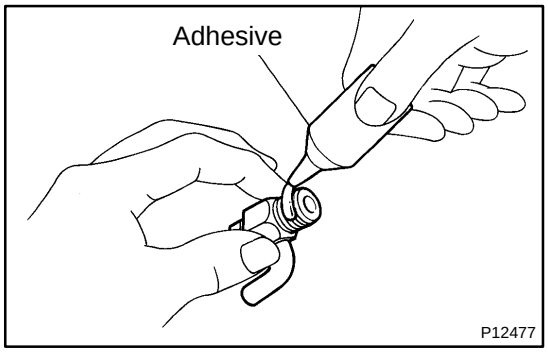

15. INSTALL ENGINE COOLANT DRAIN UNIONS

(a) Apply adhesive to 2 or 3 threads.

Adhesive:

Part No. 08833–00070, THREE BOND 1324 or equivalent

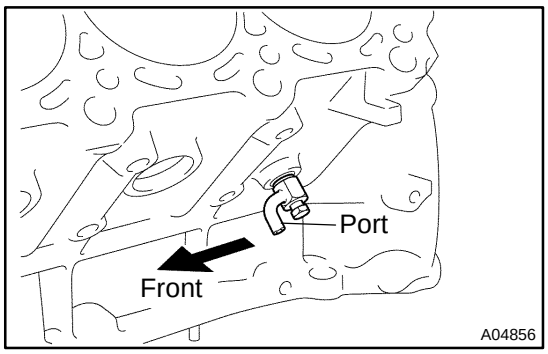

(b) Install the 2 drain unions.
Torque: 49 N·m (500 kgf·cm, 36 ft·lbf)

HINT:
After applying the specified torque, rotate the drain union clockwise until its drain port is facing forward.

16. INSTALL OIL PUMP (See page LU–15)
17. INSTALL OIL STRAINER (See page LU–15)
18. INSTALL NO. 1 OIL PAN (See page LU–15)
19. INSTALL OIL PAN BAFFLE PLATE (See page LU–15)
20. INSTALL NO. 2 OIL PAN (See page LU–15)
21. INSTALL WATER PUMP (See page CO–8)
22. INSTALL ENGINE MOUNTING BRACKETS

Install the mounting bracket with the 4 bolts. Install the 2 mounting brackets.
Torque: 36 N·m (370 kgf·cm, 27 ft·lbf)

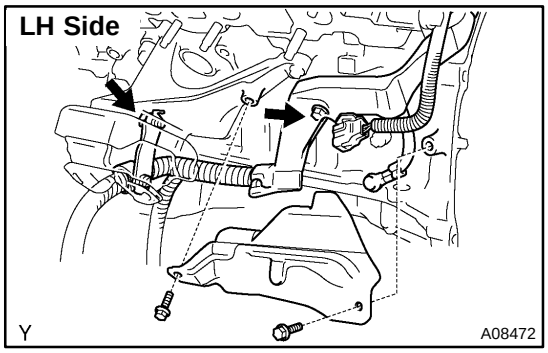

23. INSTALL ENGINE WIRE TO LH SIDE OF CYLINDER BLOCK
(a) Install the brackets on the engine wire with the 2 bolts.
(b) Install the engine wire cover with the 2 bolts.
24. INSTALL OIL COOLER PIPE BRACKET FOR A/T

Install the bracket with the bolt.

25. INSTALL KNOCK SENSORS (See page SF–49)
26. INSTALL STARTER (See page ST–19)

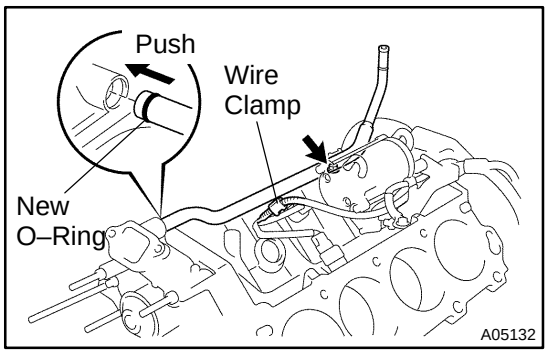

27. INSTALL WATER BYPASS PIPE
(a) Install a new O–ring to the water bypass pipe.
(b) Apply soapy water to the O–ring.
(c) Push in the water bypass pipe end into the pipe hole of the water pump.
(d) Install the water bypass pipe with the bolt.
Torque: 18 N·m (185 kgf·cm, 13 ft·lbf)
(e) Install the wire clamp to the bracket of the water bypass pipe.

28. INSTALL CYLINDER HEADS (See page EM–56)
29. INSTALL TIMING BELT AND PULLEYS (See page EM–21)
30. DISCONNECT ENGINE FROM ENGINE STAND

EXHAUST SYSTEM

EM0EE–17

COMPONENTS

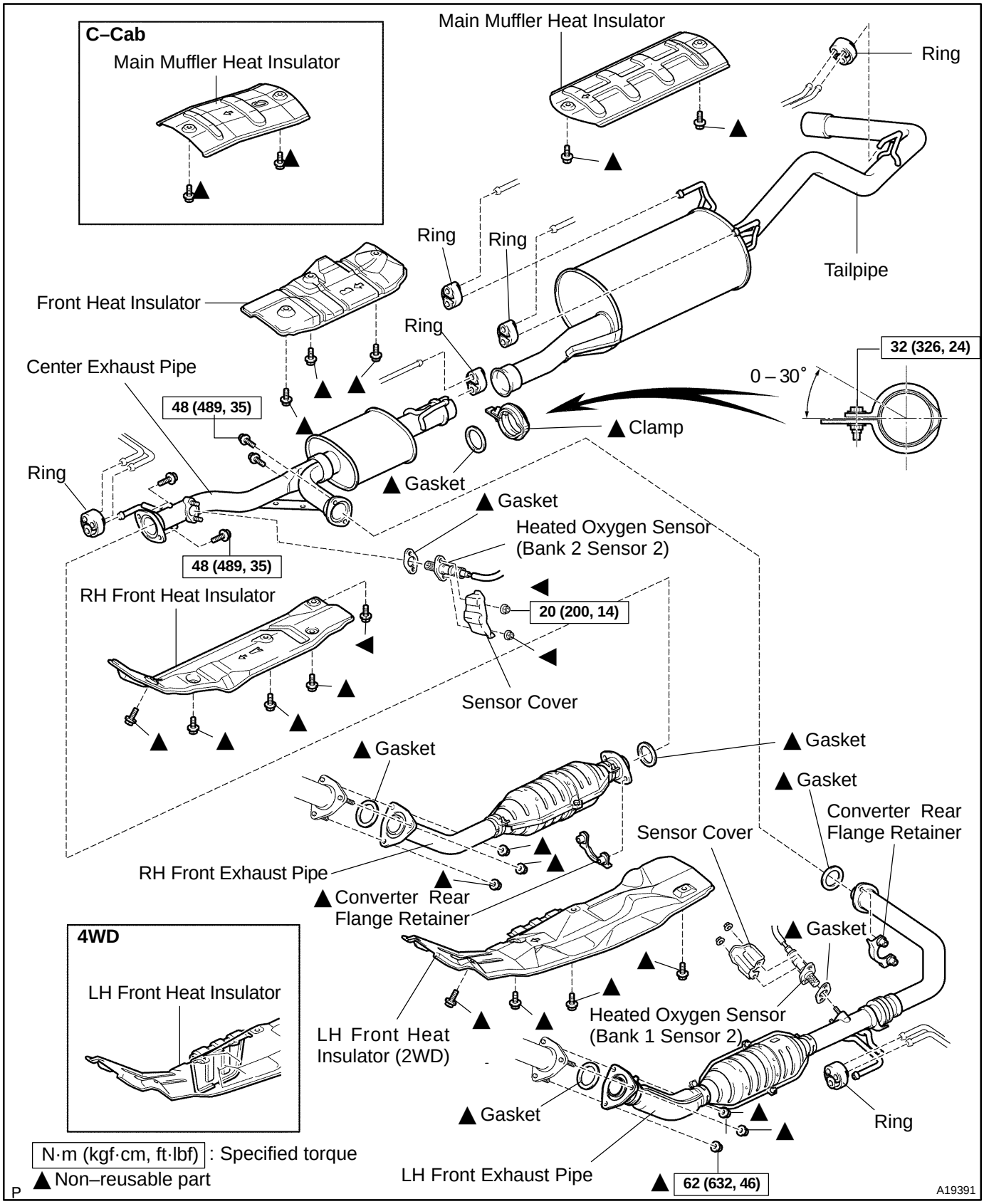

IGNITION SYSTEM

IG0M8–01

ON–VEHICLE INSPECTION

NOTICE:

"Cold" and "Hot" in these sentences express the temperature of the coils themselves. "Cold" is from –10˚C (14˚F) to 50˚C (122˚F) and "Hot" is from 50˚C (122˚F) to 100˚C (212˚F).

1. INSPECT IGNITION COIL (WITH IGNITER) AND SPARK TEST

(a) Check that the spark occurs.

(b) Remove the ignition coils (with igniter) (See page IG–5).

(c) Remove the spark plugs.

(d) Install the spark plugs to each ignition coil (with igniter), and connect the ignition coil (with igniter) connector.

(e) Disconnect the 8 injector connectors.

(f) Ground the spark plug.

(g) Check that spark occurs while engine is being cranked.

NOTICE:

To prevent excess fuel from being injected out of the injectors during this test, do not crank the engine for more 5 – 10 seconds at a time.

If the spark does not occur, do the test as follows:

SPARK TEST

↓ NO

CHECK CONNECTION OF IGNITION COIL AND IGNITER CONNECTORS → BAD → Connect securely.

↓ OK

CHECK RESISTANCE OF HIGH–TENSION CORD (See step 2)
Maximum resistance: 25 kΩ per cord → BAD → Replace cord(s).

↓ OK

CHECK POWER SUPPLY TO IGNITION COIL AND IGNITER
1. Turn ignition switch to ON.
2. Check that there is battery positive voltage at ignition coil positive (+) terminal.

→ BAD → Check wiring between ignition switch to ignition coil and igniter.

↓ OK

CHECK RESISTANCE OF IGNITION COIL (See step 4)

Resistance:	Cold	Hot
Primary	0.67 – 1.05 Ω	0.85 – 1.23 Ω
Secondary	9.3 – 16.0 kΩ	11.7 – 18.8 kΩ

→ BAD → Replace ignition coil.

↓ OK

CHECK RESISTANCE OF CAMSHAFT POSITION SENSOR (See step 5)

Resistance:	Cold	Hot
	835 – 1,400 Ω	1,060 – 1,645 Ω

→ BAD → Replace camshaft position sensor.

↓ OK

CHECK RESISTANCE OF CRANKSHAFT POSITION SENSOR (See page IG–13)

Resistance:	Cold	Hot
	1,630 – 2,740 Ω	2,065 – 3,225 Ω

→ BAD → Replace crankshaft position sensor.

↓ OK

CHECK IGT SIGNAL FROM ECM (See page DI–21) → BAD → Check ECM (See page IN–27).

↓ OK

REPAIR WIRING BETWEEN IGNITION COIL AND ECM

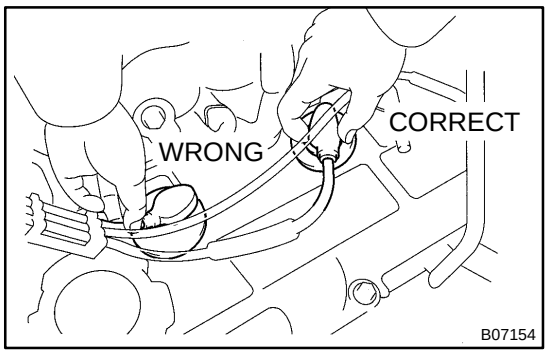

2. INSPECT HIGH–TENSION CORDS

(a) Remove the air cleaner cap and MAF meter assembly.

(b) Disconnect the high–tension cords from the spark plugs.
Disconnect the high–tension cords at the rubber boot.
Do not pull on the cords.

NOTICE:

Pulling on or bending the cords may damage the conductor inside.

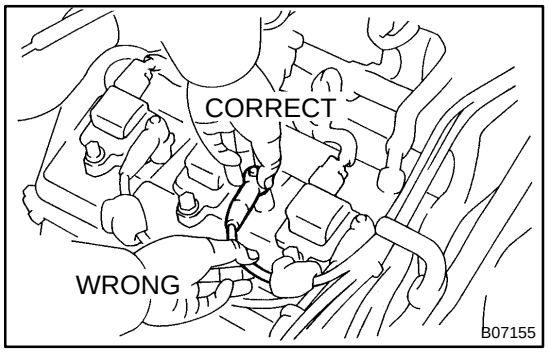

(c) Disconnect the high–tension cords from the ignition coils.
(1) Using a screwdriver, lift up the lock claw and disconnect the holder from the ignition coils.
(2) Disconnect the high–tension cord at the grommet.
Do not pull on the cord.

NOTICE:

Pulling on or bending the cords may damage the conductor inside. Do not wipe any of the oil from the grommet after the high–tension cord is disconnected.

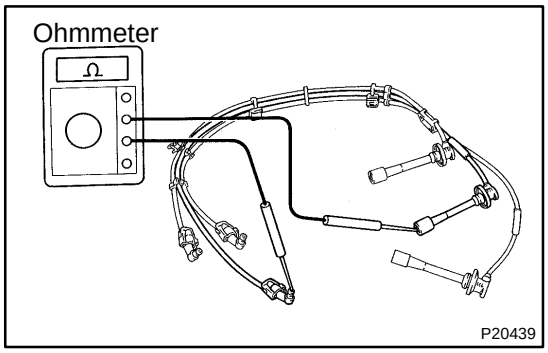

(d) Inspect the high–tension cord resistance.
Using an ohmmeter, measure the resistance.
Maximum resistance: 25 kΩ per cord

If the resistance is greater than maximum, check the terminals.
If necessary, replace the high–tension cord.

(e) Reconnect the high–tension cords to ignition coils.

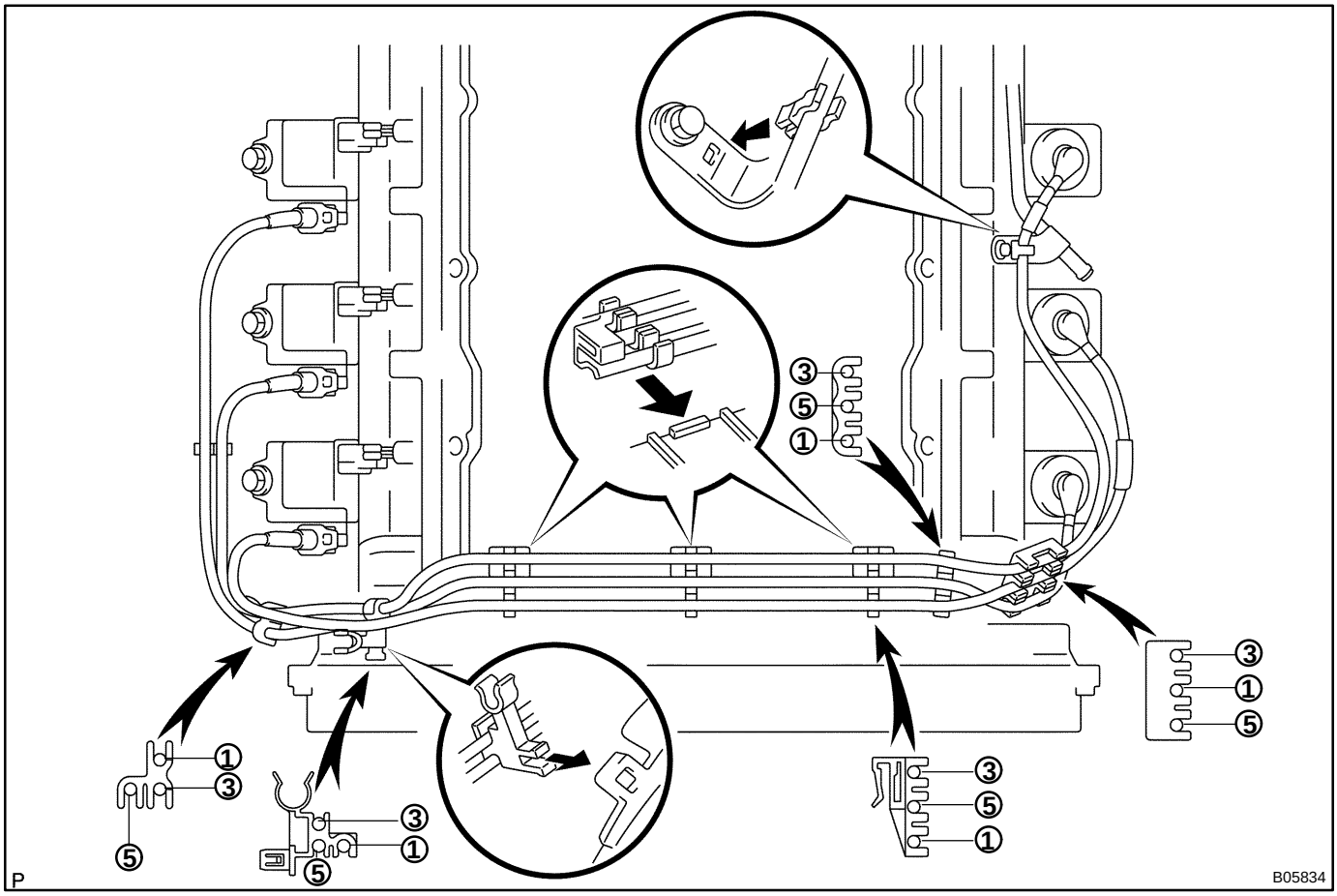

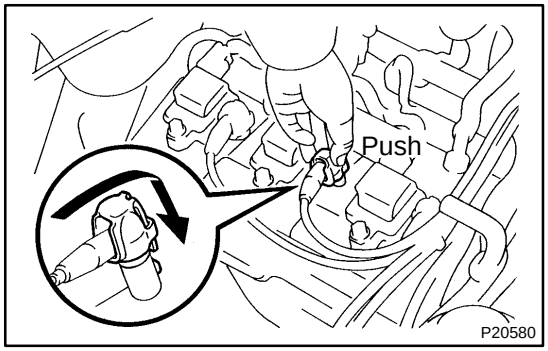

(1) Assemble the holder and grommet.
(2) Align the spline of the ignition coil with the spline of the holder, and push in the cord.

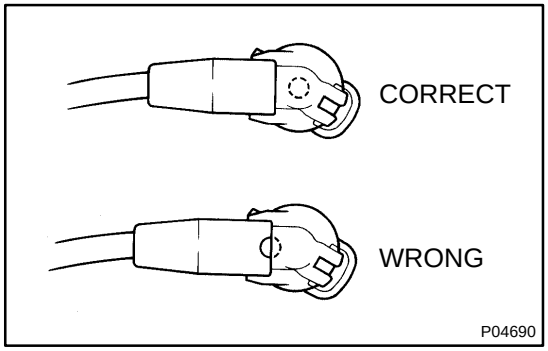

NOTICE:

Check that the holder is correctly installed to the grommet and distributor cap as shown in the illustration.

(3) Check that the lock claw of the holder is engaged by lightly pulling the holder.

(f) Reconnect the high–tension cords to spark plugs.

(g) Reinstall the air cleaner cap and MAF meter assembly.

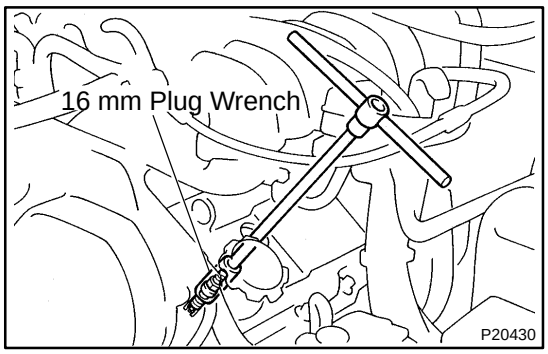

3. INSPECT SPARK PLUGS

(a) Remove the high–tension cords.

(b) Remove the spark plugs.

Using a 16 mm plug wrench, remove the 6 spark plugs from the RH and LH cylinder heads.

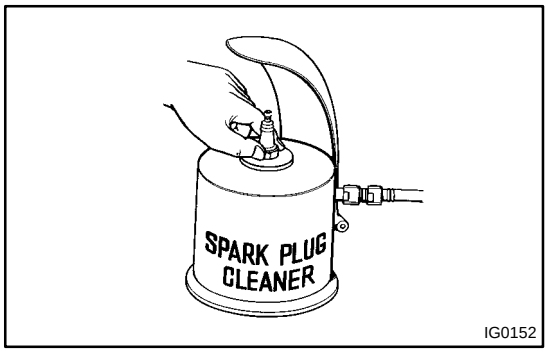

(c) Clean the spark plugs.

If the electrode has traces of wet carbon, allow it to dry and then clean with a spark plug cleaner.

Air pressure: Below 588 kPa (6 kgf/cm^2, 85 psi)

Duration: 20 seconds or less

HINT:

If there are traces of oil, remove it with gasoline before using the spark plug cleaner.

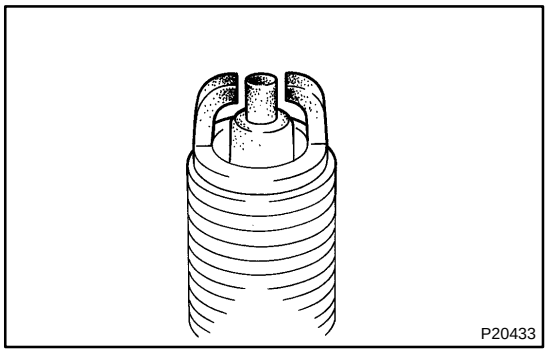

(d) Visually inspect the spark plugs.

Check the spark plug for thread damage and insulator damage.

If abnormal, replace the spark plug.

Recommended spark plug:

DENSO made	K16TR11
NGK made	BKR5EKB–11

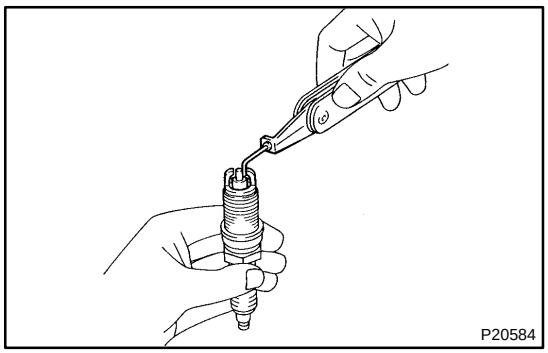

(e) Adjust the electrode gap.

Carefully bend the outer electrode to obtain the correct electrode gap.

Correct electrode gap: 1.1 mm (0.043 in.)

(f) Reinstall the spark plugs.

Torque: 20 N·m (200 kgf·cm, 14 ft·lbf)

(g) Reinstall the ignition coils. (See page IG–8)

(h) Reconnect the high–tension cords.

4. INSPECT IGNITION COIL

(a) Remove the air cleaner hose.

(b) Disconnect the high–tension cords from the ignition coils.

(c) Disconnect the ignition coil connectors.

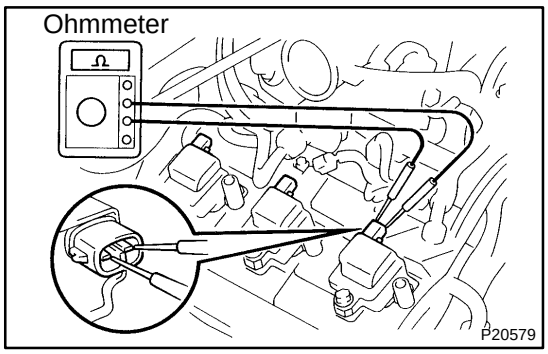

(d) Inspect the primary coil resistance.
Using an ohmmeter, measure the resistance between the positive (+) and negative (–) terminals.
Primary coil resistance :

Cold	0.67 – 1.05 Ω
Hot	0.85 – 1.23 Ω

If the resistance is not as specified, replace the ignition coil.

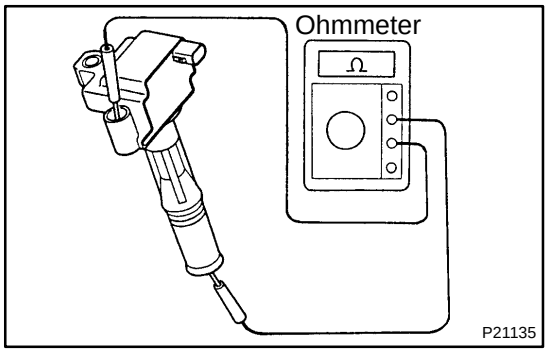

(e) Remove the ignition coils.
(f) Inspect the secondary coil resistance.
Using an ohmmeter, measure the resistance between the positive (+) and high–tension terminals.
Secondary coil resistance:

Cold	9.3 – 16.0 kΩ
Hot	11.7 – 18.8 kΩ

If the resistance is not as specified, replace the ignition coil.
(g) Reinstall the ignition coils.
(h) Reconnect the ignition coil connectors and high–tension cords.
(i) Reinstall the air cleaner hose.

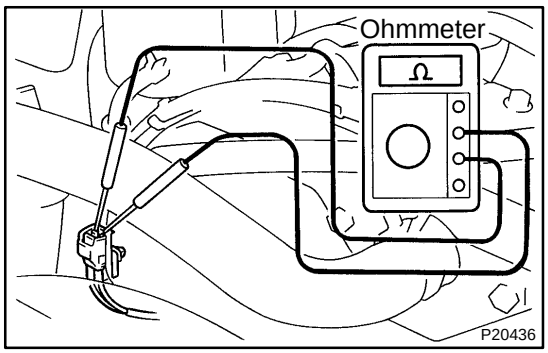

5. INSPECTION CAMSHAFT POSITION SENSOR
(a) Disconnect the camshaft position sensor connectors.
(b) Inspect the camshaft position sensor resistance.
Using an ohmmeter, measure the resistance between terminals.
Resistance:

Cold	835 – 1,400 Ω
Hot	1,060 – 1,645 Ω

If the resistance is not as specified, replace the camshaft position sensor.
(c) Reconnect the camshaft position sensor connector.
6. INSPECT IGNITER (See step 1)

IGNITION COIL

COMPONENTS

IG03P–04

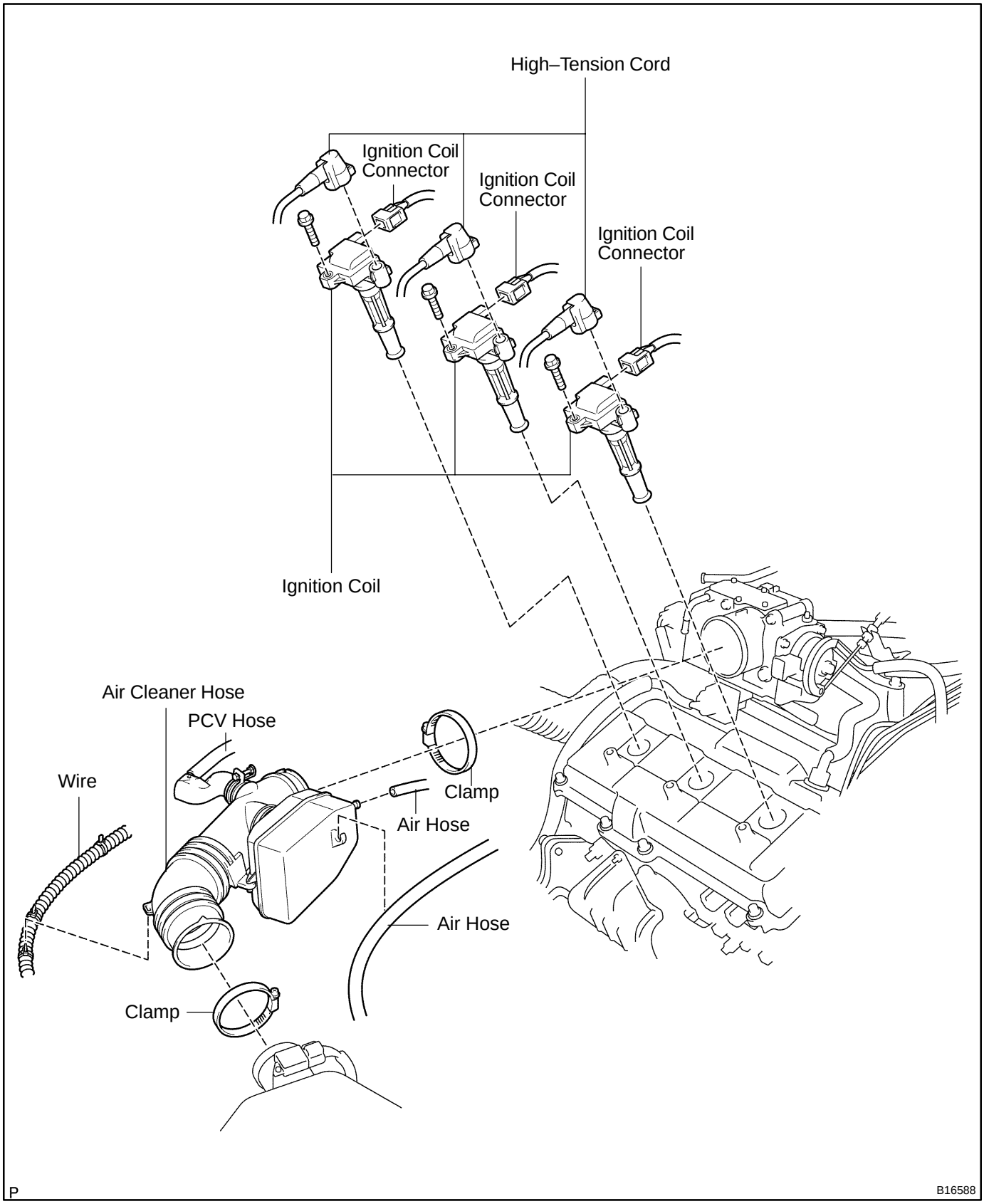

IG03Q–04

REMOVAL

1. REMOVE AIR CLEANER HOSE

2. DISCONNECT HIGH–TENSION CORDS FROM IGNITION COILS (See page IG–1)

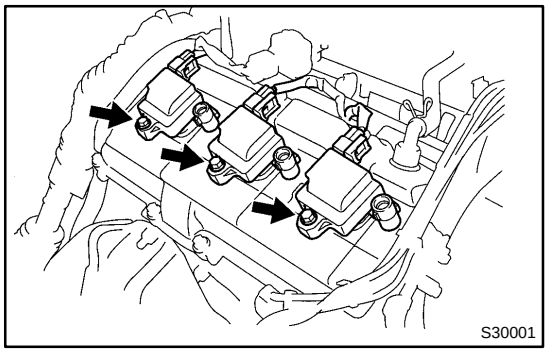

3. REMOVE IGNITION COILS

(a) Disconnect the 3 connectors from the ignition coils.

(b) Remove the 3 bolts and 3 ignition coils from the RH cylinder head cover.

HINT:

Arrange the ignition coils in correct order.

IG0EK–02

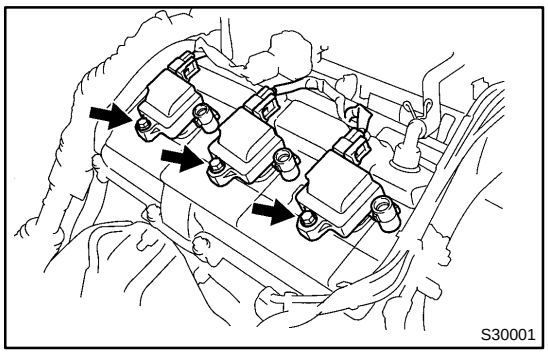

INSTALLATION

1. INSTALL IGNITION COILS

(a) Install the 3 ignition coils to the RH cylinder head cover with the 3 bolts.

Torque: 8 N·m (80 kgf·cm, 70 in.·lbf)

(b) Connect the 3 connectors to the ignition coils.

2. CONNECT HIGH–TENSION CORDS TO IGNITION COILS (See page IG–1)

3. INSTALL AIR CLEANER HOSE

CAMSHAFT POSITION SENSOR

IG03S–04

COMPONENTS

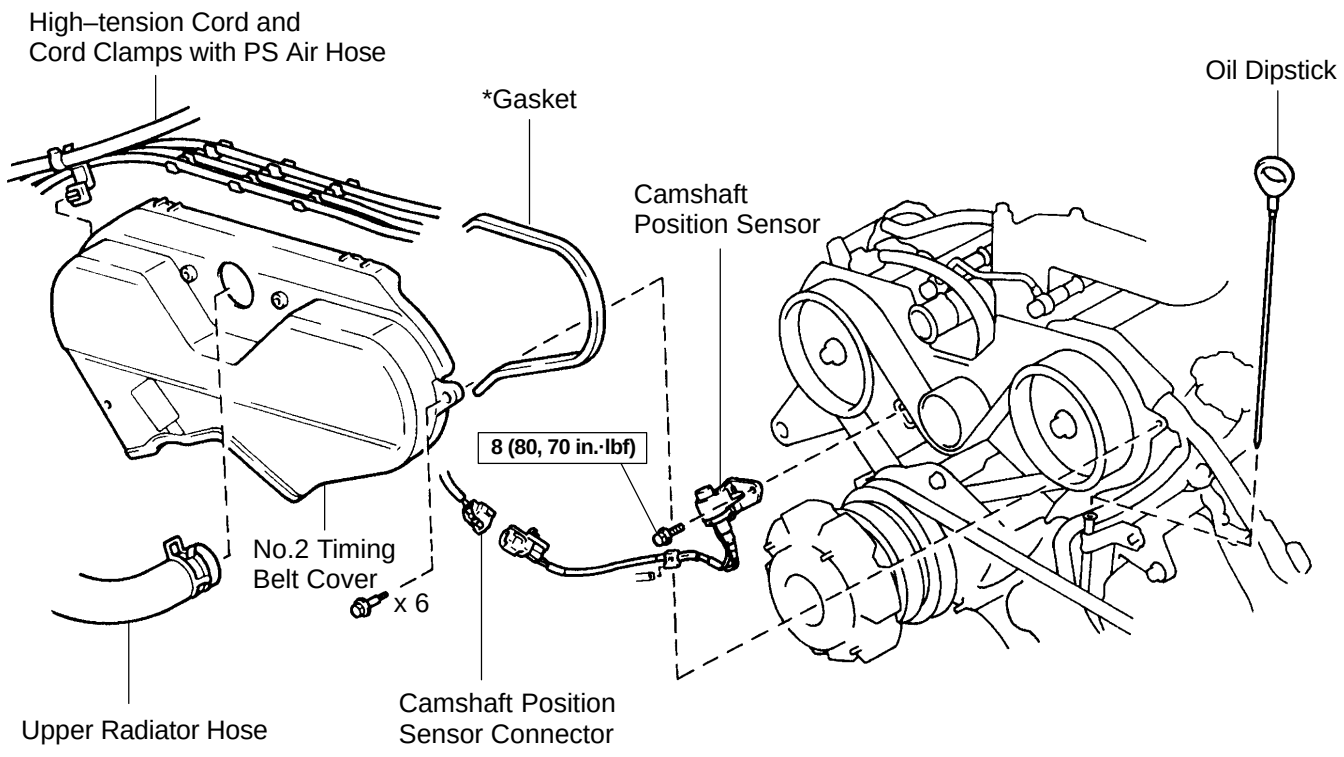

N·m (kgf·cm, ft·lbf) : Specified torque

* Replace only if damaged

S02422

IG03T–04

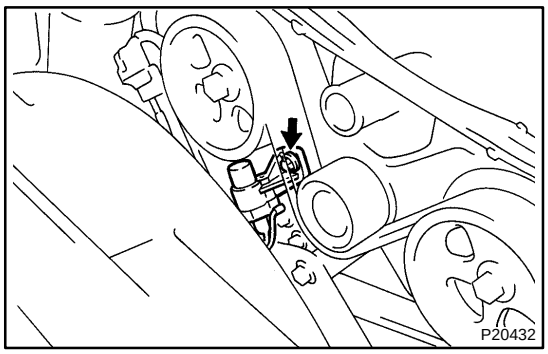

REMOVAL

1. REMOVE NO.2 TIMING BELT COVER
(See page EM–14)

2. REMOVE CAMSHAFT POSITION SENSOR

(a) Disconnect the camshaft position sensor connector.

(b) Remove the bolt and camshaft position sensor.

IG0EJ–02

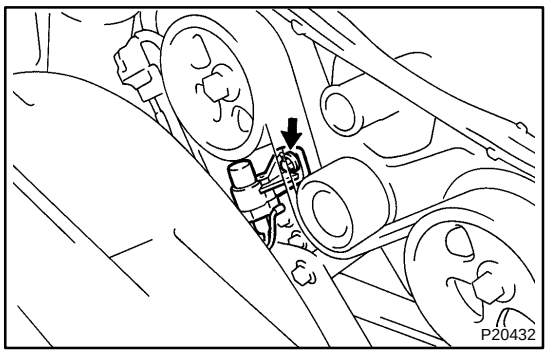

INSTALLATION

1. INSTALL CAMSHAFT POSITION SENSOR

(a) Install the camshaft position sensor with the bolt.
Torque: 8 N·m (80 kgf·cm, 70 in.·lbf)

(b) Connect the camshaft position sensor connector.

2. INSTALL NO.2 TIMING BELT COVER
(See page EM–20)

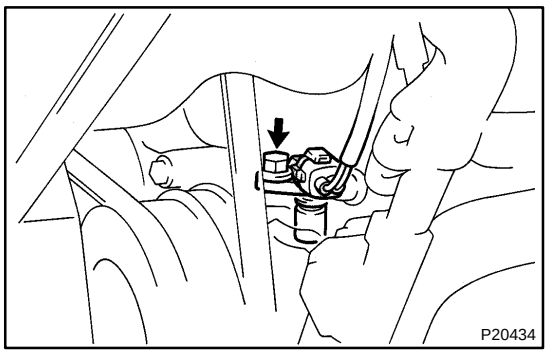

CRANKSHAFT POSITION SENSOR

IG03V–04

REMOVAL

1. REMOVE ENGINE UNDER COVER

2. REMOVE CRANKSHAFT POSITION SENSOR

(a) Disconnect the crankshaft position sensor connector.

(b) Remove the bolt and crankshaft position sensor.

IG03W–03

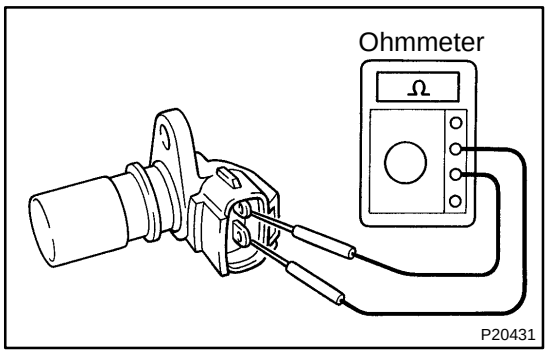

INSPECTION

NOTICE:

"Cold" and "Hot" in the following sentences express the temperature of the sensor itself. "Cold" is from –10˚C (14˚F) to 50˚C (122˚F) and "Hot" is from 50˚C (122˚F) to 100˚C (212˚F).

INSPECT CRANKSHAFT POSITION SENSOR RESISTANCE

Using an ohmmeter, measure the resistance between terminals.

Resistance:

Cold	1,630 – 2,740 Ω
Hot	2,065 – 3,225 Ω

If the resistance is not as specified, replace the crankshaft position sensor.

IG0EI–02

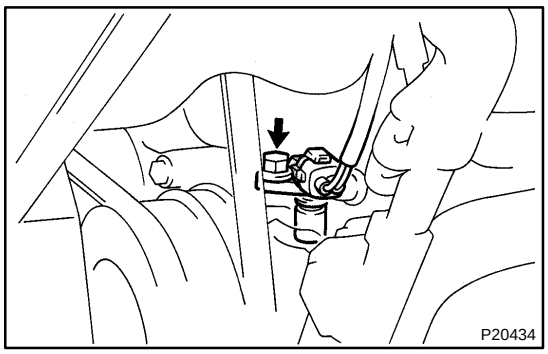

INSTALLATION

1. INSTALL CRANKSHAFT POSITION SENSOR

(a) Install the crankshaft position sensor with the bolt.
Torque: 8 N·m (80 kgf·cm, 70 in.·lbf)

(b) Connect the crankshaft position sensor connector.

2. INSTALL ENGINE UNDER COVER

IGNITION SYSTEM

IG0M9–01

ON–VEHICLE INSPECTION

NOTICE:

"Cold" and "Hot" in these sentences express the temperature of the coils themselves. "Cold" is from –10˚C (14˚F) to 50˚C (122˚F) and "Hot" is from 50˚C (122˚F) to 100˚C (212˚F).

1. INSPECT IGNITION COIL (WITH IGNITER) AND SPARK TEST

(a) Check that the spark occurs.

(b) Remove the ignition coils (with igniter) (See page IG–5).

(c) Remove the spark plugs.

(d) Install the spark plugs to each ignition coil (with igniter), and connect the ignition coil (with igniter) connector.

(e) Disconnect the 8 injector connectors.

(f) Ground the spark plug.

(g) Check that spark occurs while engine is being cranked.

NOTICE:

To prevent gasoline from being injected out of injectors during this test, crank the engine for no more than 5 – 10 seconds at a time.

If the spark does not occur, do the test as follows:

SPARK TEST

↓ NO

CHECK CONNECTION OF IGNITION COIL (WITH IGNITER) CONNECTOR → BAD → Connect securely.

↓ OK

CHANGE IT TO NORMAL IGNITION COIL (WITH IGNITER) AND PERFORM SPARK TEST AGAIN → OK → Replace ignition coil.

↓ NO

CHECK POWER SUPPLY TO IGNITION COIL (WITH IGNITER)
1. Turn ignition switch ON.
2. Check that there is battery positive voltage at ignition coil positive (+) terminal.

→ BAD → Check wiring between ignition switch and ignition coil.

↓ OK

CHECK RESISTANCE OF CAMSHAFT POSITION SENSOR (See step 3)

	Cold	Hot
Resistance:	835 – 1,400 Ω	1,060 – 1,645 Ω

→ BAD → Replace camshaft position sensor.

↓ OK

CHECK RESISTANCE OF CRANKSHAFT POSITION SENSOR (See IG–12)

	Cold	Hot
Resistance:	1,630 – 2,740 Ω	2,065 – 3,225 Ω

→ BAD → Replace crankshaft position sensor.

↓ OK

CHECK IGT SIGNAL FROM ECM (See page DI–292) → BAD → Check ECM (See page IN–27).

↓ OK

REPAIR WIRING BETWEEN IGNITION COIL AND ECM

(h) Using a 16 mm plug wrench, install the spark plugs.
Torque: 17.5 N·m (180 kgf·cm, 13 ft·lbf)
(i) Reinstall the ignition coils (with igniter).
(See page IG–6)

2. INSPECT SPARK PLUGS

(a) Remove the ignition coils (with igniter).
(See page IG–5)

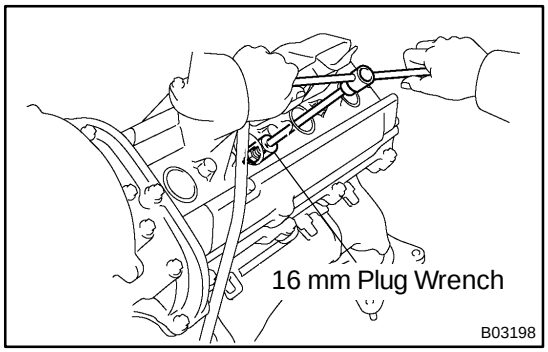

(b) Using a 16 mm plug wrench, remove the spark plugs.

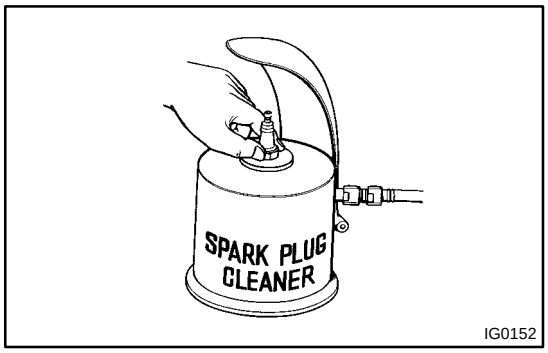

(c) Clean the spark plugs.
If the electrode has traces of wet carbon, allow it to dry and then clean with a spark plug cleaner.
Air pressure: Below 588 kPa (6 kgf/cm^2, 85 psi)
Duration: 20 seconds or less
HINT:
If there are traces of oil, remove it with gasoline before using the spark plug cleaner.

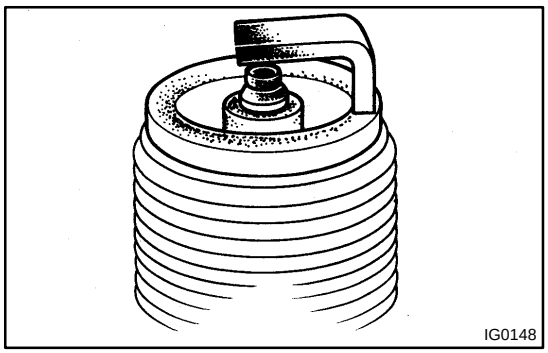

(d) Check the spark plug for thread damage and insulator damage.
If abnormal, replace the spark plug.
Recommended spark plug:

DENSO made	K20R–U
NGK made	BKR6EYA

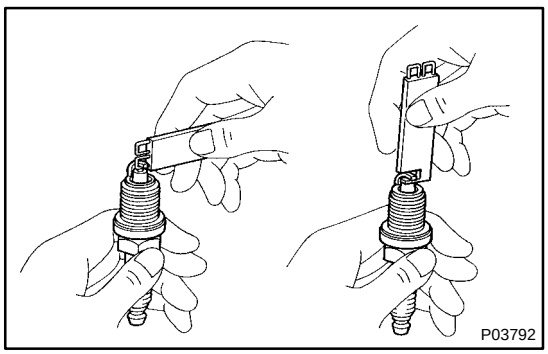

(e) Adjust the spark plug electrode gap.
Electrode gap: 0.8 mm (0.031 in.)
(f) Using a 16 mm plug wrench, install the spark plugs.
Torque: 17.5 N·m (180 kgf·cm, 13 ft·lbf)
(g) Reinstall the ignition coils (with igniter).
(See page IG–6)

3. INSPECT CAMSHAFT POSITION SENSOR

(a) Disconnect the camshaft position sensor connector.

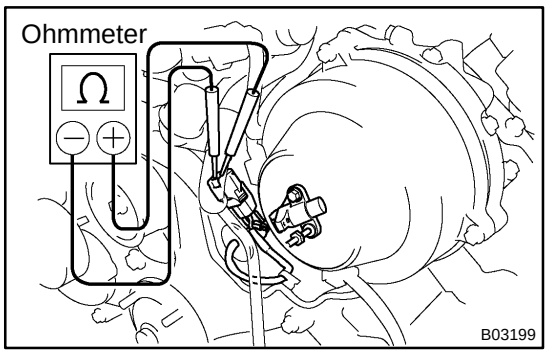

(b) Using an ohmmeter, measure the resistance between terminals.

Resistance:

Cold	835 – 1,400 Ω
Hot	1,060 – 1,645 Ω

If the resistance is not as specified, replace the camshaft position sensor.

(c) Reconnect the camshaft position sensor connector.

IGNITION COIL

COMPONENTS

IG08Q–05

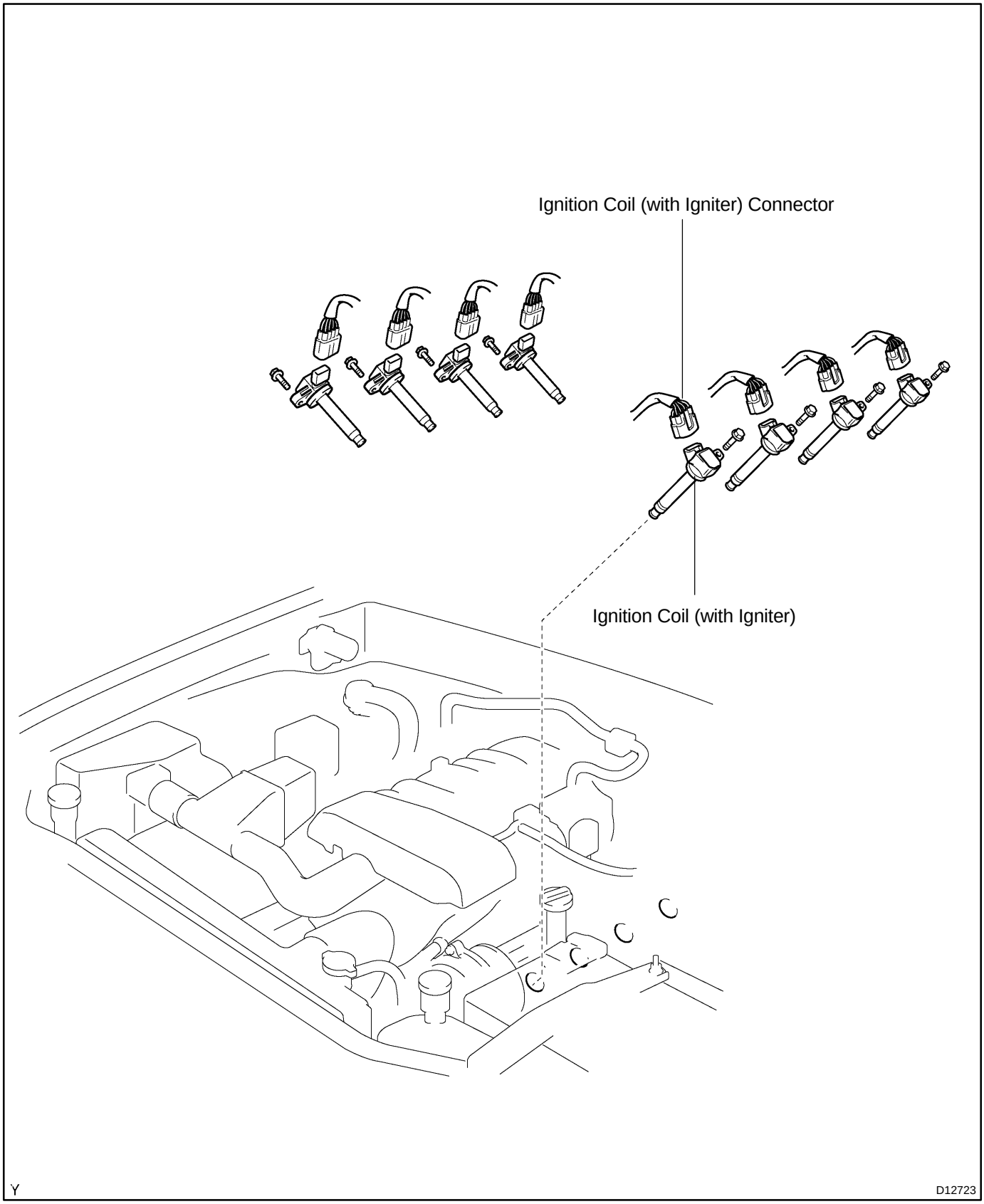

IG08R–04

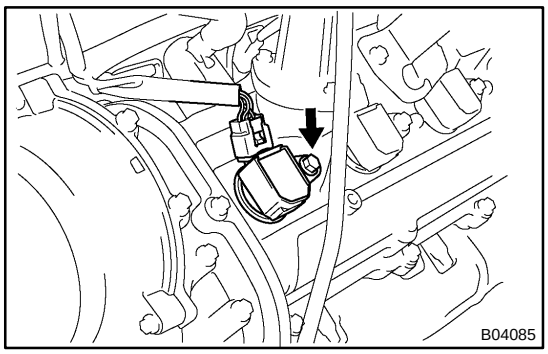

REMOVAL

1. **DISCONNECT IGNITION COIL (WITH IGNITER) CONNECTORS**
2. **REMOVE IGNITION COILS (WITH IGNITER) FROM SPARK PLUGS**

Remove the bolt, and pull out the ignition coil (with igniter). Remove the 8 ignition coils (with igniter).

IG0EN–03

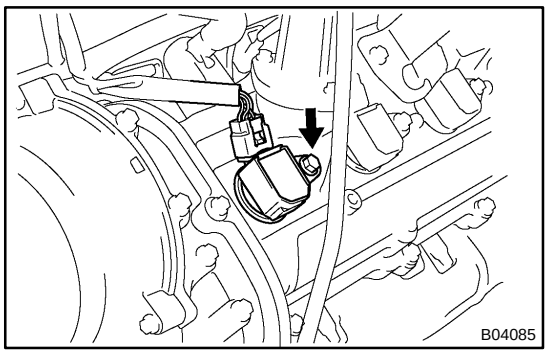

INSTALLATION

1. INSTALL IGNITION COILS (WITH IGNITER) TO SPARK PLUGS

Install the ignition coil (with igniter) with the bolt. Install the 8 ignition coils (with igniter).

Torque: 7.5 N·m (80 kgf·cm, 66 in.·lbf)

2. CONNECT IGNITION COIL (WITH IGNITER) CONNECTORS

CAMSHAFT POSITION SENSOR

IG08T–07

COMPONENTS

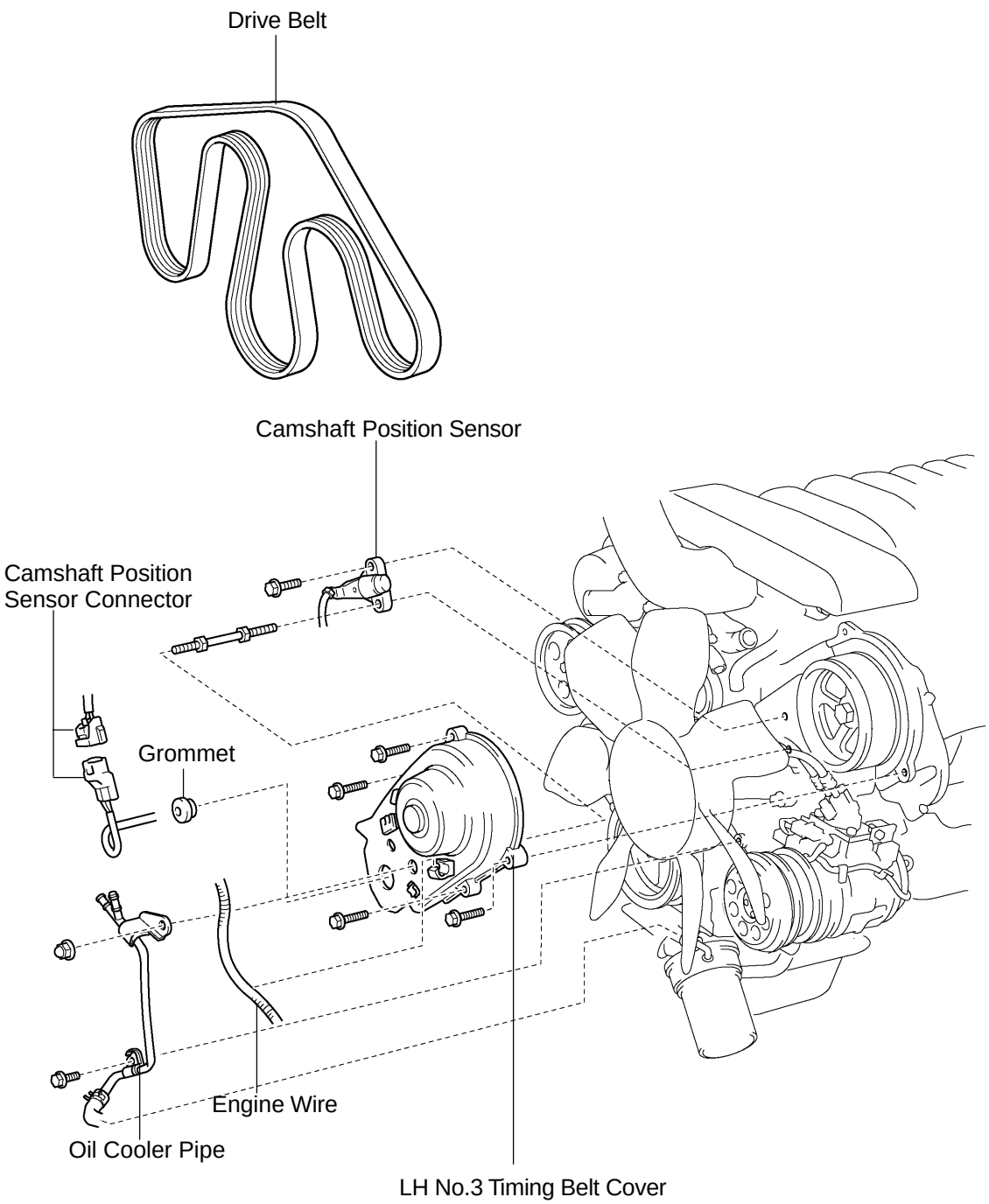

Y

B16584

IG08U–07

REMOVAL

1. DRAIN ENGINE COOLANT
2. REMOVE DRIVE BELT (See page CH–7 or CH–19)
3. REMOVE LH NO.3 TIMING BELT COVER (See page EM–14)

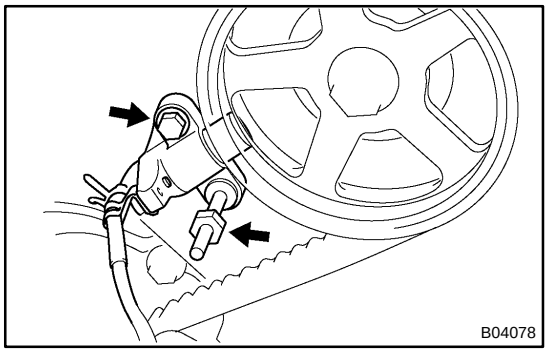

4. REMOVE CAMSHAFT POSITION SENSOR

Remove the bolt, stud bolt and camshaft position sensor.

IG08V–05

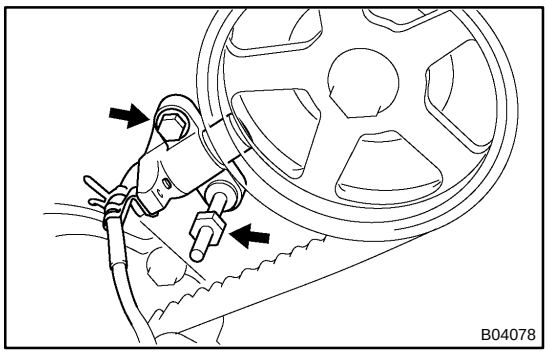

INSTALLATION

1. INSTALL CAMSHAFT POSITION SENSOR

Install the camshaft position sensor with the bolt and stud bolt

Torque: 7.5 N·m (80 kgf·cm, 66 in.·lbf)

2. INSTALL LH NO.3 TIMING BELT COVER (See page EM–21)

3. INSTALL DRIVE BELT (See page CH–16 or CH–28)

4. FILL ENGINE COOLANT (See page CO–2)

5. CHECK ENGINE COOLANT FOR LEAKS

6. CHECK IGNITION TIMING (See page EM–9)

CRANKSHAFT POSITION SENSOR

IG08W–05

COMPONENTS

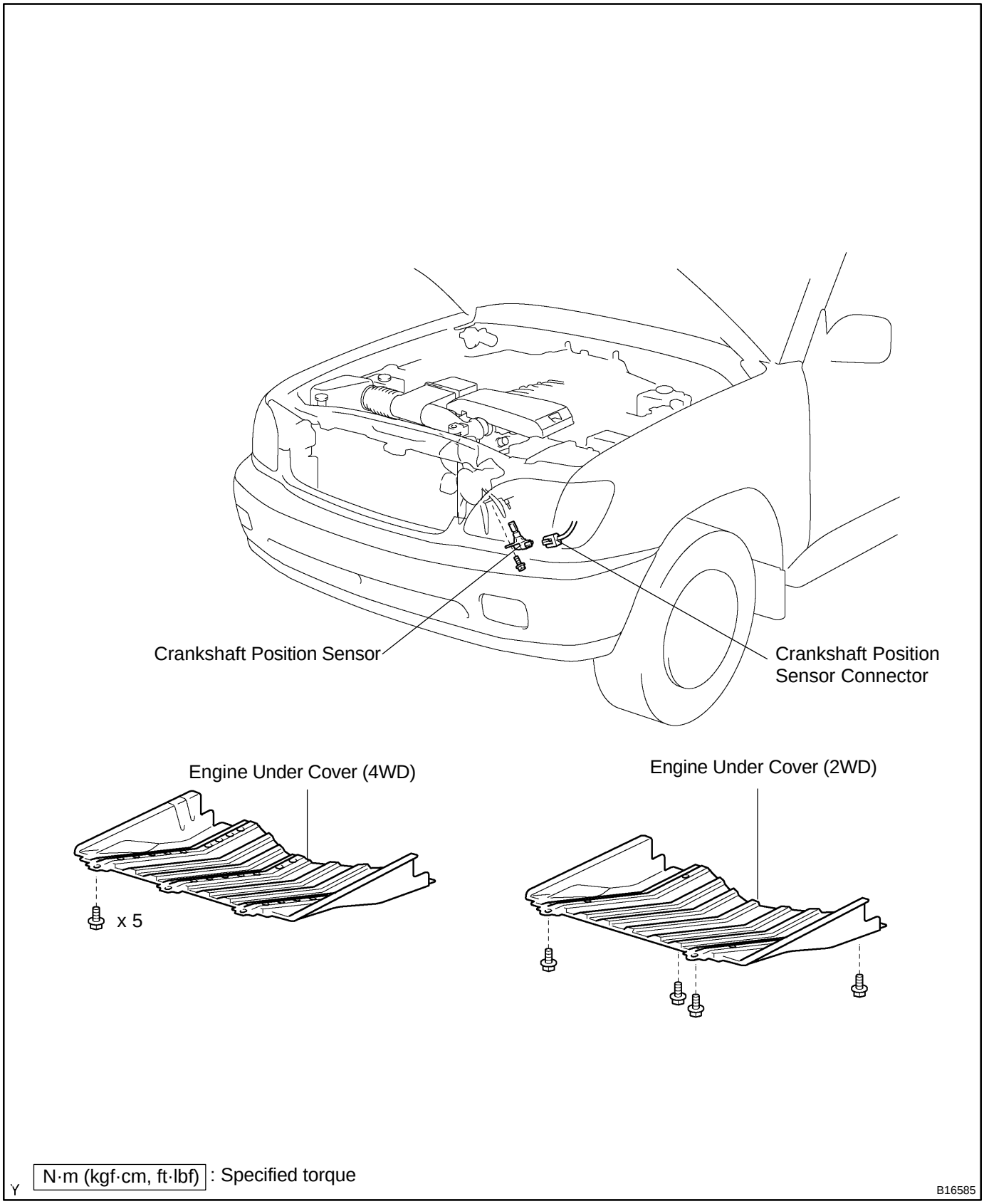

IG08X–04

REMOVAL

1. REMOVE ENGINE UNDER COVER

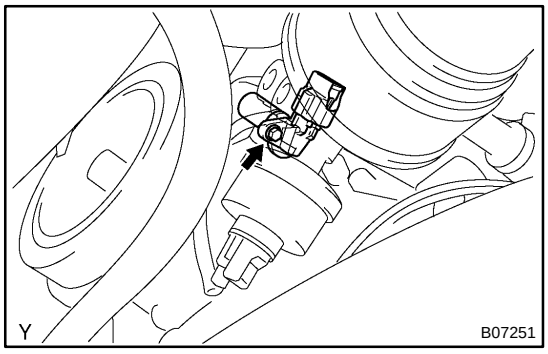

2. REMOVE CRANKSHAFT POSITION SENSOR

(a) Disconnect the crankshaft position sensor connector.

(b) Remove the bolt and crankshaft position sensor.

IG0EL–03

INSPECTION

NOTICE:

"Cold" and "Hot" in these sentences express the temperature of the coils themselves. "Cold" is from –10˚C (14˚F) to 50˚C (122˚F) and "Hot" is from 50˚C (122˚F) to 100˚C (212˚F).

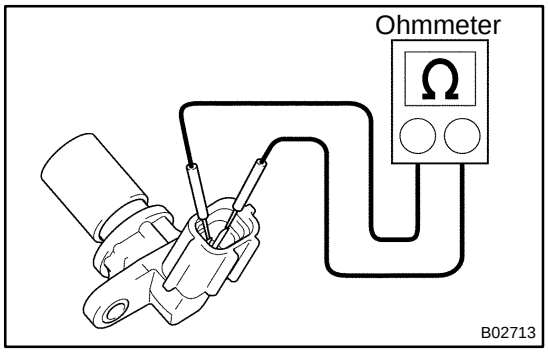

INSPECT CRANKSHAFT POSITION SENSOR

Using an ohmmeter, measure the resistance between the terminals.

Resistance:

Cold	1,630 – 2,740 Ω
Hot	2,065 – 3,225 Ω

If the resistance is not as specified, replace the crankshaft position sensor.

IG0EM–03

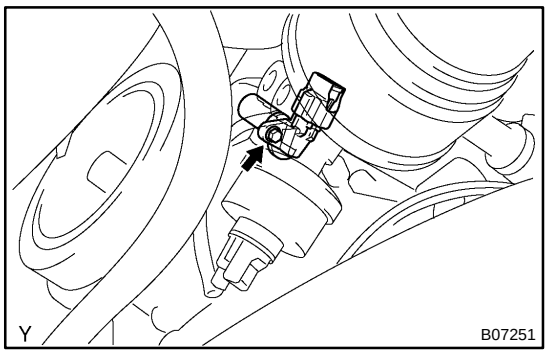

INSTALLATION

1. INSTALL CRANKSHAFT POSITION SENSOR

(a) Install the crankshaft position sensor with the bolt.
Torque: 6.5 N·m (65 kgf·cm, 58 in.·lbf)

(b) Connect the crankshaft position sensor connector.

2. INSTALL ENGINE UNDER COVER

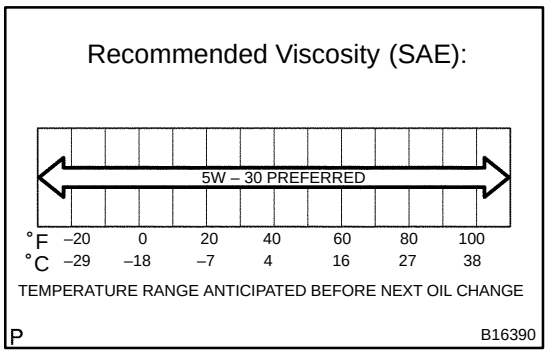

OIL AND FILTER

LU033–05

INSPECTION

1. CHECK ENGINE OIL QUALITY

Check the oil for deterioration, entry of water, discoloring or thinning.

If oil quality is visibly poor, replace it.

Oil grade:

API grade SL, Energy–Conserving or ILSAC multigrade engine oil. SAE 5W–30 is the best choice for your vehicle, for good fuel economy, and good starting in cold weather.

2. CHECK ENGINE OIL LEVEL

The oil level should be between the ”L” and ”F” marks on the dipstick.

3. CHECK OIL LEVEL

The oil level should be between the ”L” and ”F” marks on the level gauge. If low, check for leakage and add oil up to the ”F” mark.

If low, check for leakage and add oil up to the ”F” mark.

NOTICE:

Do not fill with engine oil above the ”F” mark.

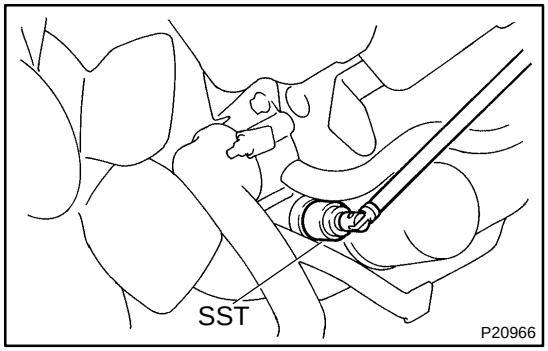

4. REMOVE OIL PRESSURE SWITCH

Using SST, remove the oil pressure switch.

SST 09816–30010

5. INSTALL OIL PRESSURE GAUGE

6. START ENGINE

Start the engine and warm it up to normal operating temperature.

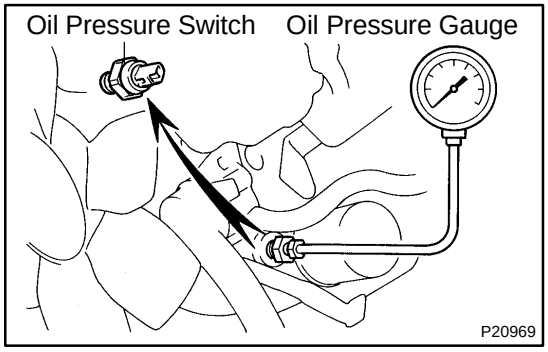

7. CHECK OIL PRESSURE

Oil pressure:

At idle speed	29 kPa (0.3 kgf/cm^2, 4.3 psi) or more
At 3,000 rpm	245 – 520 kPa (2.5 – 5.3 kgf/cm^2, 36 – 75 psi)

8. REMOVE OIL PRESSURE GAUGE

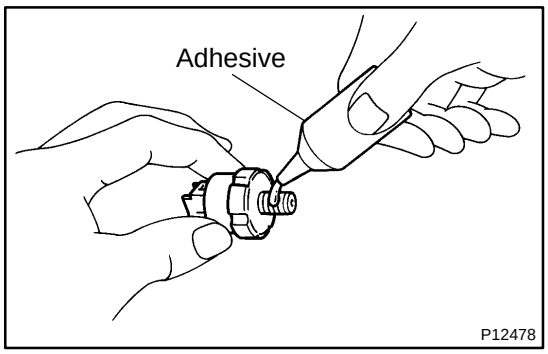

9. INSTALL OIL PRESSURE SWITCH

(a) Apply adhesive to 2 or 3 threads.
Adhesive:
Part No. 08833–00080, THREE BOND 1344, LOCTITE 242 or equivalent

(b) Using SST, install the oil pressure switch.
SST 09816–30010
Torque: 15 N·m (150 kgf·cm, 11 ft·lbf)

10. START ENGINE AND CHECK FOR LEAKS

LU0GU–02

REPLACEMENT

CAUTION:

- **Prolonged and repeated contact with mineral oil will result in the removal of natural fats from the skin, leading to dryness, irritation and dermatitis. In addition, used engine oil contains potentially harmful contaminants which may cause skin cancer.**
- **Care should be taken, therefore, when changing engine oil to minimize the frequency and length of time your skin is exposed to used engine oil. Protective clothing and gloves that cannot be penetrated by oil should be worn. The skin should be thoroughly washed with soap and water, or use water–less hand cleaner, to remove any used engine oil. Do not use gasoline, thinners, or solvents.**
- **In order to preserve the environment, used oil and used oil filters must be disposed of only at designated disposal sites.**

1. DRAIN ENGINE OIL

(a) Remove the oil filler cap.

(b) Remove the oil dipstick.

(c) Remove the oil drain plug and gasket, and drain the oil into a container.

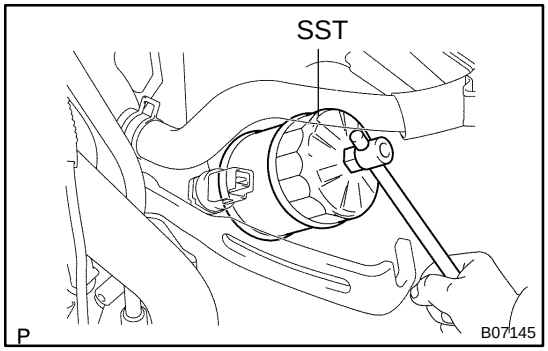

2. REPLACE OIL FILTER

(a) Using SST, remove the oil filter (located on left side of the cylinder block).
SST 09228–07501

(b) Clean the filter contact surface on the filter mounting.

(c) Apply clean engine oil to the gasket of a new oil filter.

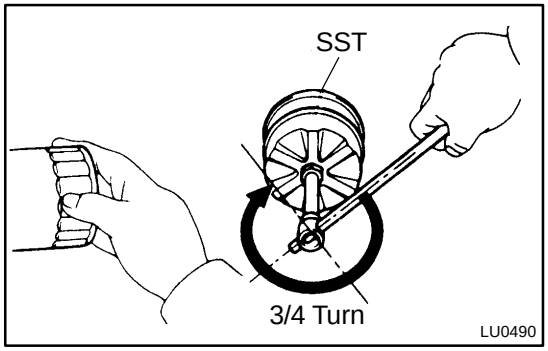

(d) Lightly screw the oil filter into place, and tighten it until the gasket contacts the seat.

(e) Using SST, tighten it an additional 3/4 turn to seat the filter.
SST 09228–07501

3. FILL WITH ENGINE OIL

(a) Clean and install the oil drain plug with a new gasket.
Torque: 37.5 N·m (383 kgf·cm, 28 ft·lbf)

(b) Fill the engine with fresh oil.

Capacity

Drain and refill	w/ Oil filter change	5.2 liters (5.5 US qts, 4.6 Imp. qts)
	w/o Oil filter change	4.9 liters (5.2 US qts, 4.3 Imp. qts)
Dry fill		5.9 liters (6.2 US qts, 5.2 Imp. qts)

(c) Reinstall the oil filler cap.

4. START ENGINE AND CHECK FOR LEAKS

5. RECHECK ENGINE OIL LEVEL

OIL PUMP

COMPONENTS

LU035–04

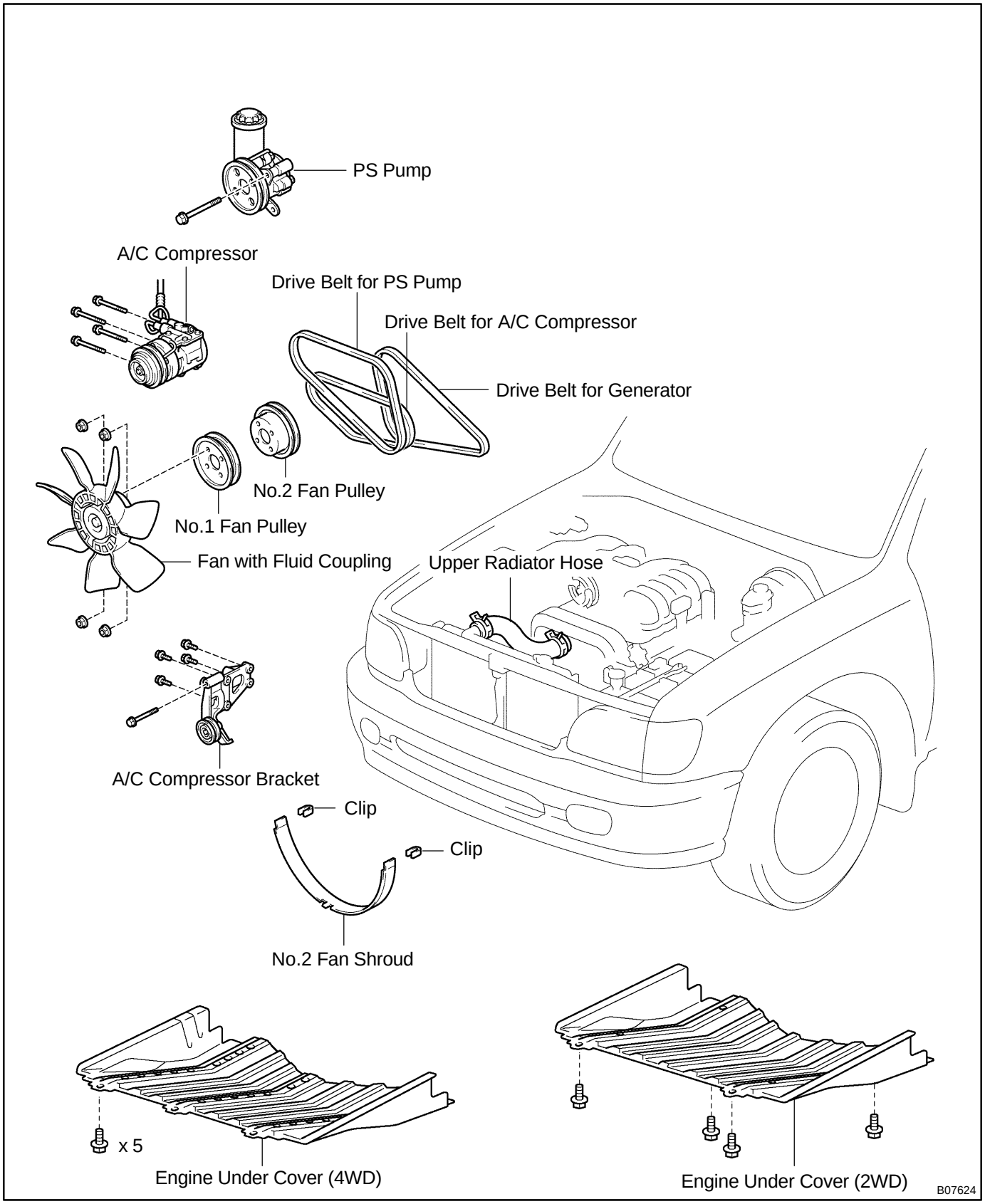

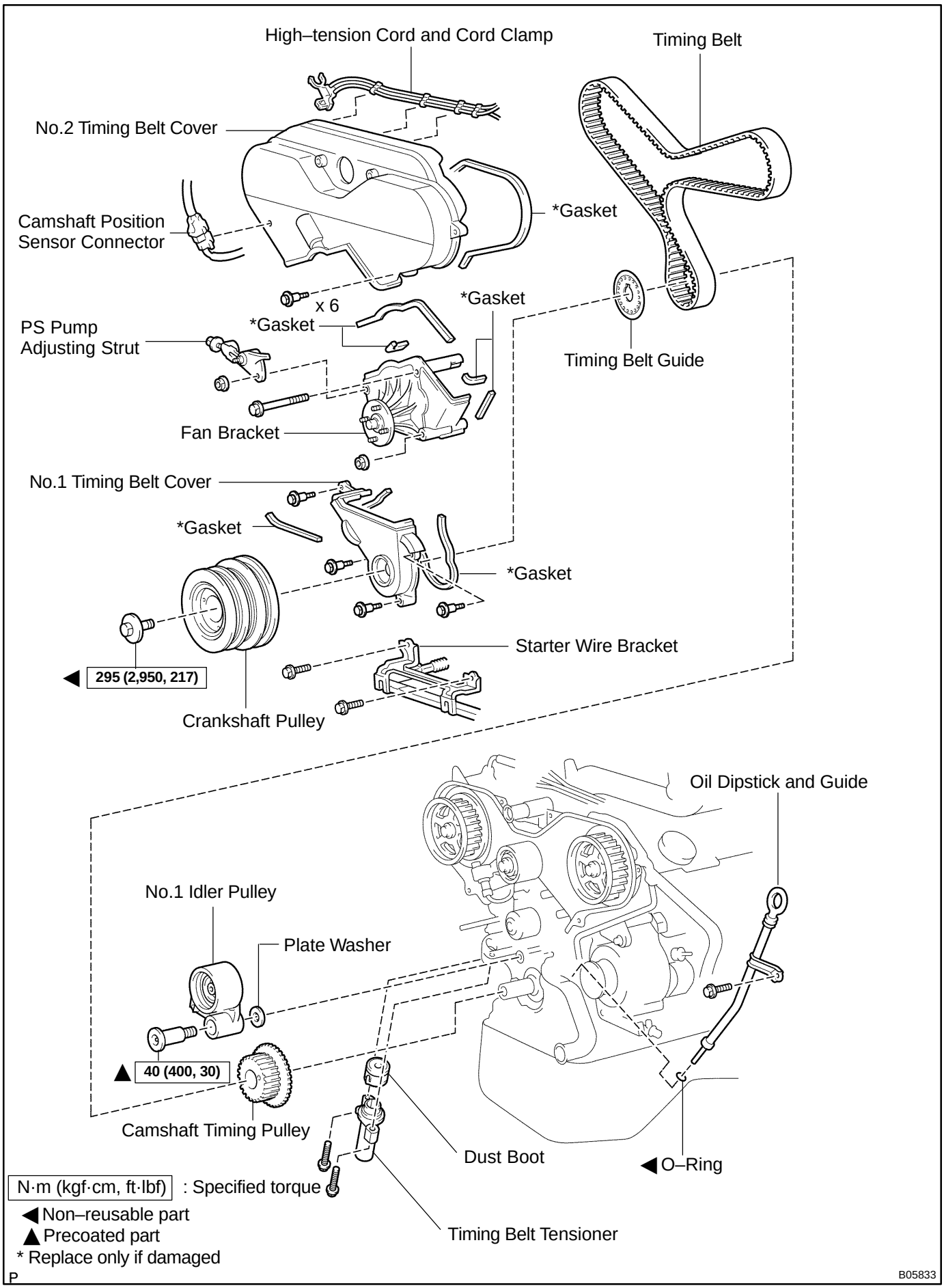
High–tension Cord and Cord Clamp
Timing Belt
No.2 Timing Belt Cover
*Gasket
Camshaft Position Sensor Connector
x 6
*Gasket
*Gasket
PS Pump Adjusting Strut
Timing Belt Guide
Fan Bracket
No.1 Timing Belt Cover
*Gasket
*Gasket
Starter Wire Bracket
◀ 295 (2,950, 217)
Crankshaft Pulley
Oil Dipstick and Guide
No.1 Idler Pulley
Plate Washer
▲ 40 (400, 30)
Camshaft Timing Pulley
Dust Boot
◀ O–Ring
N·m (kgf·cm, ft·lbf) : Specified torque
◀ Non–reusable part
▲ Precoated part
* Replace only if damaged
Timing Belt Tensioner
P
B05833

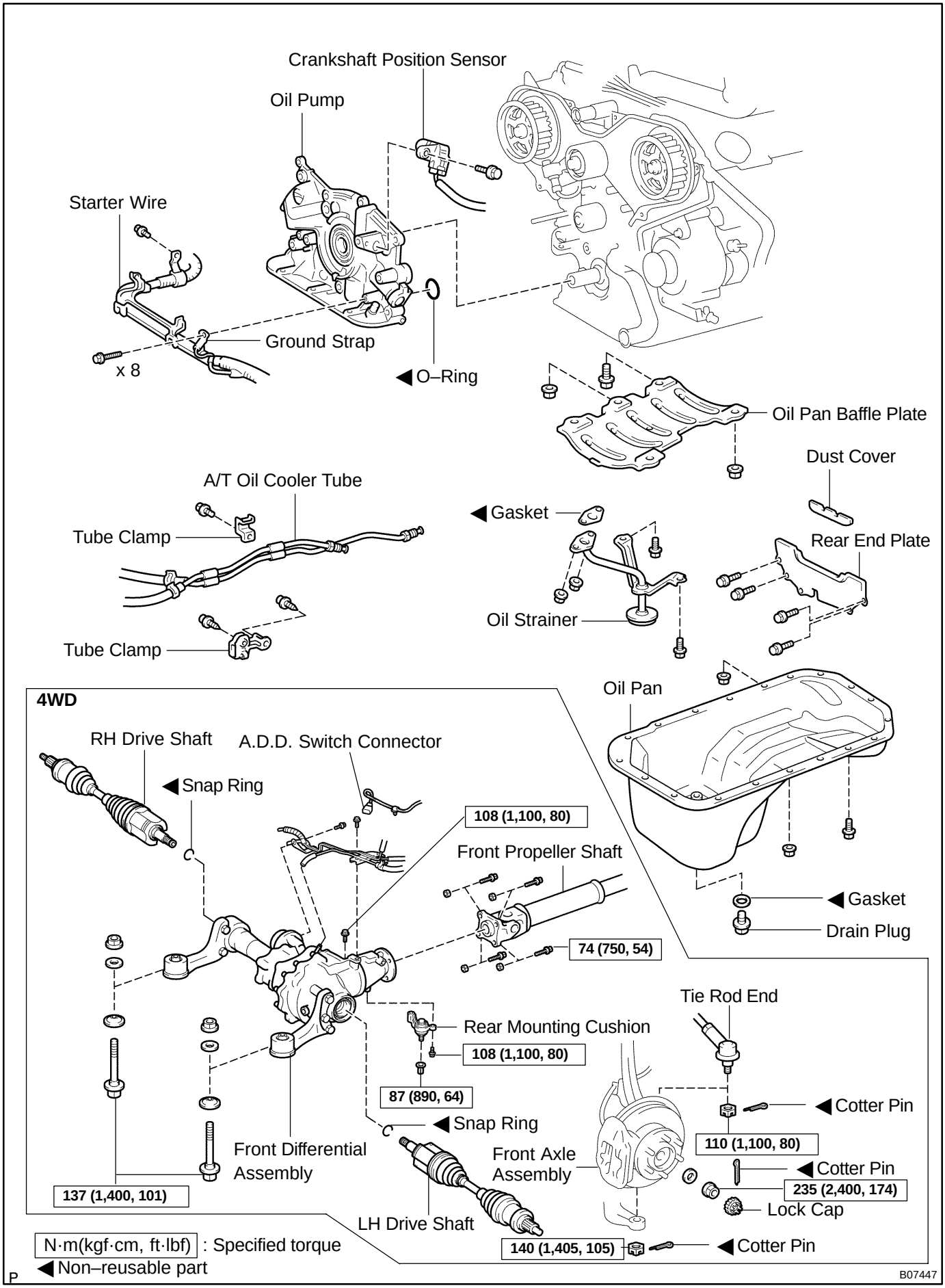
Crankshaft Position Sensor
Oil Pump
Starter Wire
Ground Strap
x 8
◀ O–Ring
Oil Pan Baffle Plate
Dust Cover
A/T Oil Cooler Tube
Tube Clamp
Tube Clamp
◀ Gasket
Oil Strainer
Rear End Plate
4WD
Oil Pan
RH Drive Shaft
A.D.D. Switch Connector
◀ Snap Ring
108 (1,100, 80)
Front Propeller Shaft
74 (750, 54)
◀ Gasket
Drain Plug
Tie Rod End
Rear Mounting Cushion
108 (1,100, 80)
87 (890, 64)
◀ Snap Ring
◀ Cotter Pin
110 (1,100, 80)
Front Differential Assembly
Front Axle Assembly
◀ Cotter Pin
235 (2,400, 174)
Lock Cap
137 (1,400, 101)
LH Drive Shaft
140 (1,405, 105)
◀ Cotter Pin
N·m(kgf·cm, ft·lbf) : Specified torque
◀ Non–reusable part
P
B07447

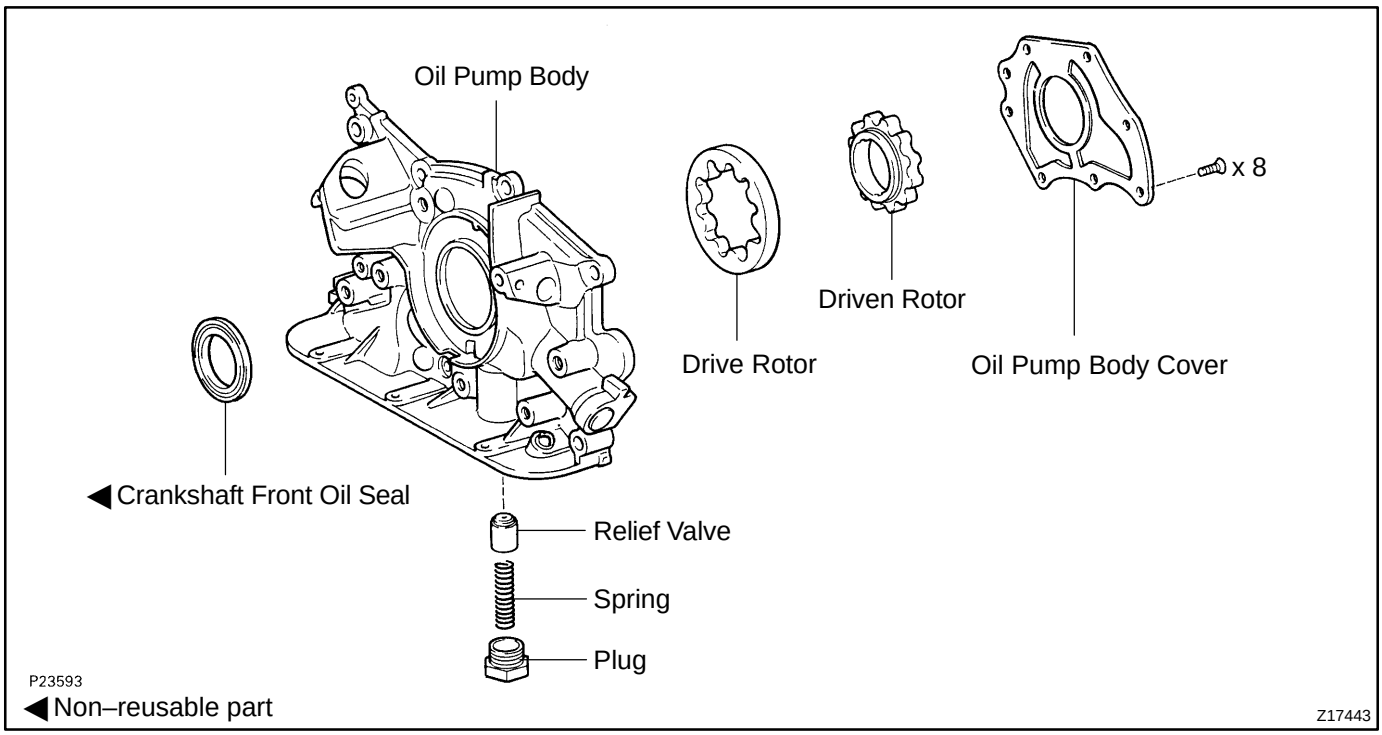
Oil Pump Body
x 8
Driven Rotor
Drive Rotor
Oil Pump Body Cover
◀Crankshaft Front Oil Seal
Relief Valve
Spring
Plug
P23593
◀Non–reusable part
Z17443

LU0GS–02

REMOVAL

HINT:

When repairing the oil pump, the oil pan and strainer should be removed and cleaned.

1. REMOVE OIL DIPSTICK AND GUIDE

(a) Remove the bolt, oil dipstick and guide.

(b) Remove the O–ring from the oil dipstick guide.

2. REMOVE TIMING BELT, NO.1 IDLER PULLEY AND CRANKSHAFT TIMING PULLEY (See page EM–14)

3. 4WD:
REMOVE FRONT DIFFERENTIAL (See page SA–30)

4. DRAIN ENGINE OIL

5. A/T:
REMOVE OIL COOLER TUBE AND CLAMP (See page AT–28)

6. REMOVE REAR END COVER AND DUST COVER

7. REMOVE CRANKSHAFT POSITION SENSOR (See page IG–12)

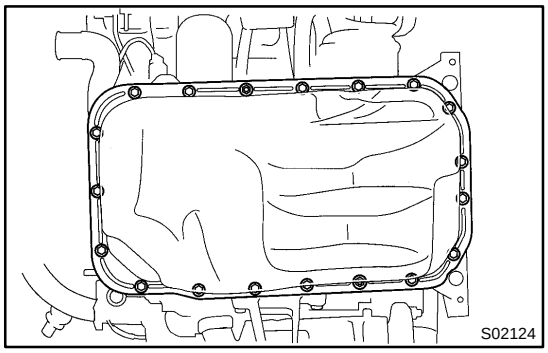

8. REMOVE OIL PAN

(a) Remove the 17 bolts and 2 nuts.

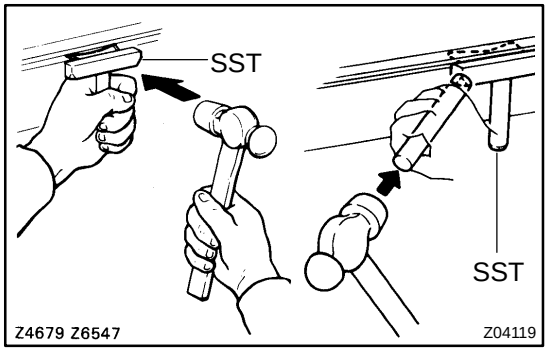

(b) Using SST and a brass bar, separate the oil pan from the cylinder block.
SST 09032–00100

HINT:

When removing the oil pan, be careful not to damage the oil pan flange.

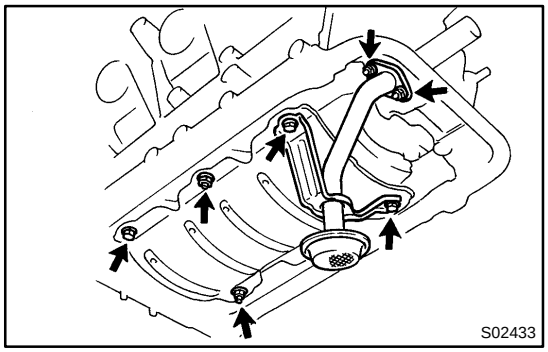

9. REMOVE OIL STRAINER

Remove the 2 bolts, 2 nuts, oil strainer and gasket.

10. REMOVE OIL PAN BAFFLE PLATE

Remove the bolt, 2 nuts and oil pan baffle plate.

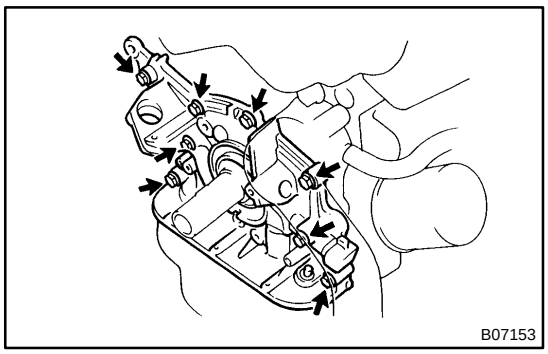

11. REMOVE OIL PUMP

(a) Remove the 8 bolts, ground strap and oil pump.

(b) Using a plastic–faced hammer, carefully tap the oil pump body.

(c) Remove the O–ring from the cylinder block.

LU037–04

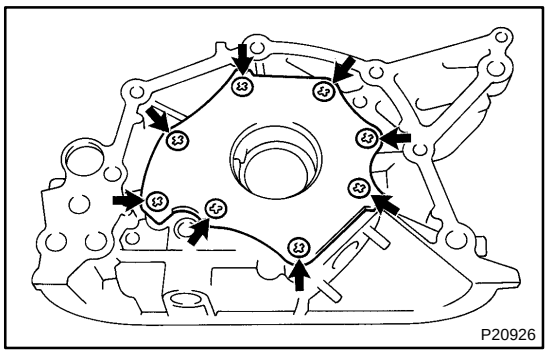

DISASSEMBLY

1. REMOVE DRIVEN AND DRIVE ROTORS

(a) Remove the 8 screws and pump body cover.

(b) Remove the drive and driven rotors.

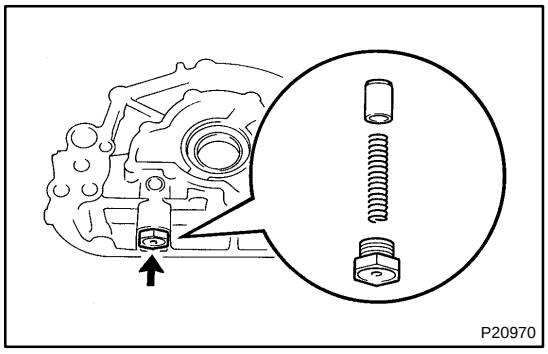

2. REMOVE RELIEF VALVE

(a) Unscrew the relief valve plug and gasket.

(b) Remove the spring and relief valve.

LU038–03

INSPECTION

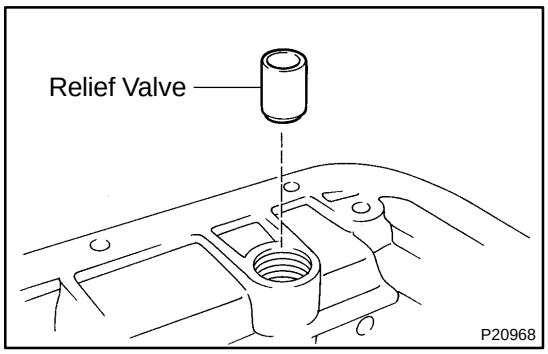

1. INSPECT RELIEF VALVE

Coat the relief valve with engine oil and check that it falls smoothly into the valve hole by its own weight.

If the valve does not fall smoothly, replace the valve and/or oil pump assembly.

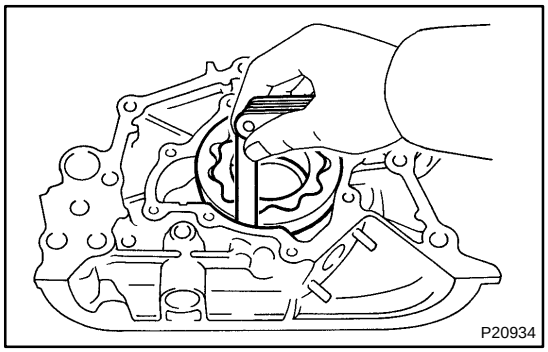

2. INSPECT BODY CLEARANCE

Using a feeler gauge, measure the clearance between the driven rotor and pump body.

Body clearance:

Standard	0.10 – 0.18 mm (0.0039 – 0.0069 in.)
Maximum	0.30 mm (0.0118 in.)

If the clearance is greater than the maximum, replace the oil pump rotor set and/or pump body.

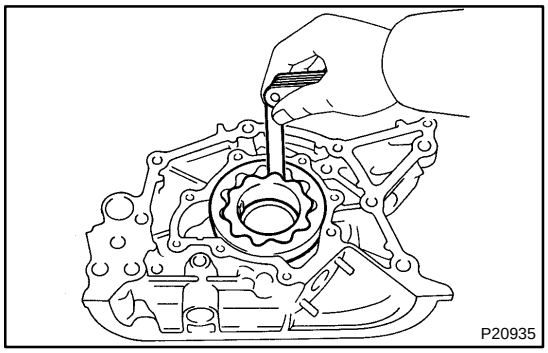

3. INSPECT TIP CLEARANCE

Using a feeler gauge, measure the clearance between the drive and driven rotors.

Tip clearance:

Standard	0.11 – 0.24 mm (0.0043 – 0.0094 in.)
Maximum	0.35 mm (0.0138 in.)

If the clearance is greater than the maximum, replace the oil pump rotor set.

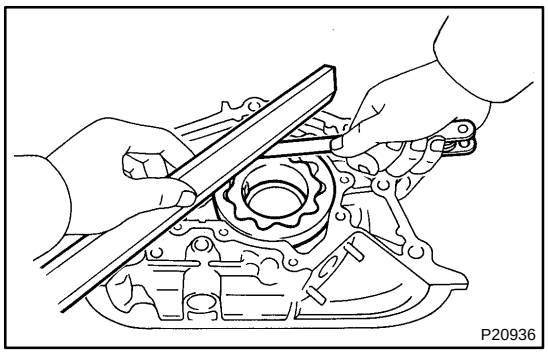

4. INSPECT SIDE CLEARANCE

Using a feeler gauge and precision straight edge, measure the side clearance, as shown.

Side clearance:

Standard	0.03 – 0.09 mm (0.0012 – 0.0035 in.)
Maximum	0.15 mm (0.0059 in.)

If the clearance is greater than the maximum, replace the oil pump rotor set and/or pump body.

LU039–04

REPLACEMENT

REPLACE CRANKSHAFT FRONT OIL SEAL

HINT:

There are 2 methods ((a) and (b)) to replace the oil seal, which are as follows:

(a) If oil pump is removed from cylinder block:

(1) Using a screwdriver, pry out the oil seal.

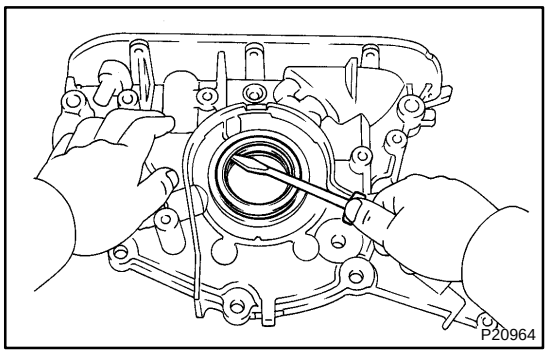

(2) Using SST and a hammer, tap in a new oil seal until its surface is flush with the oil pump body edge.

SST 09309–37010

(3) Apply MP grease to the oil seal lip.

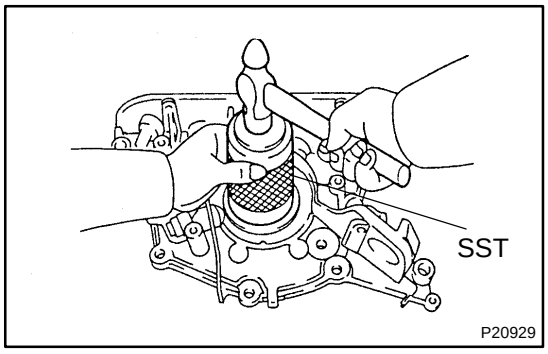

(b) If oil pump is installed to the cylinder block:

(1) Using a knife, cut off the oil seal lip.

(2) Using a screwdriver, pry out the oil seal.

NOTICE:

Be careful not to damage the crankshaft. Tape the screwdriver tip.

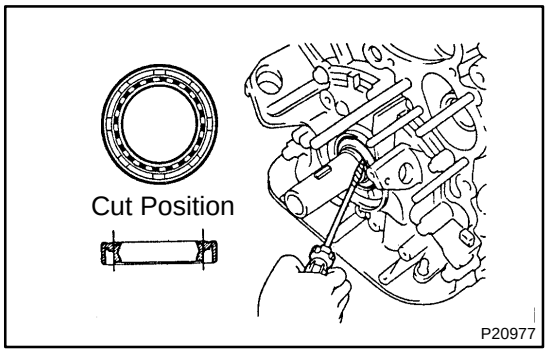

(3) Apply MP grease to a new oil seal lip.

(4) Using SST and a hammer, tap in the oil seal until its surface is flush with the oil pump body edge.

SST 09309–37010

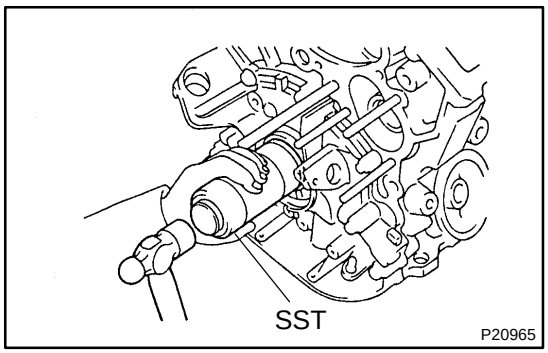

LU0GT–02

REASSEMBLY

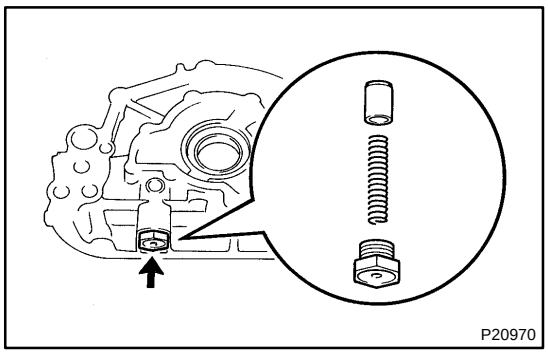

1. INSTALL RELIEF VALVE

Install the relief valve, spring and plug.

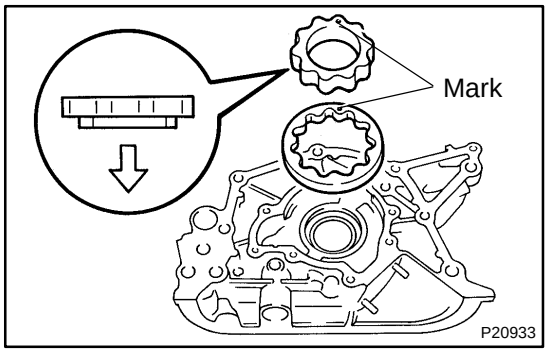

2. INSTALL DRIVEN AND DRIVE ROTORS

(a) Place the drive and driven rotors into the pump body with the marks facing the pump body cover side.

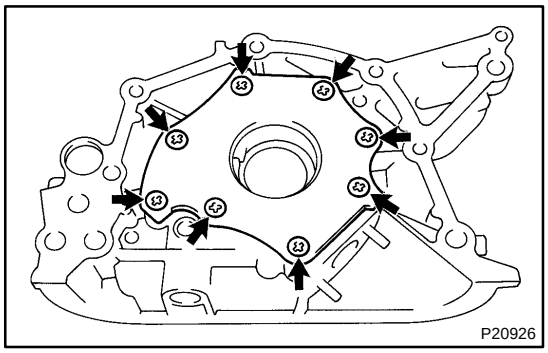

(b) Install the pump body cover with the 8 bolts.
Torque: 10 N·m (105 kgf·cm, 8 ft·lbf)

LU03B–05

INSTALLATION

1. INSTALL OIL PUMP

(a) Remove any old packing (FIPG) material and be careful not to drop any oil on the contact surfaces of the oil pump and cylinder block.

- ▲ Using a razor blade and gasket scraper, remove all the old packing (FIPG) material from the gasket surfaces and sealing grooves.
- ▲ Thoroughly clean all components to remove all the loose material.
- ▲ Using a non–residue solvent, clean both sealing surfaces.

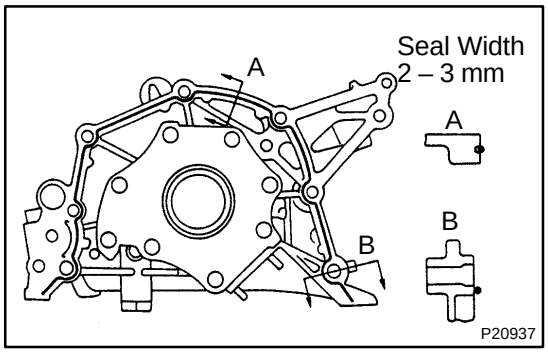

(b) Apply seal packing to the oil pump as shown in the illustration.

Seal packing: Part No. 08826–00080 or equivalent

NOTICE:

Avoid applying an excessive amount to the surface. Be particularly careful near oil passage.

- ▲ Install nozzle that has been cut to a 2 – 3 mm (0.08 – 0.12 in.) opening.
- ▲ Parts must be assembled within 5 minutes of application. Otherwise the material must be removed and reapplied.
- ▲ Immediately remove nozzle from the tube and reinstall cap.

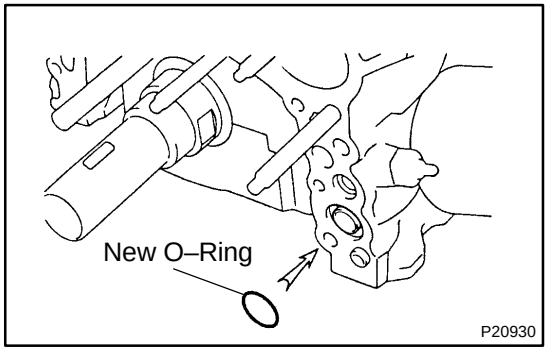

(c) Place a new O–ring into the groove of cylinder block.

HINT:

Apply engine oil to the O–ring.

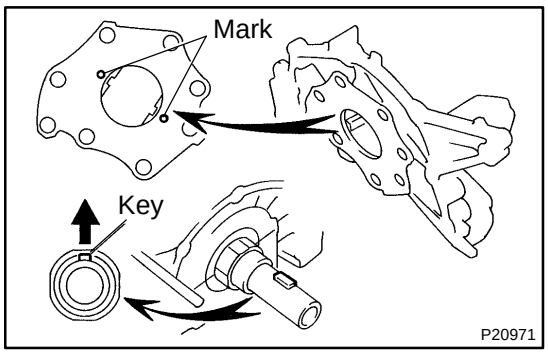

(d) Install the oil pump to the crankshaft with the spline teeth of the drive rotor engaged with the large teeth of the crankshaft.

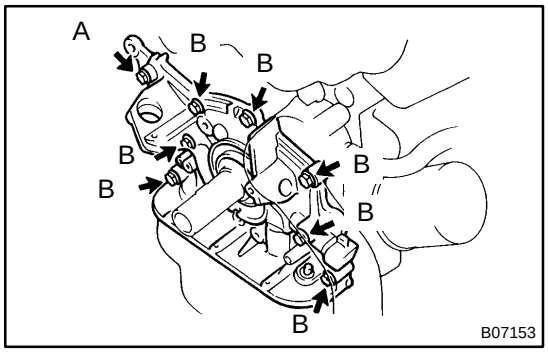

(e) Install the oil pump and ground strap with the 8 bolts.
Torque:
20 N·m (200 kgf·cm, 15 ft·lbf) for 14 mm head bolt A
42 N·m (420 kgf·cm, 31 ft·lbf) for 12 mm head bolt B

2. INSTALL CRANK SHAFT POSITION SENSOR
(See page IG–14)

3. INSTALL OIL PAN BAFFLE PLATE

Install the oil pan baffle plate with the bolt and 2 nuts.
Torque: 7.5 N·m (75 kgf·cm, 66 in.·lbf)

4. INSTALL OIL STRAINER

(a) Place a new gasket to the oil pump.
(b) Install the oil strainer with the 2 bolts and 2 nuts.
Torque: 7.5 N·m (75 kgf·cm, 66 in.·lbf)

5. INSTALL OIL PAN

(a) Remove any old packing (FIPG) material and be careful not to drop any oil on the contacting surfaces of the oil pan and cylinder block.
- ▲ Using a razor blade and gasket scraper, remove all the remaining seal packing (FIPG) material from the gasket surfaces.
- ▲ Thoroughly clean all components to remove all the loose material.
- ▲ Using a non–residue solvent, clean both sealing surfaces.

NOTICE:
Do not use a solvent which will affect the painted surfaces.

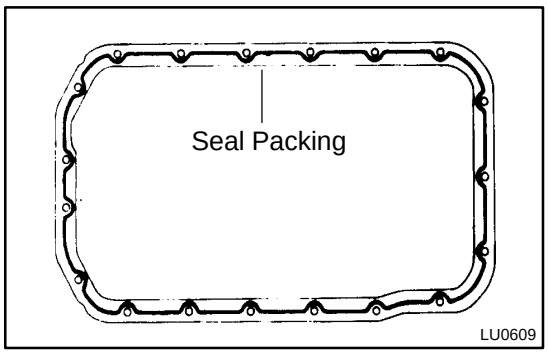

(b) Apply seal packing to the oil pan as shown in the illustration.

Seal packing: Part No. 08826–00080 or equivalent

▲ Install a nozzle that has been cut to a 3 – 4 mm (0.12 – 0.16 in.) opening.

NOTICE:

Avoid applying an excess amount to the surface.

▲ If parts are not assembled within 5 minutes of applying the seal packing, the effectiveness of the seal packing is lost and the seal packing must be removed and reapplied.

▲ Immediately remove the nozzle from the tube and reinstall the cap after using the seal packing.

(c) Install the oil pan with the 2 nuts and 17 bolts.

Torque: 7.6 N·m (78 kgf·cm, 67 in.·lbf)

6. INSTALL REAR END COVER AND DUST COVER

7. A/T:

INSTALL OIL COOLER TUBE AND CLAMP

(See page AT–32)

8. INSTALL CRANKSHAFT TIMING PULLEY, NO.1 IDLER PULLEY AND TIMING BELT (See page EM–20)

9. 4WD:

INSTALL FRONT DIFFERENTIAL (See page EM–20)

10. INSTALL OIL DIPSTICK AND GUIDE

(a) Install a new O–ring to the oil dipstick guide.

(b) Apply soapy water to the O–ring.

(c) Push in the oil dipstick guide end into the guide hole of the oil pump.

(d) Install the oil dipstick guide to the generator bracket with the bolt.

Torque: 8 N·m (80 kgf·cm, 70 in.·lbf)

11. FILL WITH ENGINE OIL

12. START ENGINE AND CHECK FOR LEAKS

13. INSTALL ENGINE UNDER COVER

14. RECHECK ENGINE OIL LEVEL

OIL COOLER

COMPONENTS

LU03C–04

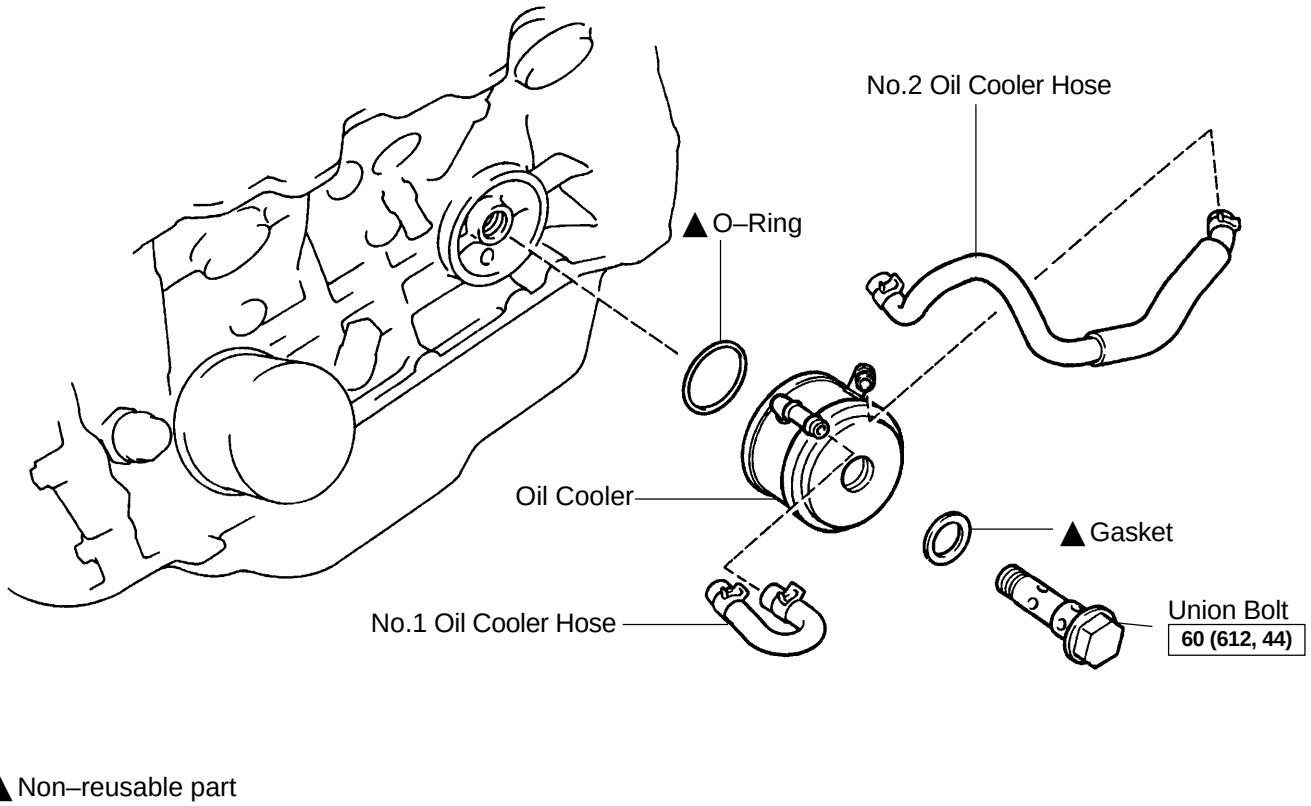

▲ Non–reusable part

N·m (kgf·cm, ft·lbf) : Specified torque

S02431

LU03D–04

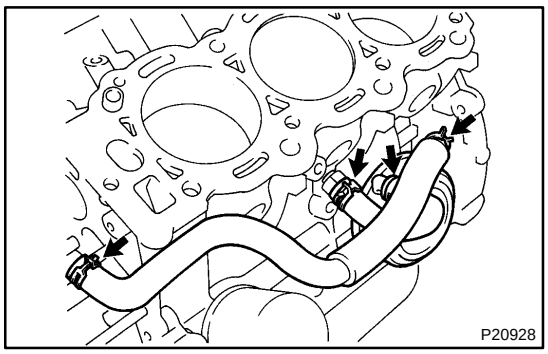

REMOVAL

1. DRAIN ENGINE COOLANT

2. REMOVE OIL COOLER HOSES

Remove the No.1 and No.2 oil cooler hoses.

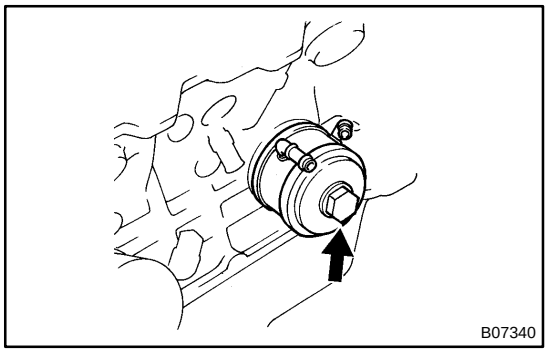

3. REMOVE OIL COOLER

Remove the union bolt, gasket, oil cooler and O–ring.

LU03E–02

INSPECTION

INSPECT OIL COOLER

Check the oil cooler for damage or clogging.
If necessary, replace the oil cooler.

LU0GR–02

INSTALLATION

1. INSTALL OIL COOLER

(a) Clean the oil cooler contact surface on the oil cooler mounting.

(b) Place a new O–ring to the oil cooler.

(c) Apply a light coat of engine oil on the threads and under the head of the union bolt.

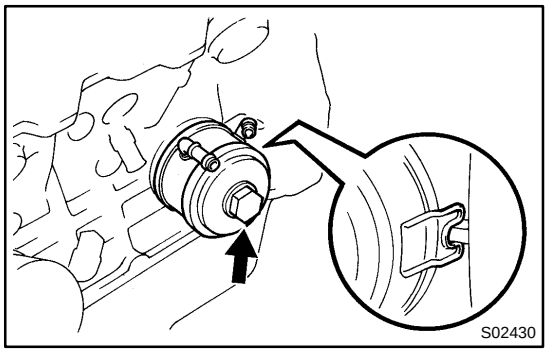

(d) Install the oil cooler and a new gasket with the union bolt.
Torque: 60 N·m (612 kgf·cm, 44 ft·lbf)

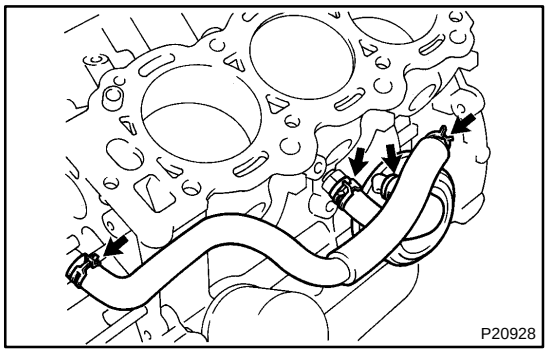

2. CONNECT OIL COOLER HOSES

Connect the No.1 and No.2 oil cooler hoses.

3. FILL WITH ENGINE COOLANT

4. START ENGINE AND CHECK FOR COOLANT AND ENGINE OIL LEAKS

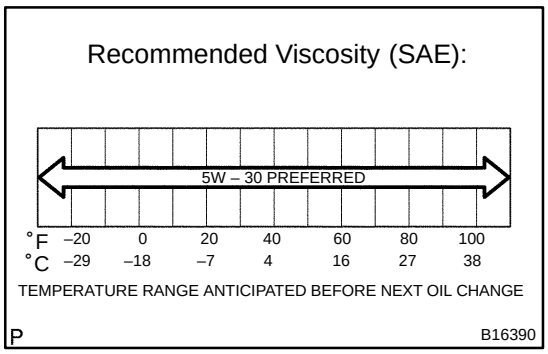

OIL AND FILTER

LU0GV–03

INSPECTION

1. CHECK ENGINE OIL QUALITY

Check the oil for deterioration, entry of water, discoloring or thinning.

If the quality is visibly poor, replace the oil.

Oil grade:

Use API SL, Energy–Conserving or ILSAC multigrade engine oil. SAE 5W–30 is the best choice for your vehicle, for good fuel economy, and good starting in cold weather.

2. CHECK ENGINE OIL LEVEL

The oil level should be between the ”L” and ”F” marks on the dipstick.

If low, check for leakage and add oil up to the ”F” mark.

NOTICE:

Do not fill with engine oil above the ”F” mark.

3. REMOVE ENGINE UNDER COVER

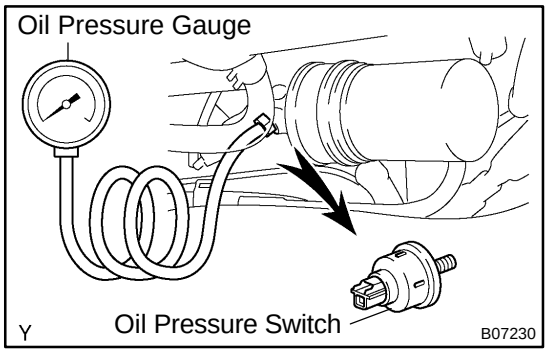

4. REMOVE OIL PRESSURE SWITCH

5. INSTALL OIL PRESSURE GAUGE

6. WARM UP ENGINE

Allow the engine to warm up to normal operating temperature.

7. CHECK OIL PRESSURE

Oil pressure:

At idle	29 kPa (0.3 kgf/cm^2, 4.2 psi) or more
At 3,000 rpm	294 – 588 kPa (3.0 – 6.0 kgf/cm^2, 43 – 85 psi)

8. REMOVE OIL PRESSURE GAUGE

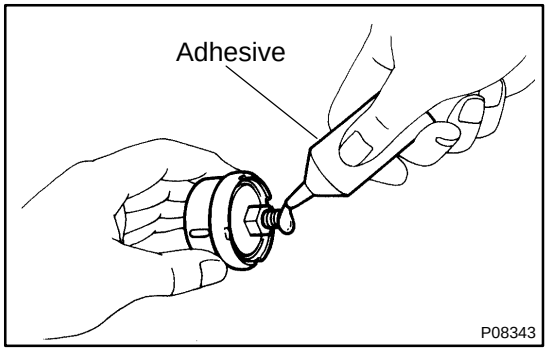

9. REINSTALL OIL PRESSURE SWITCH

(a) Apply adhesive to 2 or 3 threads of the oil pressure switch.

Adhesive:

Part No. 08833–00080, THREE BOND 1344, LOCTITE 242 or equivalent

(b) Reinstall the oil pressure switch.

10. START ENGINE, AND CHECK FOR ENGINE OIL LEAKS

11. REINSTALL ENGINE UNDER COVER

LU0GW–05

REPLACEMENT

CAUTION:

- **Prolonged and repeated contact with mineral oil will result in the removal of natural fats from the skin, leading to dryness, irritation and dermatitis. In addition, used engine oil contains potentially harmful contaminants which may cause skin cancer.**
- **Care should be taken, therefore, when changing engine oil to minimize the frequency and length of time your skin is exposed to used engine oil. Protective clothing and gloves that cannot be penetrated by oil should be worn. The skin should be thoroughly washed with soap and water, or use water–less hand cleaner, to remove any used engine oil. Do not use gasoline, thinners, or solvents.**
- **In order to preserve the environment, used oil and used oil filters must be disposed of only at designated disposal sites.**

1. w/ Oil filter change:
REMOVE ENGINE UNDER COVER

2. DRAIN ENGINE OIL

(a) Remove the oil filler cap.

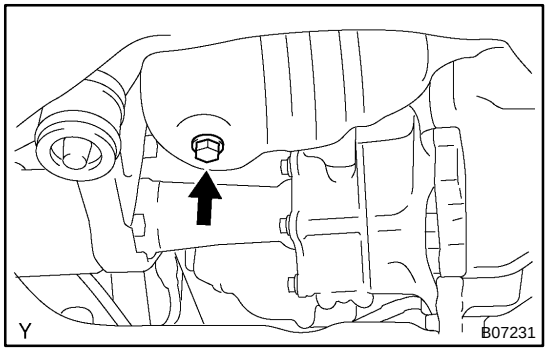

(b) Remove the oil drain plug and gasket, and drain the oil into a container.

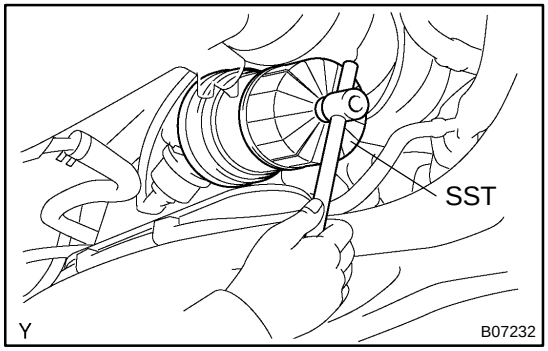

3. REPLACE OIL FILTER

(a) Using SST, remove the oil filter.
SST 09228–07501

(b) Clean the oil filter contact surface on the oil filter mounting.

(c) Lubricate the filter rubber gasket with clean engine oil.

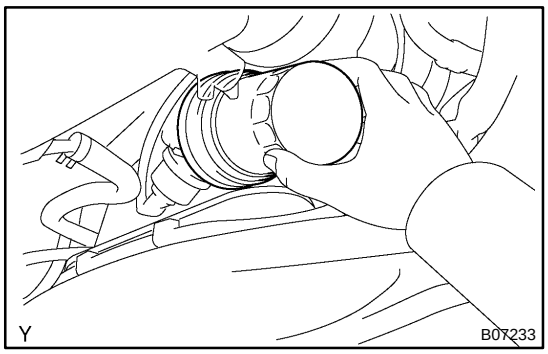

(d) Tighten the oil filter by hand until the rubber gasket contacts the seat of the filter mounting.

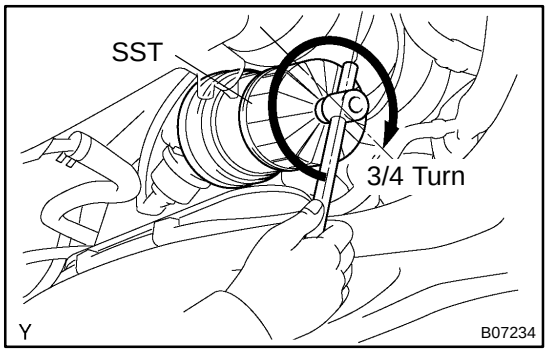

(e) Using SST, give it an additional 3/4 turn to seat the filter.
SST 09228–07501

4. REFILL WITH ENGINE OIL

(a) Clean and install the oil drain plug with a new gasket.
Torque: 39 N·m (400 kgf·cm, 29 ft·lbf)

(b) Fill with fresh engine oil.
Capacity:

Drain and refill	w/ Oil filter change	6.2 liters (6.5 Us qts, 5.5 Imp. qts)
	w/o Oil filter change	5.7 liters (6.0 Us qts, 5.0 Imp. qts)
Dry fill		7.1 liters (7.5 Us qts, 6.2 Imp. qts)

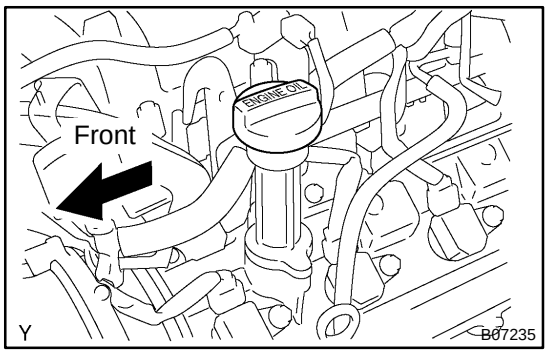

(c) Reinstall the oil filler cap.

HINT:

Install the oil filler cap facing the direction as shown in the illustration.

5. START ENGINE AND CHECK FOR ENGINE OIL LEAKS

6. RECHECK ENGINE OIL LEVEL

7. w/ Oil filter change:
REINSTALL ENGINE UNDER COVER

OIL PUMP

COMPONENTS

LU08P–06

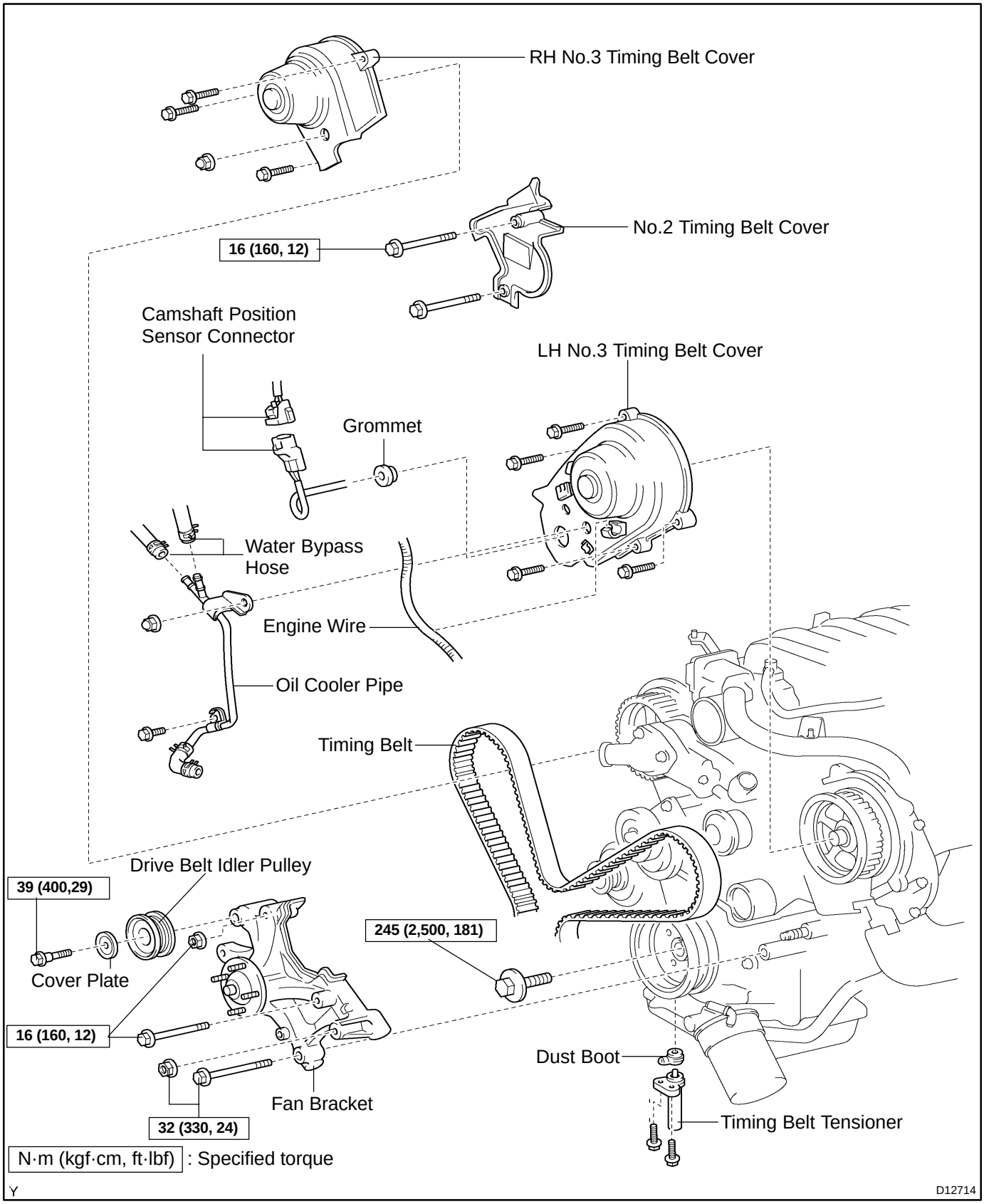

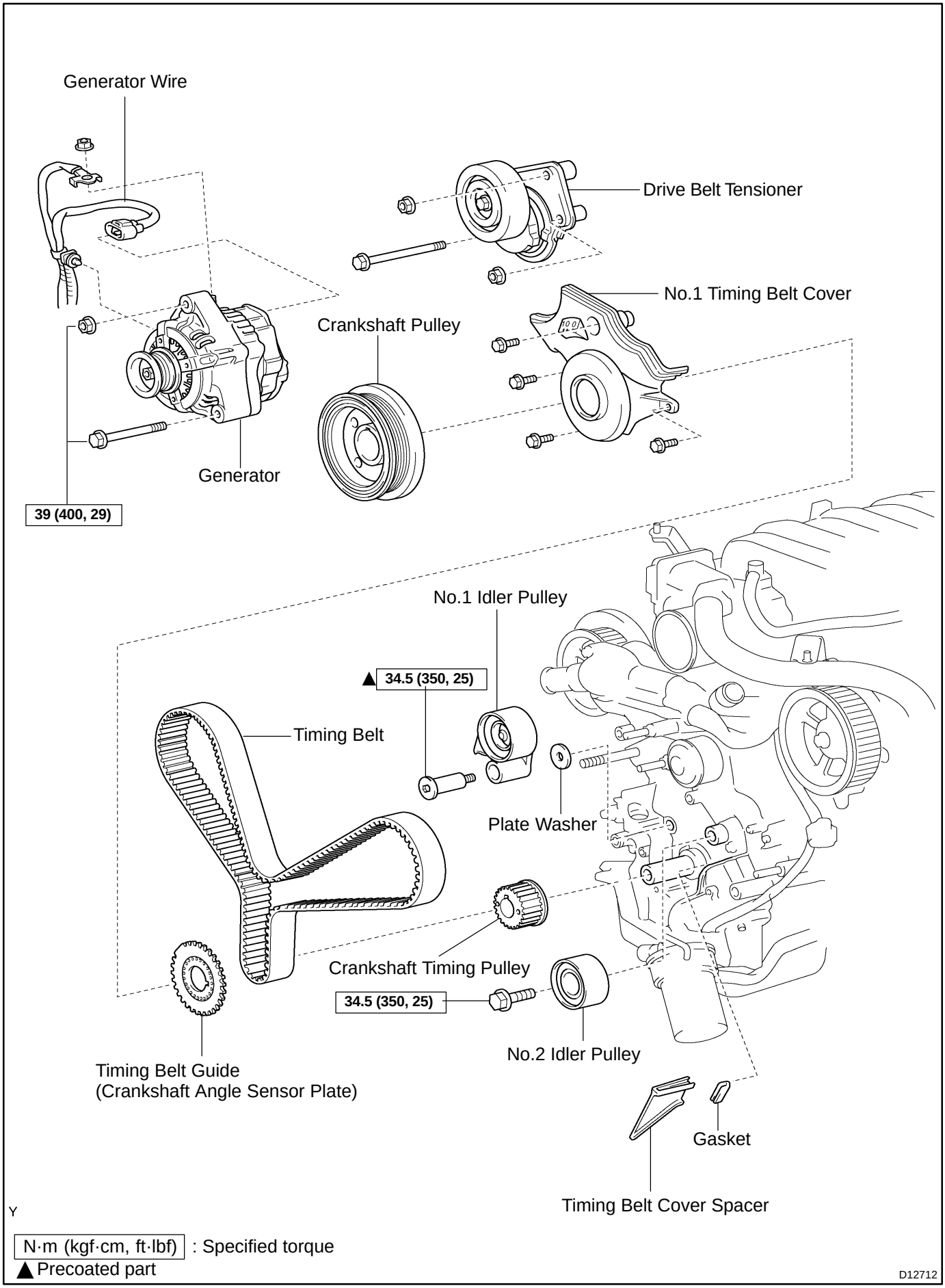
Generator Wire
Drive Belt Tensioner
No.1 Timing Belt Cover
Crankshaft Pulley
Generator
39 (400, 29)
No.1 Idler Pulley
▲ 34.5 (350, 25)
Timing Belt
Plate Washer
Crankshaft Timing Pulley
34.5 (350, 25)
No.2 Idler Pulley
Timing Belt Guide
(Crankshaft Angle Sensor Plate)
Gasket
Timing Belt Cover Spacer
Y
N·m (kgf·cm, ft·lbf) : Specified torque
▲ Precoated part
D12712

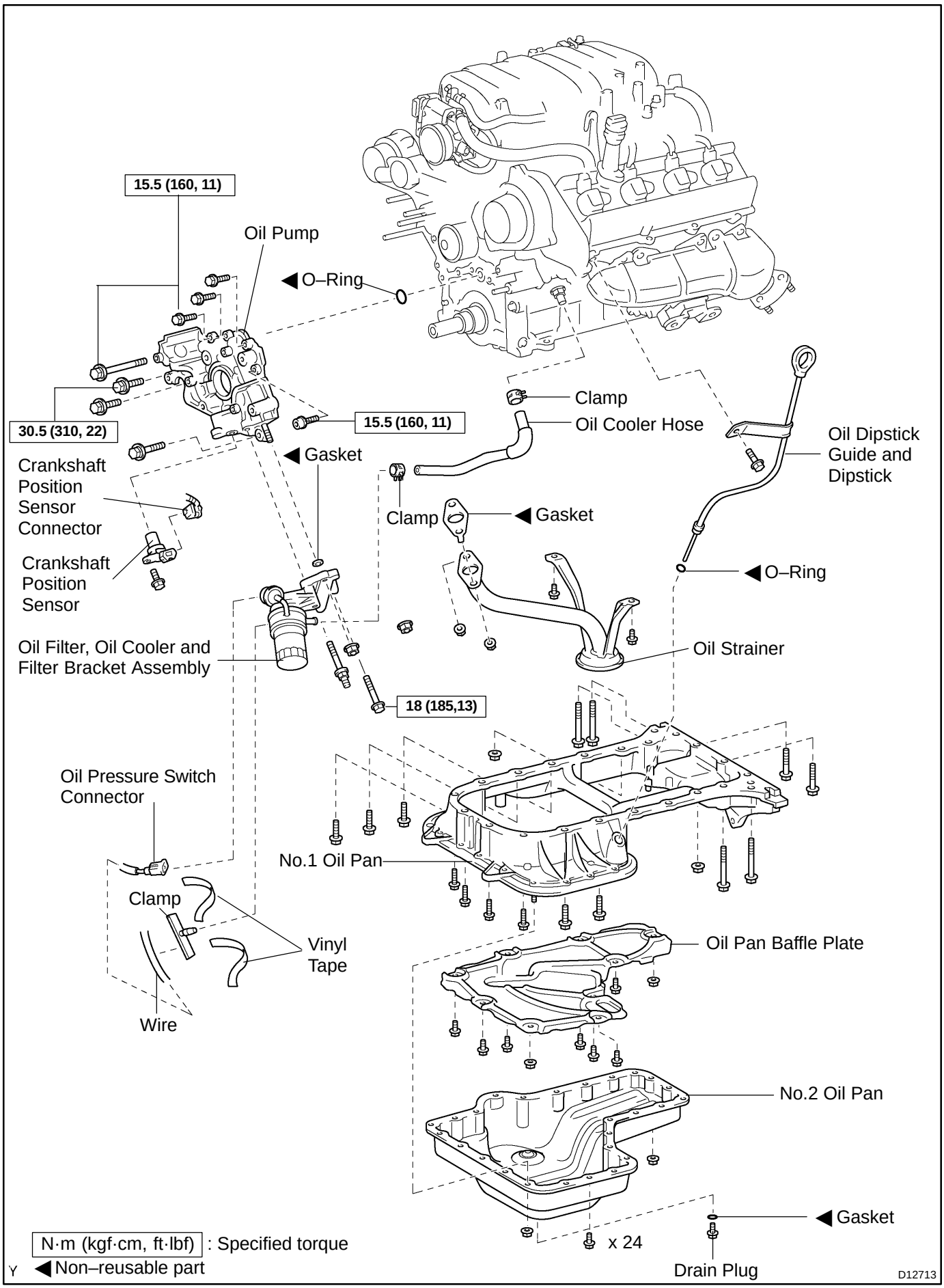
15.5 (160, 11)
Oil Pump
◀ O–Ring
30.5 (310, 22)
15.5 (160, 11)
Clamp
Oil Cooler Hose
Oil Dipstick Guide and Dipstick
◀ Gasket
Crankshaft Position Sensor Connector
Clamp
◀ Gasket
Crankshaft Position Sensor
◀ O–Ring
Oil Filter, Oil Cooler and Filter Bracket Assembly
Oil Strainer
18 (185,13)
Oil Pressure Switch Connector
No.1 Oil Pan
Clamp
Vinyl Tape
Oil Pan Baffle Plate
Wire
No.2 Oil Pan
◀ Gasket
x 24
Drain Plug
N·m (kgf·cm, ft·lbf) : Specified torque
◀ Non–reusable part
D12713

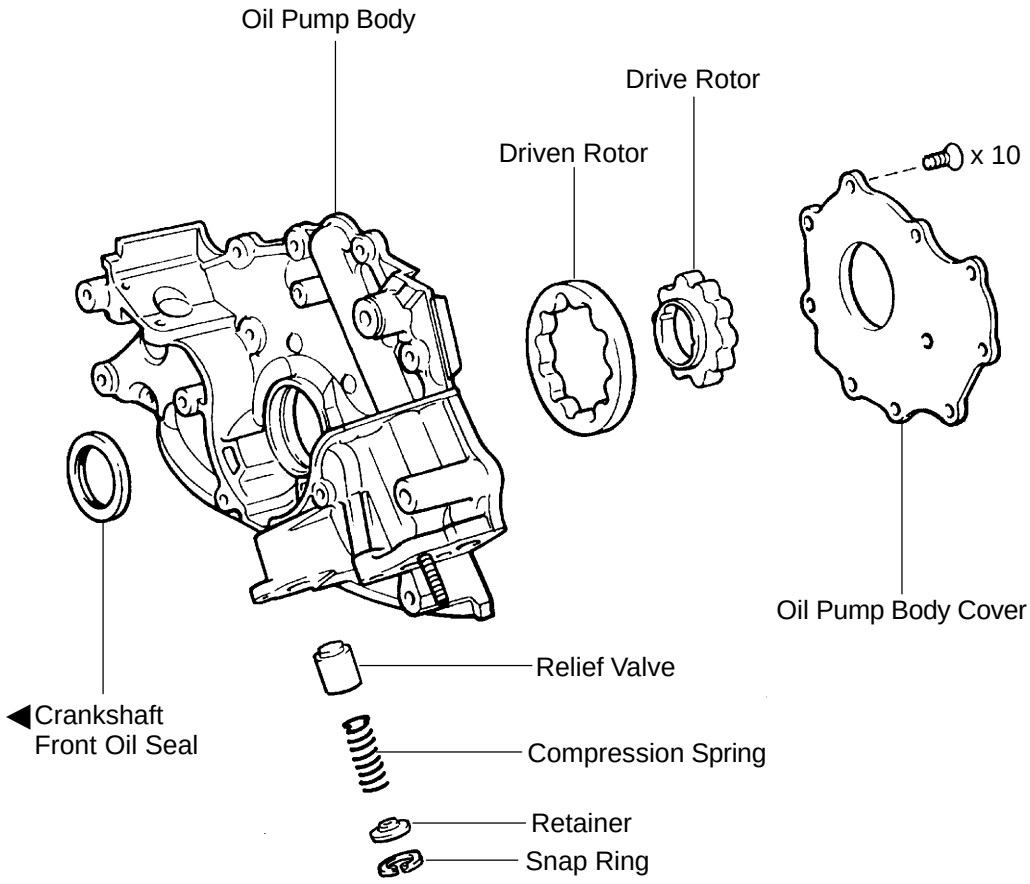

◀Non–reusable part

B03735

LU08Q–07

REMOVAL

HINT:

When repairing the oil pump, the oil pan and strainer should be removed and cleaned.

1. **REMOVE ENGINE FROM VEHICLE**
   (2WD: See page EM–72)
   (4WD: See page EM–84)
2. **INSTALL ENGINE TO ENGINE STAND FOR DISASSEMBLY**
3. **REMOVE TIMING BELT (See page EM–14)**
4. **REMOVE NO.1 IDLER PULLEY (See page EM–14)**
5. **REMOVE NO.2 IDLER PULLEY (See page EM–14)**
6. **REMOVE CRANKSHAFT TIMING PULLEY**
   (See page EM–14)
7. **REMOVE CRANKSHAFT POSITION SENSOR**
   (See page IG–11)

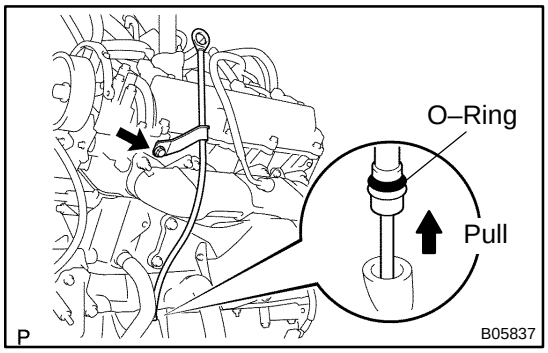

8. **REMOVE OIL DIPSTICK AND GUIDE**

(a) Remove the bolt holding the oil dipstick to the LH cylinder head.

(b) Pull out the dipstick guide together with the dipstick from the No.1 oil pan.

(c) Remove the O–ring from the dipstick guide.

9. **REMOVE OIL FILTER, OIL COOLER AND FILTER BRACKET ASSEMBLY**

(a) Disconnect the oil pressure switch connector.

(b) Take out the vinyl tape, and disconnect the wire from the clamp.

(c) Turn the clamp counterclockwise, and remove the clamp from the oil filter bracket.

(d) Disconnect the oil cooler hose from the oil cooler.

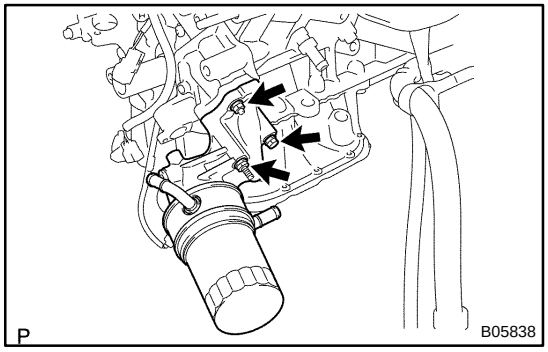

(e) Remove the 2 bolts, nut, the oil filter, oil cooler and filter bracket assembly.

(f) Remove the gasket from the filter bracket.

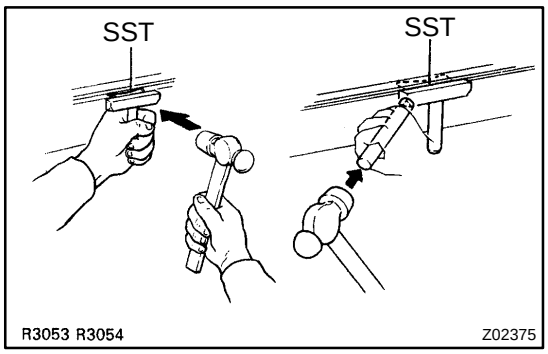

10. REMOVE NO.2 OIL PAN

(a) Remove the 24 bolts and 2 nuts.

(b) Insert the blade of SST between the No.1 and No.2 oil pans, cut off applied sealer and remove the No.2 oil pan.
SST 09032–00100

NOTICE:

- **Be careful not to damage the No.2 oil pan contact surface of the No.1 oil pan.**
- **Be careful not to damage the No.2 oil pan flange.**

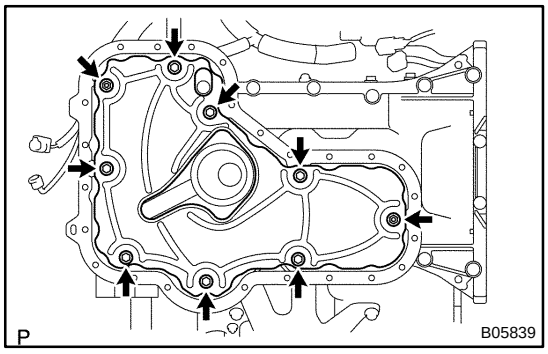

11. REMOVE OIL PAN BAFFLE PLATE

Remove the 7 bolts, 2 nuts and baffle plate.

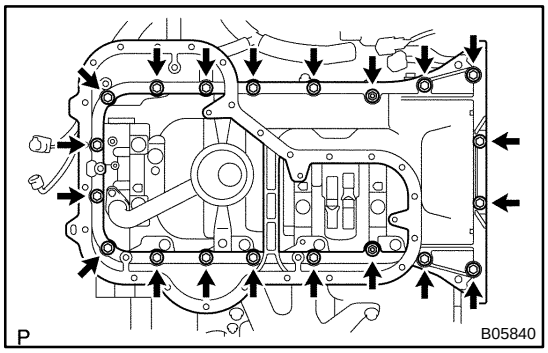

12. REMOVE NO.1 OIL PAN

(a) Remove the 18 bolts and 2 nuts.

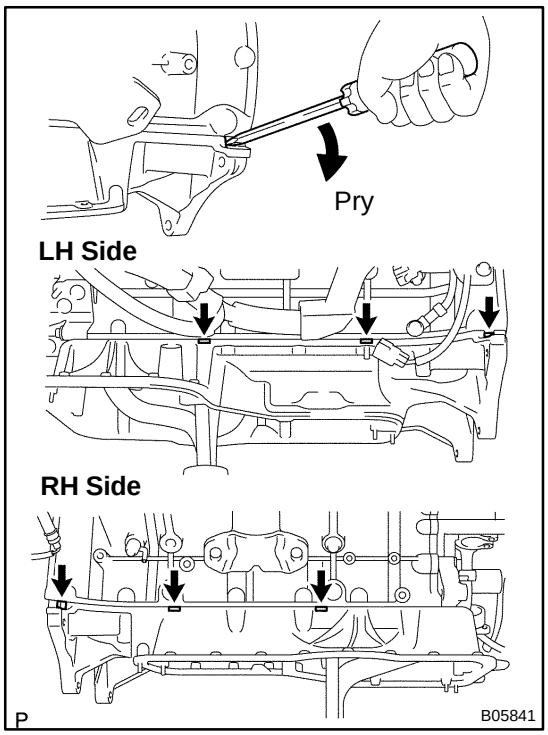

(b) Using a screwdriver, remove the No.1 oil pan by prying between the oil pan and cylinder block in the sequence shown.

NOTICE:

Be careful not to damage the contact surface of the cylinder block and No.1 oil pan.

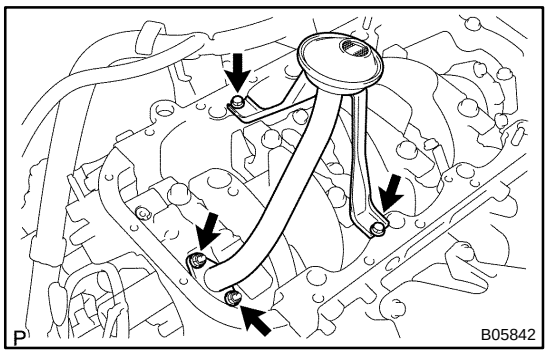

13. REMOVE OIL STRAINER

Remove the 2 bolt, 2 nuts, oil strainer and gasket.

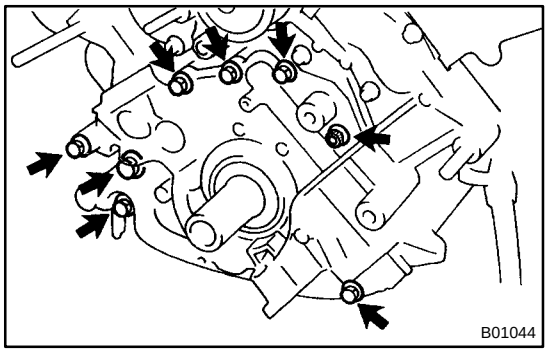

14. REMOVE OIL PUMP

(a) Remove the 8 bolts.

HINT:

Use a 6 mm hexagon wrench for the hexagon head bolt.

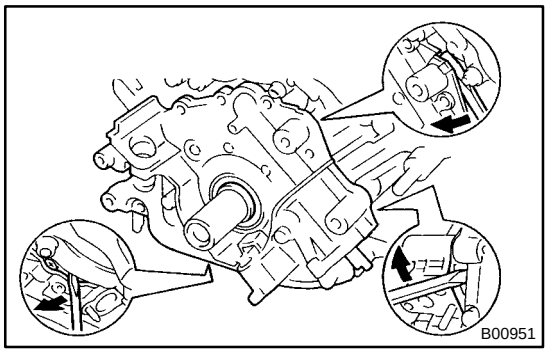

(b) Using a screwdriver, remove the oil pump by prying the portions between the oil pump and cylinder block.

NOTICE:

Be careful not to damage the contact surface of the cylinder block and oil pump.

(c) Remove the O–ring from the cylinder block.

LU08R–06

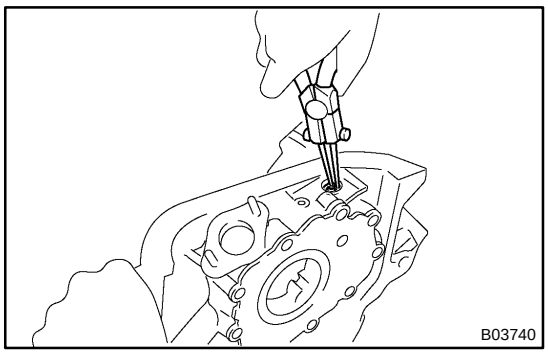

DISASSEMBLY

1. REMOVE RELIEF VALVE

(a) Using snap ring pliers, remove the snap ring.

(b) Remove the retainer, spring and relief valve.

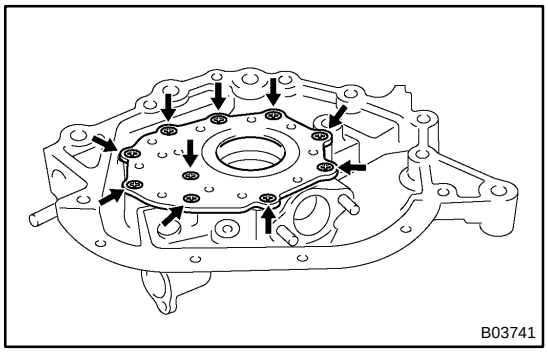

2. REMOVE DRIVE AND DRIVEN ROTORS

Remove the 10 screws, pump body cover, the drive and driven rotors.

LU08S–04

INSPECTION

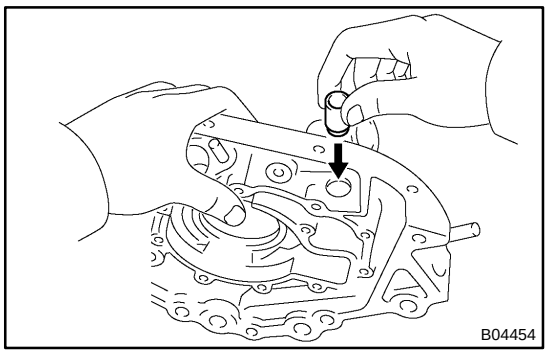

1. INSPECT RELIEF VALVE

Coat the valve with engine oil and check that it falls smoothly into the valve hole by its own weight.

If it doesn't, replace the relief valve. If necessary, replace the oil pump assembly.

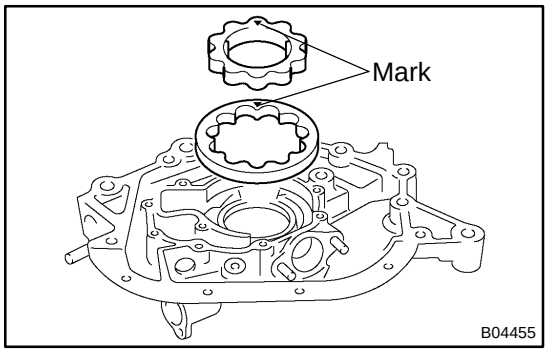

2. INSPECT DRIVE AND DRIVEN ROTORS INTO OIL PUMP BODY

Place the drive and driven rotors into the oil pump body with the mark facing upward.

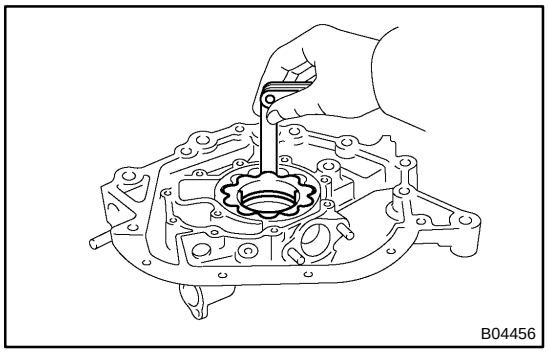

3. INSPECT ROTORS FOR TIP CLEARANCE

Using a feeler gauge, measure the clearance between the drive and driven rotor tips.

Tip clearance:

Standard	0.110 – 0.240 mm (0.0043 – 0.0094 in.)
Maximum	0.35 mm (0.0138 in.)

If the tip clearance is greater than maximum, replace the rotors as a set.

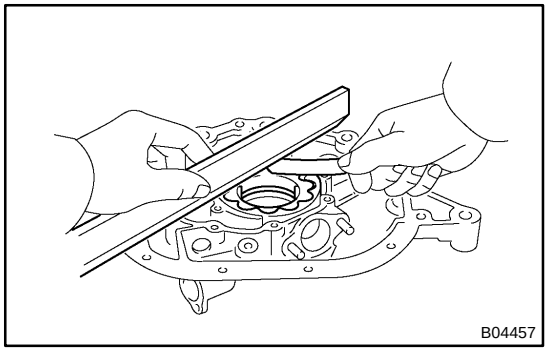

4. INSPECT ROTORS FOR SIDE CLEARANCE

Using a feeler gauge and precision straight edge, measure the clearance between the rotors and precision straight edge.

Side clearance:

Standard	0.030 – 0.090 mm (0.0012 – 0.0035 in.)
Maximum	0.15 mm (0.0059 in.)

If the side clearance is greater than maximum, replace the rotors as a set. If necessary, replace the oil pump assembly.

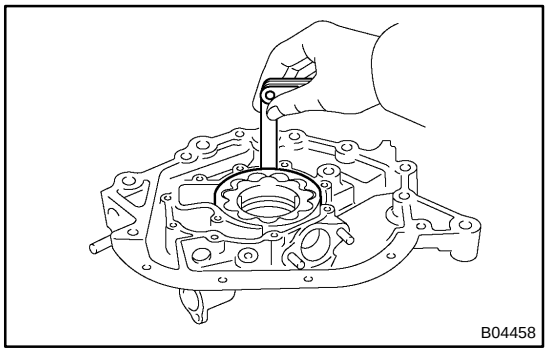

5. INSPECT ROTOR FOR BODY CLEARANCE

Using a feeler gauge, measure the clearance between the driven rotor and body.

Body clearance:

Standard	0.100 – 0.175 mm (0.0039 – 0.0069 in.)
Maximum	0.30 mm (0.0118 in.)

If the body clearance is greater than maximum, replace the rotors as a set. If necessary, replace the oil pump assembly.

6. REMOVE DRIVE AND DRIVE ROTORS

LU0GX–03

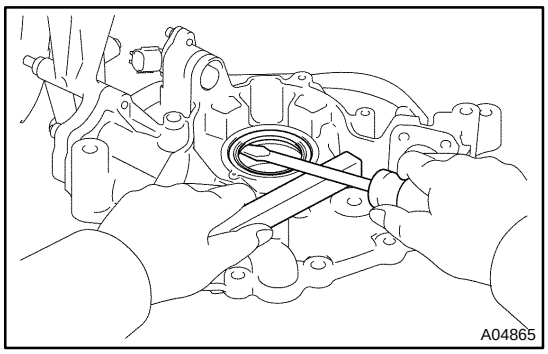

REPLACEMENT

REPLACE CRANKSHAFT FRONT OIL SEAL

HINT:

There are 2 methods ((a) and (b)) to replace the oil seal.

(a) If the oil pump is removed from the cylinder block:

(1) Using a screwdriver, pry out the oil seal.

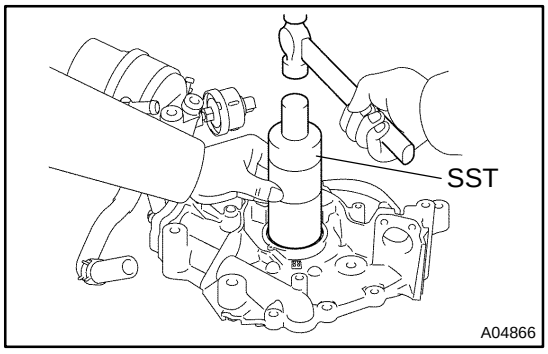

(2) Using SST and a hammer, tap in a new oil seal until its surface is flush with the oil pump body edge.

SST 09316–60011 (09316–00011)

(3) Apply MP grease to the oil seal lip.

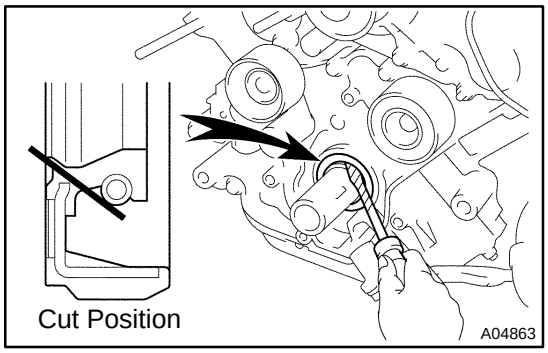

(b) If the oil pump is installed to the cylinder block:

(1) Using a knife, cut off the oil seal lip.

(2) Using a screwdriver, pry out the oil seal.

NOTICE:

Be careful not to damage the crankshaft. Tape the screwdriver tip.

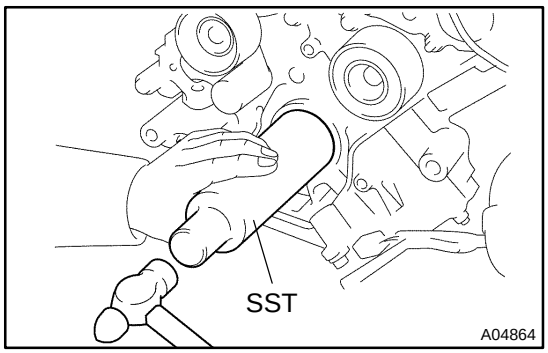

(3) Apply MP grease to a new oil seal lip.

(4) Using SST and a hammer, tap in the oil seal until its surface is flush with the oil pump body edge.

SST 09316–60011 (09316–00011)

LU08U–04

REASSEMBLY

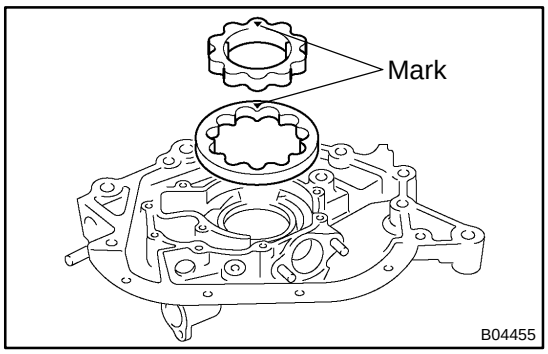

1. INSTALL DRIVE AND DRIVEN ROTORS

(a) Place the drive and driven rotors into pump body with the marks facing the pump body cover side.

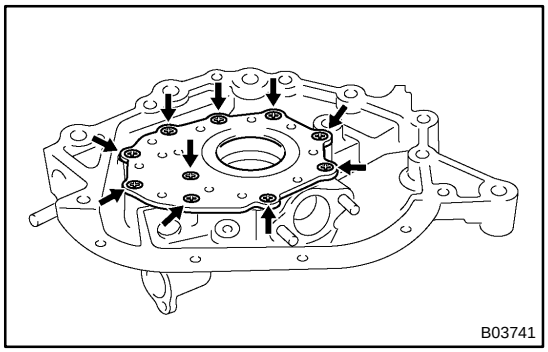

(b) Install the pump body cover with the 10 screws.
Torque: 10 N·m (105 kgf·cm, 7 ft·lbf)

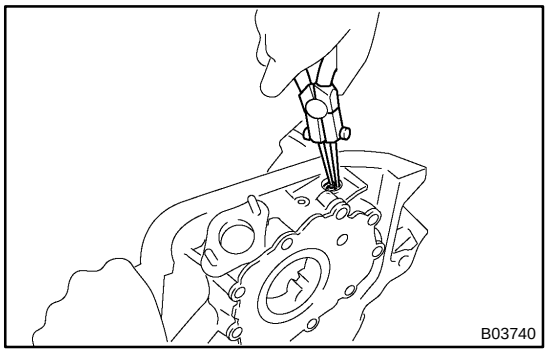

2. INSTALL RELIEF VALVE

(a) Insert the relief valve, spring and retainer into the oil pump body hole.

(b) Using snap ring pliers, install the snap ring.

LU0GY–04

INSTALLATION

1. INSTALL OIL PUMP

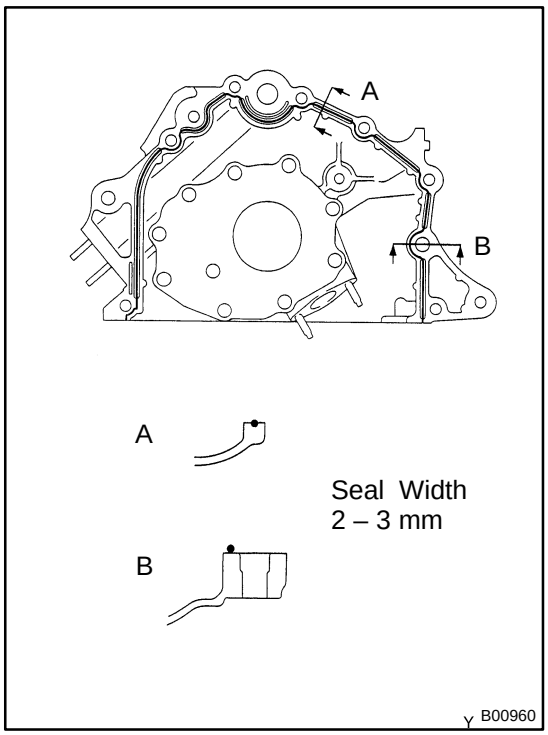

(a) Remove any old packing (FIPG) material and be careful not to drop any oil on the contact surfaces of the oil pump and cylinder block.

- ▲ Using a razor blade and gasket scraper, remove all the old packing (FIPG) material from the gasket surfaces and sealing groove.
- ▲ Thoroughly clean all components to remove all the loose material.
- ▲ Using a non–residue solvent, clean both sealing surfaces.

(b) Apply seal packing to the oil pump as shown in the illustration.

Seal packing: Part No. 08826–00080 or equivalent

NOTICE:

Avoid applying an excessive amount to the surface. Be particularly careful near oil passage.

- ▲ Install a nozzle that has been cut to a 2 – 3 mm (0.08 – 0.12 in.) opening.
- ▲ Parts must be assembled within 5 minutes of application. Otherwise the material must be removed and reapplied.
- ▲ Immediately remove nozzle from the tube and reinstall cap.

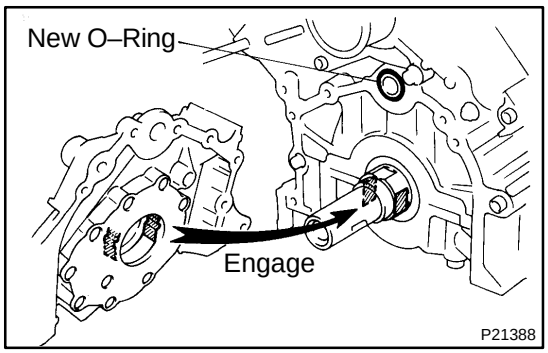

(c) Install a new O–ring to the cylinder block.

(d) Engage the spline teeth of the oil pump drive gear with the large teeth of the crankshaft, and slide the oil pump on the crankshaft.

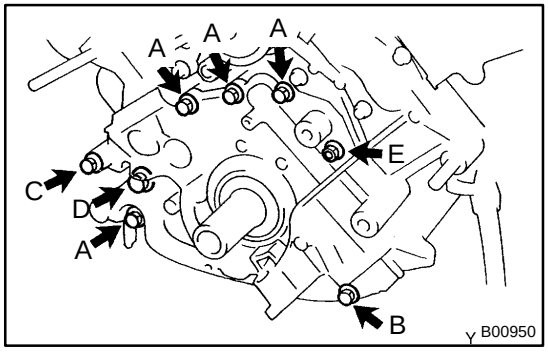

(e) Install the oil pump with the 8 bolts. Uniformly tighten the bolts in several passes.

Torque:

30.5 N·m (310 kgf·cm, 22 ft·lbf) for 14 mm head

15.5 N·m (160 kgf·cm, 11 ft·lbf) for others

HINT:

- ▲ Use a 6 mm hexagon wrench for the hexagon head bolt.
- ▲ Each bolt length is indicated in the illustration.

Bolt length:
35 mm (1.38 in.) for A of 12 mm head
50 mm (1.97 in.) for B of 12 mm head
106 mm (4.17 in.) for C of 12 mm head
40 mm (1.57 in.) for D of 14 mm head
30 mm (1.18 in.) for E of 6 mm hexagon head

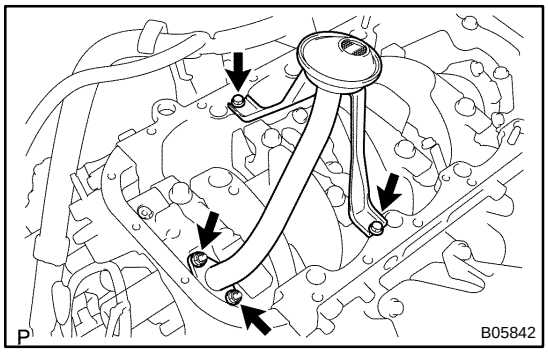

2. INSTALL OIL STRAINER

Install a new gasket and the oil strainer with the 2 bolts and 2 nuts.

Torque: 7.5 N·m (80 kgf·cm, 66 in.·lbf)

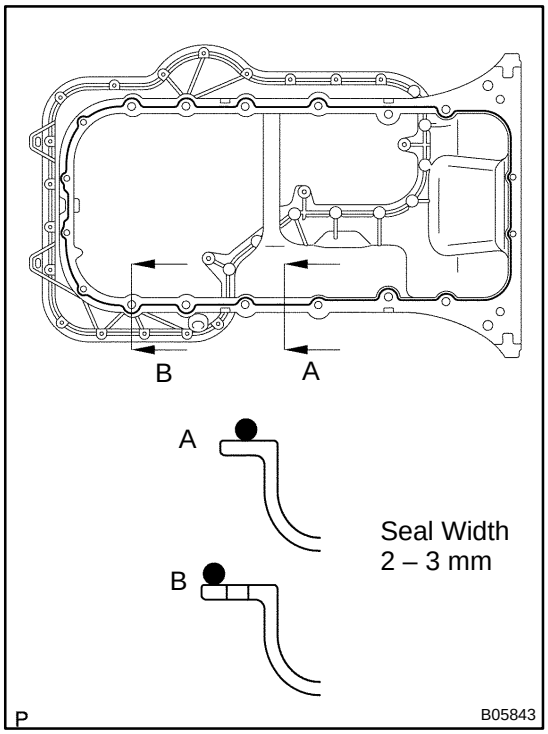

3. INSTALL NO.1 OIL PAN

(a) Remove any old packing (FIPG) material and be careful not to drop any oil on the contact surfaces of the No.1 oil pan, cylinder block, oil pump and rear oil seal retainer.

- ▲ Using a razor blade and gasket scraper, remove all the old packing (FIPG) material from the gasket surfaces and sealing groove.
- ▲ Thoroughly clean all components to remove all the loose material.
- ▲ Using a non–residue solvent, clean both sealing surfaces.

(b) Apply seal packing to the No.1 oil pan as shown in the illustration.

Seal packing: Part No. 08826–00080 or equivalent

- ▲ Install a nozzle that has been cut to a 2 – 3 mm (0.08 – 0.12 in.) opening.
- ▲ Parts must be assembled within 5 minutes of application. Otherwise the material must be removed and reapplied.
- ▲ Immediately remove nozzle from the tube and reinstall cap.

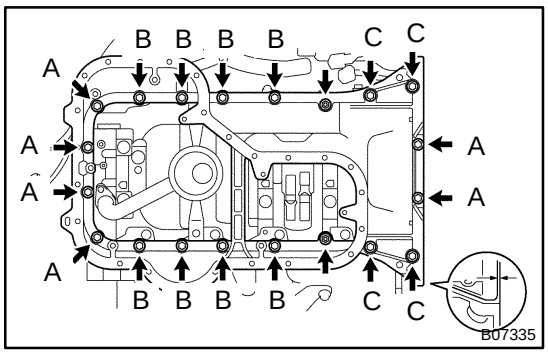

(c) Temporarily install the No.1 oil pan with the 18 bolts, stud bolt and 2 nuts.

HINT:

Each bolt length is indicated in the illustration.

Bolt length:

20 mm (0.79 in.) for A of 10 mm head

25 mm (0.98 in.) for B of 12 mm head

60 mm (2.36 in.) for C of 12 mm head

35 mm (1.38 in.) for D of 10 mm head

(d) Set the No.1 oil pan as shown in the illustration.

NOTICE:

Make sure the clearance between the rear ends of the No.1 oil pan and cylinder block is 0.2 mm (0.008 in.) or less. If the clearance is more than 0.2 mm (0.008 in.), the No.1 oil pan will be stretched.

(e) Uniformly tighten the bolts, and nuts in several passes.

Torque:

7.5 N·m (80 kgf·cm, 66 in.·lbf) for 10 mm head

28 N·m (290 kgf·cm, 21 ft·lbf) for 12 mm head

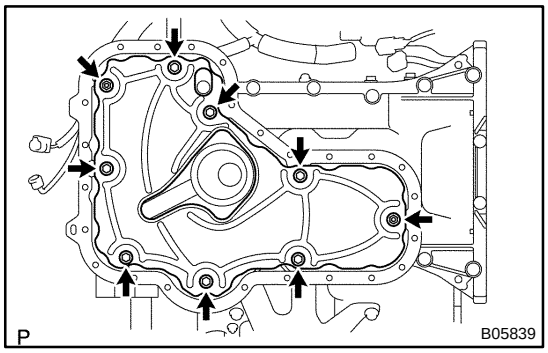

4. INSTALL OIL PAN BAFFLE PLATE

Install the baffle plate with the 7 bolts and 2 nuts.

Torque: 7.5 N·m (80 kgf·cm, 66 in.·lbf)

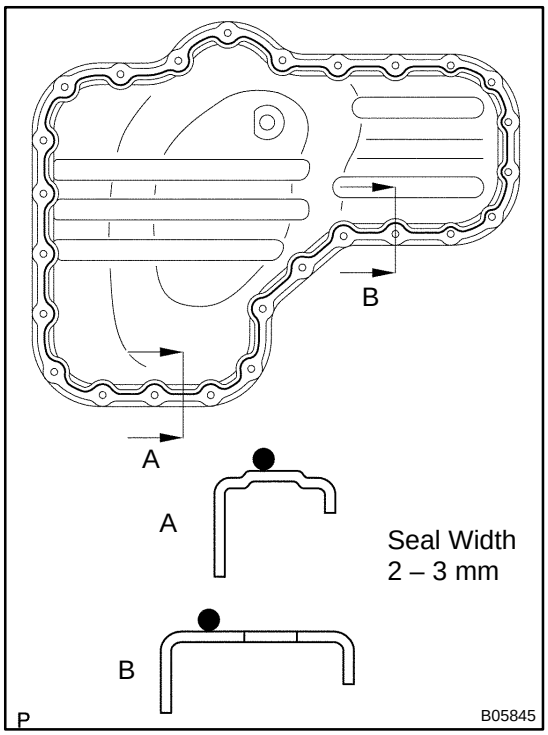

5. INSTALL NO.2 OIL PAN

(a) Remove any old packing (FIPG) material and be careful not to drop any oil on the contact surfaces of the No.1 and No.2 oil pans.

- ▲ Using a razor blade and gasket scraper, remove all the old packing (FIPG) material from the gasket surfaces and sealing groove.
- ▲ Thoroughly clean all components to remove all the loose material.
- ▲ Using a non–residue solvent, clean both sealing surfaces.

NOTICE:

Do not use a solvent which will affect the painted surfaces.

(b) Apply seal packing to the No.2 oil pan as shown in the illustration.

Seal packing: Part No. 08826–00080 or equivalent

- ▲ Install a nozzle that has been cut to a 3 – 4 mm (0.12 – 0.16 in.) opening.

▲ Parts must be assembled within 5 minutes of application. Otherwise the material must be removed and reapplied.

▲ Immediately remove nozzle from the tube and reinstall cap.

(c) Install the No.2 oil pan with the 24 bolts and 2 nuts. Uniformly tighten the bolts and nuts in several passes.
Torque: 7.5 N·m (80 kgf·cm, 66 in.·lbf)

6. INSTALL CRANKSHAFT POSITION SENSOR
(See page IG–13)

7. INSTALL OIL FILTER, OIL COOLER AND FILTER BRACKET ASSEMBLY

(a) Install a new gasket to the oil filter bracket.

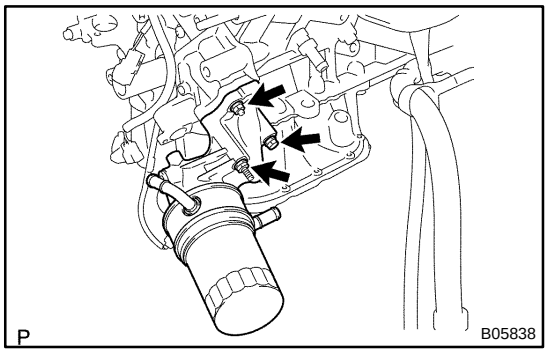

(b) Install the oil filter, oil cooler and filter bracket assembly with the 2 bolts and nut.
Torque: 18 N·m (185 kgf·cm, 13 ft·lbf)

(c) Connect the oil cooler hose to the oil cooler.

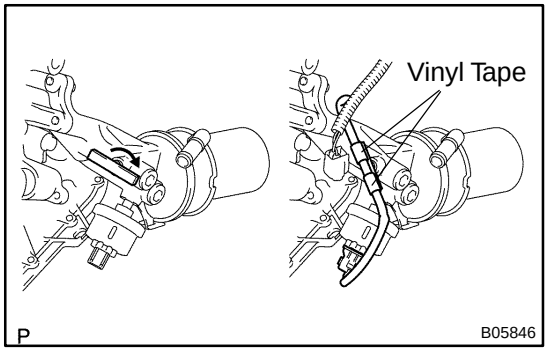

(d) Install the clamp.
Turn the clamp clockwise, and install the clamp to the oil filter bracket.

(e) Install the wire to the clamp with a vinyl tape.

(f) Connect the oil pressure switch connector.

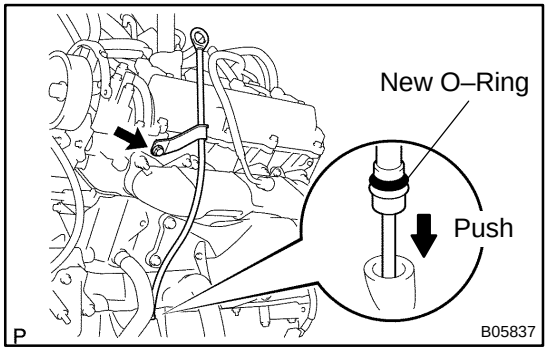

8. INSTALL OIL DIPSTICK GUIDE AND DIPSTICK

(a) Install a new O–ring to the dipstick guide.

(b) Apply soapy water to the O–ring.

(c) Push in the oil dipstick guide end into the guide hole of the No.1 oil pan.

(d) Install the oil dipstick guide with the bolt.
Torque: 15 N·m, (155 kgf·cm, 11 ft·lbf)

(e) Install the oil dipstick.

9. INSTALL CRANKSHAFT TIMING PULLEY
(See page EM–21)

10. INSTALL NO.1 IDLER PULLEY (See page EM–21)
11. INSTALL NO.2 IDLER PULLEY (See page EM–21)
12. INSTALL TIMING BELT (See page EM–21)
13. DISCONNECT ENGINE FROM ENGINE STAND
14. INSTALL ENGINE TO VEHICLE
    (2WD: See page EM–76)
    (4WD: See page EM–87)

OIL COOLER

COMPONENTS

LU08W–07

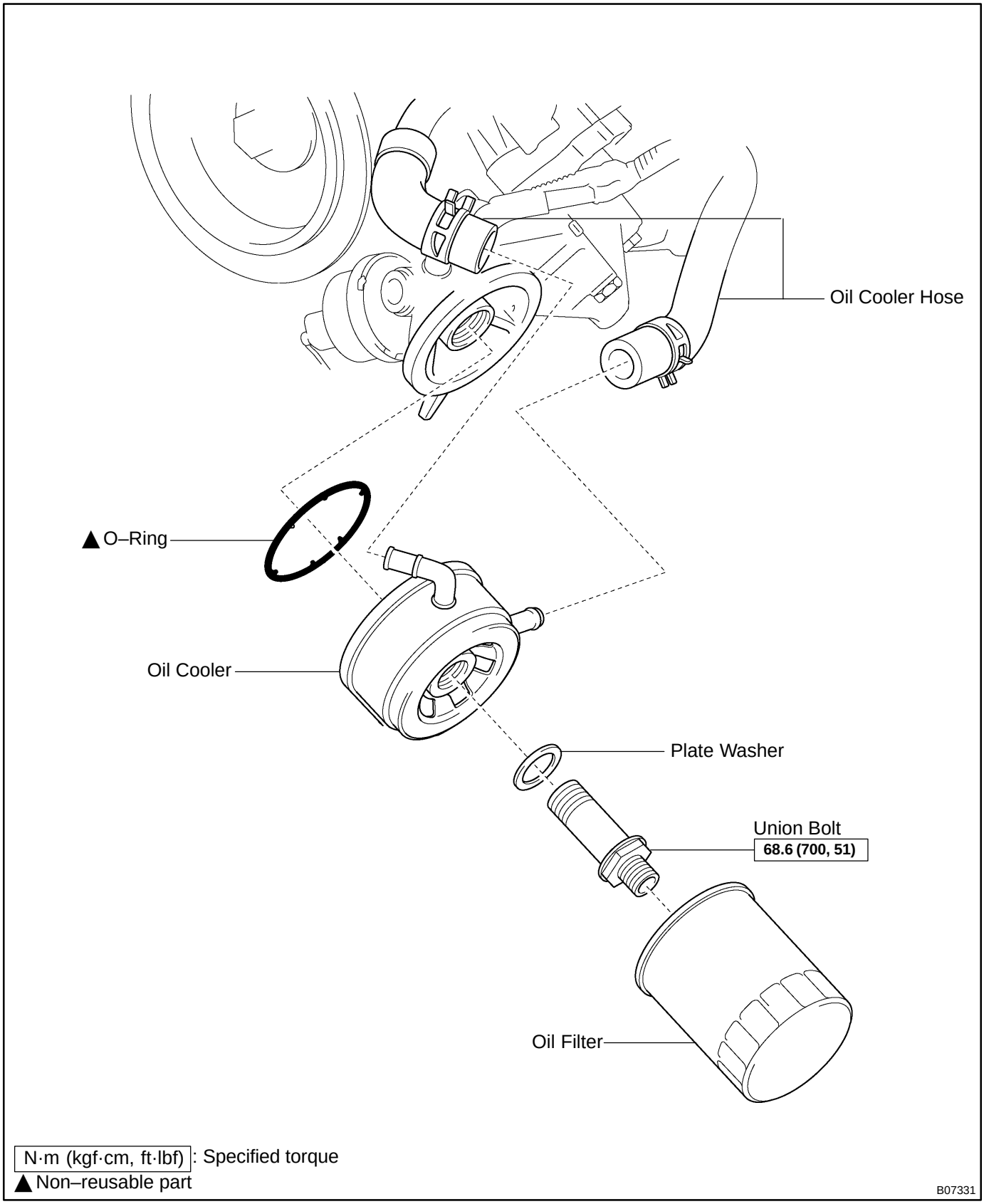

N·m (kgf·cm, ft·lbf): Specified torque
▲ Non–reusable part

B07331

LU08X–05

REMOVAL

1. DRAIN ENGINE COOLANT

2. REMOVE OIL FILTER (See page LU–2)

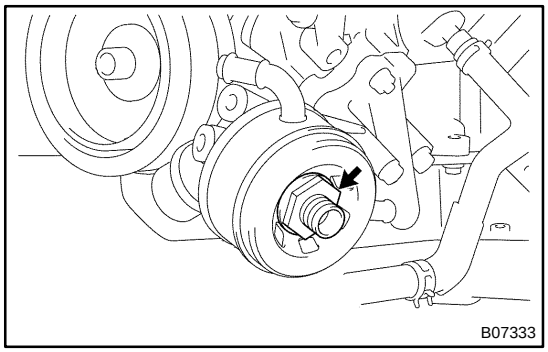

3. REMOVE OIL COOLER

(a) Disconnect the 2 oil cooler hoses from the oil cooler.

(b) Remove the union bolt, plate washer and oil cooler.

(c) Remove the O–ring from the oil cooler.

LU08Y–05

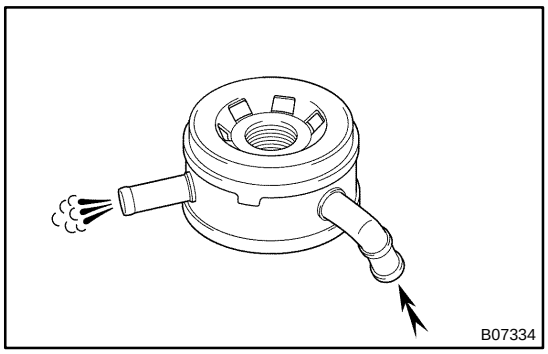

INSPECTION

INSPECT OIL COOLER

Check the oil cooler for damage or clogging.
If necessary, replace the oil cooler.

LU08Z–07

INSTALLATION

1. INSTALL OIL COOLER

(a) Clean the oil cooler contact surface on the cooler mounting.

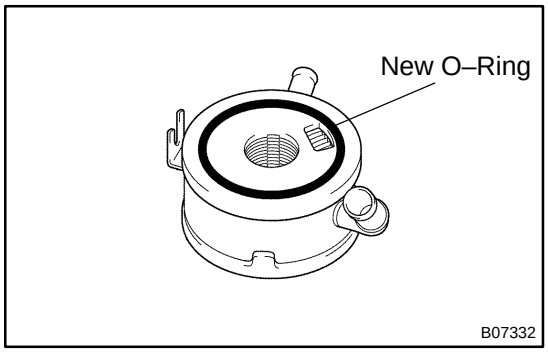

(b) Place a new O–ring to the oil cooler.

(c) Apply a light coat of engine oil on the threads and under the head of the union bolt.

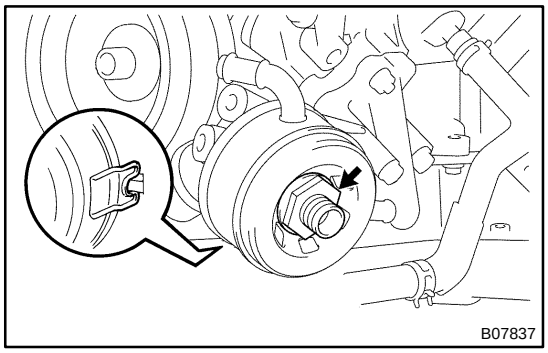

(d) Install the oil cooler and plate washer with the union bolt.
Torque: 68.6 N·m (700 kgf·cm, 51 ft·lbf)

(e) Connect the 2 oil cooler hoses to the oil cooler.

2. INSTALL OIL FILTER (See page LU–2)

3. FILL WITH ENGINE COOLANT

4. START ENGINE AND CHECK FOR ENGINE OIL LEAKS

5. CHECK ENGINE OIL LEVEL

TROUBLESHOOTING

MT04J–02

PROBLEM SYMPTOMS TABLE

Use the table below to help you find the cause of the problem. The numbers indicate the priority of the likely cause of the problem. Check each part in order. If necessary, replace these parts.

Symptom	Suspect Area		See page
Noise	1. Oil (Level low)	2WD	MT–3
		4WD	MT–8
	2. Oil (Wrong)	2WD	MT–3
		4WD	MT–8
	3. Gear (Worn or damaged)		MT–12
	4. Bearing (Worn or damaged)		MT–12
Oil leakage	1. Oil (Level too high)	2WD	MT–3
		4WD	MT–8
	2. Gasket (Damaged)		MT–12
	3. Oil seal (Worn or damaged)		MT–12
	4. O–Ring (Worn or damaged)		MT–12
Hard to shift or will not shift	1. Synchronizer ring (Worn or damaged)		MT–25 MT–28 MT–38
	2. Shift key spring (Damaged)		MT–28 MT–38
Jumps out of gear	1. Locking ball spring (Damaged)		MT–12
	2. Shift fork (Worn)		MT–12
	3. Gear (Worn or damaged)		MT–12
	4. Bearing (Worn or damaged)		MT–12

MANUAL TRANSMISSION UNIT (2WD)

COMPONENTS

MT04K–03

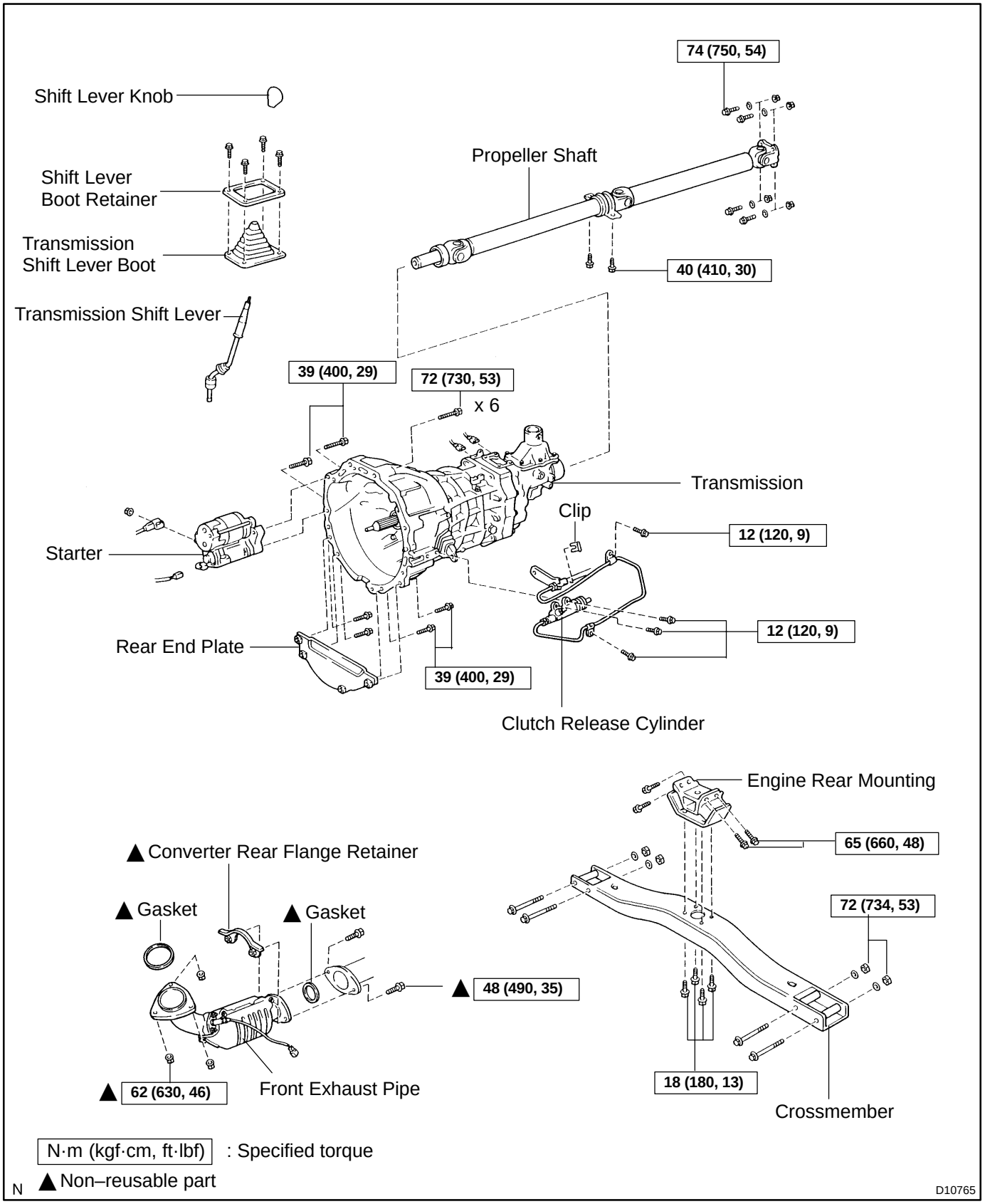

MT09H–01

REMOVAL

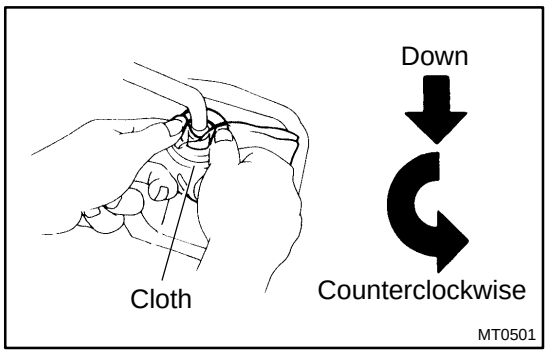

1. REMOVE TRANSMISSION SHIFT LEVER

(a) Remove the transmission shift lever knob.
(b) Remove the 4 bolts and shift lever boot retainer.
(c) Remove the transmission shift lever boot.
(d) Turn over the dust boot.
(e) Using a cloth, cover the shift lever cap.
(f) While, pressing down on the shift lever cap, rotate it counterclockwise to remove.
(g) Pull out the shift lever.

HINT:
At the time of installation, please refer to the following item.
Apply MP grease to the tip of the shift lever.

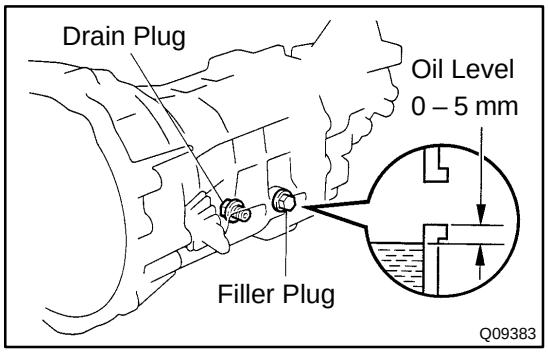

2. RAISE VEHICLE AND DRAIN TRANSMISSION OIL
Oil grade: API GL–4 or GL–5
Viscosity: SAE 75W–90
Capacity: 2.6 liters (2.7 US qts, 2.3 Imp. qts)
Torque: 37 N·m (380 kgf·cm, 27 ft·lbf)

3. REMOVE PROPELLER SHAFT (See page PR–3)

4. DISCONNECT VEHICLE SPEED SENSOR, BACK–UP LIGHT SWITCH CONNECTORS

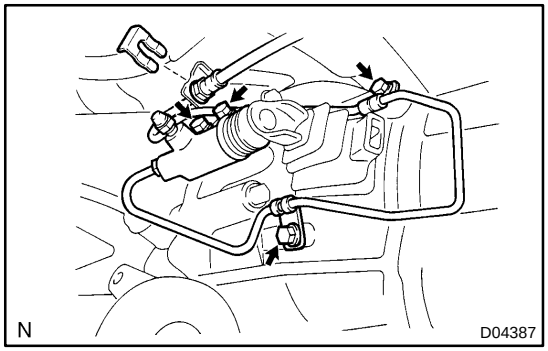

5. DISCONNECT CLUTCH RELEASE CYLINDER AND LINE

(a) Remove the clip.
(b) Remove the 4 bolts, release cylinder and line.
Torque: 12 N·m (120 kgf·cm, 9 ft·lbf)

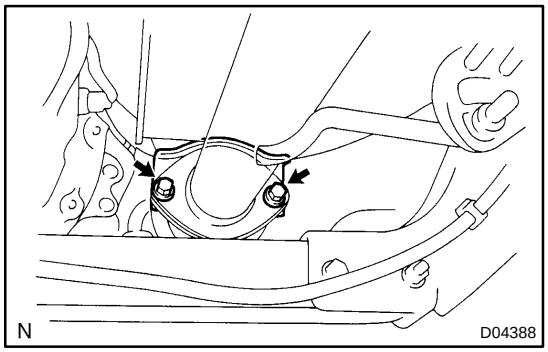

6. REMOVE FRONT EXHAUST PIPE

(a) Disconnect the oxygen sensor connector.
(b) Remove the 2 bolts and converter rear flange retainer.
Torque: 48 N·m (490 kgf·cm, 35 ft·lbf)

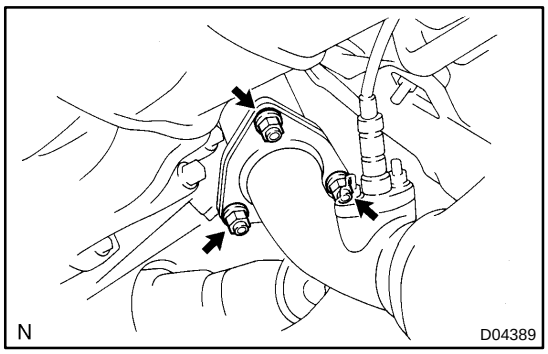

(c) Remove the 3 nuts, front exhaust pipe and 2 gaskets.
Torque: 62 N·m (630 kgf·cm, 46 ft·lbf)

HINT:
At the time of installation, please refer to the following item.
Replace the used gaskets and nuts with new once.

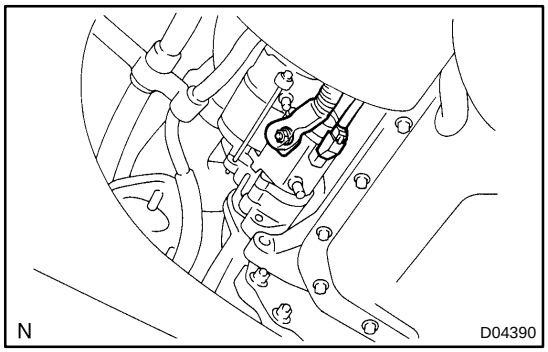

7. REMOVE STARTER

(a) Disconnect the connector.
(b) Remove the nut and disconnect the terminal.

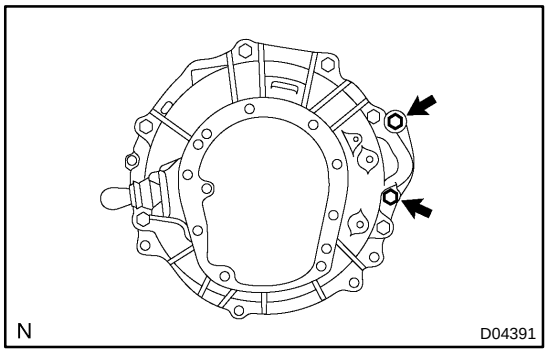

(c) Remove the 2 bolts and starter.
Torque: 39 N·m (400 kgf·cm, 29 ft·lbf)

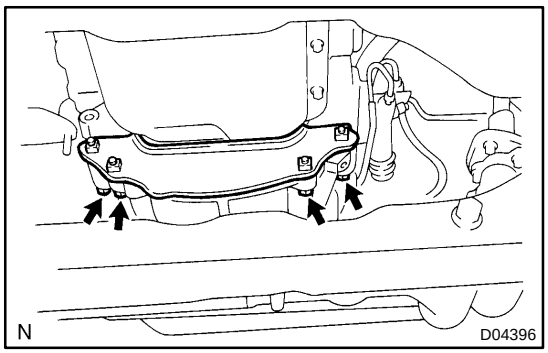

8. REMOVE REAR END PLATE

Remove the 4 bolts and rear end plate.
Torque: 37 N·m (380 kgf·cm, 27 ft·lbf)

9. JACK UP TRANSMISSION SLIGHTLY

Using a transmission jack, support the transmission.

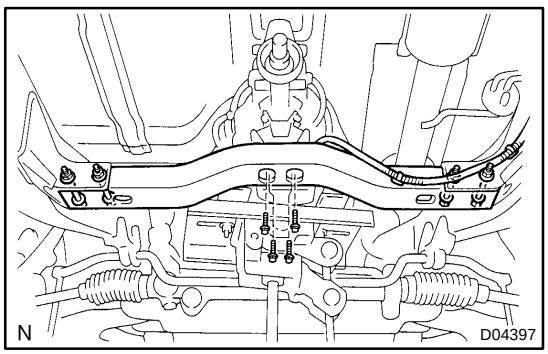

10. REMOVE CROSSMEMBER

(a) Disconnect the wire harness clamp from the crossmember.
(b) Remove the 4 set bolts of the engine rear mounting on the crossmember.
Torque: 18 N·m (180 kgf·cm, 13 ft·lbf)
(c) Remove the 4 nuts, washers and bolts.
Torque: 72 N·m (734 kgf·cm, 53 ft·lbf)
(d) Remove the crossmember.

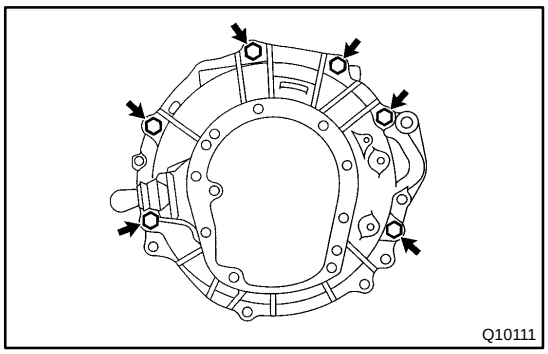

11. REMOVE TRANSMISSION

(a) Remove the 6 transmission mounting bolts from the engine.

Torque: 72 N·m (730 kgf·cm, 53 ft·lbf)

(b) Disconnect the wire harness from the clamps of the transmission.

(c) Pull out the transmission down and toward the rear.

NOTICE:

Be careful not to damage the PS turn pressure tube and front differential companion flange.

12. REMOVE ENGINE REAR MOUNTING

Remove the 4 bolts and engine rear mounting.

Torque: 65 N·m (660 kgf·cm, 48 ft·lbf)

MT04M–02

INSTALLATION

Installation is in the reverse order of removal (See page MT–3).

HINT:

After installation, do the road test.

MANUAL TRANSMISSION UNIT (4WD)

MT04N–03

COMPONENTS

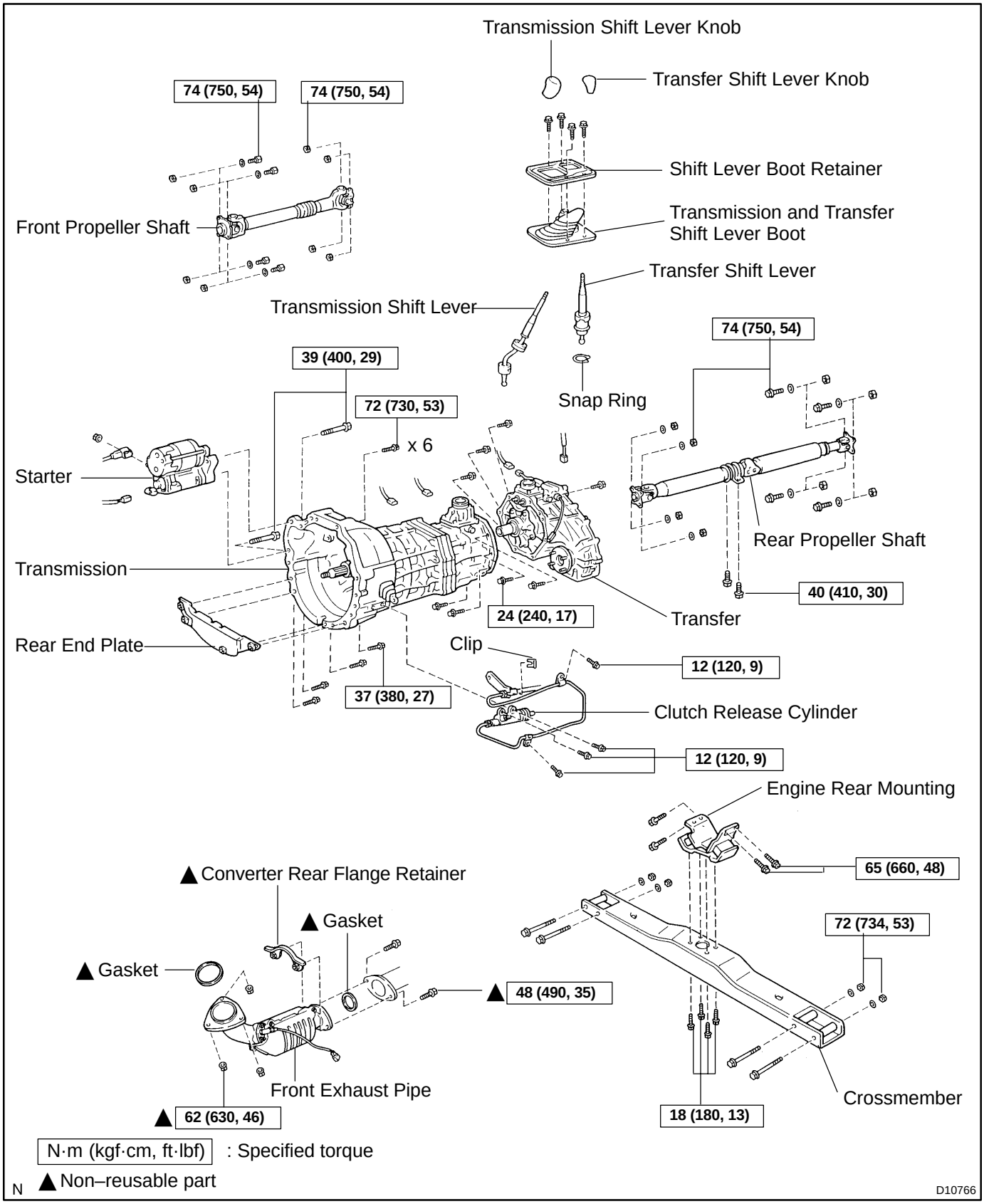

MT09I–01

REMOVAL

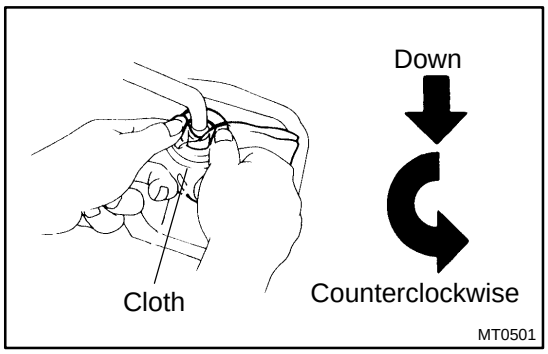

1. REMOVE TRANSMISSION SHIFT LEVER

(a) Remove the transmission and transfer shift lever knobs.
(b) Remove the 4 bolts and shift lever boot retainer.
(c) Remove the transmission and transfer shift lever boot.
(d) Turn over the dust boot.
(e) Using a cloth, cover the shift lever cap.
(f) While, pressing down on the shift lever cap, rotate it counterclockwise to remove.
(g) Pull out the transmission shift lever.

HINT:
At the time of installation, please refer to the following item.
Apply MP grease to the tip of the shift lever.

2. REMOVE TRANSFER SHIFT LEVER
(See page TR–4)

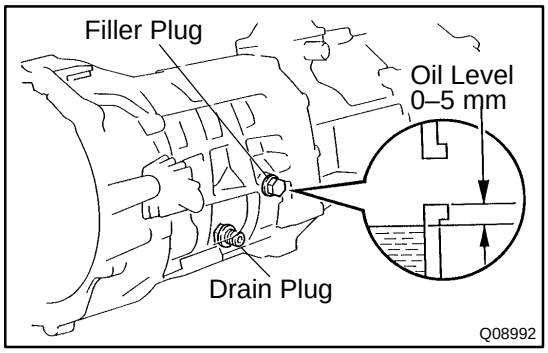

3. RAISE VEHICLE AND DRAIN TRANSMISSION OIL
Oil grade: API GL–4 or GL–5
Viscosity: SAE 75W–90
Capacity: 2.2 liters (2.3 US qts, 1.9 Imp. qts)
Torque: 37 N·m (380 kgf·cm, 27 ft·lbf)

4. REMOVE FRONT AND REAR PROPELLER SHAFTS
(See page PR–10)

5. DISCONNECT VEHICLE SPEED SENSOR, BACK–UP LIGHT SWITCH, TRANSFER 4WD POSITION SWITCH AND TRANSFER L4 POSITION SWITCH CONNECTOR

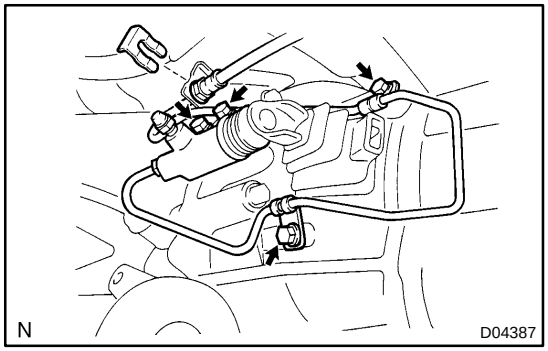

6. DISCONNECT CLUTCH RELEASE CYLINDER AND LINE

(a) Remove the clip.
(b) Remove the 4 bolts, release cylinder and line.
Torque: 12 N·m (120 kgf·cm, 9 ft·lbf)

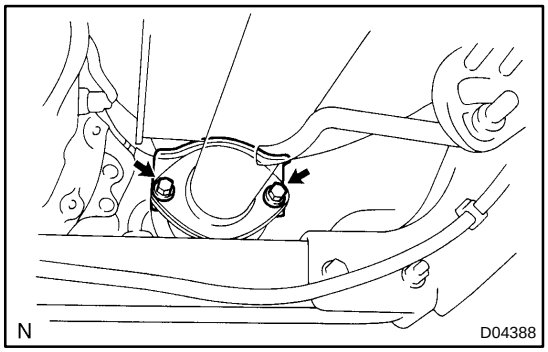

7. REMOVE FRONT EXHAUST PIPE

(a) Disconnect the oxygen sensor connector.
(b) Remove the 2 bolts and converter rear flange retainer.
Torque: 48 N·m (490 kgf·cm, 35 ft·lbf)

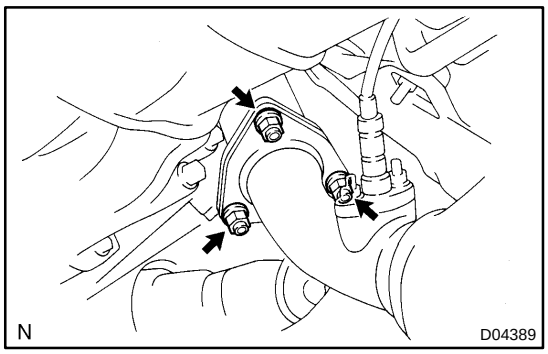

(c) Remove the 3 nuts, front exhaust pipe and 2 gaskets.
Torque: 62 N·m (630 kgf·cm, 46 ft·lbf)

HINT:
At the time of installation, please refer to the following item.
Replace the used gaskets and nuts with new ones.

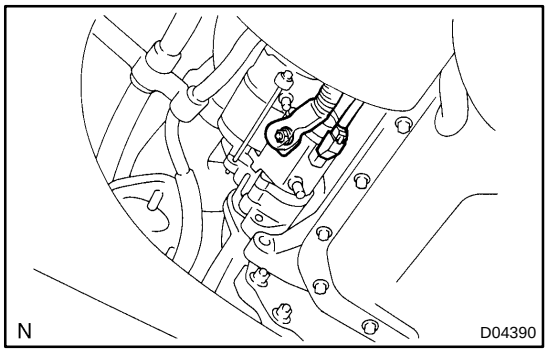

8. REMOVE STARTER

(a) Disconnect the connector.
(b) Remove the nut and disconnect the terminal.

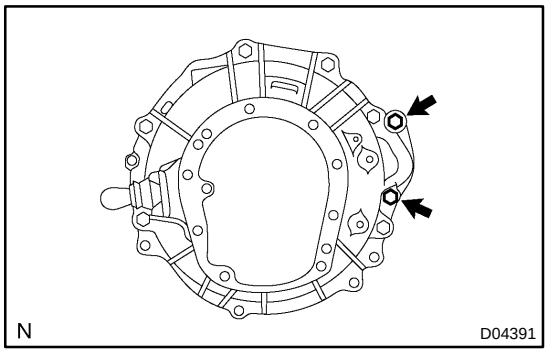

(c) Remove the 2 bolts and starter.
Torque: 39 N·m (400 kgf·cm, 29 ft·lbf)

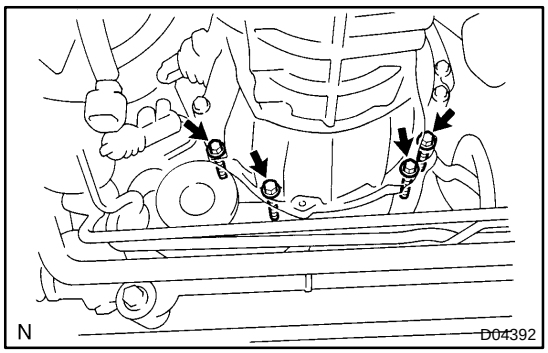

9. REMOVE REAR END PLATE

Remove the 4 bolts and rear end plate.
Torque: 37 N·m (380 kgf·cm, 27 ft·lbf)

10. SUPPORT TRANSMISSION SLIGHTLY

Using a transmission jack, support the transmission.

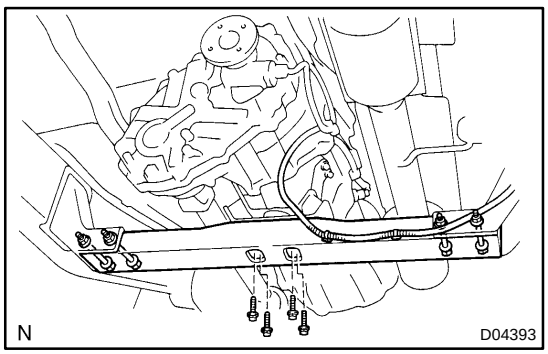

11. REMOVE CROSSMEMBER

(a) Disconnect the wire harness clamp from the crossmember.
(b) Remove the 4 set bolts of the engine rear mounting on the crossmember.
Torque: 18 N·m (180 kgf·cm, 13 ft·lbf)
(c) Remove the 4 nuts, washers and bolts.
Torque: 72 N·m (734 kgf·cm, 53 ft·lbf)
(d) Remove the crossmember.

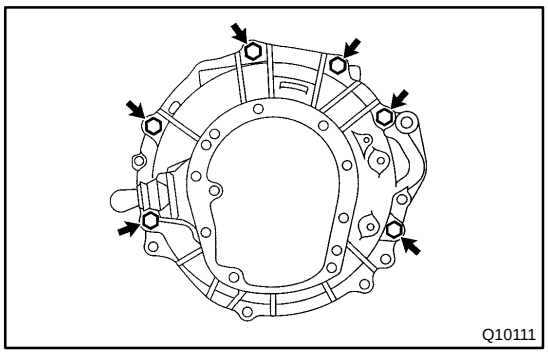
Q10111

12. REMOVE TRANSMISSION WITH TRANSFER

(a) Remove the 6 transmission mounting bolts from the engine.
Torque: 72 N·m (730 kgf·cm, 53 ft·lbf)

(b) Disconnect the wire harness from the clamps of the transmission and transfer.

(c) Pull out the transmission with the transfer down and toward the rear.

NOTICE:

Be careful not to damage the PS turn pressure tube and front differential companion flange.

13. REMOVE ENGINE REAR MOUNTING

Remove the 4 bolts and engine rear mounting.
Torque: 65 N·m (660 kgf·cm, 48 ft·lbf)

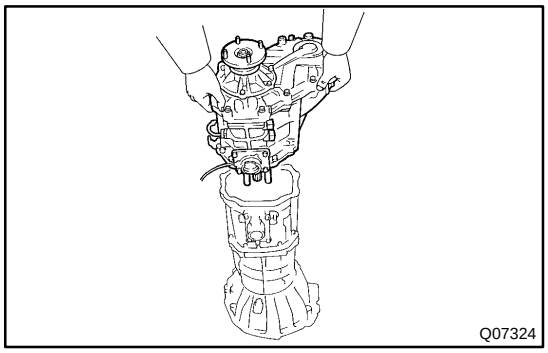
Q07324

14. REMOVE TRANSFER FROM TRANSMISSION

(a) Remove the 8 transfer adaptor rear mounting bolts.
Torque: 24 N·m (240 kgf·cm, 17 ft·lbf)

(b) Pull the transfer straight up and remove it from the transmission.

HINT:

Take care not to damage the adaptor rear oil seal with the transfer input gear spline.

HINT:

At the time of installation, please refer to the following item.

Apply MP grease to the lip of the adaptor oil seal.

MT04P–02

INSTALLATION

Installation is in the reverse order of removal (See page MT–8).

HINT:

After installation, do the road test.

MANUAL TRANSMISSION ASSEMBLY

COMPONENTS

MT04Q–02

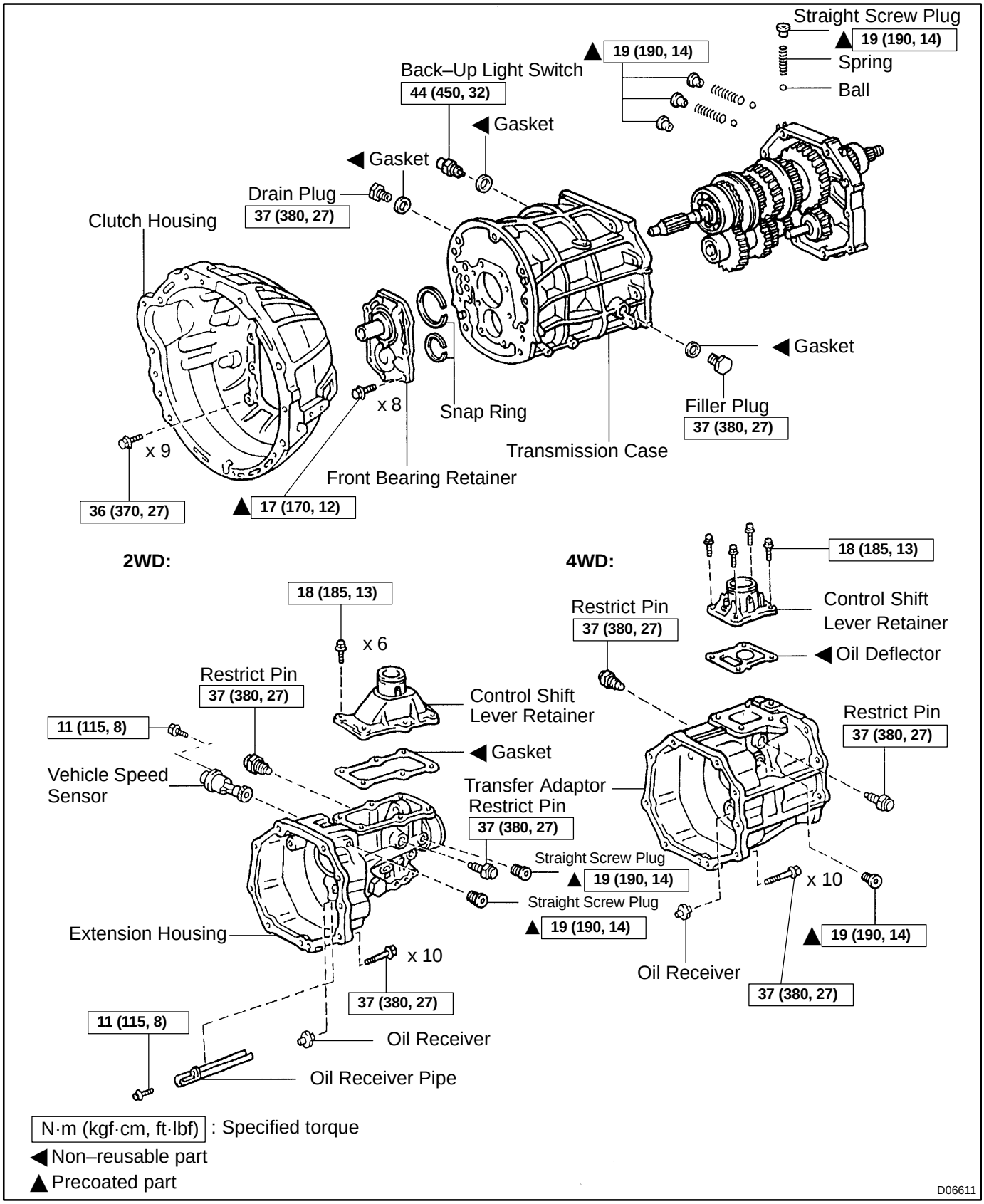

N·m (kgf·cm, ft·lbf) : Specified torque
◀ Non–reusable part
▲ Precoated part

D06611

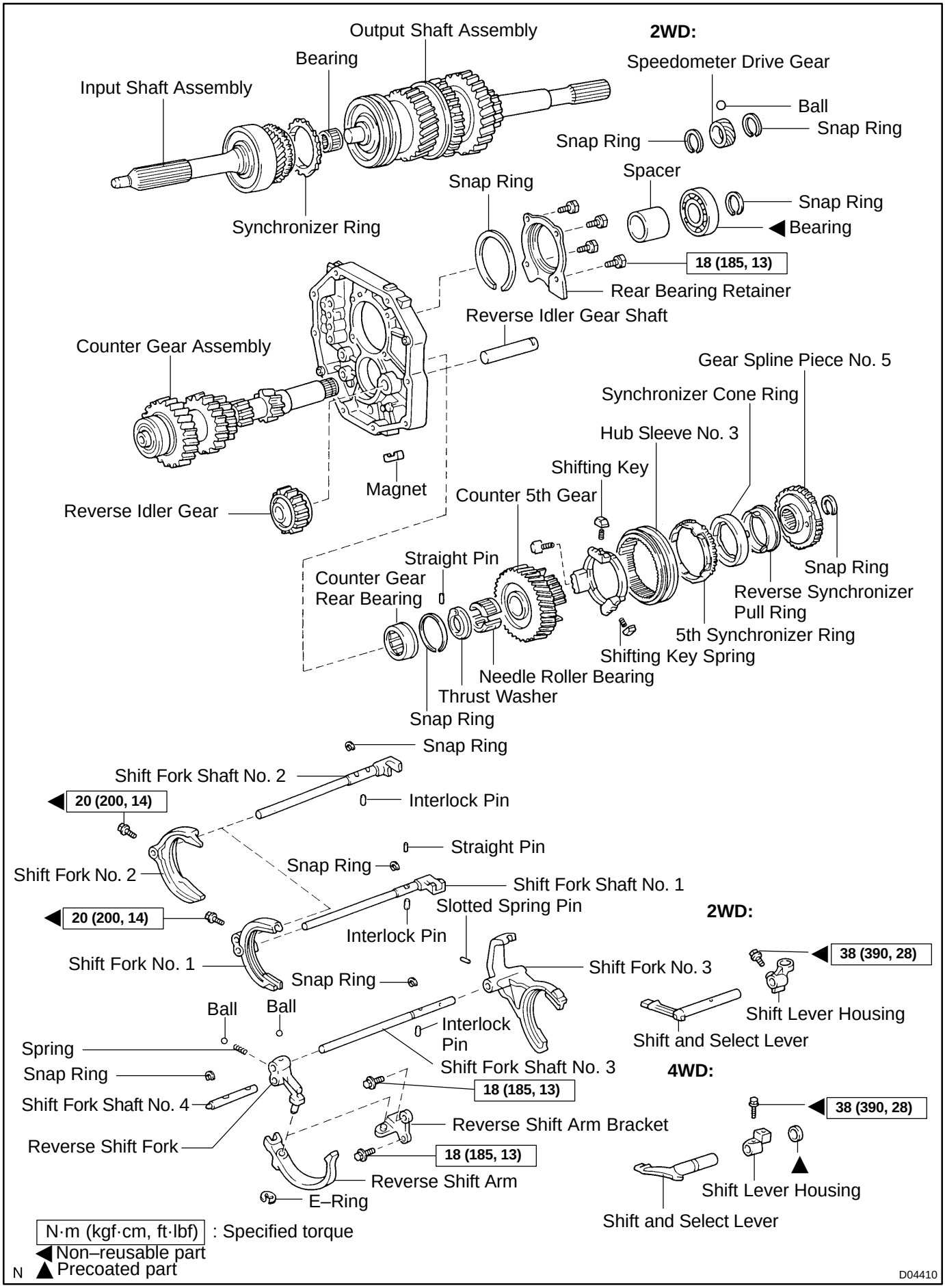
Output Shaft Assembly
Bearing
Input Shaft Assembly
Synchronizer Ring
2WD:
Speedometer Drive Gear
Ball
Snap Ring
Snap Ring
Spacer
Snap Ring
Bearing
Snap Ring
18 (185, 13)
Rear Bearing Retainer
Reverse Idler Gear Shaft
Counter Gear Assembly
Gear Spline Piece No. 5
Synchronizer Cone Ring
Hub Sleeve No. 3
Shifting Key
Magnet
Reverse Idler Gear
Counter 5th Gear
Straight Pin
Counter Gear
Rear Bearing
Snap Ring
Reverse Synchronizer
Pull Ring
5th Synchronizer Ring
Shifting Key Spring
Needle Roller Bearing
Thrust Washer
Snap Ring
Snap Ring
Shift Fork Shaft No. 2
20 (200, 14)
Interlock Pin
Straight Pin
Snap Ring
Shift Fork No. 2
Shift Fork Shaft No. 1
20 (200, 14)
Slotted Spring Pin
2WD:
Interlock Pin
Shift Fork No. 1
Snap Ring
Shift Fork No. 3
38 (390, 28)
Shift Lever Housing
Ball
Ball
Shift and Select Lever
Interlock
Pin
Spring
Shift Fork Shaft No. 3
Snap Ring
4WD:
18 (185, 13)
Shift Fork Shaft No. 4
38 (390, 28)
Reverse Shift Arm Bracket
Reverse Shift Fork
18 (185, 13)
Shift Lever Housing
Reverse Shift Arm
E–Ring
Shift and Select Lever
N·m (kgf·cm, ft·lbf) : Specified torque
Non–reusable part
N Precoated part
D04410

MT09J–02

DISASSEMBLY

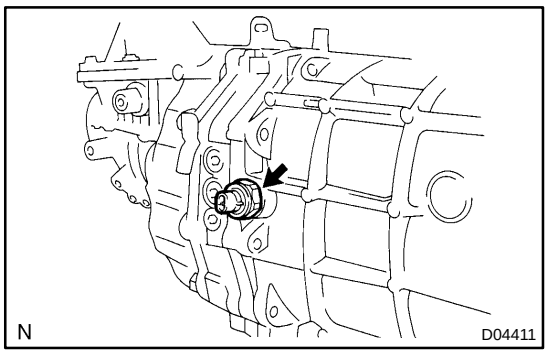

1. REMOVE BACK–UP LIGHT SWITCH

Torque: 44 N·m (450 kgf·cm, 32 ft·lbf)

HINT:

At the time of reassembly, please refer to the following item.
Replace the used gasket with a new one.

2. 2WD:

REMOVE VEHICLE SPEED SENSOR

Remove the vehicle speed sensor lock plate, set bolt and vehicle speed sensor.

Torque: 11 N·m (115 kgf·cm, 8 ft·lbf)

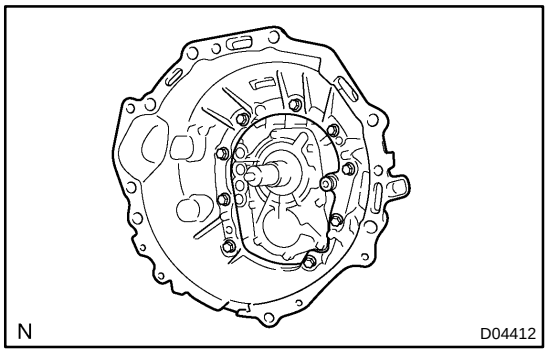

3. REMOVE CLUTCH HOUSING FROM TRANSMISSION CASE

Remove the 9 bolts and clutch housing from the transmission case.

Torque: 36 N·m (370 kgf·cm, 27 ft·lbf)

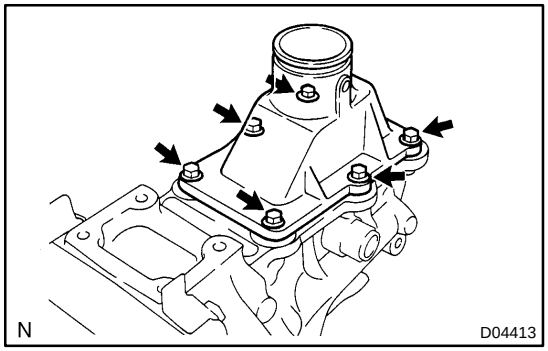

4. REMOVE CONTROL SHIFT LEVER RETAINER

(a) 2WD:

Remove the 6 bolts, control shift lever retainer and gasket.

Torque: 18 N·m (185 kgf·cm, 13 ft·lbf)

HINT:

At the time of installation, please refer to the following item.
Replace the used gasket with a new one.

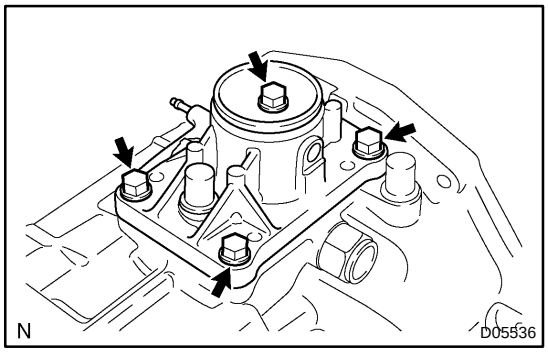

(b) 4WD:

Remove the 4 bolts, control shift lever retainer and oil deflector.

Torque: 18 N·m (185 kgf·cm, 13 ft·lbf)

HINT:

At the time of installation, please refer to the following item.
Replace the used gasket with a new one.

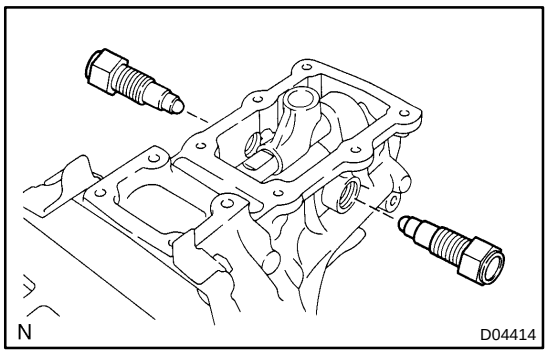

5. REMOVE 2 RESTRICT PINS
Torque: 37 N·m (380 kgf·cm, 27 ft·lbf)

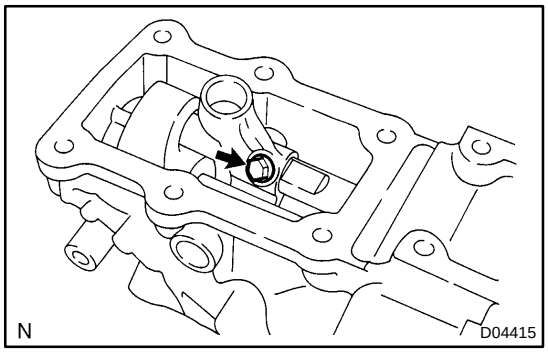

6. 2WD:
REMOVE EXTENSION HOUSING

(a) Remove the shift lever housing set bolt.
Torque: 38 N·m (390 kgf·cm, 28 ft·lbf)

HINT:
At the time of installation, please refer to the following item.
Replace the used set bolt with a new one.

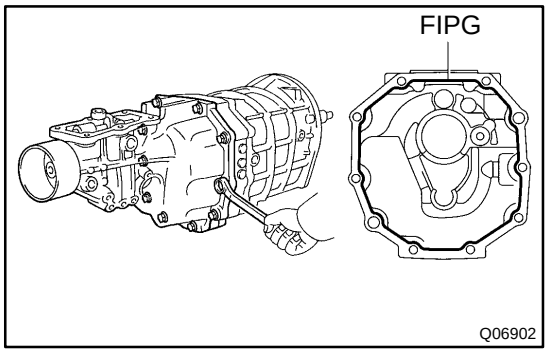

(b) Remove the 10 bolts.
Torque: 37 N·m (380 kgf·cm, 27 ft·lbf)

(c) Using a plastic hammer, tap the extension housing, remove the extension housing, shift lever housing and shift and select lever.
FIPG:
Part No. 08826 – 00090, THREE BOND 1281 or equivalent

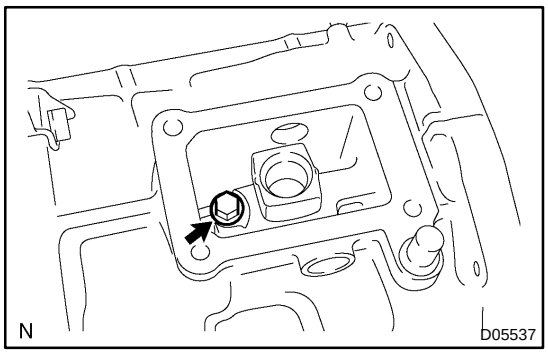

7. 4WD:
REMOVE TRANSFER ADAPTOR

(a) Remove the shift lever housing set bolt.
Torque: 38 N·m (390 kgf·cm, 28 ft·lbf)

HINT:
At the time of installation, please refer to the following item.
Replace the used set bolt with a new one.

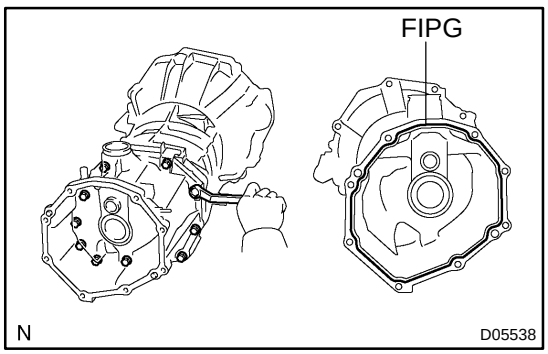

(b) Remove the 10 bolts.
Torque: 37 N·m (380 kgf·cm, 27 ft·lbf)

(c) Using a plastic hammer, tap the transfer adaptor, remove the transfer adaptor, shift lever housing and shift and select lever.
FIPG:
Part No. 08826 – 00090, THREE BOND 1281 or equivalent

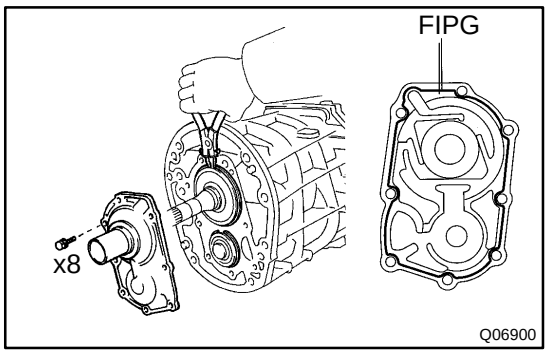

8. REMOVE FRONT BEARING RETAINER

(a) Remove the 8 bolts.

Sealant:
Part No. 08833 – 00080, THREE BOND 1344, LOCTITE 242 or equivalent
Torque: 17 N·m (170 kgf·cm, 12 ft·lbf)

(b) Using a plastic hammer, tap the front bearing retainer.

FIPG:
Part No. 08826 – 00090, THREE BOND 1281 or equivalent

9. REMOVE BEARING SNAP RING

Using a snap ring expander, remove the 2 snap rings.

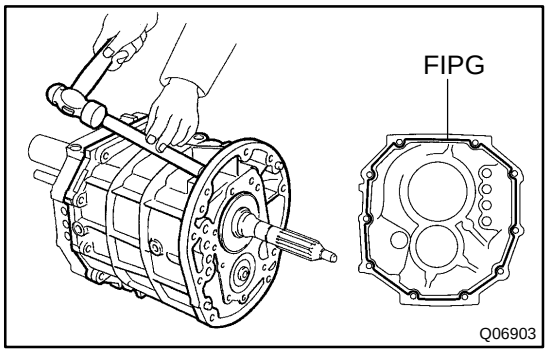

10. SEPARATE INTERMEDIATE PLATE FROM TRANSMISSION CASE

(a) Using a brass bar and hammer, carefully tap the transmission case.

(b) Remove the transmission case from the intermediate plate.

HINT:

At the time of reassembly, please refer to the following item.

Align the each bearing outer race, each fork shaft end and reverse idler gear shaft end with the case installation holes.

FIPG:
Part No. 08826 – 00090, THREE BOND 1281 or equivalent

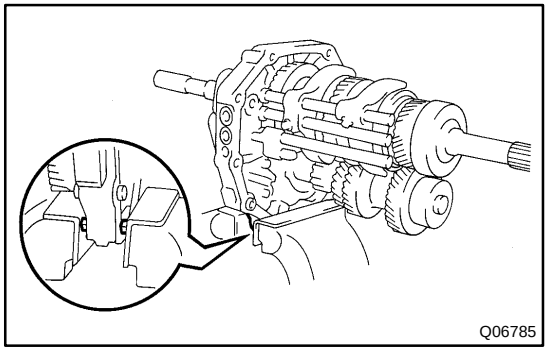

11. MOUNT INTERMEDIATE PLATE IN VISE

(a) Use the 2 clutch housing bolts, plate washers and suitable nuts, as shown.

HINT:

Increase or decrease plate washers so that the bolt tip does not protrude from the nut.

(b) Mount the intermediate plate in a vise.

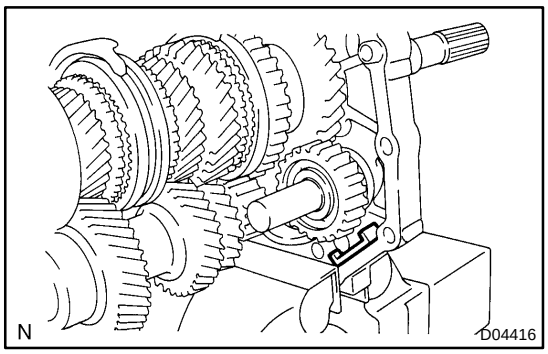

12. REMOVE MAGNET FROM INTERMEDIATE PLATE

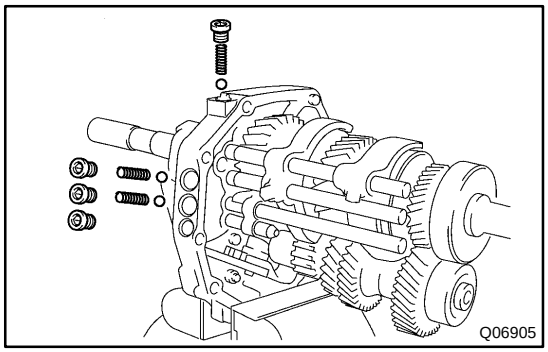

13. REMOVE STRAIGHT SCREW PLUG, LOCKING BALL AND SPRING

(a) Using a hexagon wrench (T40), remove the 4 plugs.
Sealant:
Part No. 08833 – 00080, THREE BOND 1344, LOCTITE 242 or equivalent
Torque: 19 N·m (190 kgf·cm, 14 ft·lbf)

(b) Using a magnetic finger, remove the 3 springs and balls.

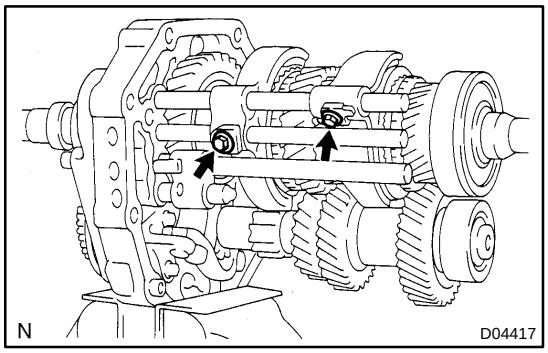

14. REMOVE SHIFT FORK SET BOLT

Remove the 2 bolts from the shift forks No. 1 and No. 2.
Torque: 20 N·m (200 kgf·cm, 14 ft·lbf)

HINT:
At the time of installation, please refer to the following item.
Replace the used set bolt with a new one.

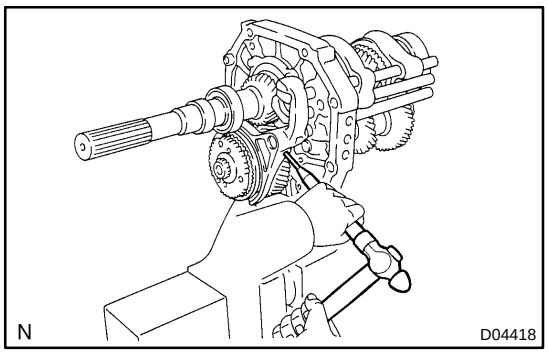

15. REMOVE SLOTTED SPRING PIN

Using a pin punch and hammer, drive out the pin from the shift fork No. 3.

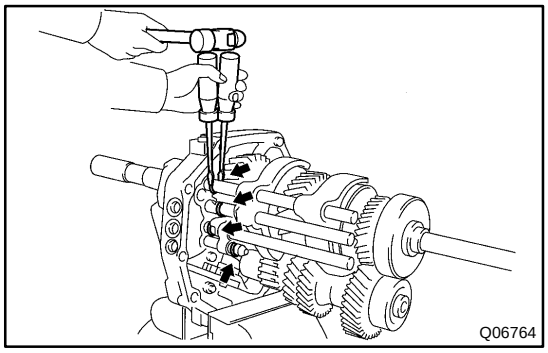

16. REMOVE SNAP RING

Using 2 screwdrivers and a hammer, tap out the 4 snap rings from each shift fork shaft.

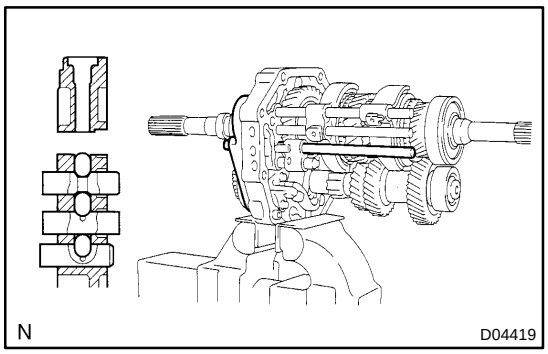

17. REMOVE SHIFT FORK SHAFT NO. 3 AND SHIFT FORK NO. 3

(a) Pull out the shift fork shaft No. 3 from the shift fork No. 3, reverse shift fork and intermediate plate.

(b) Remove the shift fork No. 3 from the groove of the hub sleeve No. 3.

(c) Using a magnetic finger, remove the interlock pin from the intermediate plate.

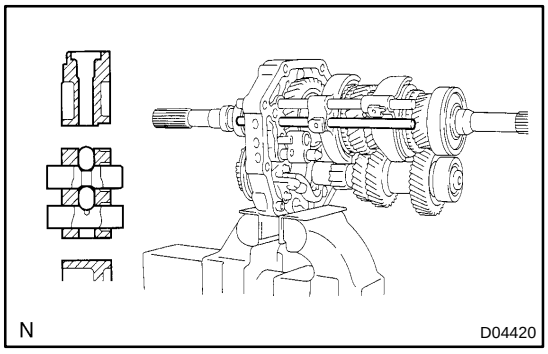

18. REMOVE SHIFT FORK SHAFT NO. 1 AND SHIFT FORK NO. 1

(a) Pull out the shift fork shaft No. 1 with the straight pin from the shift fork No. 1 and intermediate plate.

(b) Using a magnetic finger, remove the interlock pin from the intermediate plate.

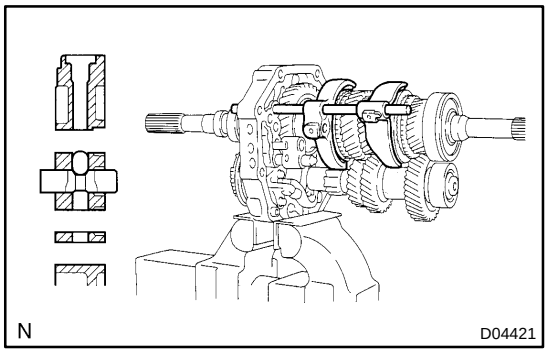

19. REMOVE SHIFT FORK SHAFT NO. 2 AND SHIFT FORK NO. 2

(a) Pull out the shift fork shaft No. 2 from the shift forks No. 1, No. 2 and intermediate plate.

(b) Remove the shift fork No. 1 and No. 2 from the groove of the hub sleeves No. 1 and No. 2.

(c) Using a magnetic finger, remove the interlock pin from the intermediate plate.

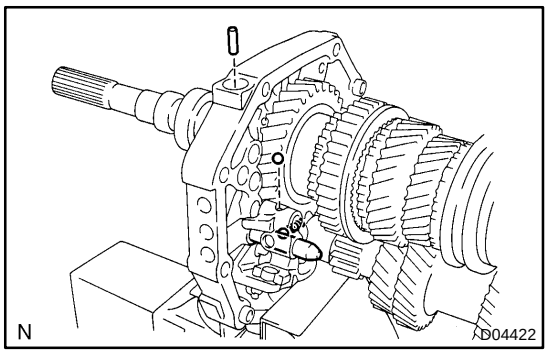

20. REMOVE SHIFT FORK SHAFT NO. 4

(a) Using a magnetic finger, remove the ball.

(b) Pull out the shift fork shaft No. 4 from the reverse shift fork and intermediate plate.

NOTICE:

Take care of the ball in the reverse shift fork. It will spring out when you pull out the shift fork shaft No. 4.

(c) Using a magnetic finger, remove the spring from the reverse shift fork.

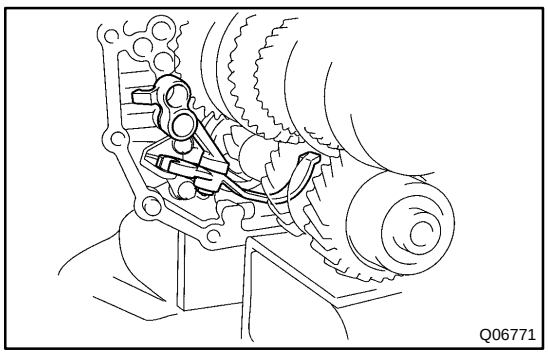

21. REMOVE REVERSE SHIFT FORK AND ARM

(a) Remove the reverse shift fork and arm.

HINT:

At the time of reassembly, please refer to the following item.

Align the reverse shift arm with the pivot of the reverse shift arm bracket.

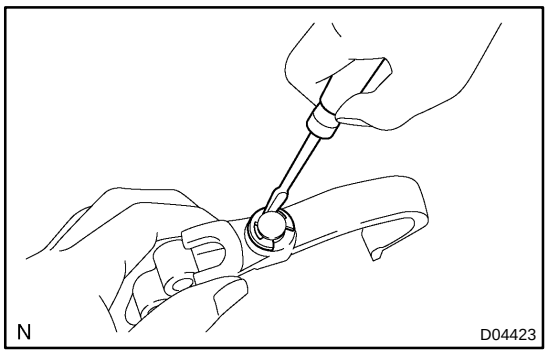

(b) Using a screwdriver, remove the E–ring.
(c) Separate the reverse shift fork and arm.

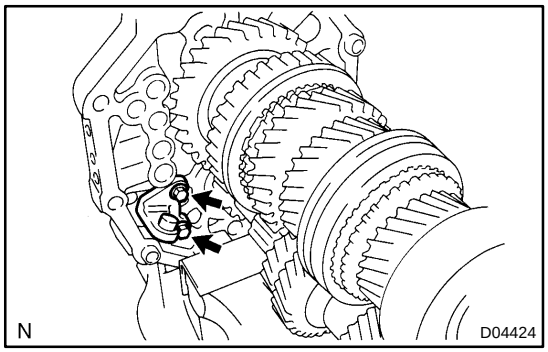

22. REMOVE REVERSE SHIFT ARM BRACKET

Remove the 2 bolts and reverse shift arm bracket.

Torque: 18 N·m (185 kgf·cm, 13 ft·lbf)

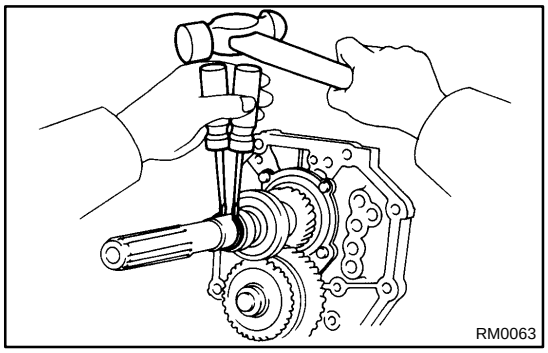

23. 2WD:
REMOVE SPEEDOMETER DRIVE GEAR

(a) Using 2 screwdrivers and a hammer, tap out the rear snap ring, and remove the speedometer drive gear and ball.
(b) Using 2 screwdrivers and a hammer, tap out the front snap ring, and remove the drive gear.

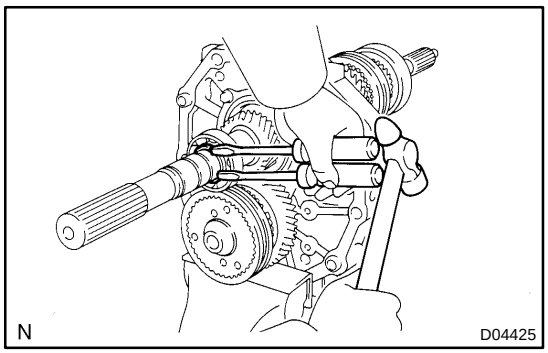

24. REMOVE OUTPUT SHAFT REAR BEARING

(a) Using 2 screwdrivers and a hammer, tap out the snap ring.

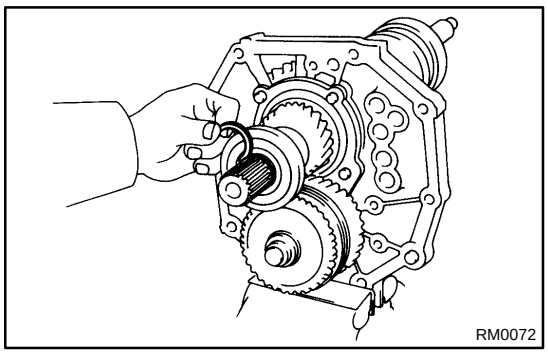

HINT:
At the time of reassembly, please refer to the following item.
Select a snap ring that allows the minimum axial play.

Mark	Thickness mm (in.)
A	2.65 – 2.70 (0.1043 – 0.1063)
B	2.70 – 2.75 (0.1063 – 0.1083)
C	2.75 – 2.80 (0.1083 – 0.1102)
D	2.80 – 2.85 (0.1102 – 0.1122)
E	2.85 – 2.90 (0.1122 – 0.1142)
F	2.90 – 2.95 (0.1142 – 0.1161)
G	2.95 – 3.00 (0.1161 – 0.1181)
H	3.00 – 3.05 (0.1181 – 0.1201)
J	3.05 – 3.10 (0.1201 – 0.1220)
K	3.10 – 3.15 (0.1220 – 0.1240)
L	3.15 – 3.20 (0.1240 – 0.1260)
M	3.20 – 3.25 (0.1260 – 0.1280)
N	3.25 – 3.30 (0.1280 – 0.1299)
P	3.30 – 3.35 (0.1299 – 0.1319)
Q	3.35 – 3.40 (0.1319 – 0.1339)
R	3.40 – 3.45 (0.1339 – 0.1358)
S	3.45 – 3.50 (0.1358 – 0.1378)

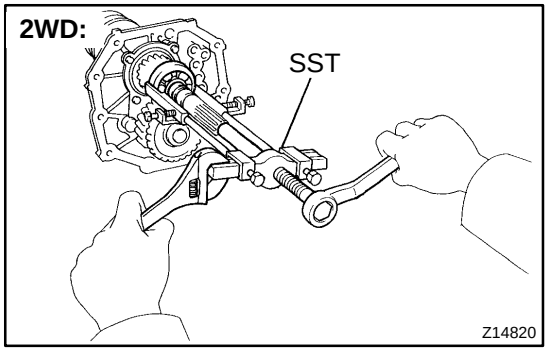

(b) 2WD:
Using SST, remove the rear bearing.
SST 09950–40011 (09951–04010, 09952–04010, 09953–04020, 09954–04030, 09955–04061, 09958–04011)

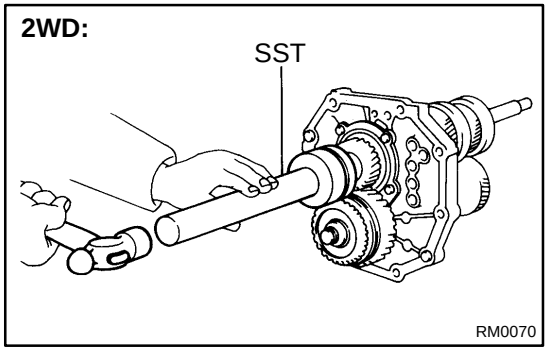

HINT:
At the time of reassembly, please refer to the following items.
Using SST and a hammer, drive in a new bearing.
SST 09309–35010

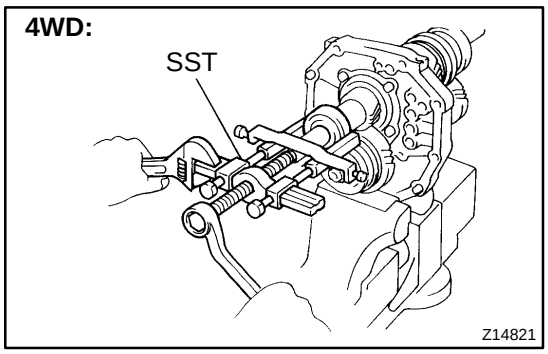

(c) 4WD:
Using SST, remove the rear bearing.
SST 09950–40011 (09951–04010, 09952–04010, 09953–04020, 09954–04010, 09955–04061, 09958–04011)

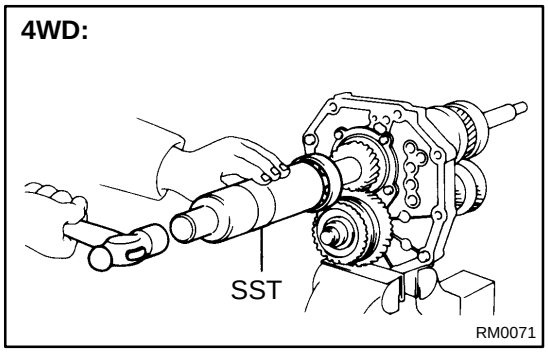

HINT:
At the time of reassembly, please refer to the following items.
Using SST and a hammer, drive in a new bearing.
SST 09316–60011 (09316–00011, 09316–00071)

25. REMOVE SPACER

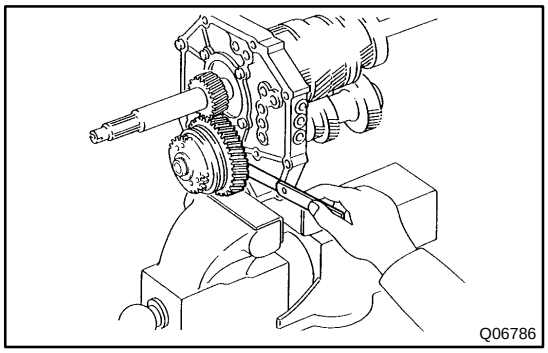

26. INSPECT COUNTER 5TH GEAR THRUST CLEARANCE

Using a feeler gauge, measure the counter 5th gear thrust clearance.

Standard clearance:
0.10 – 0.35 mm (0.0039 – 0.0138 in.)
Maximum clearance: 0.40 mm (0.0157 in.)

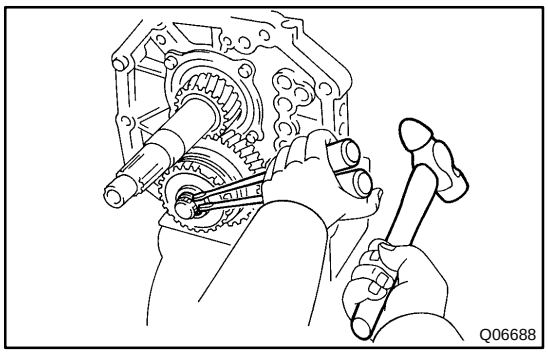

27. REMOVE GEAR SPLINE PIECE NO. 5, AND SYNCHRONIZER RING, NEEDLE ROLLER BEARING AND COUNTER 5TH GEAR WITH HUB SLEEVE NO. 3

(a) Using 2 screwdrivers and a hammer, tap out the snap ring.

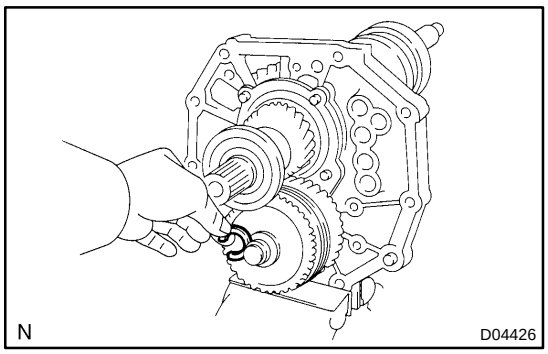

HINT:
At the time of reassembly, please refer to the following item.
Select a snap ring that allows the minimum axial play.

Mark	Thickness mm (in.)
A	2.80 – 2.85 (0.1102 – 0.1122)
B	2.85 – 2.90 (0.1122 – 0.1142)
C	2.90 – 2.95 (0.1142 – 0.1161)
D	2.95 – 3.00 (0.1161 – 0.1181)
E	3.00 – 3.05 (0.1181 – 0.1201)
F	3.05 – 3.10 (0.1201 – 0.1220)
G	3.10 – 3.15 (0.1220 – 0.1240)

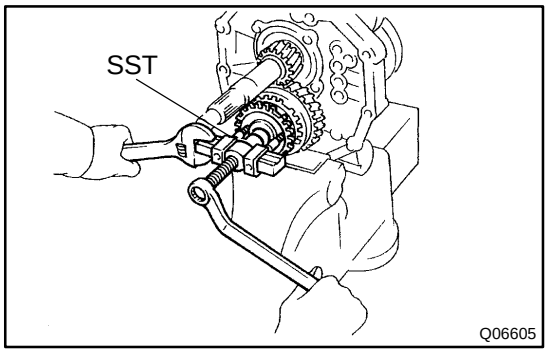

(b) Using SST, remove the gear spline piece No. 5.
SST 09950–50013 (09951–05010, 09552–05010, 09953–05020, 09954–05021)

(c) Remove the counter 5th gear with the hub sleeve No.3.

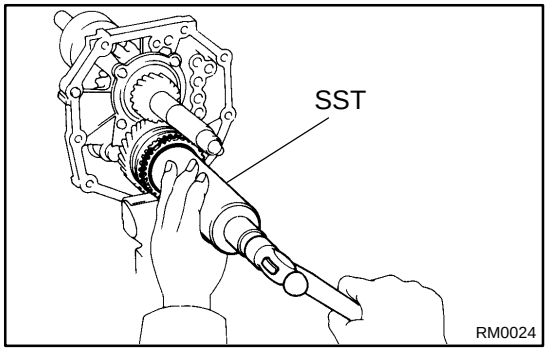

HINT:
At the time of reassembly, please refer to the following items.

▲ Using SST and a hammer, drive in the gear spline piece No. 5 with the synchronizer ring slots aligned with the shifting keys.
SST 09316–60011 (09316–00011)

▲ When installing the gear spline piece No. 5, support the counter gear in front with a 1.4 – 2.3 kg (3 – 5 lb) hammer or equivalent.

28. REMOVE NEEDLE ROLLER BEARING, THRUST WASHER AND STRAIGHT PIN FROM COUNTER GEAR

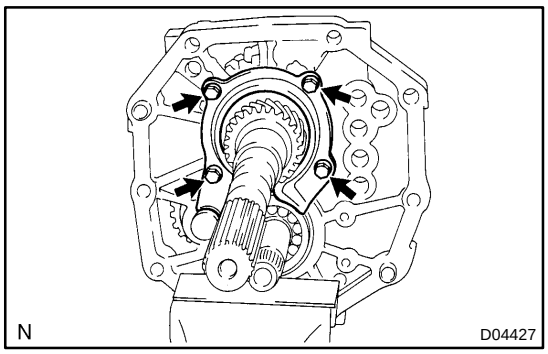

29. REMOVE REAR BEARING RETAINER

Remove the 4 bolts and rear bearing retainer.

HINT:

At the time of reassembly, please refer to the following item.

Align the rear bearing retainer with the reverse idler gear shaft groove.

Torque: 18 N·m (185 kgf·cm, 13 ft·lbf)

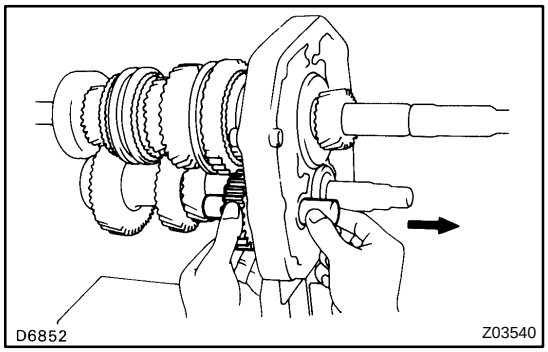

30. REMOVE REVERSE IDLER GEAR AND SHAFT

Pull out the shaft toward the rear and remove the reverse idler gear.

HINT:

At the time of reassembly, please refer to the following item.

Align the reverse shift arm with the reverse idler gear shaft.

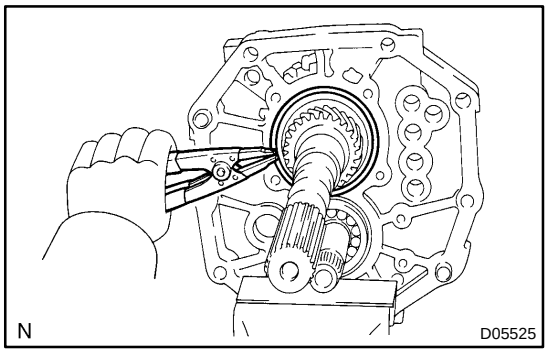

31. REMOVE OUTPUT SHAFT CENTER BEARING SNAP RING

Using a snap ring expander, remove the snap ring.

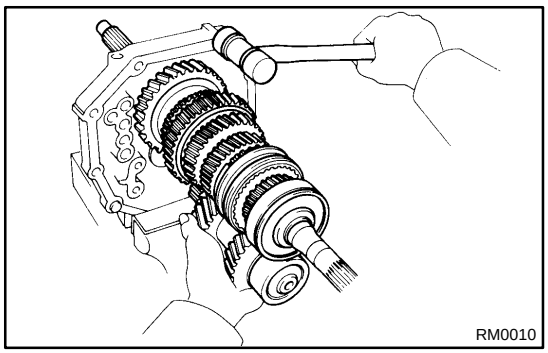

32. REMOVE OUTPUT SHAFT AND COUNTER GEAR FROM INTERMEDIATE PLATE

(a) Remove the output shaft, counter gear and input shaft as a unit from the intermediate plate by pulling on the counter gear and tapping on the intermediate plate with a plastic hammer.

(b) Remove the input shaft with the needle roller bearing from the output shaft.

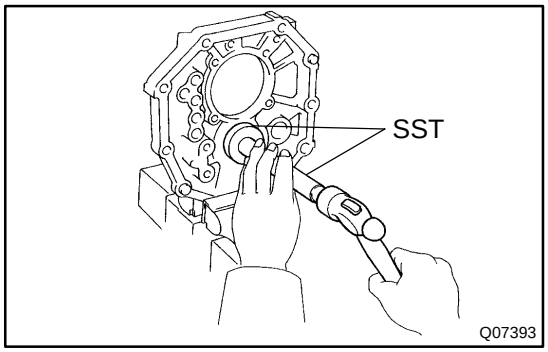

33. REMOVE COUNTER REAR BEARING FROM INTERMEDIATE PLATE

Using SST and a hammer, remove the counter rear bearing.

SST 09950–60010 (09951–00620), 09950–70010 (09951–07150)

34. SEPARATE INPUT SHAFT ASSEMBLY AND OUTPUT SHAFT ASSEMBLY

(a) Separate the input shaft assembly and output shaft assembly.

(b) Remove the synchronizer ring and bearing.

MT04S–02

REASSEMBLY

Reassembly is in the reverse order of disassembly (See page MT–14).

HINT:

Coat all of the sliding and rotating surfaces with gear oil before reassembly.

NOTICE:

When working with FIPG material, you must observe the following items.

- **Using a razor blade and gasket scraper, remove all the old FIPG material from the gasket surfaces.**
- **Thoroughly clean all components to remove all the loose material.**
- **Clean both sealing surfaces with a non–residue solvent.**
- **Apply FIPG in an approx. 1 mm (0.04 in.) wide bead along the sealing surface.**
- **Parts must be assembled within 10 minutes of application. Otherwise, the FIPG material must be removed and reapplied.**

INPUT SHAFT

COMPONENTS

MT04T–02

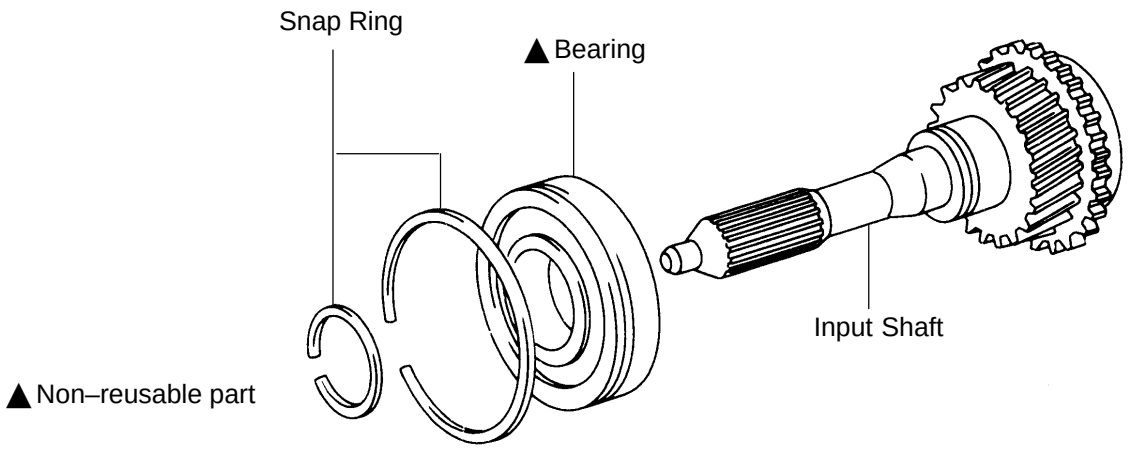

MT04U–02

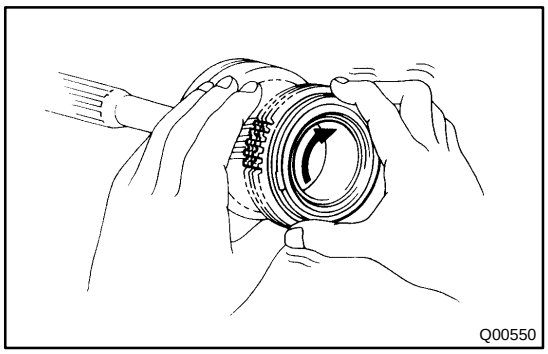

INSPECTION

INSPECT SYNCHRONIZER RING

(a) Check for wear or damage.

(b) Check the braking effect of the synchronizer ring.
Turn the synchronizer ring in one direction while pushing it to the gear cone. Check that the ring locks.

If the braking effect is insufficient, apply a small amount of the fine lapping compound between the synchronizer ring and gear cone. Lightly rub the synchronizer ring and gear cone together.

NOTICE:

Ensure the fine lapping compound is completely washed off after rubbing.

(c) Check again the braking effect of the synchronizer ring.

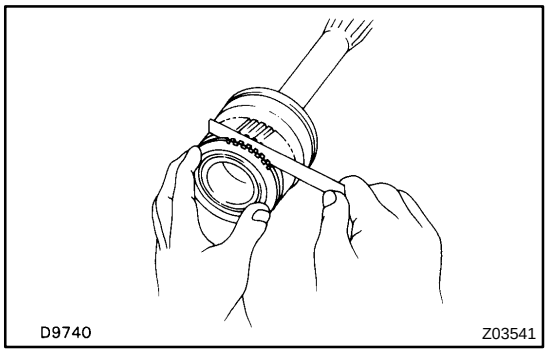

(d) Using a feeler gauge, measure the clearance between the synchronizer ring back and gear spline end.
Minimum clearance: 0.8 mm (0.031 in.)

If the clearance is less than the minimum, replace the synchronizer ring, and apply a small amount of the fine lapping compound on gear cone.

NOTICE:

Ensure the fine lapping compound is completely washed off after rubbing.

MT09K–01

REPLACEMENT

IF NECESSARY, REPLACE INPUT SHAFT BEARING

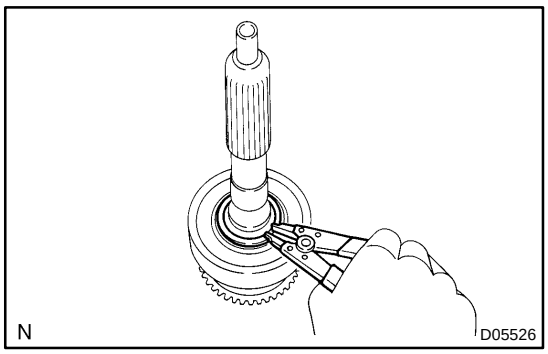

(a) Using a snap ring expander, remove the snap ring.

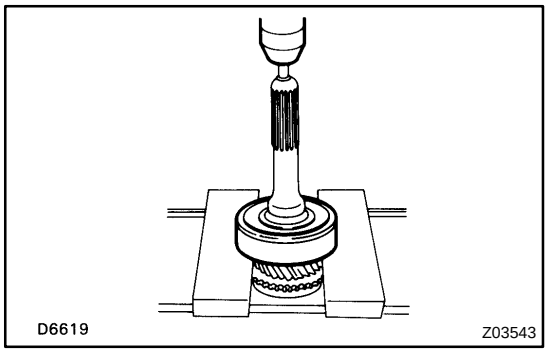

(b) Using a press, remove the bearing.

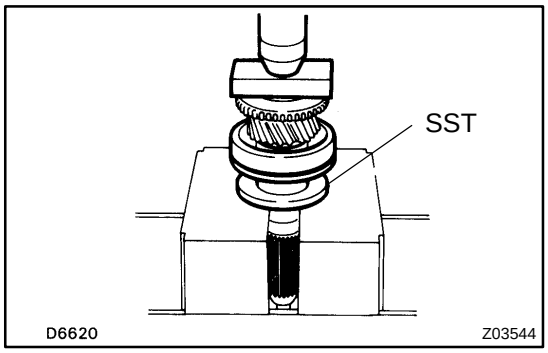

(c) Using SST and a press, install a new bearing.
SST 09506–35010

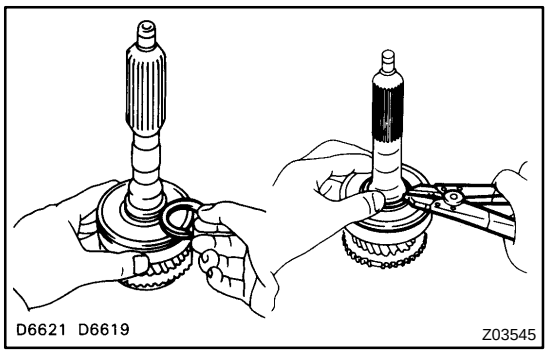

(d) Select a snap ring that allows minimum axial play.

Mark	Thickness mm (in.)
A	2.10 – 2.15 (0.0827 – 0.0846)
B	2.15 – 2.20 (0.0846 – 0.0866)
C	2.20 – 2.25 (0.0866 – 0.0886)
D	2.25 – 2.30 (0.0886 – 0.0906)
E	2.30 – 2.35 (0.0906 – 0.0925)
F	2.35 – 2.40 (0.0925 – 0.0945)
G	2.40 – 2.45 (0.0945 – 0.0965)

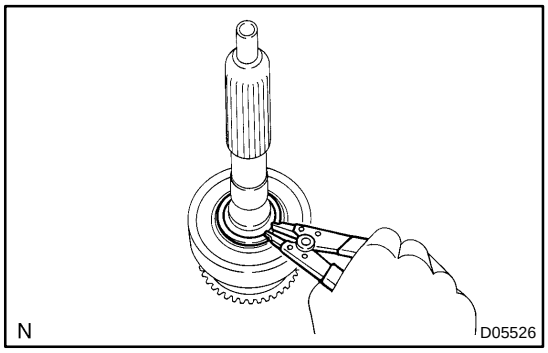

(e) Using a snap ring expander, install the snap ring.

OUTPUT SHAFT

MT04W–02

COMPONENTS

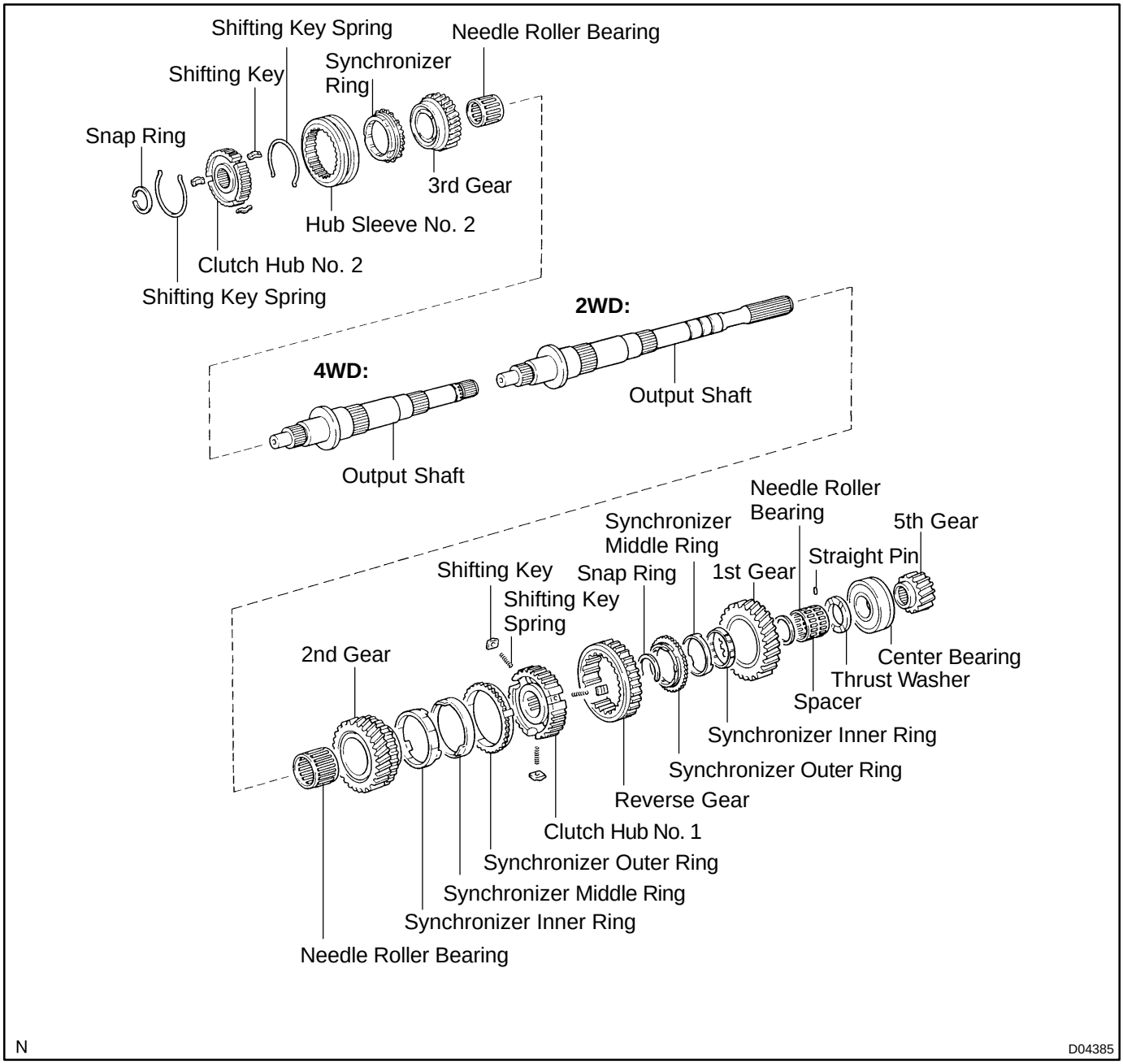

MT09L–01

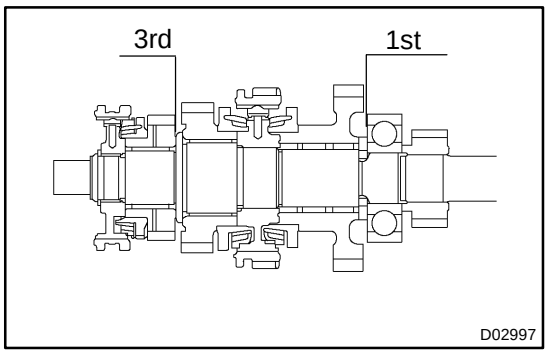

DISASSEMBLY

1. INSPECT EACH GEAR THRUST CLEARANCE

(a) Using a feeler gauge, measure the thrust clearance of 1st and 3rd gear.

Standard clearance:
1st gear: 0.20 – 0.45 mm (0.0078 – 0.0177 in.)
3rd gear: 0.10 – 0.25 mm (0.0039 – 0.0098 in.)
Maximum clearance:
1st gear: 0.50 mm (0.0197 in.)
3rd gear: 0.30 mm (0.0118 in.)

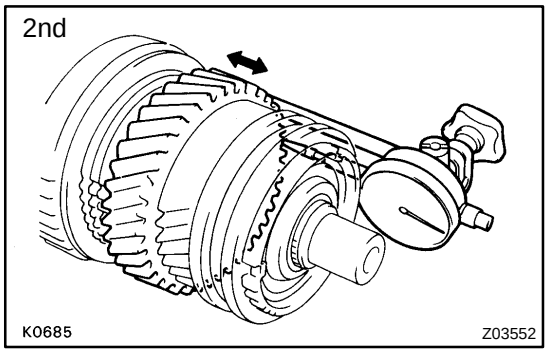

(b) Using a dial indicator, measure the thrust clearance of 2nd gear.

Standard clearance:
2nd gear: 0.10 – 0.25 mm (0.0039 – 0.0098 in.)
Maximum clearance:
2nd gear: 0.30 mm (0.0118 in.)

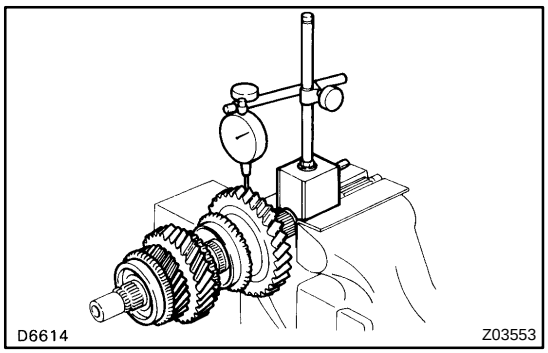

2. INSPECT EACH GEAR RADIAL CLEARANCE

Using a dial indicator, measure the radial clearance of each gear.

Standard clearance:
1st gear: 0.020 – 0.073 mm (0.0008 – 0.0029 in.)
2nd and 3rd gears:
0.015 – 0.068 mm (0.0006 – 0.0027 in.)
Maximum clearance:
1st gear: 0.160 mm (0.0063 in.)
2nd and 3rd gears: 0.160 mm (0.0063 in.)

If the clearance exceeds the maximum, replace the gear, needle roller bearing or shaft.

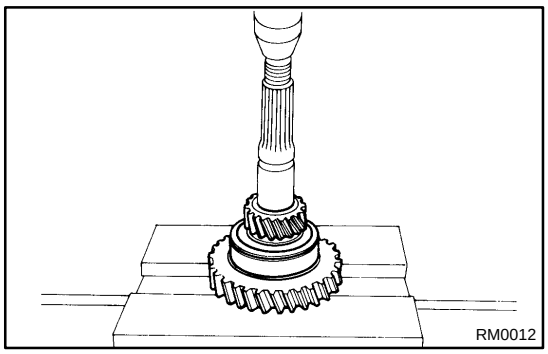

3. REMOVE 5TH GEAR, OUTPUT SHAFT CENTER BEARING AND 1ST GEAR ASSEMBLY

(a) Using a press, remove the 5th gear, center bearing, thrust washer and 1st gear.
(b) Remove the synchronizer inner ring, middle ring and outer ring from the 1st gear.
(c) Remove the straight pin and needle roller bearing.
(d) Remove the spacer.

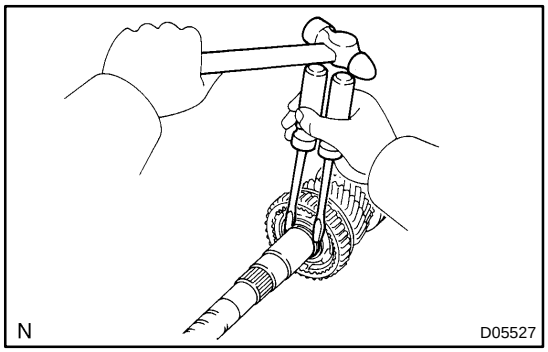

4. REMOVE REVERSE GEAR ASSEMBLY AND 2ND GEAR ASSEMBLY

(a) Using 2 screwdrivers and a hammer, tap out the snap ring.

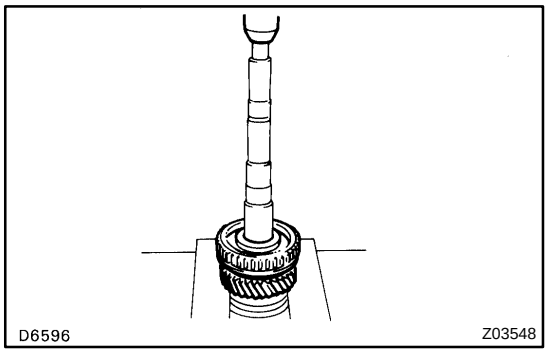

(b) Using a press, remove the reverse gear assembly and 2nd gear assembly from the output shaft.
(c) Remove the needle roller bearing from the output shaft.
(d) Remove the synchronizer inner ring, middle ring and outer ring from the 2nd gear.

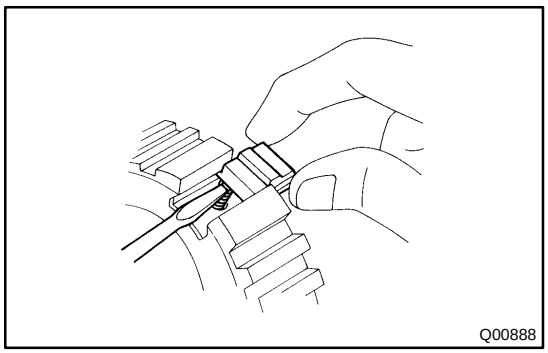

5. REMOVE REVERSE GEAR, SHIFTING KEY AND SPRING FROM CLUTCH HUB NO. 1

(a) Remove the reverse gear from the clutch hub No. 1.
(b) Using a screwdriver, push the shifting key spring, remove the 3 shifting keys and key springs from the clutch hub No.1.

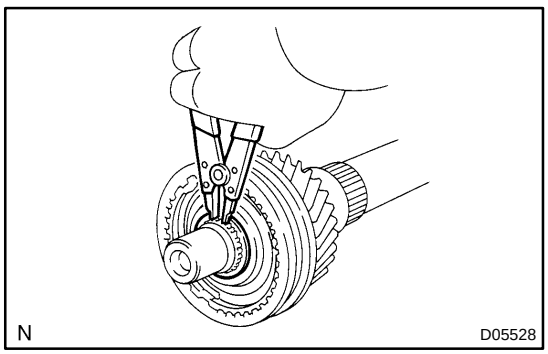

6. REMOVE HUB SLEEVE NO. 2 ASSEMBLY AND 3RD GEAR ASSEMBLY

(a) Using a snap ring expander, remove the snap ring.

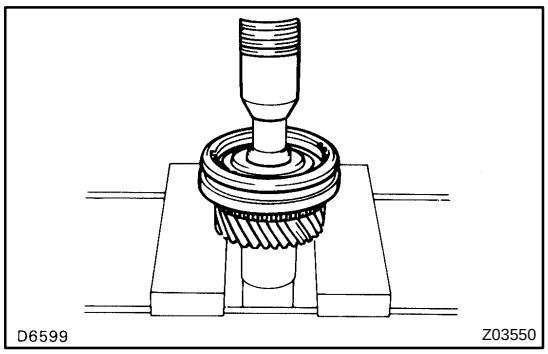

(b) Using a press, remove the hub sleeve No. 2 assembly and 3rd gear assembly from the output shaft.
(c) Remove the needle roller bearing from the output shaft.
(d) Remove the synchronizer ring from the 3rd gear.

7. REMOVE HUB SLEEVE NO. 2, SHIFTING KEY AND SPRING FROM CLUTCH HUB NO. 2.

(a) Remove the hub sleeve No. 2 from the clutch hub No. 2.
(b) Using a screwdriver, push the shifting key spring, and remove the 3 shifting keys and 2 key springs from the clutch hub No. 2.

MT04Y–02

INSPECTION

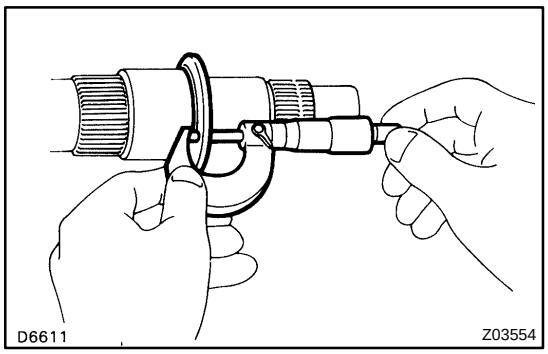

1. INSPECT OUTPUT SHAFT

(a) Using a micrometer, measure the output shaft flange thickness.

Minimum thickness: 4.70 mm (0.1850 in.)

If the thickness is less than the minimum, replace the output shaft.

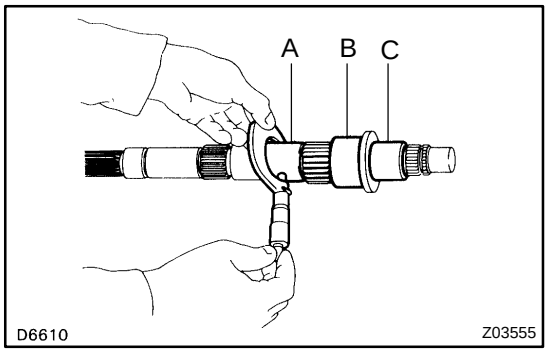

(b) Using a micrometer, measure the outer diameter of the output shaft journal.

Minimum diameter:
A 1st gear: 38.860 mm (1.5299 in.)
B 2nd gear: 46.860 mm (1.8449 in.)
C 3rd gear: 37.860 mm (1.4905 in.)

If the outer diameter is less than the minimum, replace the output shaft.

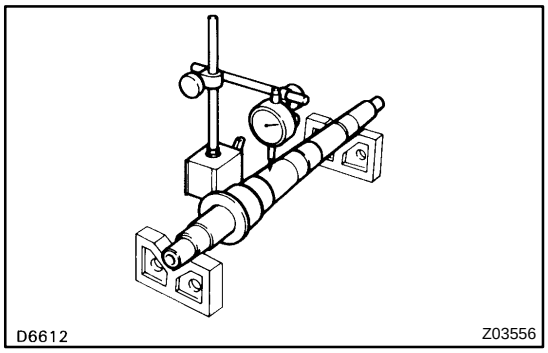

(c) Using a dial indicator, check the shaft runout.

Maximum runout: 0.06 mm (0.0024 in.)

If the runout exceeds the maximum, replace the output shaft.

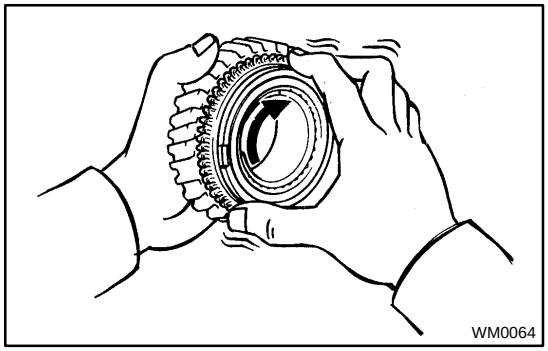

2. INSPECT 3RD GEAR SYNCHRONIZER RING

(a) Check for wear or damage.
(b) Check the braking effect of the synchronizer ring.
(c) Turn the synchronizer ring in one direction while pushing it to the gear cone. Check that the ring locks.

If the braking effect is insufficient, apply a small amount of the fine lapping compound between the synchronizer ring and gear cone. Lightly rub the synchronizer ring and gear cone together.

NOTICE:

Ensure the fine lapping compound is completely washed off after rubbing.

(d) Check again the braking effect of the synchronizer ring.

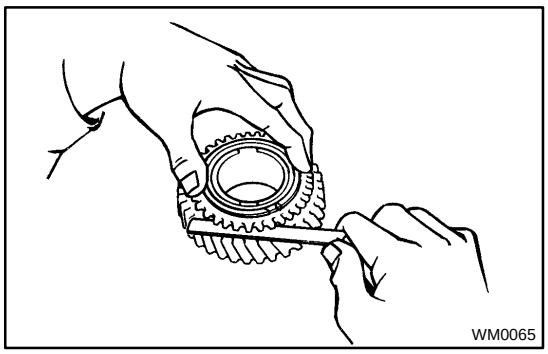
WM0065

(e) Using a feeler gauge, measure the clearance between the synchronizer ring back and gear spline end.

Minimum clearance: 0.8 mm (0.031 in.)

If the clearance is less than the minimum, replace the synchronizer ring, and apply a small amount of the fine lapping compound on the gear cone.

NOTICE:

Ensure the fine lapping compound is completely washed off after rubbing.

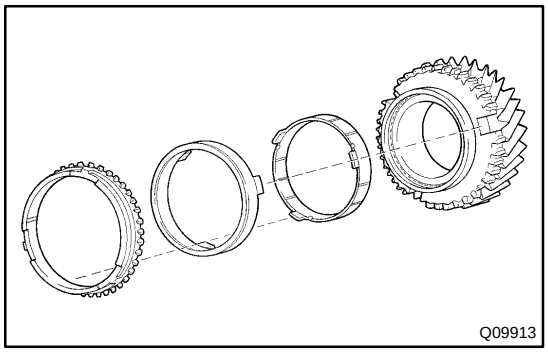
Q09913

3. INSPECT 1ST AND 2ND GEARS SYNCHRONIZER RING

(a) Check for wear or damage.

(b) Install the synchronizer inner ring, middle ring and outer ring to each gear.

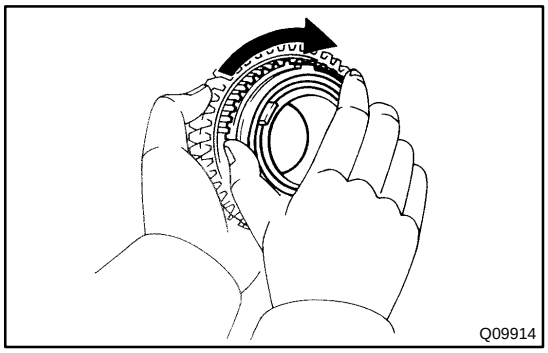
Q09914

(c) Check the braking effect of the synchronizer ring. Turn the synchronizer ring in one direction while pushing it to the gear cone. Check that the ring locks.

If it does not lock, replace the synchronizer ring.

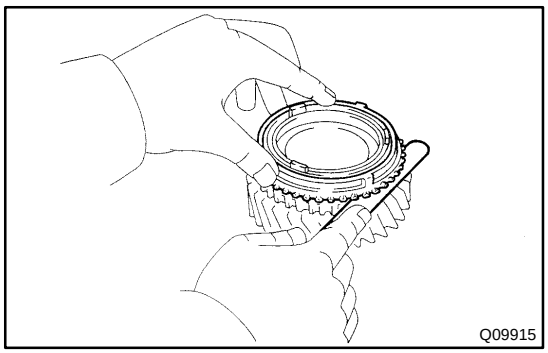
Q09915

(d) Using a feeler gauge, measure the clearance between the synchronizer ring back and gear spline end.

Minimum clearance: 0.8 mm (0.031 in.)

If the clearance is less than the minimum, replace the synchronizer ring.

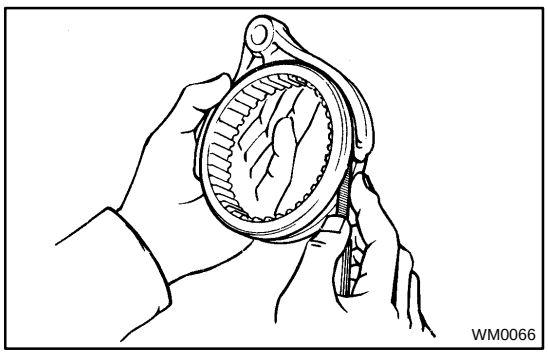
WM0066

4. INSPECT SHIFT FORK AND HUB SLEEVE CLEARANCE

Using a feeler gauge, measure the clearance between the hub sleeve and shift fork.

Maximum clearance: 1.0 mm (0.039 in.)

If the clearance exceeds the maximum, replace the shift fork or hub sleeve.

COUNTER GEAR AND REVERSE IDLER GEAR

MT050–02

COMPONENTS

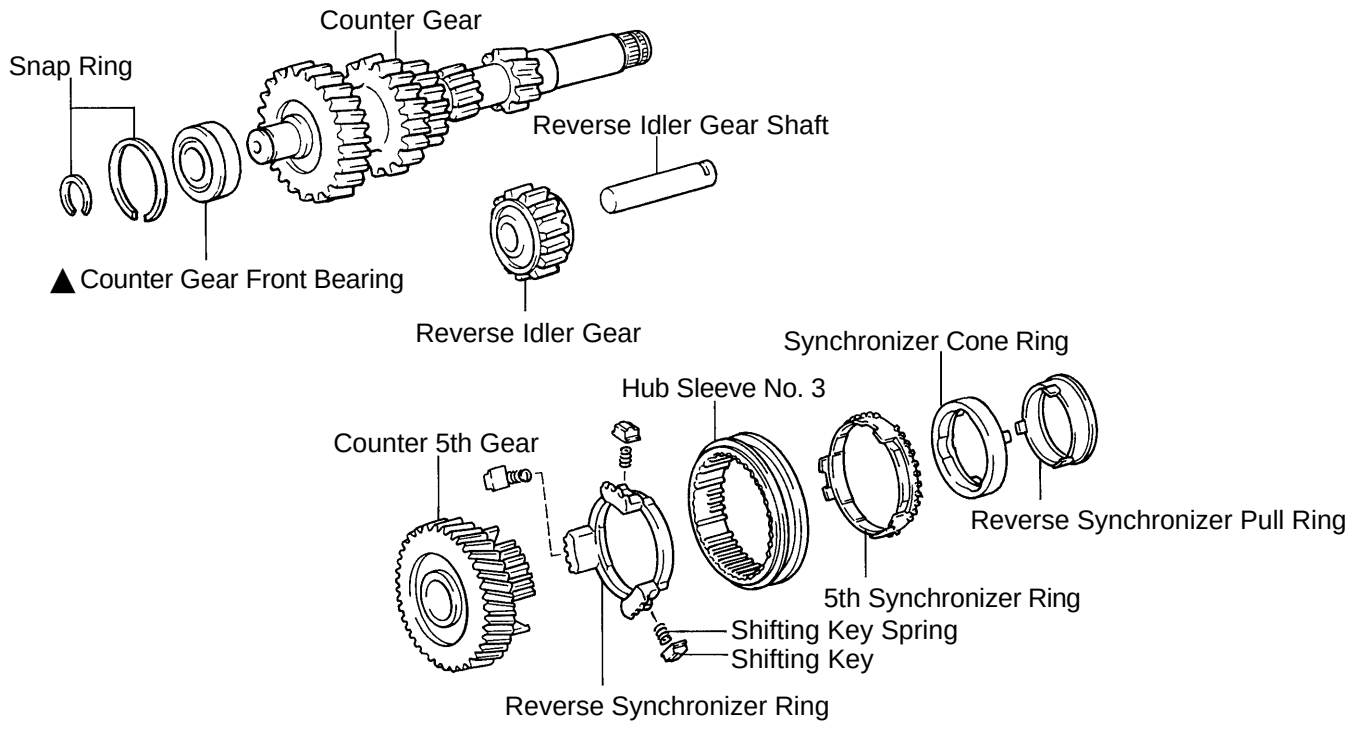

MT051–02

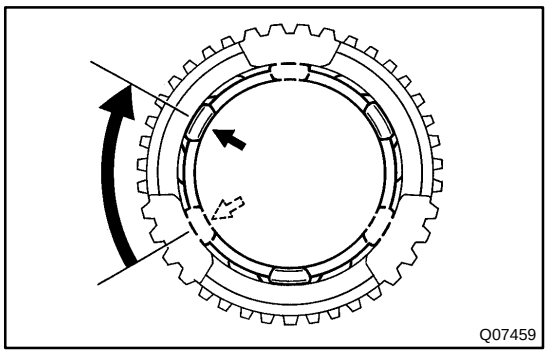

DISASSEMBLY

REMOVE HUB SLEEVE NO. 3, SHIFTING KEY AND SPRING FROM SYNCHRONIZER RING

(a) Remove the synchronizer ring assembly from the hub sleeve No. 3.

(b) Turn the reverse synchronizer pull ring.

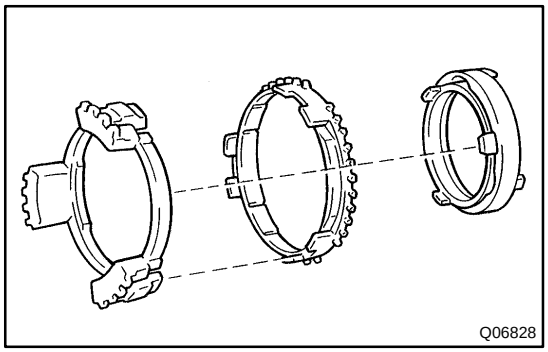

(c) Remove the reverse synchronizer ring and 5th synchronizer ring from the synchronizer pull ring and cone ring.

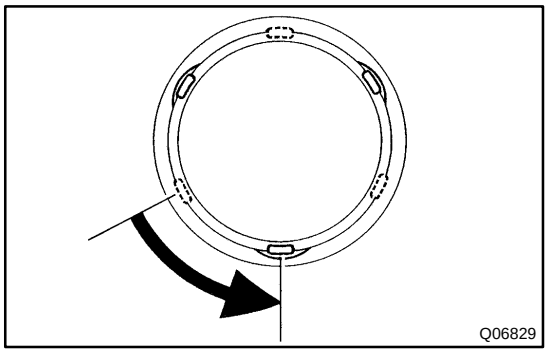

(d) Turn the reverse synchronizer pull ring, separate the pull ring and cone ring.

(e) Push the shifting key and spring, and remove the 3 shifting keys and springs from the reverse synchronizer ring.

MT052–02

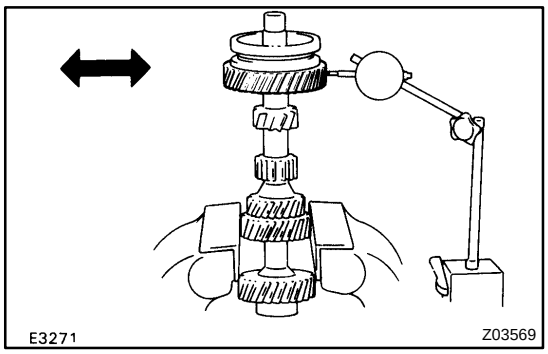

INSPECTION

1. INSPECT 5TH GEAR RADIAL CLEARANCE

(a) Install the spacer, counter 5th gear and needle roller bearings.

(b) Using a dial indicator, measure the counter 5th gear radial clearance.

Standard clearance:
0.015 – 0.068 mm (0.0006 – 0.0027 in.)
Maximum clearance:
0.160 mm (0.0063 in.)

If the clearance exceeds the maximum, replace the gear bearing or shaft.

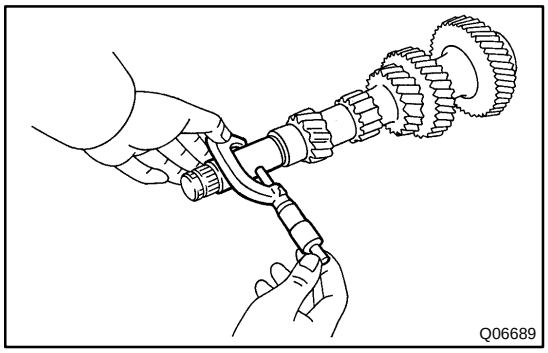

2. INSPECT COUNTER GEAR

Using a micrometer, measure the outer diameter of the counter gear journal.

Minimum diameter: 27.860 mm (1.0968 in.)

If the outer diameter is less than the minimum, replace the counter gear.

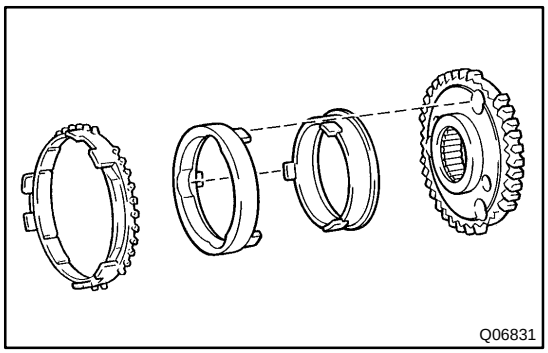

3. INSPECT 5TH SYNCHRONIZER RING

(a) Check for wear or damage.

(b) Install the synchronizer pull ring, cone ring and outer ring to the gear spline piece No. 5.

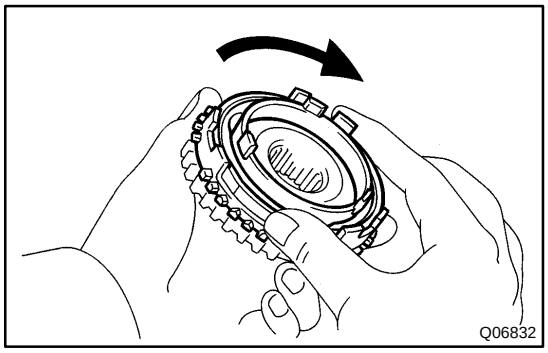

(c) Check the braking effect of the synchronizer ring. Turn the synchronizer ring in one direction while pushing it to the gear cone. Check that the ring locks.

If it does not lock, replace the synchronizer ring.

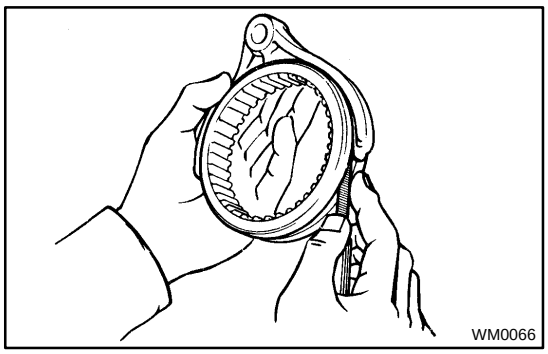

4. INSPECT SHIFT FORK AND HUB SLEEVE CLEARANCE

Using a feeler gauge, measure the clearance between the hub sleeve and shift fork.

Maximum clearance: 1.0 mm (0.039 in.)

If the clearance exceeds the maximum, replace the shift fork or hub sleeve.

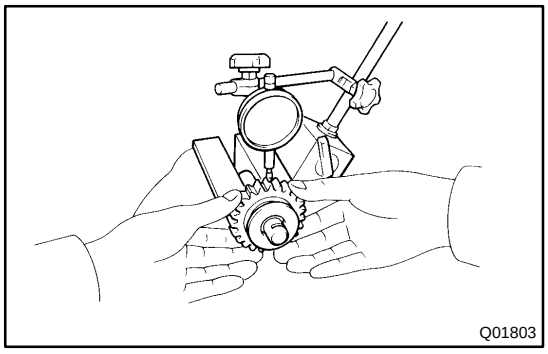

5. INSPECT REVERSE IDLER GEAR RADIAL CLEARANCE

Using a dial indicator, measure the reverse idler gear radial clearance.

Standard clearance:
0.040 – 0.082 mm (0.0016 – 0.0032 in.)
Maximum clearance:
0.130 mm (0.0051 in.)

If the clearance exceeds the maximum, replace the reverse idler gear or reverse idler gear shaft.

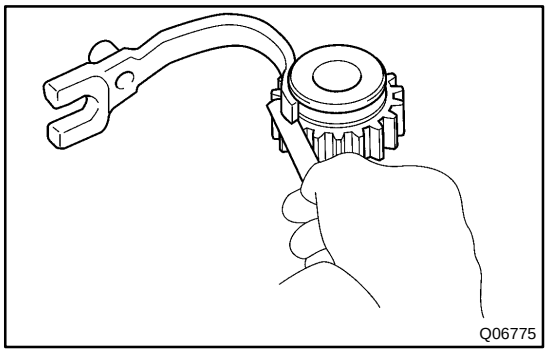

6. INSPECT REVERSE IDLER GEAR AND SHIFT ARM CLEARANCE

Using a feeler gauge, measure the clearance between the reverse idler gear and shift arm.

Standard clearance:
0.05 – 0.35 mm (0.0020 – 0.0138 in.)
Maximum clearance:
0.50 mm (0.0197 in.)

If the clearance exceeds the maximum, replace the shift arm or reverse idler gear.

MT09N–01

REPLACEMENT

IF NECESSARY, REPLACE COUNTER GEAR FRONT BEARING

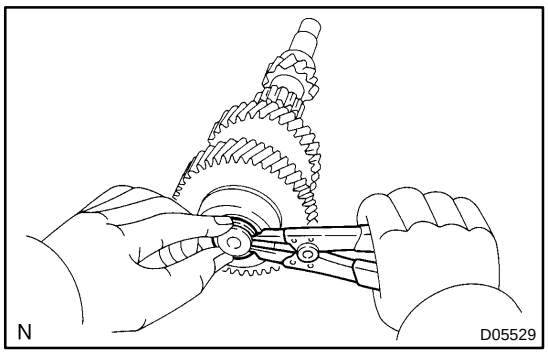

(a) Using a snap ring expander, remove the snap ring.

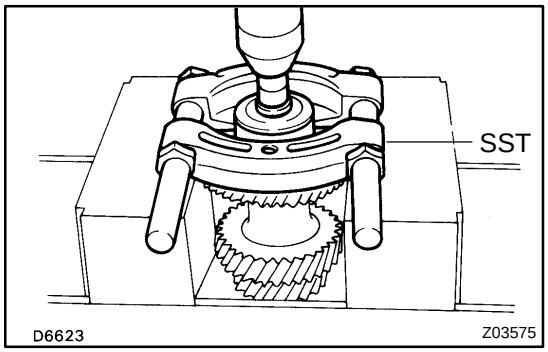

(b) Using SST and a press, remove the bearing.
SST 09950–00020

(c) Replace the side race.

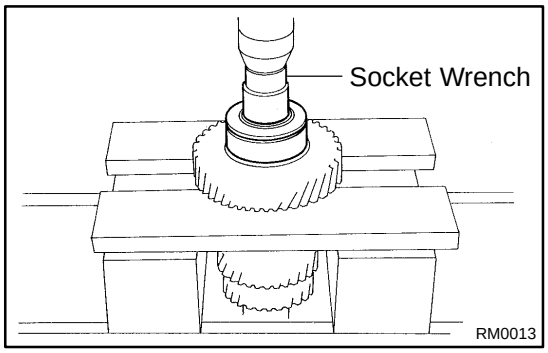

(d) Using a socket wrench and press, install a new bearing and side race.

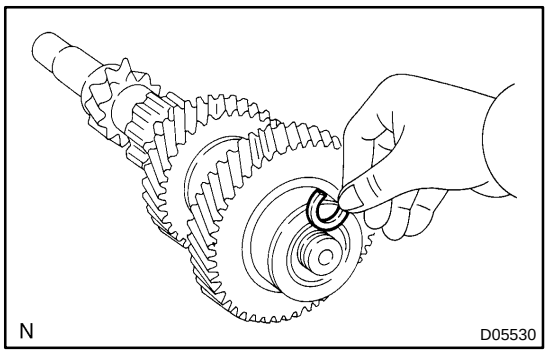

(e) Select a snap ring that allows the minimum axial play.

Mark	Thickness mm (in.)
A	2.00 – 2.05 (0.0787 – 0.0807)
B	2.05 – 2.10 (0.0807 – 0.0827)
C	2.10 – 2.15 (0.0827 – 0.0846)
D	2.15 – 2.20 (0.0846 – 0.0866)
E	2.20 – 2.25 (0.0866 – 0.0886)
F	2.25 – 2.30 (0.0886 – 0.0906)

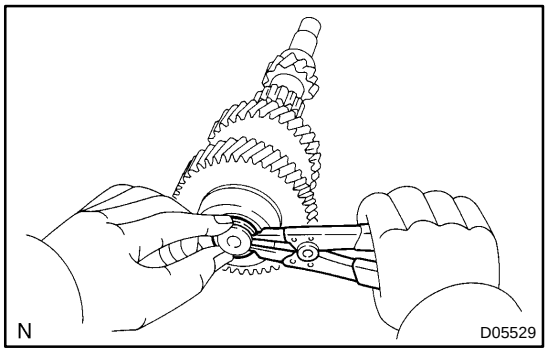

(f) Using a snap ring expander, install the snap ring.

MT054–02

REASSEMBLY

INSTALL SYNCHRONIZER RING ASSEMBLY TO HUB SLEEVE NO. 3

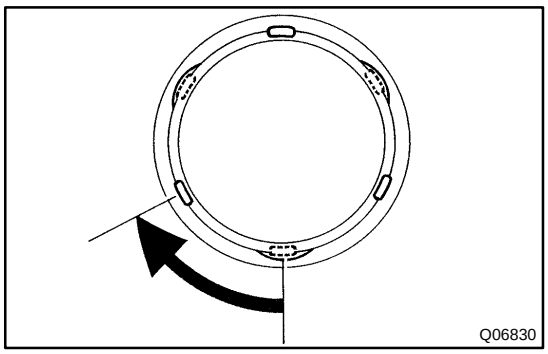

(a) Put the key spring into the hole of the shifting key.
(b) Push the 3 shifting keys with the 3 key springs to the reverse synchronizer ring.
(c) Install the synchronizer cone ring to the reverse synchronizer pull ring and turn the pull ring.

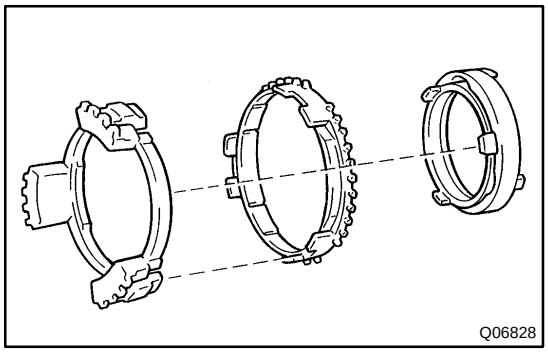

(d) Install the 5th synchronizer ring.
(e) Install the reverse synchronizer ring.

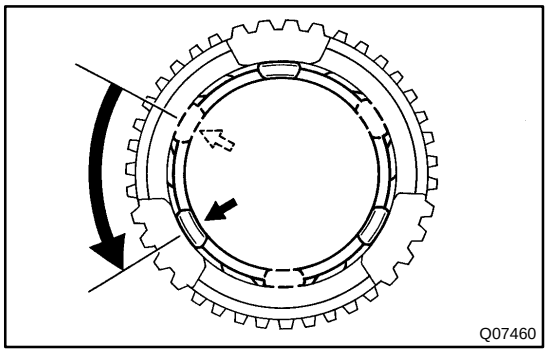

(f) Turn the reverse synchronizer pull ring.

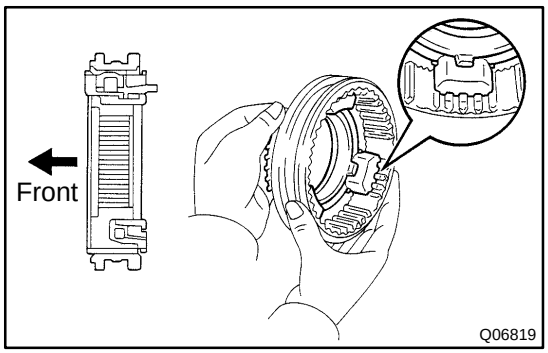

(g) While pushing the 3 shifting keys, install the synchronizer ring assembly to the hub sleeve No. 3.

FRONT BEARING RETAINER OIL SEAL

COMPONENTS

MT055–02

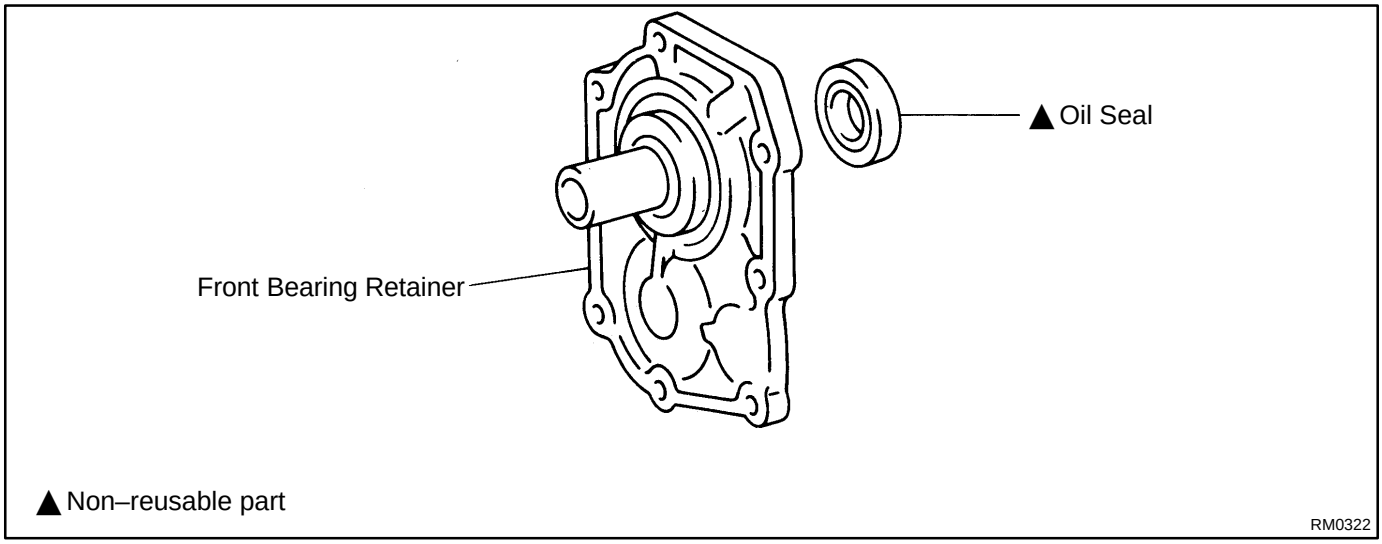

MT056–02

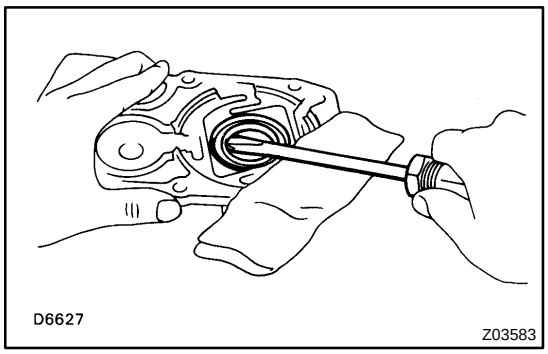

REPLACEMENT

IF NECESSARY, REPLACE FRONT BEARING RETAINER OIL SEAL

(a) Using a screwdriver, pry out the oil seal.

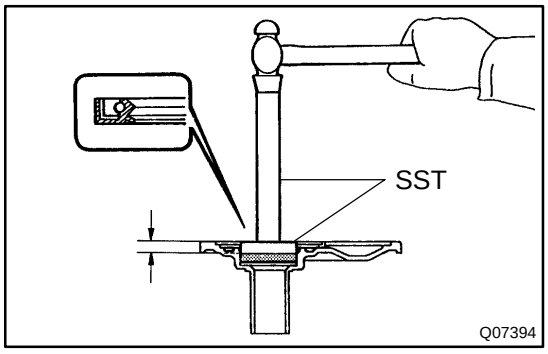

(b) Using SST and a hammer, drive in a new oil seal.
SST 09950–60010 (09951–00510), 09950–70010 (09951–07150)
Drive in depth:
11.7 ± 0.5 mm (0.461 ± 0.020 in.) from retainer end

(c) Coat the oil seal lip with MP grease.

EXTENSION HOUSING AND TRANSFER ADAPTOR

COMPONENTS

MT058–02

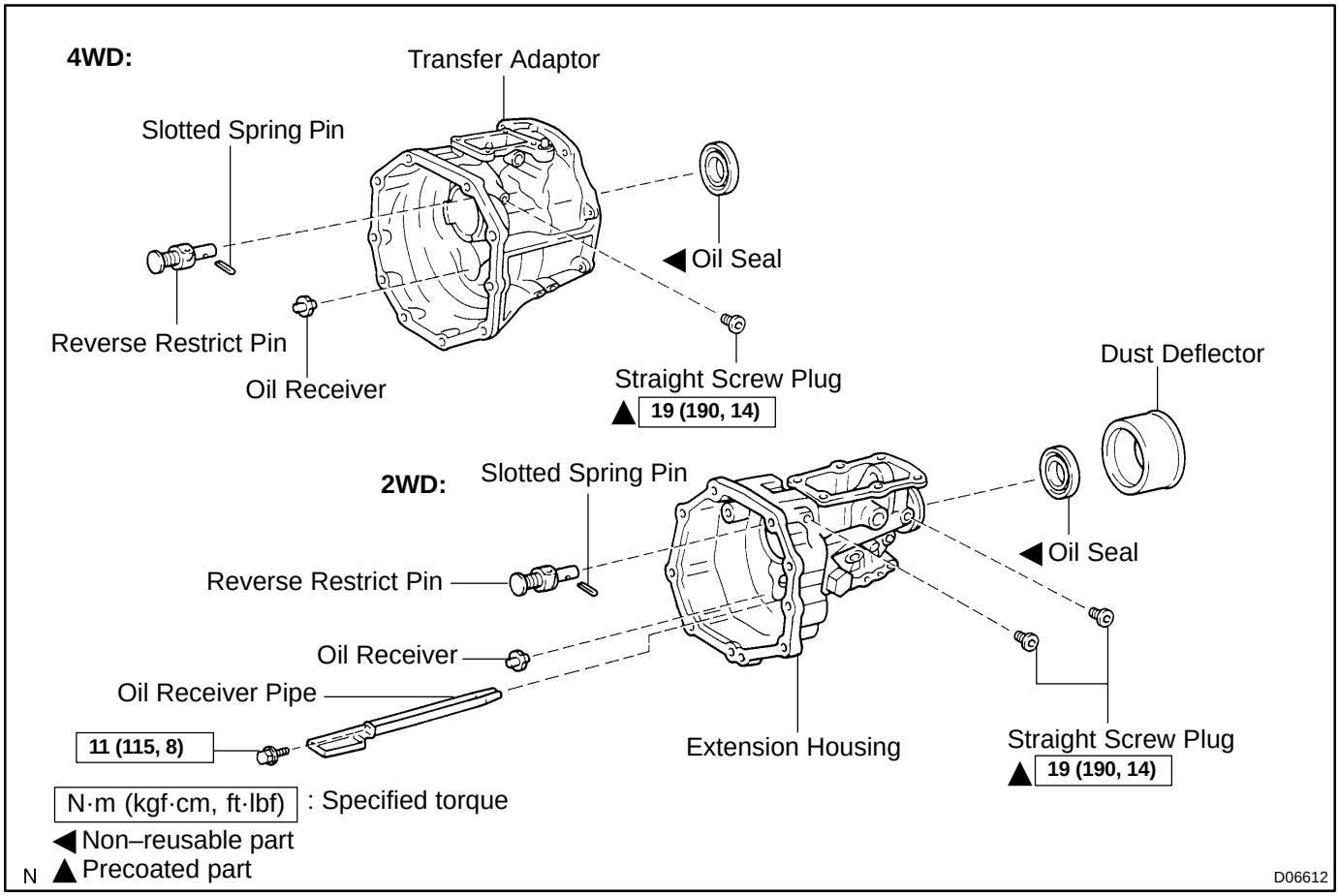

MT09O–01

REPLACEMENT

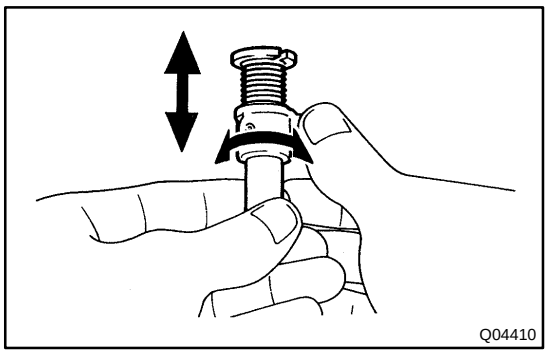

1. IF NECESSARY, REPLACE REVERSE RESTRICT PIN

(a) Remove the reverse restrict pin.
  (1) Using a torx socket wrench (T40), remove the screw plug.
  (2) Using a pin punch and hammer, drive out the slotted spring pin.
  (3) Remove the reverse restrict pin.

(b) Inspect the reverse restrict pin.
Turn and push the reverse restrict pin by hand. Check for smooth operation.

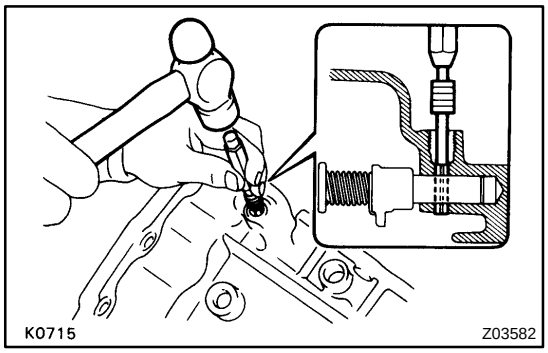

(c) Install the reverse restrict pin.
  (1) Install the reverse restrict pin to the extension housing or transfer adaptor.
  (2) Using a pin punch and hammer, drive in the slotted spring pin, as shown.
  (3) Apply sealant to the plug threads.

Sealant:
Part No.08833–00080, THREE BOND 1344, LOCTITE 242 or equivalent

  (4) Using a torx socket wrench (T40), install and torque the screw plug.

Torque: 19 N·m (190 kgf·cm, 14 ft·lbf)

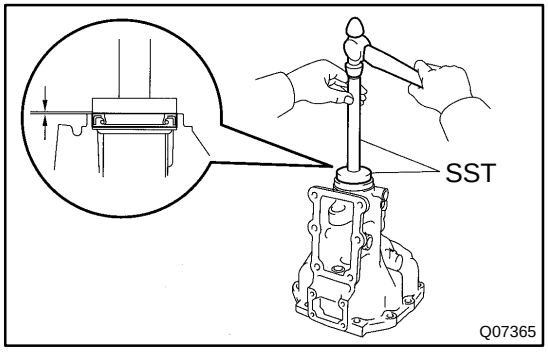

2. 2WD:
IF NECESSARY, REPLACE EXTENSION HOUSING OIL SEAL

(a) Remove the dust deflector.
(b) Using a screwdriver, pry out the oil seal.
(c) Using SST and a hammer, drive in a new oil seal.
SST 09950–60010 (09951–00570), 09950–70010 (09951–07150)

Drive in depth: 0 ± 0.5 mm (0 ± 0.020 in.)

(d) Coat the oil seal lip with MP grease.
(e) Install the deflector.

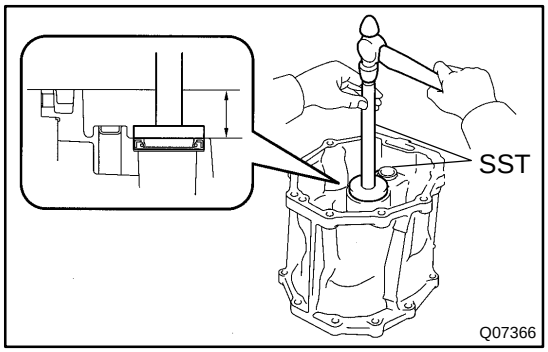

3. 4WD:
IF NECESSARY, REPLACE TRANSFER ADAPTOR OIL SEAL

(a) Using a screwdriver, pry out the oil seal.
(b) Using SST and a hammer, drive in a new oil seal.
SST 09950–60010 (09951–00570), 09950–70010 (09951–07150)
Drive in depth: 45.6 ± 0.5 mm (1.795 ± 0.020 in.)
(c) Coat the oil seal lip with MP grease.

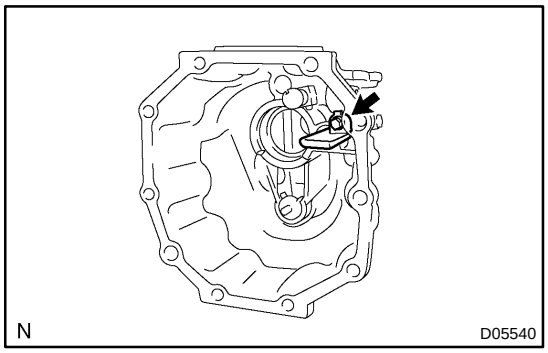

4. 2WD:
IF NECESSARY, REPLACE OIL RECEIVER PIPE

(a) Remove the bolt and oil receiver pipe.
(b) Install the oil receiver pipe with the bolt.
Torque: 11 N·m (115 kgf·cm, 8 ft·lbf)

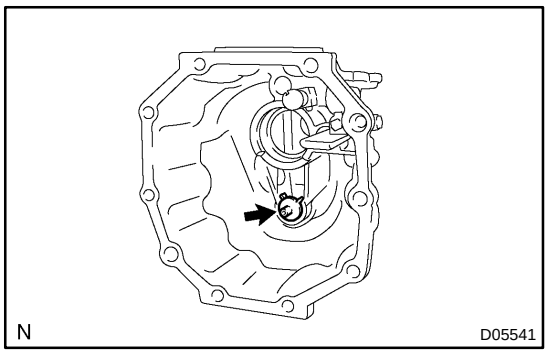

5. IF NECESSARY, REPLACE OIL RECEIVER

TROUBLESHOOTING

PR01F–02

PROBLEM SYMPTOMS TABLE

Use the table below to help you find the cause of the problem. The numbers indicate the priority of the likely cause of the problem. Check each part in order. If necessary, replace these parts.

2WD:

Symptom	Suspect Area	See page
Noise	3. Center support bearing (Worn)	PR–5
	4. Sleeve yoke spline (Worn)	–
	5. Spider bearing (Worn or stuck)	PR–5
Vibration	1. Transmission extension housing rear bushing (Runout)	–
	2. Sleeve yoke spline (Stuck)	–
	3. Propeller shaft (Runout)	PR–5
	4. Propeller shaft (Imbalance)	PR–5

4WD:

Symptom	Suspect Area	See page
Noise	1. Center support bearing (Worn)	PR–12
	2. Sleeve yoke spline (Worn)	–
	3. Spider bearing (Worn or stuck)	PR–12
Vibration	1. Transmission extension housing rear bushing (Runout)	–
	2. Sleeve yoke spline (Stuck)	–
	3. Propeller shaft (Runout)	PR–12
	4. Propeller shaft (Imbalance)	PR–12

PROPELLER SHAFT ASSEMBLY (2WD)

PR01G–02

COMPONENTS

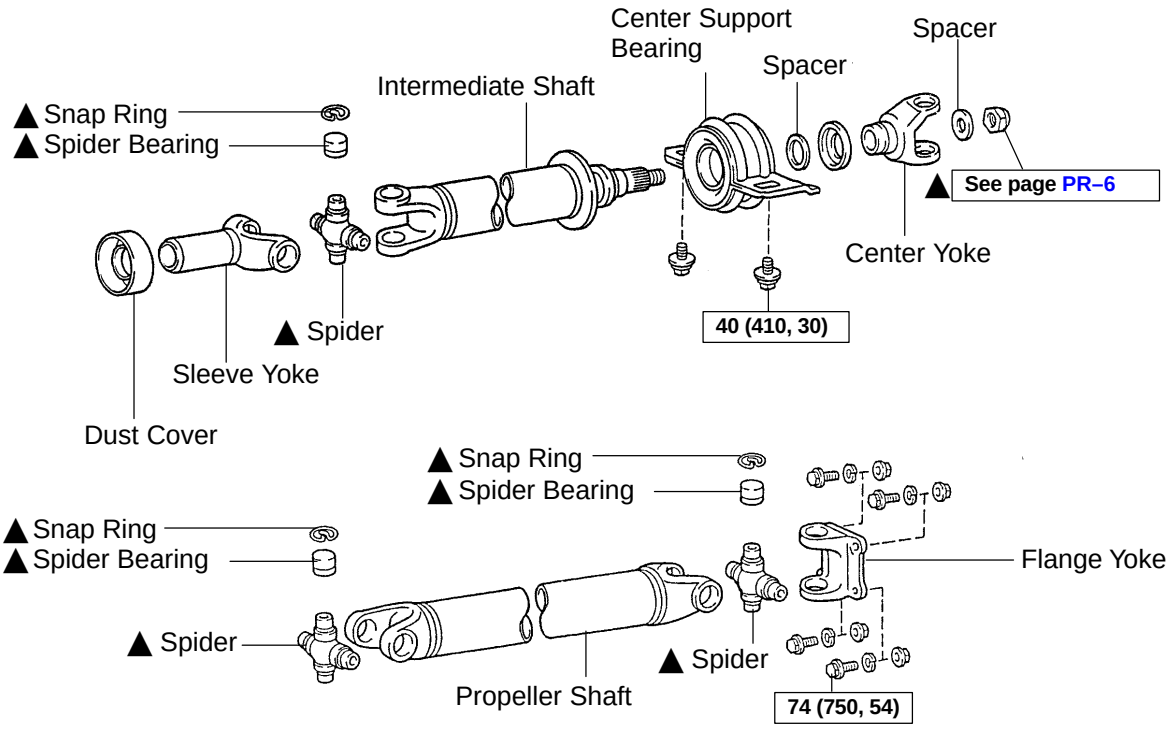

N·m (kgf·cm, ft·lbf) : Specified torque
▲ Non–reusable part

F07981

PR01H–02

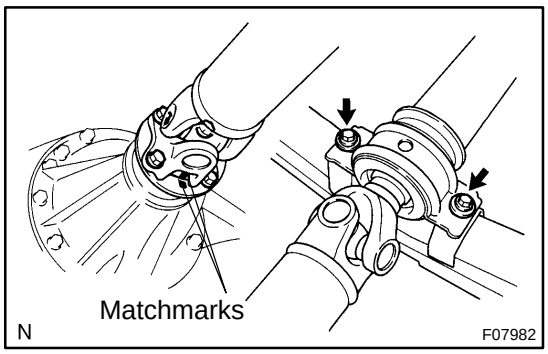

REMOVAL

REMOVE PROPELLER SHAFT

(a) Place matchmarks on the differential and propeller shaft flanges.

(b) Remove the 4 bolts, washers and nuts.

(c) Remove the 2 mounting bolts and center support bearing from the frame crossmember.

(d) Pull out the propeller shaft yoke from the transmission.

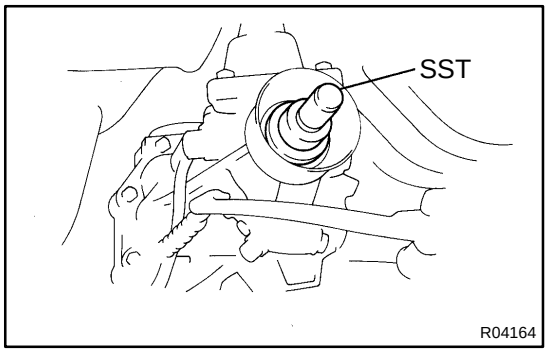

(e) Insert SST in the transmission to prevent oil leakage.
SST 09325–40010

PR05K–01

DISASSEMBLY

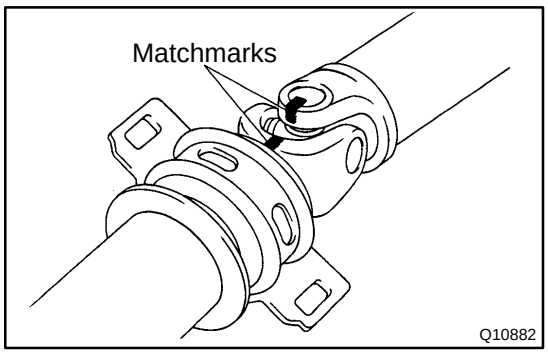

NOTICE:

Be careful not to grip the propeller shaft tube too tightly in a vise as this will cause deformation.

1. SEPARATE PROPELLER SHAFT AND INTERMEDIATE SHAFT

(a) Place matchmarks on the yoke and propeller shaft.

(b) Disassemble center yoke
(See SPIDER BEARING REPLACEMENT on page PR–17).

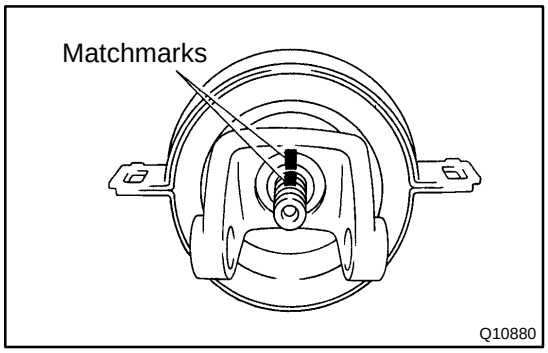

2. REMOVE CENTER SUPPORT BEARING FROM INTERMEDIATE SHAFT

(a) Using a hammer and chisel, loosen the staked part of the nut.

(b) Clamp the yoke in a vise and remove the spacer and nut.

(c) Place matchmarks on the yoke and shaft.

(d) Using a brass bar and hammer, remove the center yoke, spacer, center support bearing from the intermediate shaft.

PR01J–02

INSPECTION

NOTICE:

Be careful not to grip the propeller shaft tube too tightly in a vise as this will cause deformation.

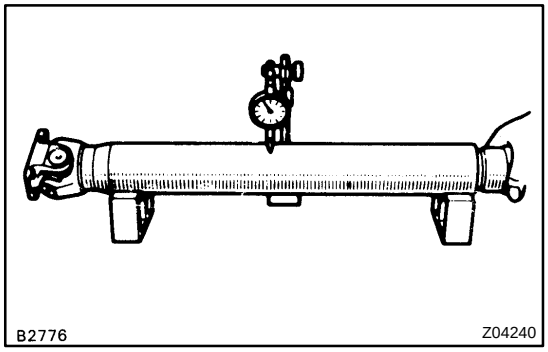

1. INSPECT PROPELLER SHAFT AND INTERMEDIATE SHAFT FOR DAMAGE OR RUNOUT

Using a dial indicator, check each runout of shaft.

Maximum runout: 0.8 mm (0.031 in.)

If shaft runout is greater than the maximum, replace the shaft.

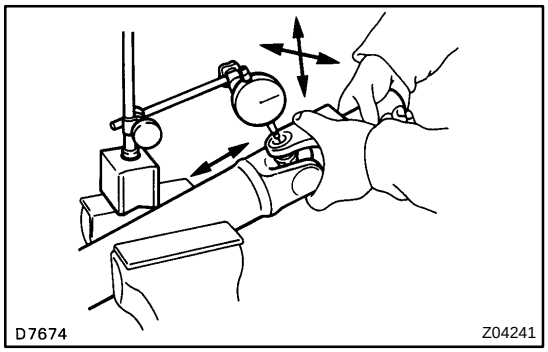

2. INSPECT SPIDER BEARING

(a) Inspect the spider bearing for wear or damage.

(b) Using a dial indicator, check the spider bearing axial play by turning the yoke of flange while holding the shaft tightly.

Maximum bearing axial play: 0.05 mm (0.0020 in.)

If the spider bearing axial play exceeds the maximum, replace the spider bearing (See page PR–17).

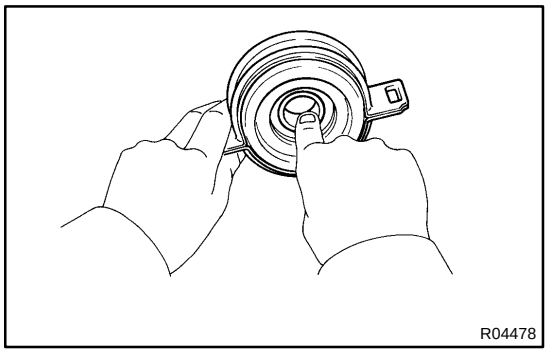

3. INSPECT CENTER SUPPORT BEARING FOR WEAR OR DAMAGE

Check that the bearing turns freely.

If the bearing is damaged, worn, or does not turn freely, replace it.

PR05L–01

REASSEMBLY

NOTICE:

Be careful not to grip the propeller shaft tube too tightly in a vise as this will cause deformation.

HINT:

When removing or installing any part, make sure that each joint is facing to the correct direction, as shown in the illustration below.

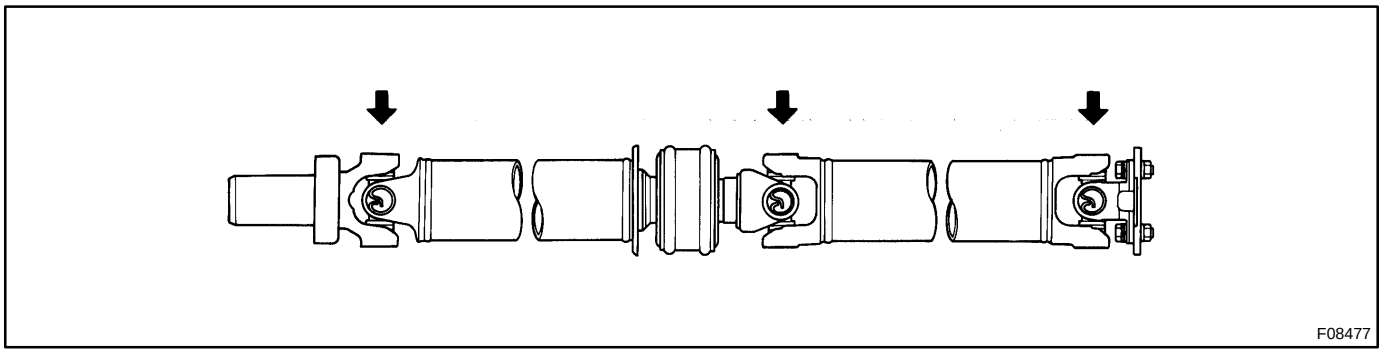

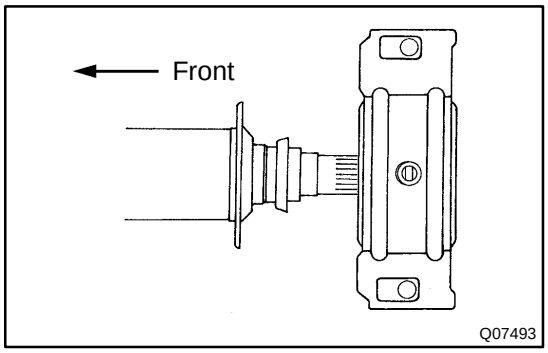

1. INSTALL CENTER SUPPORT BEARING ON INTERMEDIATE SHAFT

HINT:

Install the center support bearing in the direction, as shown.

2. INSTALL CENTER YOKE ON INTERMEDIATE SHAFT

(a) Coat the splines of the intermediate shaft with MP grease.

(b) Install the spacer.

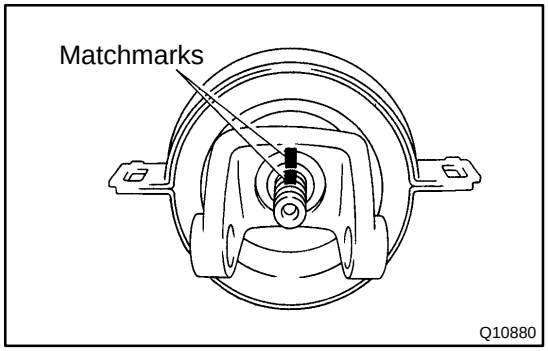

(c) Place the center yoke on the shaft and align the matchmarks.

HINT:

If replacing either the center yoke or intermediate shaft, reassemble them so that the front side yoke of the intermediate shaft and the center yoke are facing in the same direction.

(d) Install the spacer.

(e) Clamp the yoke in a vise, press the bearing into position by tightening down a new nut.

Torque: 181 N·m (1,845 kgf·cm, 133 ft·lbf)

(f) Loosen the nut.

(g) Torque the nut again.

Torque: 82 N·m (835 kgf·cm, 60 ft·lbf)

(h) Using a hammer and punch, stake the nut.

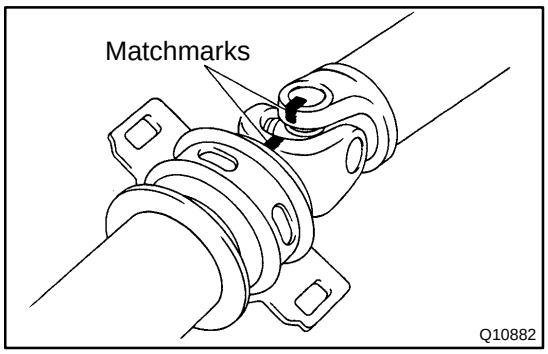

3. CONNECT PROPELLER SHAFT AND INTERMEDIATE SHAFT

Assemble center yoke (See SPIDER BEARING REPLACEMENT on page PR–17).

PR05M–01

INSTALLATION

1. INSTALL PROPELLER SHAFT

(a) Remove SST from the transmission.
SST 09325–40010

(b) Insert the yoke into the transmission.

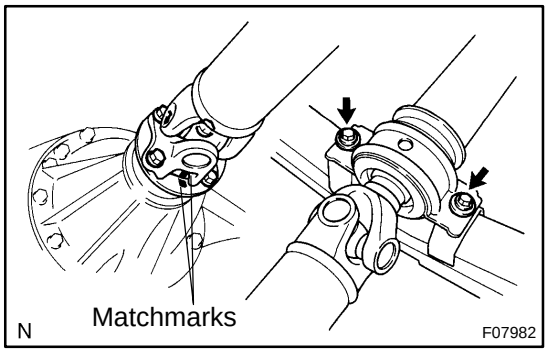

(c) Temporarily install the center support bearing with 2 mounting bolts.

HINT:
Make sure the bearing is installed with the drain hole facing downwards.

(d) Align the matchmarks on the flanges and connect the flanges with the 4 bolts, washers and nuts.

(e) Torque the 4 bolts.
Torque: 74 N·m (750 kgf·cm, 54 ft·lbf)

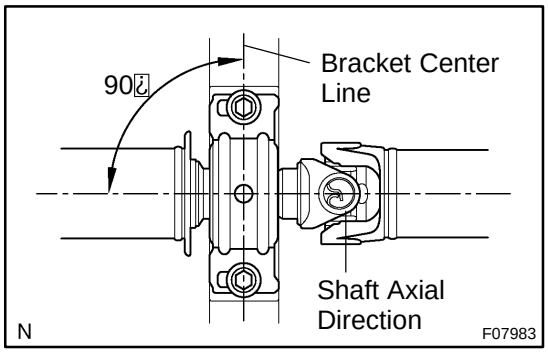

2. ADJUST CENTER SUPPORT BEARING

HINT:

▲ With the vehicle unladen, adjust the center support bearing to keep the intervals, as shown.

▲ In the same condition, check the center line in the axial direction. Adjust the bearing if necessary.

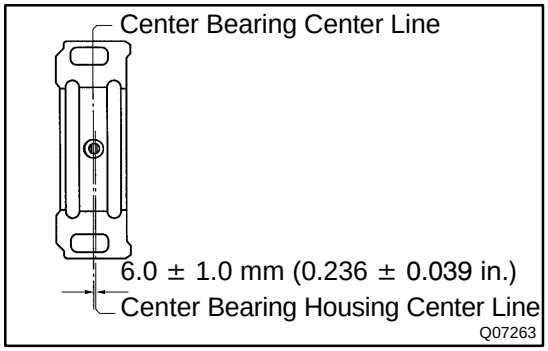

▲ Center bearing center line and center bearing housing center line must be adjusted to within 6.0 ± 1.0 mm (0.236 – 0.039 in.) of each other in the vehicle's longitudinal direction when the vehicle is unloaded.

Torque the 2 bolts.
Torque: 40 N·m (410 kgf·cm, 30 ft·lbf)

PROPELLER SHAFT ASSEMBLY (4WD)

COMPONENTS

PR01M–02

Front propeller shaft:

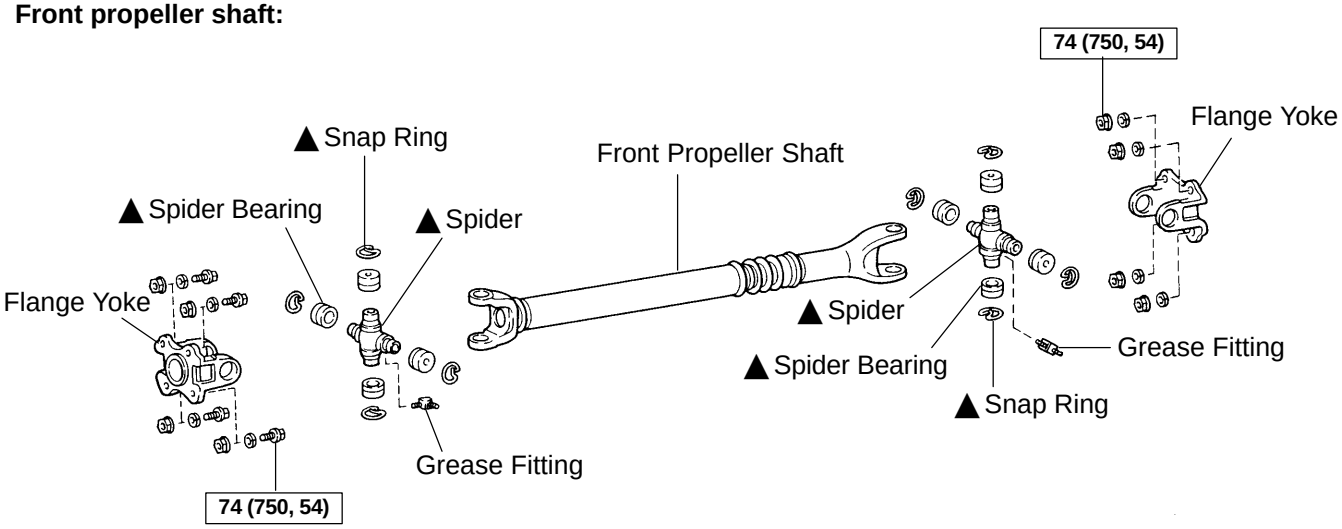

Rear propeller shaft:

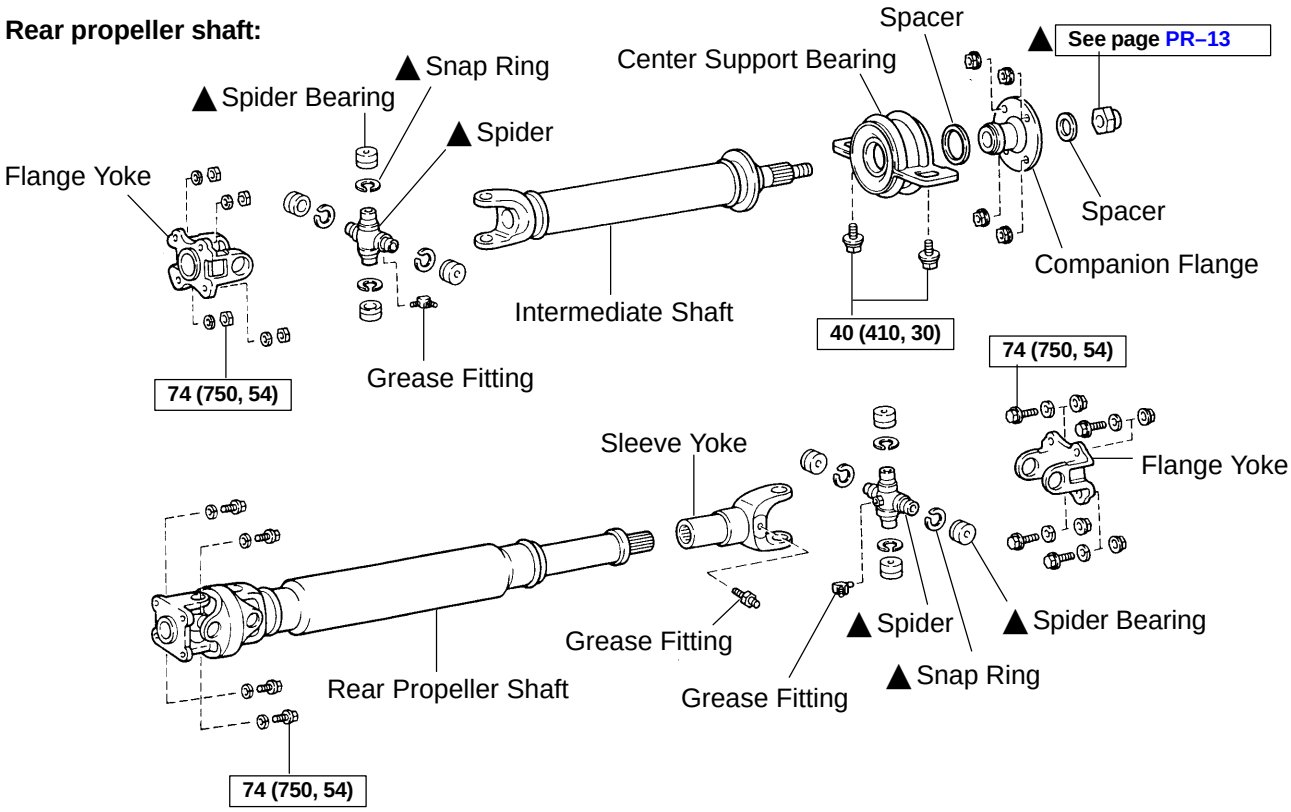

N·m (kgf·cm, ft·lbf) : Specified torque

▲ Non–reusable part

N

F07985

PR05N–03

REMOVAL

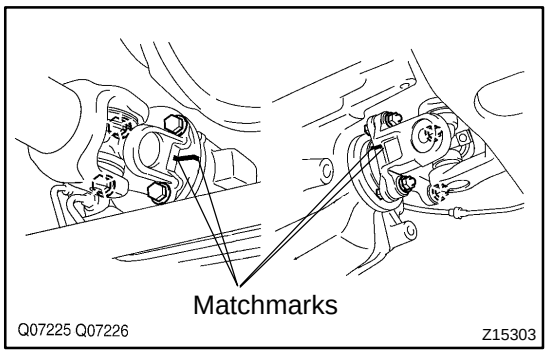

1. REMOVE FRONT PROPELLER SHAFT

(a) Place matchmarks on the differential and propeller shaft flange.
(b) Remove the 4 bolts, washers and nuts, disconnect the propeller shaft from the differential.
(c) Suspend the front side of the propeller shaft.
(d) Place matchmarks on the transfer and propeller shaft flanges.
(e) Remove the 4 nuts and washers.
(f) Remove the propeller shaft from the transfer.

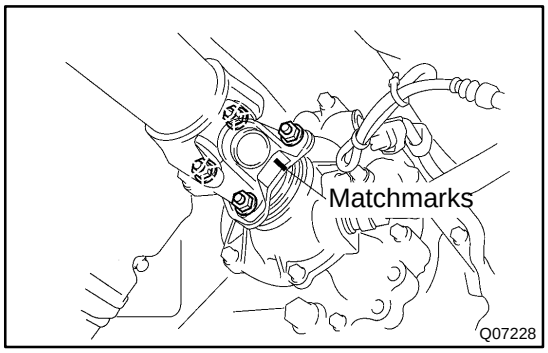

2. REMOVE REAR PROPELLER SHAFT

(a) Place matchmarks on the transfer and propeller shaft flanges.
(b) Remove the 4 nuts and washers, and disconnect the propeller shaft from the transfer.
(c) Suspend the front side of the propeller shaft.

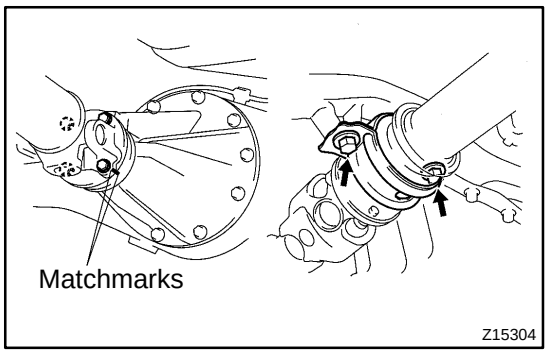

(d) Remove the 2 mounting bolts and center support bearing.
(e) Place matchmarks on the differential and propeller shaft flanges.
(f) Remove the 4 bolts, washers and nuts.
(g) Remove the propeller shaft from the differential.

PR05O–02

DISASSEMBLY

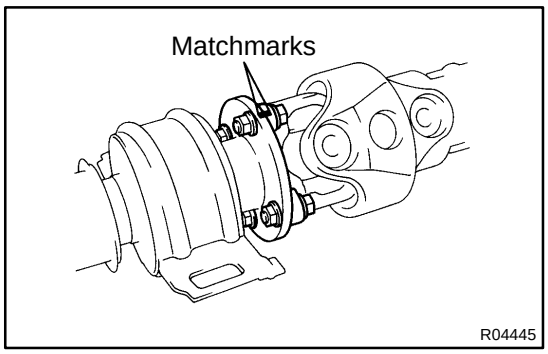

NOTICE:

Be careful not to grip the propeller shaft tube too tightly in a vise as this will cause deformation.

1. Rear propeller shaft:
SEPARATE PROPELLER SHAFT AND INTERMEDIATE SHAFT

(a) Place the matchmarks on the flanges.

(b) Remove the 4 nuts, bolts and washers.

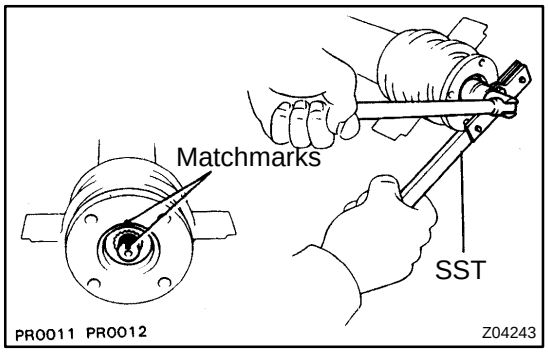

2. Rear propeller shaft:
REMOVE CENTER SUPPORT BEARING FROM INTERMEDIATE SHAFT

(a) Using a hammer and chisel, loosen the staked part of the nut.

(b) Using SST to hold the flange, remove the nut and spacer.
SST 09330–00021

(c) Place matchmarks on the flange and shaft.

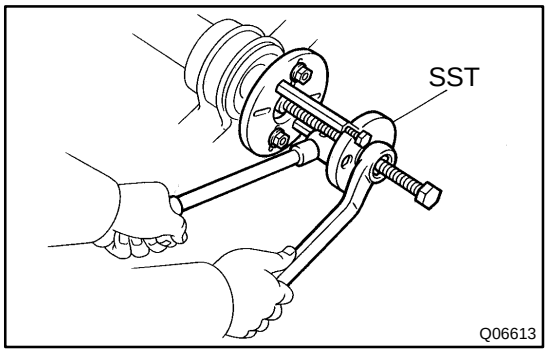

(d) Using SST, remove the flange from the intermediate shaft.
SST 09950–30012 (09951–03010, 09953–03010, 09954–03010, 09955–03030, 09956–03020)

(e) Remove the spacer and center support bearing from the intermediate shaft.

PR01P–02

INSPECTION

NOTICE:

Be careful not to grip the propeller shaft tube too tightly in a vise as this will cause deformation.

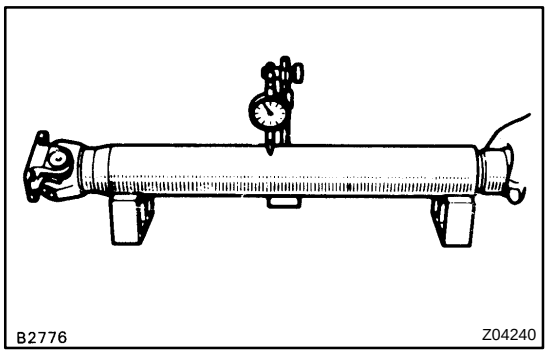

1. INSPECT PROPELLER SHAFT AND INTERMEDIATE SHAFT FOR DAMAGE OR RUNOUT

Using a dial indicator, check the runout of shafts.

Maximum runout: 0.8 mm (0.031 in.)

If shaft runout is greater than the maximum, replace the shaft.

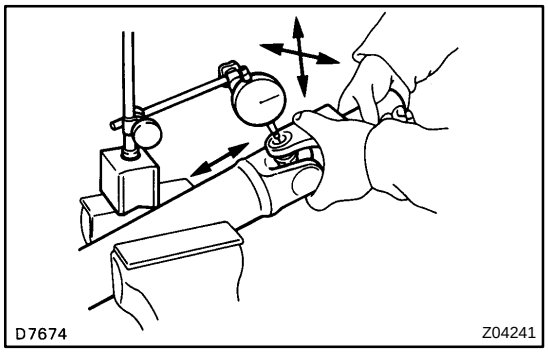

2. INSPECT SPIDER BEARING

(a) Inspect the spider bearing for wear or damage.

(b) Using a dial indicator, check the spider bearing axial play by turning the yoke of flange while holding the shaft tightly.

Maximum bearing axial play:

Front propeller shaft: 0.05 mm (0.0020 in.)

Rear propeller shaft: 0 mm (0 in.)

If the spider bearing axial play exceeds the maximum, replace the spider bearing (See page PR–17).

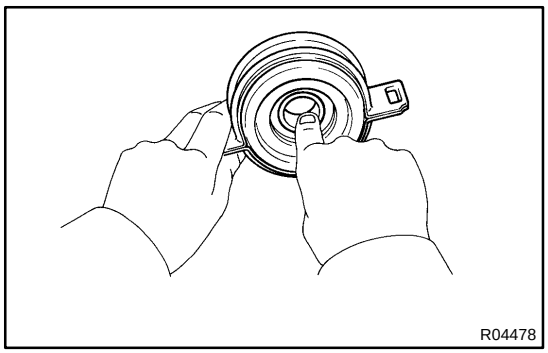

3. Rear propeller shaft:
INSPECT CENTER SUPPORT BEARING FOR WEAR OR DAMAGE

Check that the bearing turns freely.

If the bearing is damaged, worn, or does not turn freely, replace it.

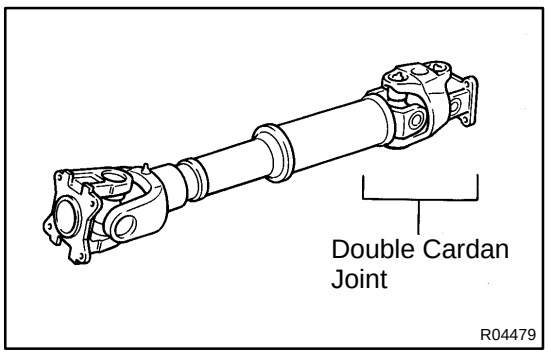

4. Rear propeller shaft:
INSPECT WITH DOUBLE CARDAN JOINT PROPELLER SHAFT

(a) Inspect the shaft for wear or damage.

(b) Inspect the double cardan joint for wear or damage.

If any problem is found, replace the propeller shaft assembly.

HINT:

Double cardan joint is used on rear propeller shaft.

PR01Q–02

REASSEMBLY

NOTICE:

Be careful not to grip the propeller shaft tube too tightly in a vise as this will cause deformation.

HINT:

When removing or installing any part, make sure that each joint is facing to the correct direction, as shown in the illustration below.

Front propeller shaft:

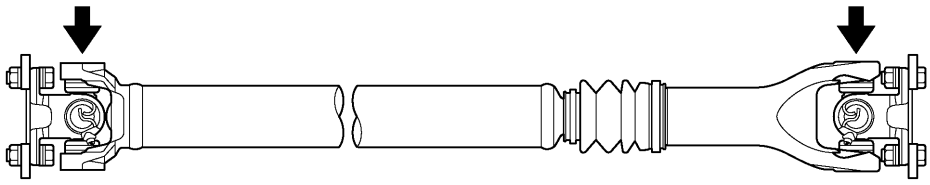

Rear propeller shaft:

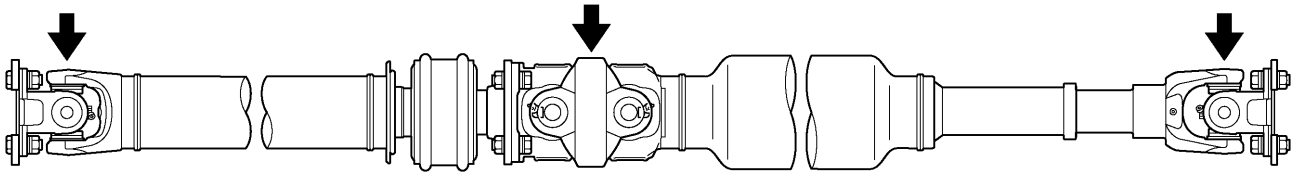

N

F07984

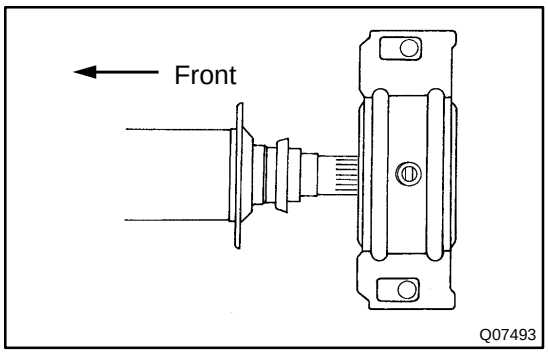

Q07493

1. Rear propeller shaft:
INSTALL CENTER SUPPORT BEARING ON INTERMEDIATE SHAFT

HINT:

Install the center support bearing in the direction, as shown.

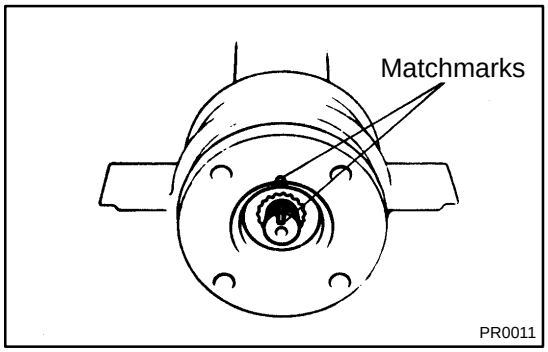

PR0011

2. Rear propeller shaft:
INSTALL FLANGE ON INTERMEDIATE SHAFT

(a) Coat the splines of the intermediate shaft with MP grease.

(b) Install the spacer.

(c) Place the flange on the shaft and align the matchmarks.

HINT:

If replacing either the center flange or intermediate shaft, reassemble it so that the front side flange yoke of the intermediate shaft and the rear side flange yoke of the propeller shaft are facing in the same direction.

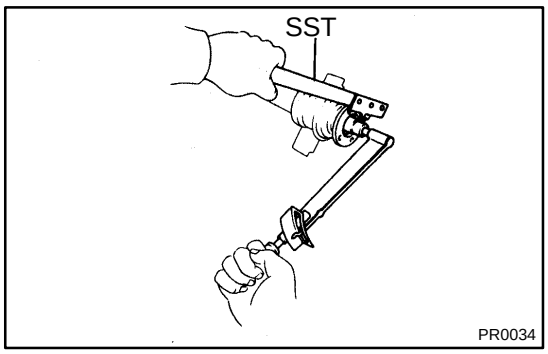

(d) Install the spacer.

(e) Using SST to hold the flange, press the bearing into position by tightening down a new nut.
SST 09330–00021
Torque: 181 N·m (1,845 kgf·cm, 133 ft·lbf)

(f) Loosen the nut.

(g) Torque the nut again.
Torque: 82 N·m (835 kgf·cm, 60 ft·lbf)

(h) Using a hammer and punch, stake the nut.

3. Rear propeller shaft:
INSTALL PROPELLER SHAFT

(a) Align the matchmarks on the flanges and connect the flanges with 4 bolts, washers and nuts.

HINT:
If replacing either the center flange or intermediate shaft, reassembly it so that the front side flange yoke of the intermediate shaft and the rear side flange yoke of the propeller shaft are facing in the same direction.

(b) Torque the bolts.
Torque: 74 N·m (750 kgf·cm, 54 ft·lbf)

PR05P–01

INSTALLATION

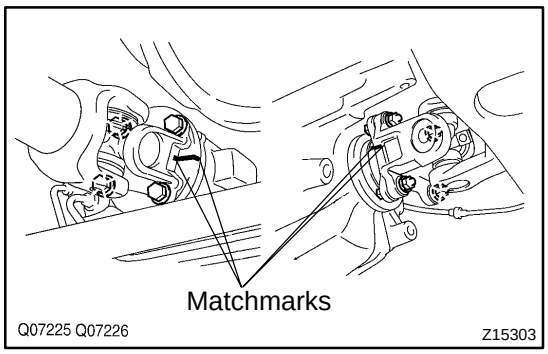

1. INSTALL FRONT PROPELLER SHAFT

(a) Align the matchmarks on the propeller shaft and differential flanges, and connect the flanges with the 4 bolts, nuts and washers.

(b) Torque the 4 bolts.
Torque: 74 N·m (750 kgf·cm,54 ft·lbf)

(c) Align the matchmarks on the propeller shaft and transfer flanges, and connect the flanges with the 4 nuts and washers.

(d) Torque the 4 nuts.
Torque: 74 N·m (750 kgf·cm, 54 ft·lbf)

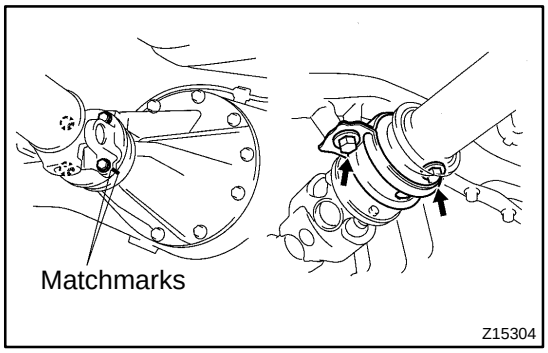

2. INSTALL REAR PROPELLER SHAFT

(a) Align the matchmarks on the propeller shaft and differential flanges, and connect the flanges with the 4 bolts, washers and nuts.

(b) Torque the 4 bolts.
Torque: 74 N·m (750 kgf·cm, 54 ft·lbf)

(c) Temporarily install the center support bearing with 2 mount bolts.

HINT:
Make sure the bearing is installed with the drain hole facing downwards.

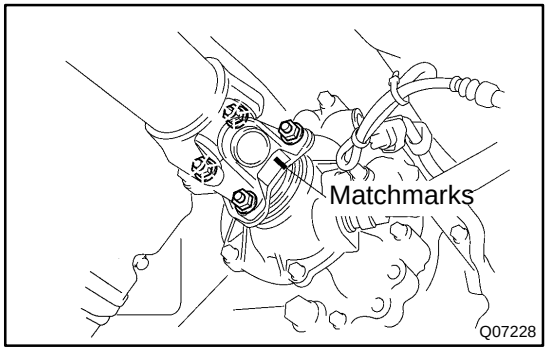

(d) Align the matchmarks on the propeller shaft and transfer flanges, and connect the flanges with the 4 nuts and washers.

(e) Torque the 4 nuts.
Torque: 74 N·m (750 kgf·cm, 54 ft·lbf)

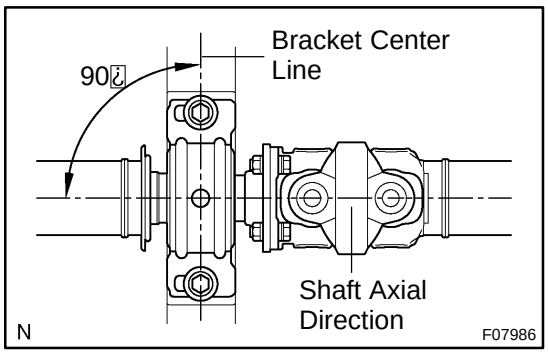

3. ADJUST CENTER SUPPORT BEARING

HINT:

- With the vehicle unladen, adjust the center support bearing to keep the intervals, as shown.
- In the same condition, check the center line in the axial direction. Adjust the bearing if necessary.

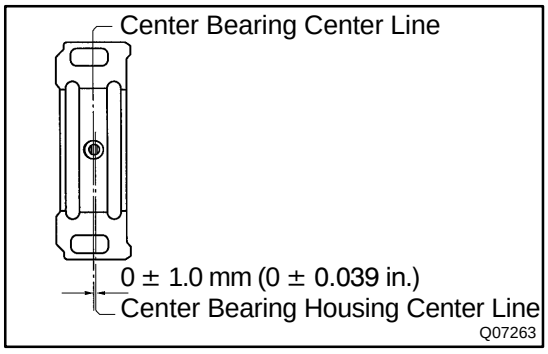

- Center bearing center line and center bearing housing center line must be adjusted to within 0 ±1.0 mm of each other in the vehicle's longitudinal direction when the vehicle is unloaded.

Torque the 2 bolts.

Torque: 40 N·m (410 kgf·cm, 30 ft·lbf)

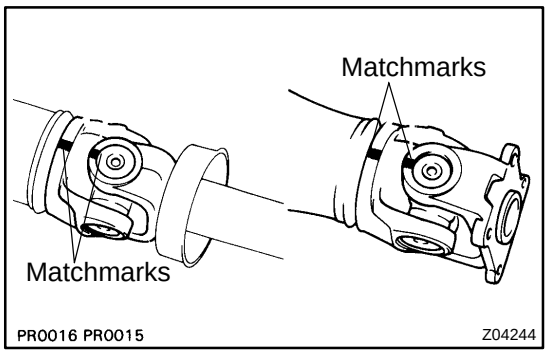

SPIDER BEARING

PR01S–02

REPLACEMENT

1. PLACE MATCHMARKS ON SHAFT AND YOKE

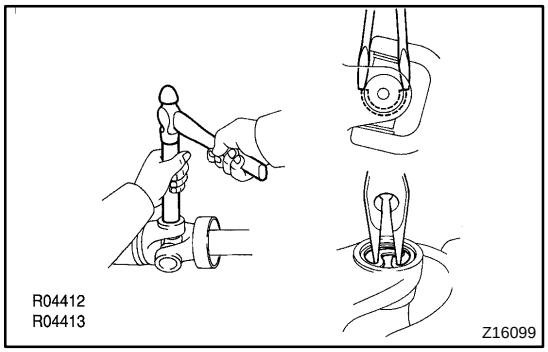

2. REMOVE SNAP RING

(a) Using a brass bar and hammer, slightly tap in the bearing outer race.

(b) 4WD rear propeller shaft:
Using 2 screwdrivers, remove the 4 snap rings from the grooves.

(c) 2WD and 4WD front propeller shaft:
Using needle nose pliers, remove the 4 snap rings from the grooves.

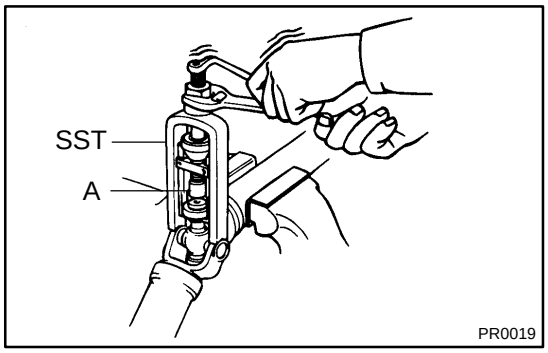

3. REMOVE SPIDER BEARING

(a) Using SST, push out the bearing from the flange yoke.
SST 09332–25010

HINT:
Sufficiently raise the part indicated by ”A” so that it does not come into contact with the bearing.

(b) Clamp the bearing outer race in a vise and tap off the flange with a hammer.

HINT:
Remove the bearing on the opposite side in the same procedure.

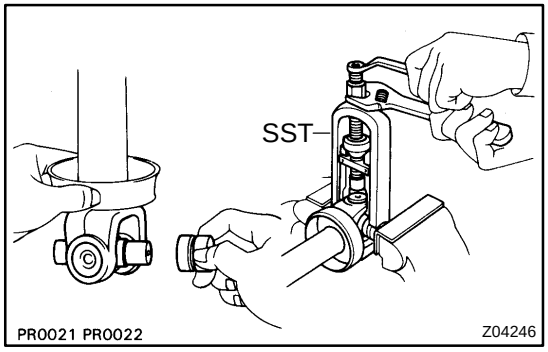

(c) Install the 2 removed bearing outer races to the spider, and clamp them in a vise.

(d) Using SST, push out the bearing from the sleeve yoke.
SST 09332–25010

(e) Clamp the outer bearing race in a vise and tap off the yoke with a hammer.

HINT:
Remove the bearing on the opposite side in the same procedure.

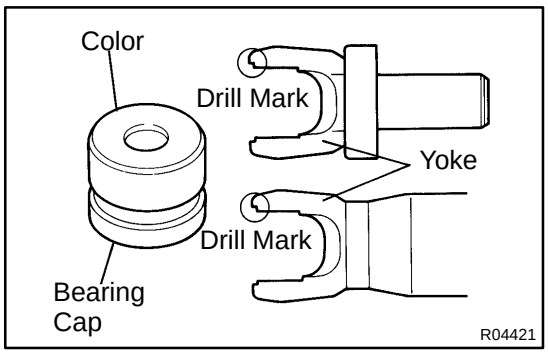

4. SELECT SPIDER BEARING

Select the appropriate bearing according to the existence of drill mark on the yoke.

Yoke	Bearing
With drill mark	With color mark (Red)
No drill mark	No color mark

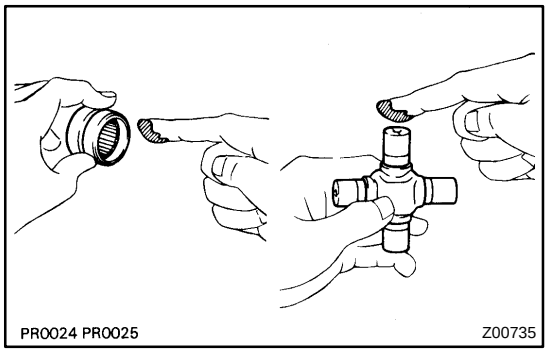

5. INSTALL SPIDER BEARING

(a) Apply MP grease to a new spider and bearings.

HINT:

Be careful not to apply too much grease.

(b) Align the matchmarks on the yoke and shaft.

(c) Fit the spider into the yoke.

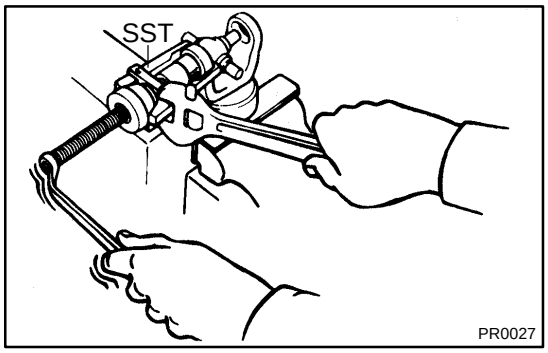

(d) Using SST, install the bearing on the spider.
SST 09332–25010

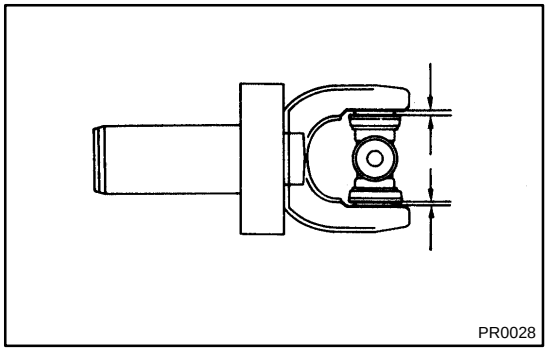

(e) Using SST, adjust both bearings so that the snap ring grooves are at maximum and equal in width.

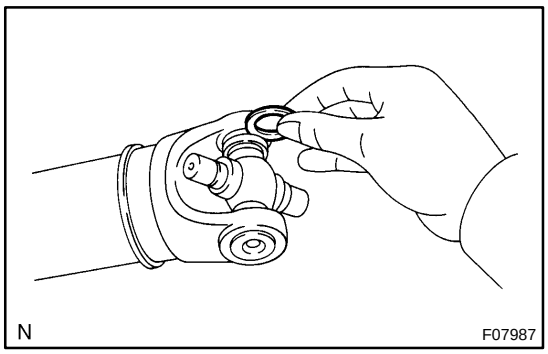

6. INSTALL SNAP RINGS

(a) Install 2 new snap rings of equal thickness which will allow 0 – 0.05 mm (0 – 0.0020 in.) axial play.

HINT:

Do not reuse the snap rings.

4WD rear propeller shaft:

Color	Mark	Thickness mm (in.)
–	□	2.44 – 2.46 (0.0961 – 0.0969)
–	10	2.46 – 2.48 (0.0969 – 0.0976)
–	1	2.28 – 2.30 (0.0898 – 0.0906)
–	2	2.30 – 2.32 (0.0906 – 0.0913)
–	None	2.32 – 2.34 (0.0913 – 0.0921)
Brown	–	2.34 – 2.36 (0.0921 – 0.0929)
Blue	–	2.36 – 2.38 (0.0929 – 0.0937)
–	6	2.38 – 2.40 (0.0937 – 0.0945)
–	7	2.40 – 2.42 (0.0945 – 0.0953)
–	8	2.42 – 2.44 (0.0953 – 0.0961)
–	D	2.18 – 2.20 (0.0858 – 0.0866)
–	E	2.20 – 2.22 (0.0866 – 0.0874)
–	F	2.22 – 2.24 (0.0874 – 0.0882)
–	G	2.24 – 2.26 (0.0882 – 0.0890)
–	H	2.26 – 2.28 (0.0890 – 0.0898)
–	A	2.48 – 2.50 (0.0976 – 0.0984)
–	B	2.50 – 2.52 (0.0984 – 0.0992)
–	C	2.52 – 2.54 (0.0992 – 0.1000)

F14546

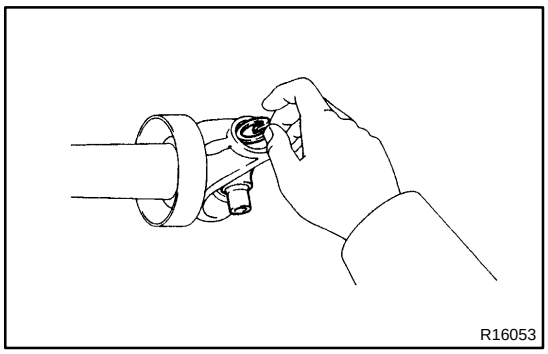

2WD and 4WD front propeller shaft:

Color	Thickness mm (in.)
Blue	1.638 (0.0645)
Yellow	1.588 (0.0625)
Silver	1.537 (0.0605)
Copper	1.511 (0.0595)
Black	1.486 (0.0585)
Red	1.435 (0.0565)
Green	1.384 (0.0545)

(b) Using a hammer, tap the yoke until there is no clearance between the bearing outer race and snap ring.

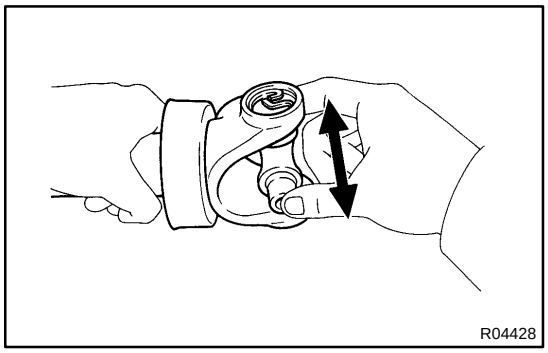

7. CHECK SPIDER BEARING

(a) Check that the spider bearing moves smoothly.

(b) Check the spider bearing axial play.

Maximum bearing axial play:
4WD rear propeller shaft: 0 mm (0 in.)
2WD and 4WD front propeller shaft:
0.05 mm (0.0020 in.)

HINT:

▲ Install new spider bearings on the flange side in the procedure described above.

▲ When replacing the rear propeller shaft spider on 4WD vehicle, be sure that the grease fitting assembly hole is facing in the direction shown in the illustration below.

SPIDER GREASE FITTING ASSEMBLY DIRECTION FOR 4WD FRONT PROPELLER SHAFT

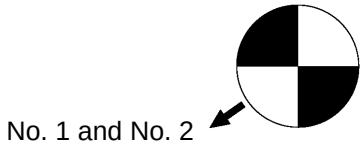

The figure at left shows the locations of the grease fittings as seen from the rear.

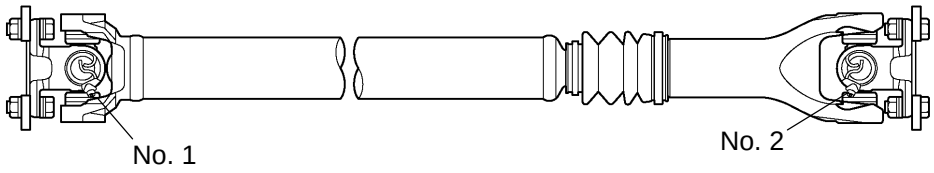

SPIDER GREASE FITTING ASSEMBLY DIRECTION FOR 4WD REAR PROPELLER SHAFT

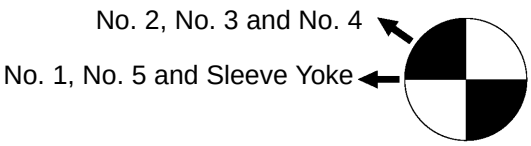

The figure at left shows the locations of the grease fittings as seen from the rear.

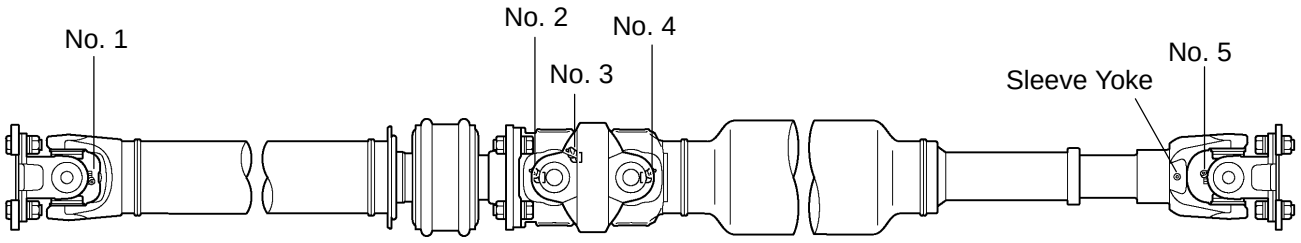

N

F08552

SFI SYSTEM

SF1U4–01

PRECAUTION

HINT:

Any DTC retained by the computer will be erased when the negative (–) terminal cable is removed from the battery. Therefore, if necessary, read the diagnosis before removing the negative (–) terminal cable from the battery.

1. BEFORE WORKING ON FUEL SYSTEM, DISCONNECT NEGATIVE (–) TERMINAL CABLE FROM BATTERY

2. DO NOT SMOKE OR WORK NEAR AN OPEN FLAME WHEN WORKING ON THE FUEL SYSTEM

3. KEEP GASOLINE AWAY FROM RUBBER OR LEATHER PARTS

4. MAINTENANCE PRECAUTIONS

(a) In the event of engine misfire, these precautions should be taken.
  (1) Check proper connection to battery terminals, etc.
  (2) After repair work, check that the ignition coil terminals and all other ignition system lines are reconnected securely.
  (3) When cleaning the engine compartment, be especially careful to protect the electrical system from water.

(b) Precautions when handling the oxygen sensor.
  (1) Do not allow oxygen sensor to drop or hit against an object.
  (2) Do not allow the sensor to come into contact with water.

5. IF VEHICLE IS EQUIPPED WITH MOBILE RADIO SYSTEM (HAM, CB, ETC.)

If the vehicle is equipped with a mobile communication system, refer to the precaution in the IN section.

6. AIR INDUCTION SYSTEM

(a) Separation of the engine oil dipstick, oil filler cap, PCV hose, etc. may cause the engine to run out of tune.

(b) Disconnection, looseness or cracks in the parts of the air induction system between the throttle body and cylinder head will allow air suction and cause the engine to run out of tune.

7. ELECTRONIC CONTROL SYSTEM

(a) Before removing SFI wiring connectors, terminals, etc., first disconnect the power by either turning the ignition switch OFF or disconnecting the negative (–) terminal cable from the battery.

HINT:

Always check the diagnostic trouble code before disconnecting the negative (–) terminal cable from the battery.

(b) When installing the battery, be especially careful not to incorrectly connect the positive (+) and negative (–) cables.
(c) Do not permit parts to receive a severe impact during removal or installation. Handle all SFI parts carefully, especially the ECM.
(d) Be careful during troubleshooting as there are numerous transistor circuits, and even slight terminal contact can cause further troubles.
(e) Do not open the ECM cover.
(f) When inspecting in rainy weather, take care to prevent an intrusion of water. Also, when washing the engine compartment, prevent water from getting on the SFI parts and wiring connectors.
(g) Parts should be replaced as an assembly.
(h) Care should be taken when pulling out and inserting wiring connectors.
  (1) Release the lock and pull out the connector, pulling on the connectors.
  (2) Fully insert the connector and check that it is locked.

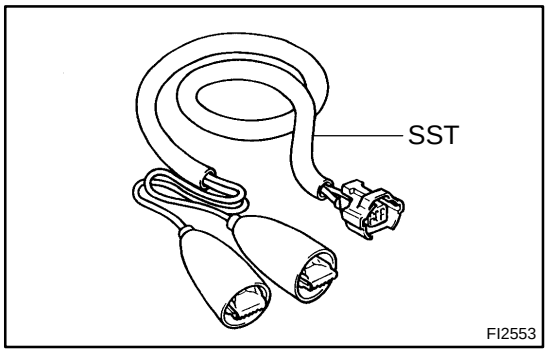

(i) Use SST for inspection or test of the injector or its wiring connector.
SST 09842–30070

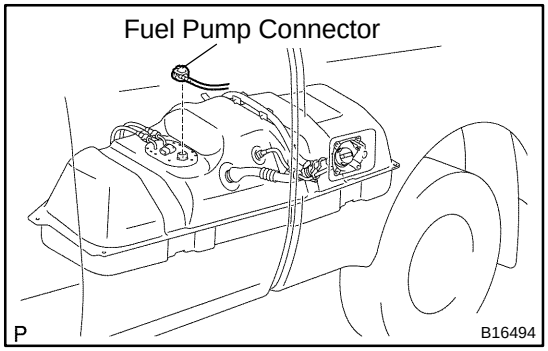

8. FUEL SYSTEM

(a) When disconnecting the high fuel pressure line, a large amount of gasoline will spill out, so observe these procedures:
  (1) Disconnect the fuel pump connector.
  (2) Start the engine. After the engine has stopped on its own, turn the ignition switch OFF.

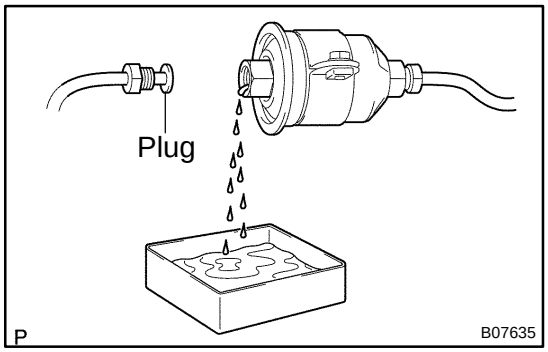

  (3) Put a container under the connection.
  (4) Slowly loosen the connection.
  (5) Disconnect the connection.
  (6) Plug the connection with a rubber plug.
  (7) Reconnect the fuel pump connector.

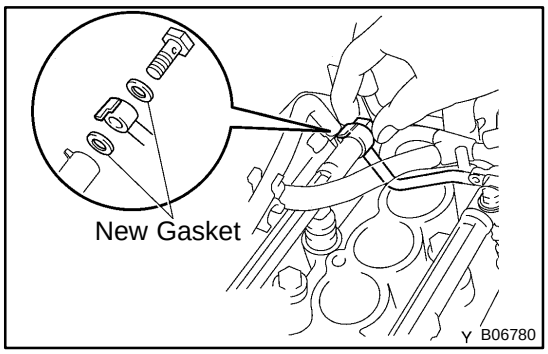

(b) When connecting the union bolt on the high pressure pipe union, observe these procedures:
(1) Always use 2 new gaskets.
(2) Tighten the union bolt by hand.
(3) Tighten the union bolt to the specified torque.
Torque: 34.3 N·m (350 kgf·cm, 25 ft·lbf)

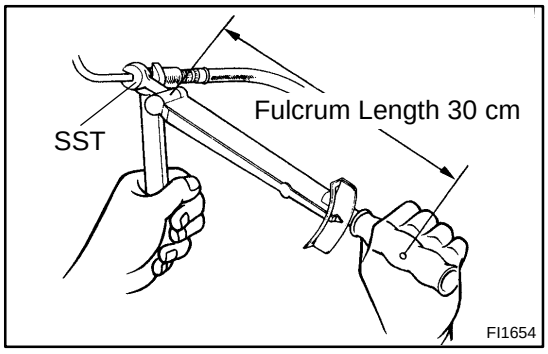

(c) When connecting the flare nut on the high pressure pipe union, observe these procedures:
(1) Apply a light coat of engine oil to the flare nut, and tighten the flare nut by hand.
(2) Using SST, tighten the flare nut to the specified torque.
SST 09023–38400
Torque:
28 N·m (285 kgf·cm, 21 ft·lbf) for use with SST
34.3 N·m (350 kgf·cm, 25 ft·lbf)

NOTICE:
Do not rotate the fuel filter outlet, when tightening the flare nut.

HINT:
Use a torque wrench with a fulcrum length of 30 cm (11.81 in.).

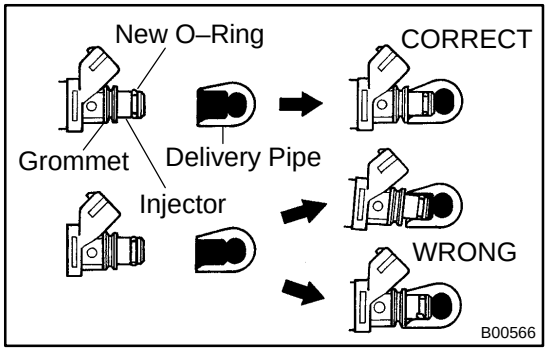

(d) Observe these precautions when removing and installing the injectors.
(1) Never reuse the O–ring.
(2) When placing a new O–ring on the injector, take care not to damage it in any way.
(3) Coat a new O–ring with spindle oil or gasoline before installing–never use engine, gear or brake oil.

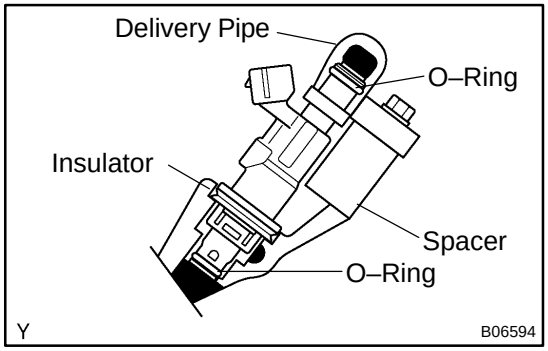

(e) Install the injector to the delivery pipe and lower intake manifold as shown in the illustration.
Before installing the injector, must apply spindle oil or gasoline on the place where a delivery pipe or an intake manifold touches an O–ring of the injector.

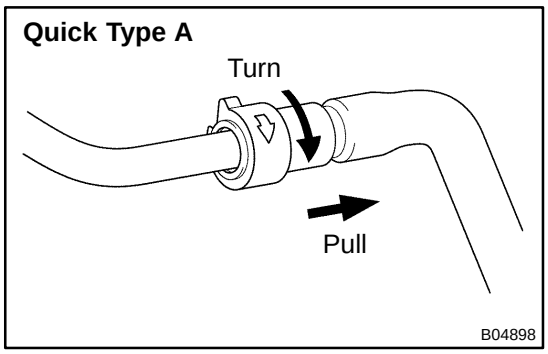

(f) Quick Type A:

Observe these precautions when disconnecting the fuel tube connector:

(1) Check that there is any dirt or the like on the pipe and around the connector before disconnecting them and clean the dirt away.

(2) Be sure to disconnect by hands.

(3) When the connector and the pipe are stuck, turn and pull the connector to free to disconnect and pull it out. Do not use any tools at this time.

(4) Inspect if there is any dirt or the like on the seal surface of the disconnected pipe and clean it away.

(5) Prevent the disconnected pipe and connector from being damaged or mixed with foreign objects by covering them with a vinyl bag.

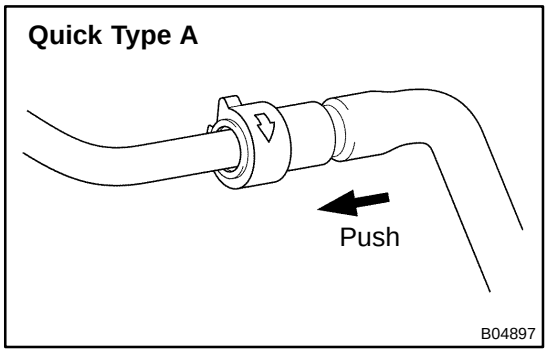

(g) Quick Type A:

Observe these precautions when connecting the fuel tube connector:

(1) Do not reuse the retainer removed from the pipe.

(2) Must use hands to remove the retainer from the pipe.

(3) Check that there is any damage or foreign objects on the connected part of the pipe.

(4) Match the axis of the connector with axis of the pipe, and push in the connector until the connector makes a ”click” sound. In case that the connections is tight, apply small amount of fresh engine oil on the tip of the pipe.

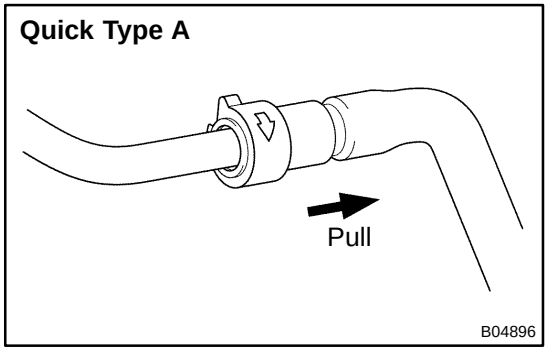

(5) After having finished the connection, check if the pipe and the connector are securely connected by pulling them.

(6) Check if there is any fuel leakage.

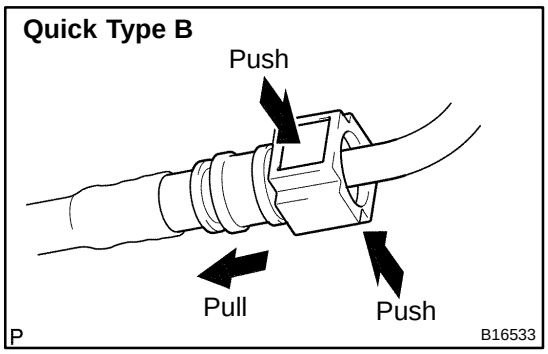

(h) Quick Type B:
Observe these precautions when disconnecting the fuel tube connector:
(1) Check that there is any dirt like mud in the pipe and around the connector before disconnecting them and clean the dirt away.
(2) Be sure to disconnect them with hands.
(3) When the connector and the pipe are stuck, push and pull the connector to free them. And then disconnect and pull it out. Do not use any tools at this time.
(4) Inspect if there is any dirt or the likes on the seal surface of the disconnected pipe and clean it away.
(5) Prevent the disconnected pipe and connector from being damaged and foreign objects mixing in by covering them with a vinyl bag.

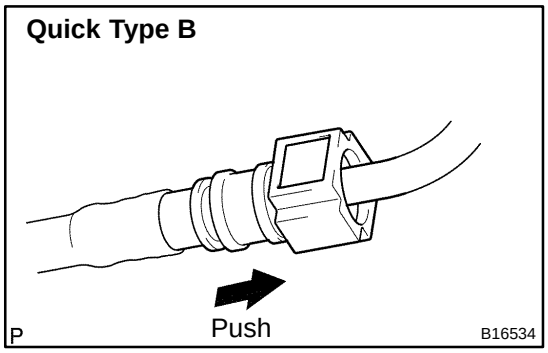

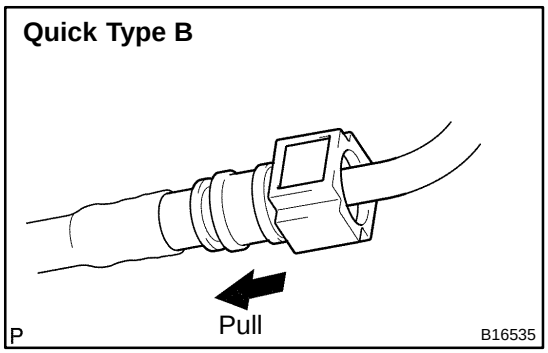

(i) Quick Type B:
Observe these precautions when connecting the fuel tube connector:
(1) Check that there is any damage or foreign objects in the connected part of the pipe.
(2) Match the axis of the connector with the axis of the pipe, and push into the connector until the connector makes a ”click” sound. In case that the connection is tight, apply little amount of fresh engine oil on the tip of the pipe.
(3) After having finished the connection, check if the pipe and the connector are securely connected by pulling them.
(4) Check that there is any fuel leak.

(j) Observe these precautions when handling nylon tube.
(1) Pay attention not to turn the connected part of the nylon tube and the quick connector by force when connecting them.
(2) Pay attention not to kink the nylon tube.
(3) Do not remove the EPDM protector from the outside of the nylon tube.
(4) Must not close the piping with the nylon tube by bending it.

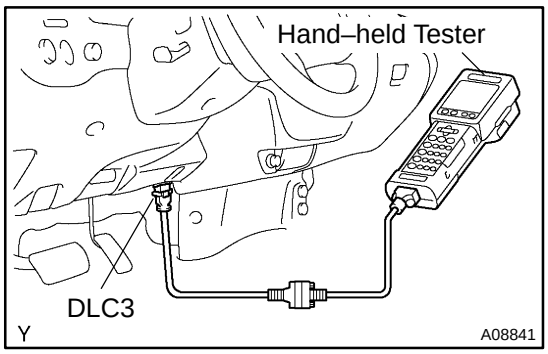

(k) Check that there is any fuel leak after maintenance anywhere on the fuel system.
(1) Connect a hand–held tester to the DLC3.
(2) Turn the ignition switch ON, and push the hand–held tester main switch ON.

NOTICE:
Do not start the engine.

(3) Select the ACTIVE TEST mode on the hand–held tester.
(4) Please refer to the hand–held tester operator's manual for further details.

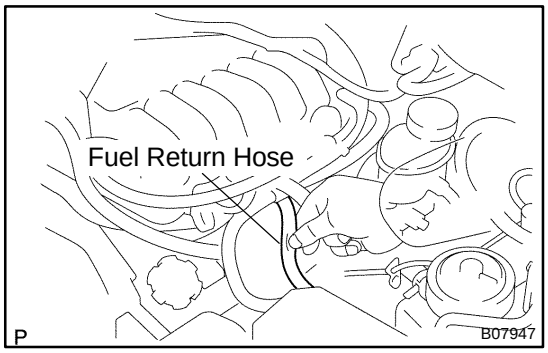

(5) Pinch the fuel return hose.
The pressure in the high pressure line will rise to approx. 392 kPa (4 kgf/cm^2, 57 psi). In this state, check to see that there are no leaks from any part of the fuel system.

NOTICE:
Always pinch the hose. Avoid bending as it may cause the hose to crack.

(6) Turn the ignition switch OFF.
(7) Disconnect the hand–held tester from the DLC3.

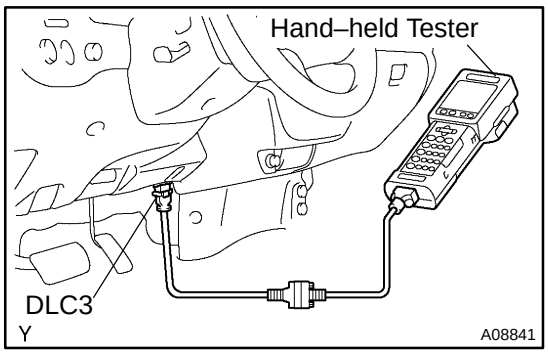

FUEL PUMP

SF13C–02

ON–VEHICLE INSPECTION

1. CHECK FUEL PUMP OPERATION

(a) Connect a hand–held tester to the DLC3.

(b) Turn the ignition switch ON, and push the hand–held tester main switch ON.

NOTICE:

Do not start the engine.

(c) Select the active test mode on the hand–held tester.

(d) Please refer to the hand–held tester operator's manual for further details.

(e) If you have no hand–held tester, connect the positive (+) and negative (–) leads from the battery to the fuel pump connector.

(f) Turn the ignition switch OFF.

(g) Disconnect the hand–held tester from the DLC3.

2. CHECK FUEL PRESSURE

(a) Check the battery positive voltage is above 12 V.

(b) Disconnect the negative (–) terminal cable from the battery.

(c) Remove the 6 bolts, and disconnect the No. 2 timing belt cover.

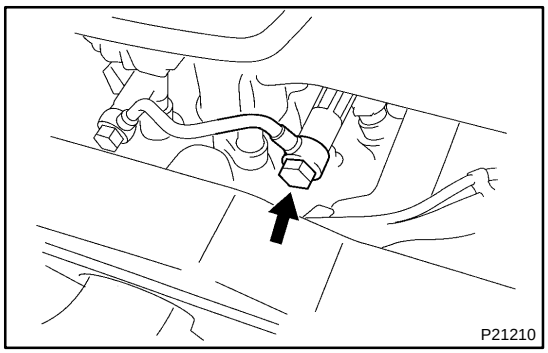

(d) Remove the union bolt holding the fuel pipe to the delivery pipe and gasket.

NOTICE:

▲ **Put a shop towel under the delivery pipe.**

▲ **Slowly loosen the union bolt.**

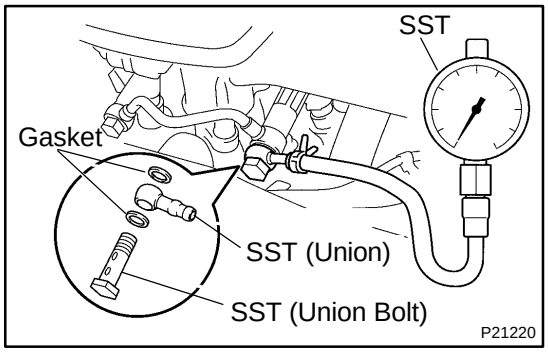

(e) Install SST (pressure gauge) to the delivery pipe with the 2 gaskets and SST (union and union bolt).
SST 09268–45014
Torque: 34.3 N·m (350 kgf·cm, 25 ft·lbf)

(f) Wipe off any splattered gasoline.

(g) Connect a hand–held tester to the DLC3 (See step 1).

(h) Reconnect the negative (–) terminal cable to the battery.

(i) Turn the ignition switch ON.

(j) Measure the fuel pressure.
Fuel pressure:
265 – 304 kPa (2.7 – 3.1 kgf/cm^2, 38 – 44 psi)

If pressure is high, replace the fuel pressure regulator.
If pressure is low, check the fuel hoses, connections, fuel pump, fuel filter and fuel pressure regulator.

(k) Disconnect the hand–held tester from the DLC3.
(l) Reinstall the No. 2 timing belt cover with the 6 bolts.
(m) Start the engine.

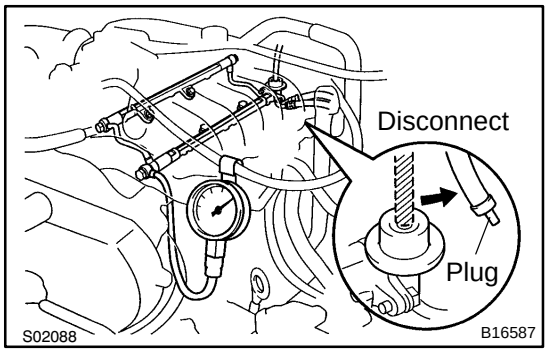

(n) Disconnect the vacuum sensing hose from the fuel pressure regulator, and plug the hose end.
(o) Measure the fuel pressure at idle.
Fuel pressure:
265 – 304 kPa (2.7 – 3.1 kgf/cm^2, 38 – 44 psi)
(p) Reconnect the vacuum sensing hose to the fuel pressure regulator.
(q) Measure the fuel pressure at idle.
Fuel pressure:
226 – 265 kPa (2.3 – 2.7 kgf/cm^2, 33 – 38 psi)

If pressure is not as specified, check the vacuum sensing hose and fuel pressure regulator.

(r) Stop the engine.
(s) Check that the fuel pressure remains as specified for 5 minutes after the engine has stopped.
Fuel pressure: 147 kPa (1.5 kgf/cm^2, 21 psi) or more

If pressure is not as specified, check the fuel pump, pressure regulator and/or injectors.

(t) After checking fuel pressure, disconnect the negative (–) terminal cable from the battery and carefully remove the SST to prevent gasoline from splashing.
SST 09268–45014
(u) Remove the other union bolt, 3 gaskets and fuel pipe from the delivery pipes.
(v) Reinstall the fuel pipe with 4 new gaskets and the 2 union bolts.
Torque: 34.3 N·m (350 kgf·cm, 25 ft·lbf)
(w) Reconnect the negative (–) terminal cable to the battery.
(x) Check for fuel leaks.

SF12Z–04

COMPONENTS

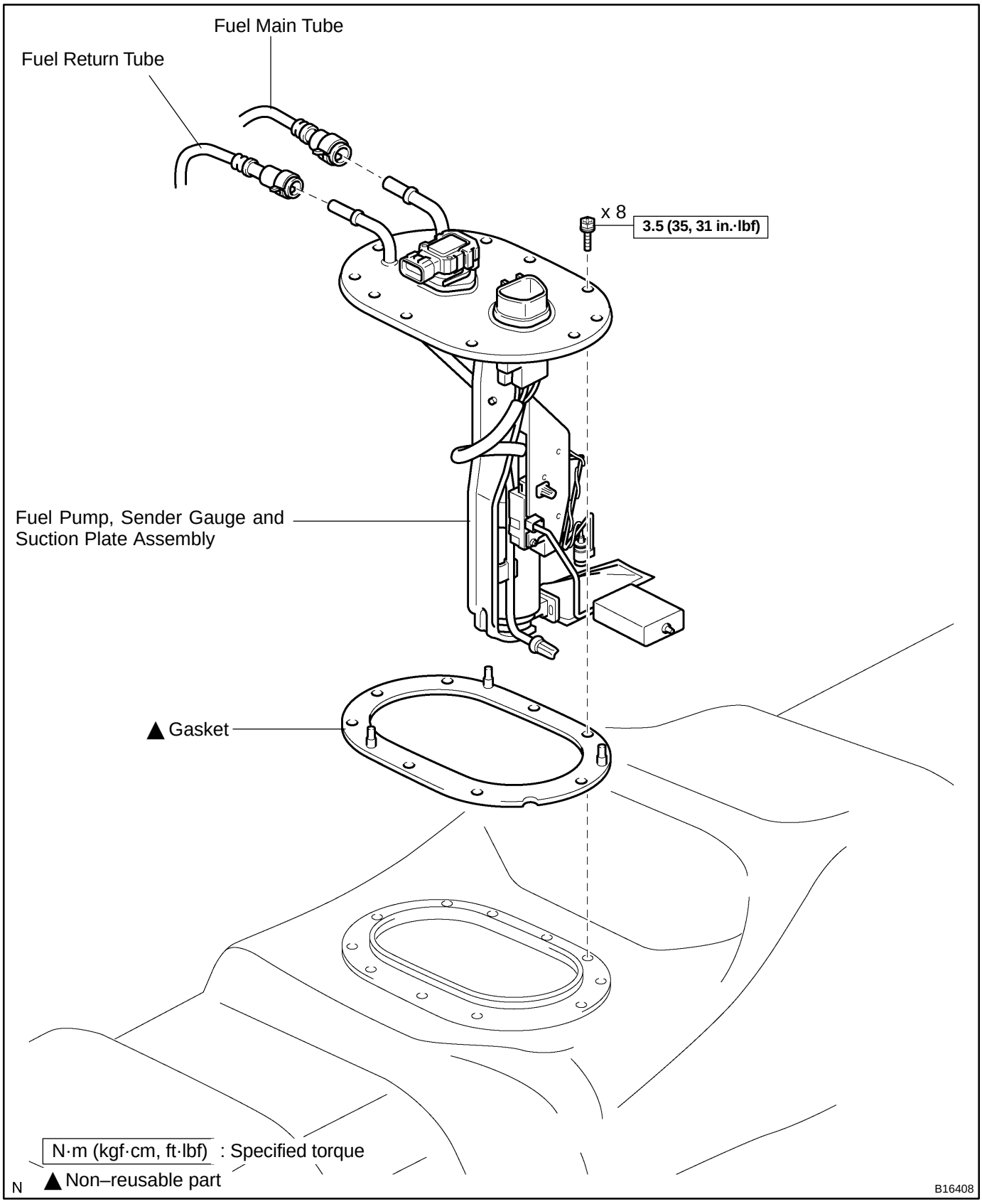

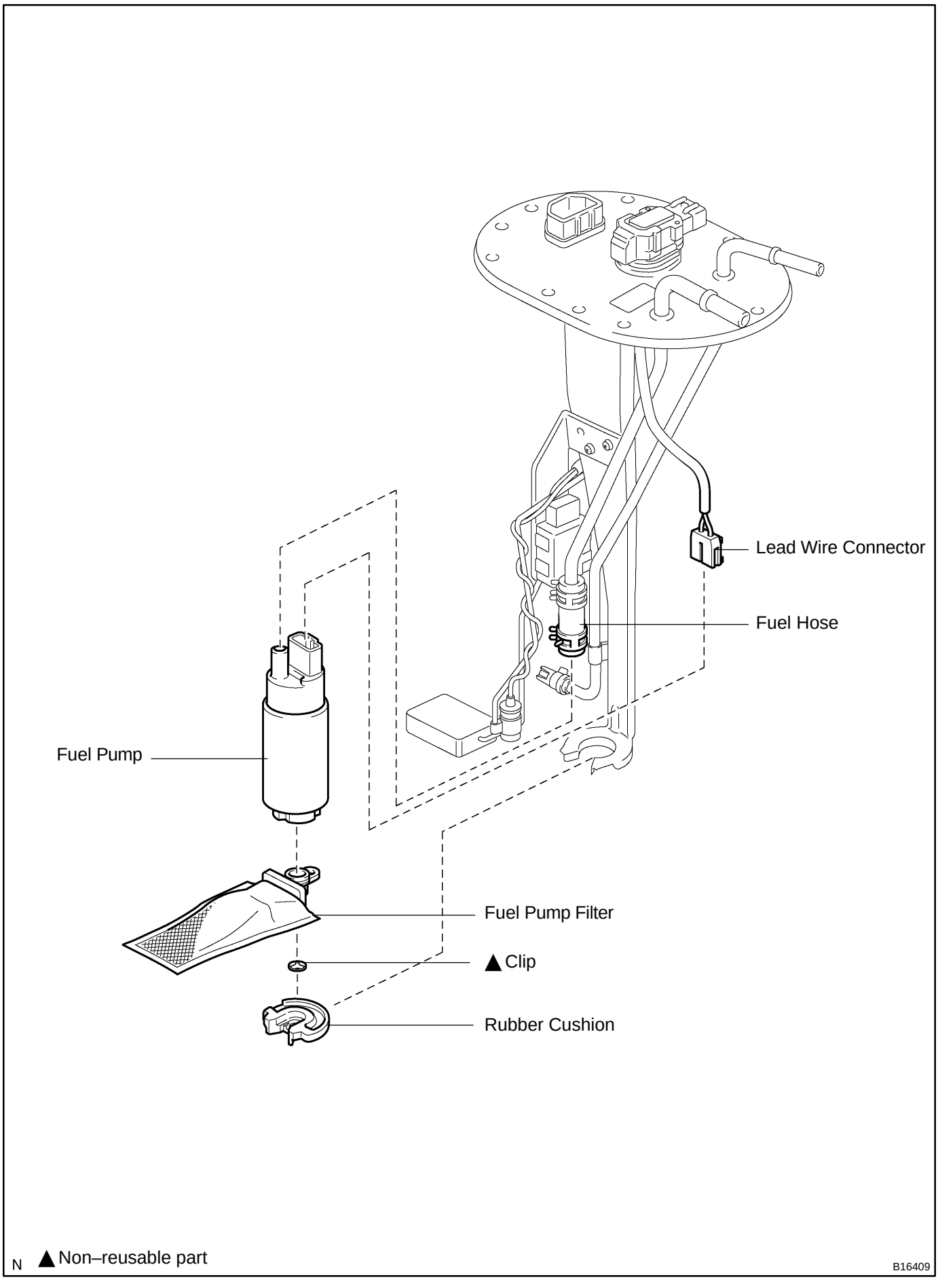
Lead Wire Connector
Fuel Hose
Fuel Pump
Fuel Pump Filter
▲Clip
Rubber Cushion
N ▲Non–reusable part
B16409

SF1U5–01

REMOVAL

CAUTION:
Do not smoke or work near an open frame when working the fuel pump.

1. **REMOVE FUEL TANK (See page SF–24)**
2. **DISCONNECT FUEL PUMP & SENDER GAUGE CONNECTOR**

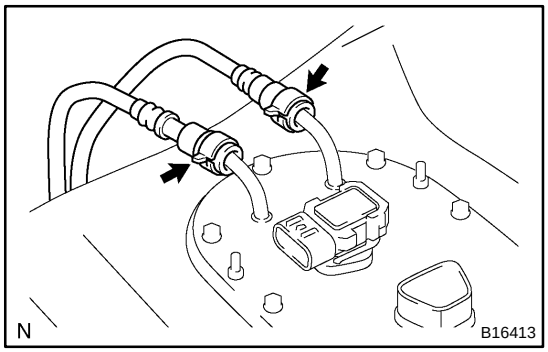

3. **DISCONNECT FUEL MAIN TUBE AND RETURN TUBE FROM SUCTION PLATE (See page SF–1)**

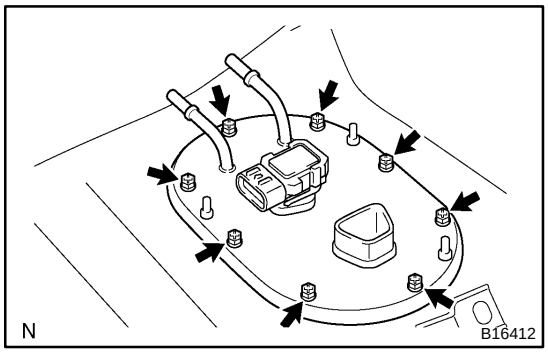

4. **REMOVE FUEL PUMP, SENDER GAUGE AND SUCTION PLATE ASSEMBLY FROM FUEL TANK**

(a) Remove the 8 bolts.
(b) Remove the fuel pump, sender gauge and suction plate assembly.

NOTICE:
- **Do not damage the fuel pump filter.**
- **Be careful not to bend the arm of the sender gauge.**

(c) Remove the gasket from the fuel suction plate.

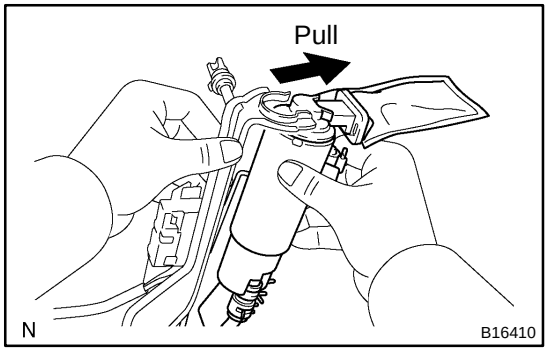

5. **REMOVE FUEL PUMP FROM SUCTION PLATE**

(a) Disconnect the lead wire connector from the fuel pump.
(b) Pull out the lower side of the fuel pump from the suction plate.
(c) Disconnect the fuel hose from the fuel pump, and remove the fuel pump.
(d) Remove the rubber cushion from the fuel pump.

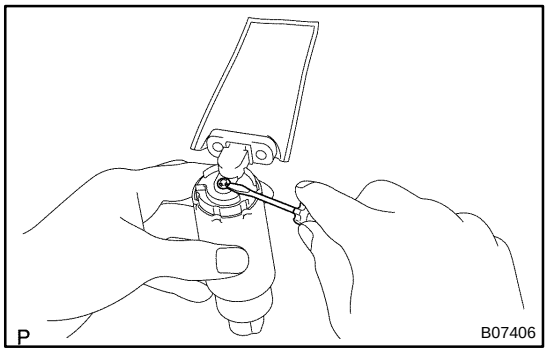

6. **REMOVE FUEL PUMP FILTER FROM FUEL PUMP**

(a) Using a small screwdriver, pry out the clip.
(b) Pull out the pump filter.
(c)

SF131–01

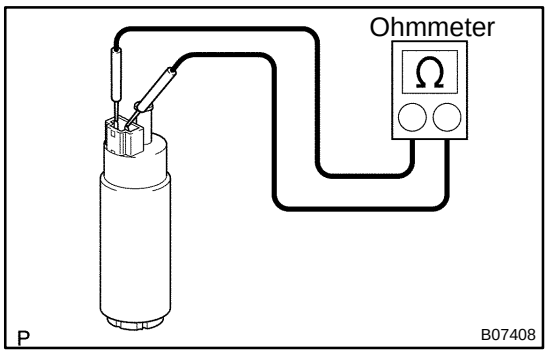

INSPECTION

1. INSPECT FUEL PUMP RESISTANCE

Using an ohmmeter, measure the resistance between the terminals.

Resistance: 0.2 – 3.0 Ω at 20˚C (68˚F)

If the resistance is not as specified, replace the fuel pump.

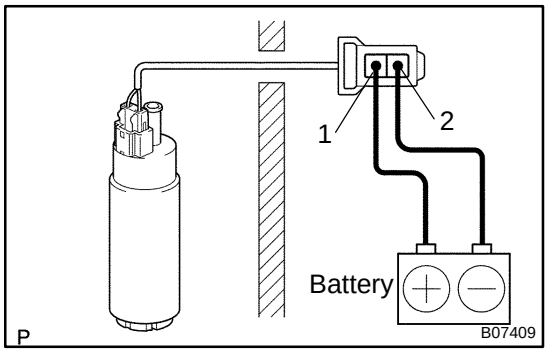

2. INSPECT FUEL PUMP OPERATION

(a) Connect the lead wire to the fuel pump.

(b) Connect the positive (+) lead from the battery to terminal 1 of the connector, and the negative (–) lead to terminal 2. Check that the fuel pump operates.

NOTICE:

- **These tests must be done quickly (within 10 seconds) to prevent the coil from burning out.**
- **Keep the fuel pump as far away from the battery as possible.**
- **Always do switching at the battery side.**

If operation is not as specified, replace the fuel pump and/or read wire.

(c) Disconnect the lead wire to the fuel pump.

SF1U6–01

INSTALLATION

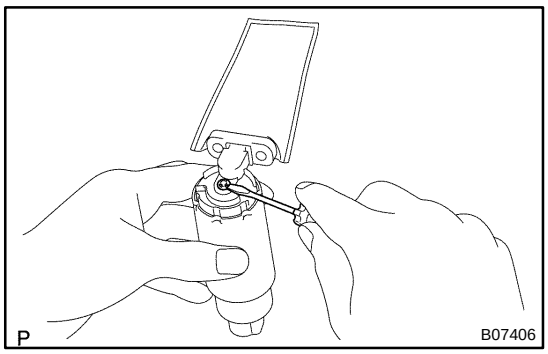

1. INSTALL FUEL PUMP FILTER TO FUEL PUMP

Using a small screwdriver, push in the clip.

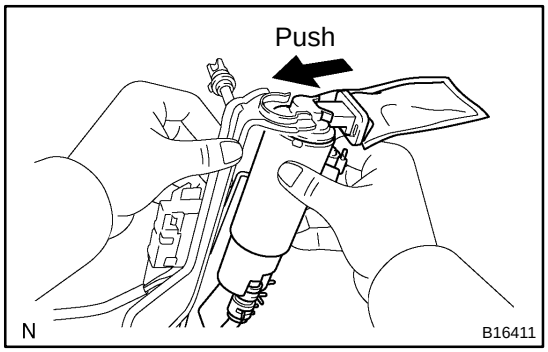

2. INSTALL FUEL PUMP TO SUCTION PLATE

(a) Install the rubber cushion to the fuel pump.
(b) Connect the fuel hose to the outlet port of the fuel pump.
(c) Install the fuel pump by pushing the lower side of the fuel pump.
(d) Connect the lead wire connector to the fuel pump.

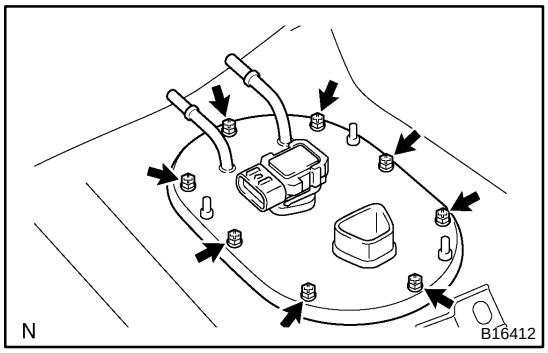

3. INSTALL FUEL PUMP, SENDER GAUGE AND SUCTION PLATE ASSEMBLY TO FUEL TANK

(a) Install a new gasket to the suction plate.
(b) Insert the fuel pump, sender gauge and suction plate assembly into the fuel tank.
(c) Install the suction plate with the 8 bolts.
Torque: 3.5 N·m (35 kgf·cm, 31 in.·lbf)

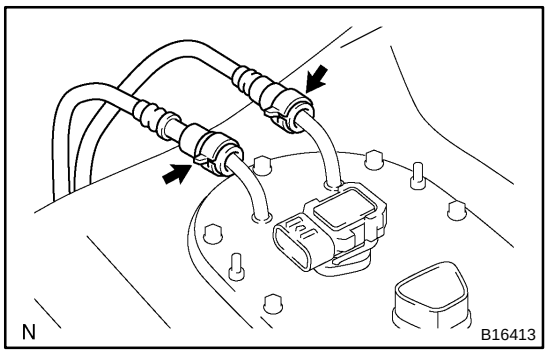

4. CONNECT FUEL MAIN TUBE AND RETURN TUBE TO SUCTION PLATE (See page SF–1)
5. CONNECT FUEL PUMP & SENDER GAUGE CONNECTOR
6. INSTALL FUEL TANK (See page SF–24)
7. CHECK FOR FUEL LEAKS (See page SF–1)

FUEL PRESSURE REGULATOR

SF0C0–05

COMPONENTS

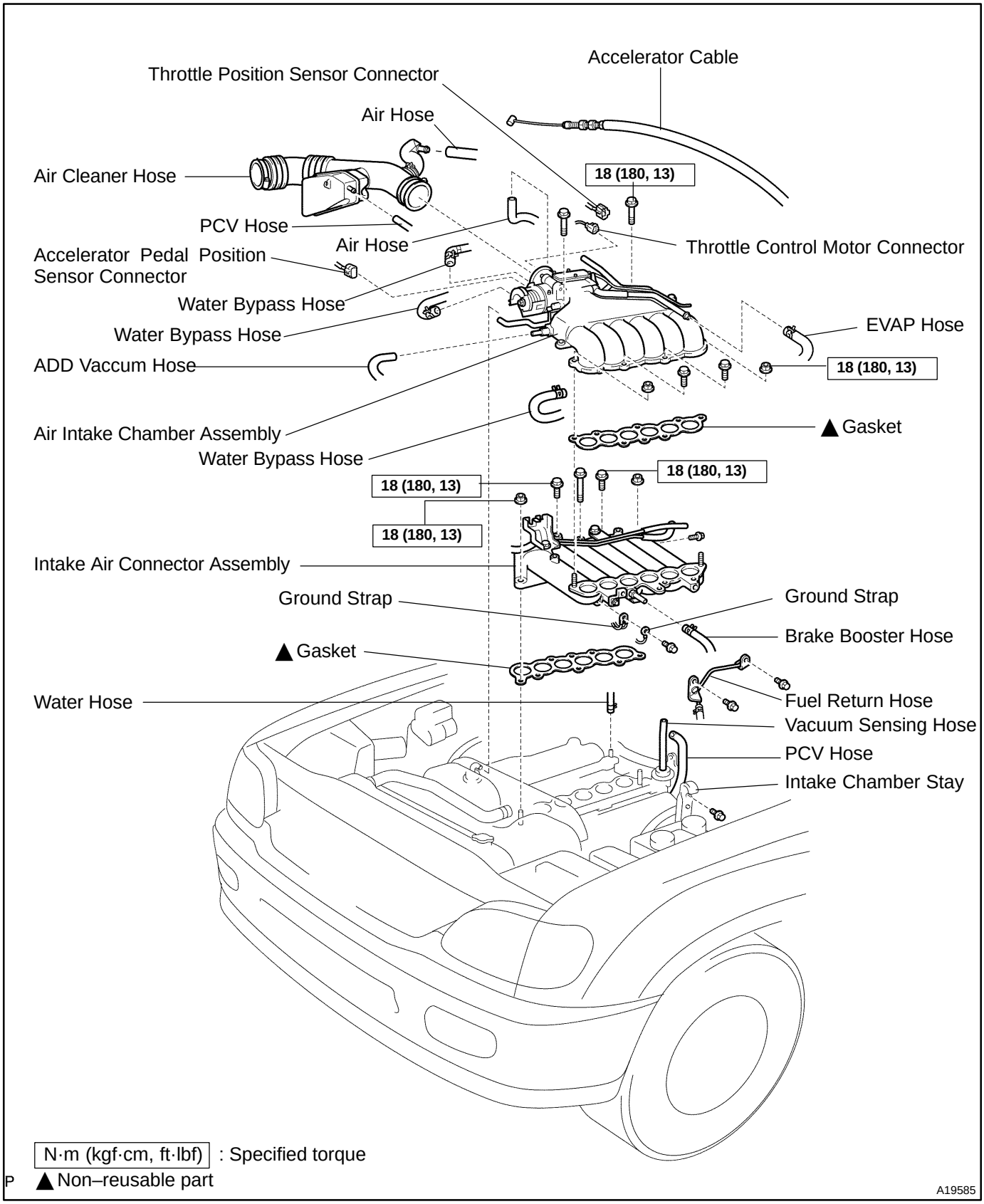

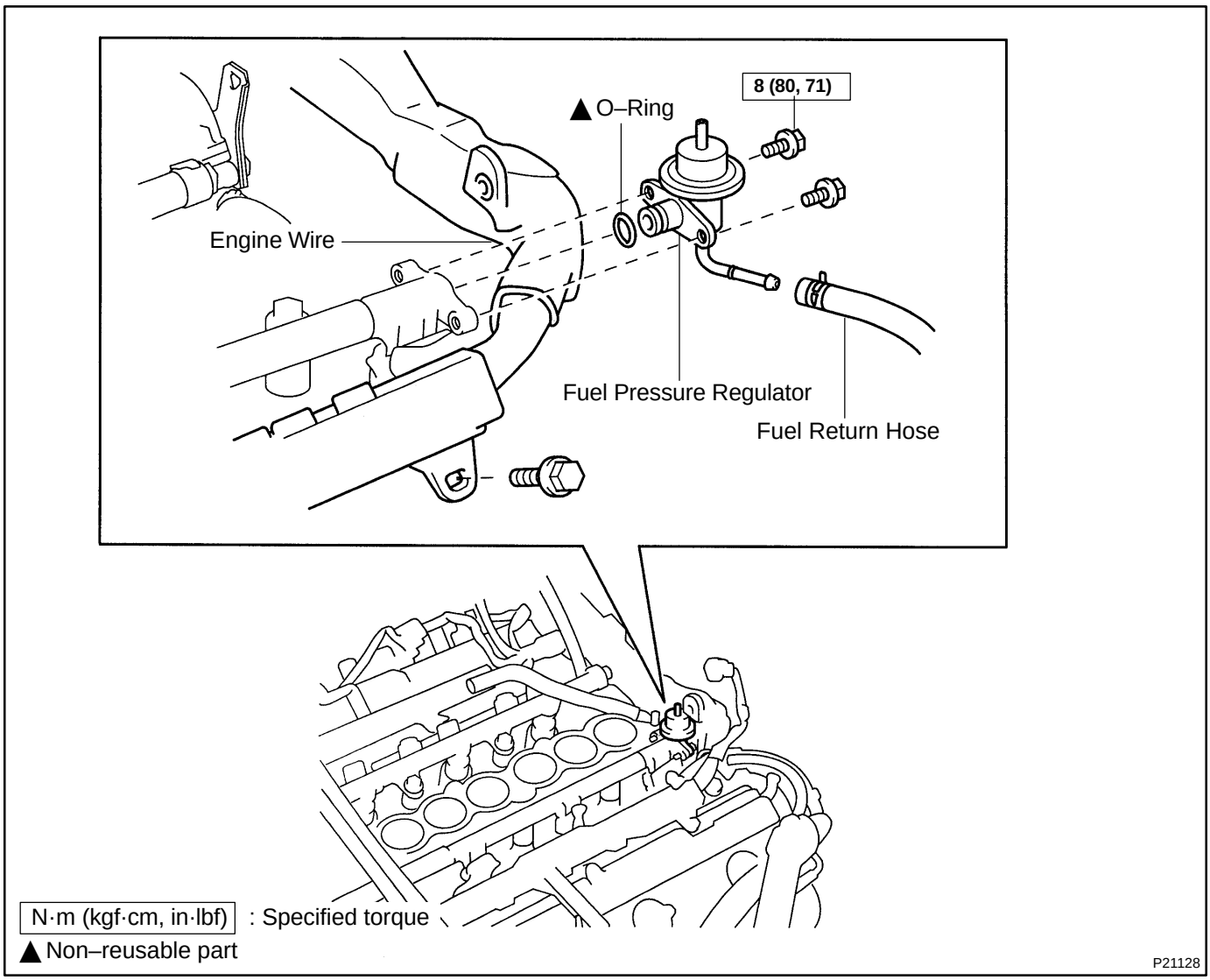
8 (80, 71)
▲O–Ring
Engine Wire
Fuel Pressure Regulator
Fuel Return Hose
N·m (kgf·cm, in·lbf) : Specified torque
▲Non–reusable part
P21128

SF1U7–01

REPLACEMENT

1. REMOVE AIR CLEANER HOSE
2. REMOVE INTAKE AIR CONNECTOR (See page EM–31)
3. DISCONNECT FUEL RETURN HOSE FROM FUEL PRESSURE REGULATOR

CAUTION:
Put a shop rag under the pressure regulator.

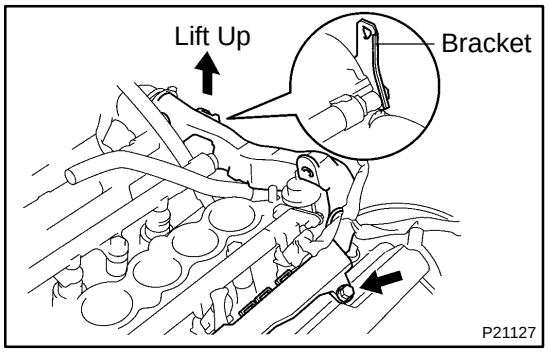

4. REMOVE FUEL PRESSURE REGULATOR

(a) Remove the bolt holding the engine wire to the LH cylinder head cover.
(b) Disconnect the protector from the bracket on the RH cylinder head cover, and lift up the engine wire.
(c) Remove the 2 bolts, and pull out the pressure regulator.
(d) Remove the O–ring from the pressure regulator.

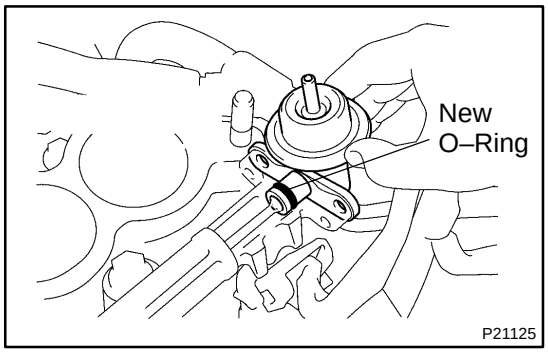

5. REINSTALL FUEL PRESSURE REGULATOR

(a) Apply a light coat of gasoline to a new O–ring, and install it to the pressure regulator.
(b) Attach the pressure regulator to the LH delivery pipe.

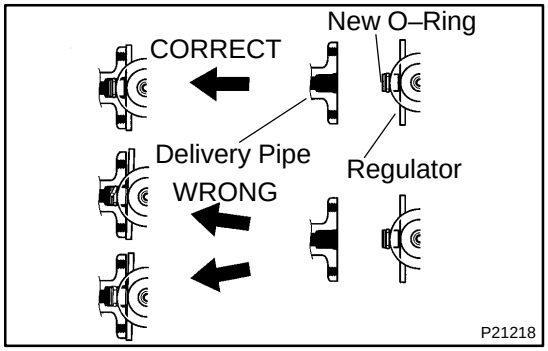

(c) Check that the pressure regulator rotates smoothly.

NOTICE:
If it does not rotate smoothly, the O–ring may be pinched, so remove the pressure regulator and repeat steps (a) to (c) above.

(d) Install the pressure regulator with the 2 bolts.
Torque: 8 N·m (80 kgf·cm, 71 in.·lbf)
(e) Install the engine wire with the bolt.

6. RECONNECT FUEL RETURN HOSE TO FUEL PRESSURE REGULATOR

NOTICE:
Be sure to insert the hose up to the stopper and clip it.

7. REINSTALL INTAKE AIR CONNECTOR (See page EM–67)
8. REINSTALL AIR CLEANER HOSE
9. CHECK FOR FUEL LEAKS

INJECTOR

COMPONENTS

SF0C3–05

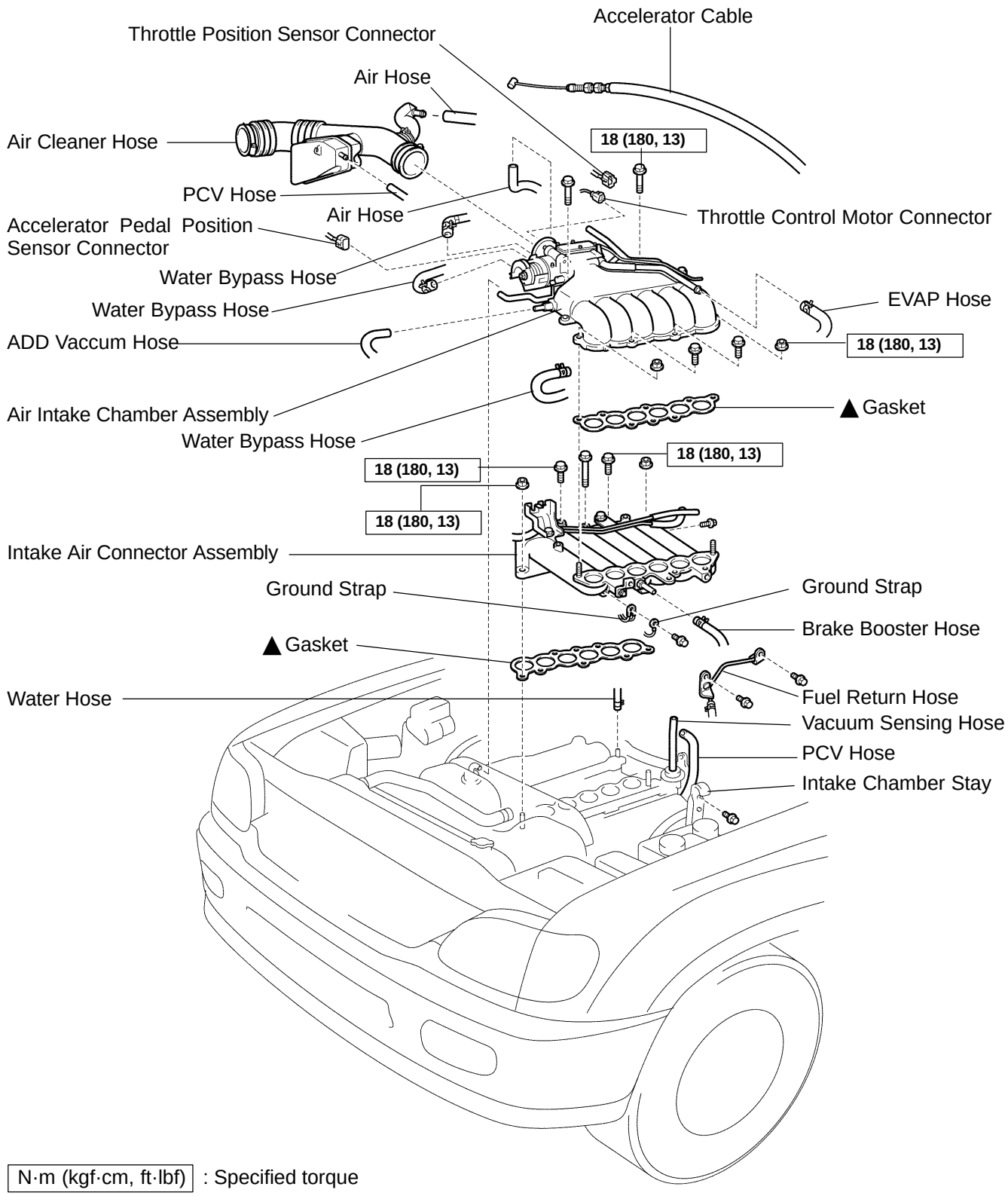

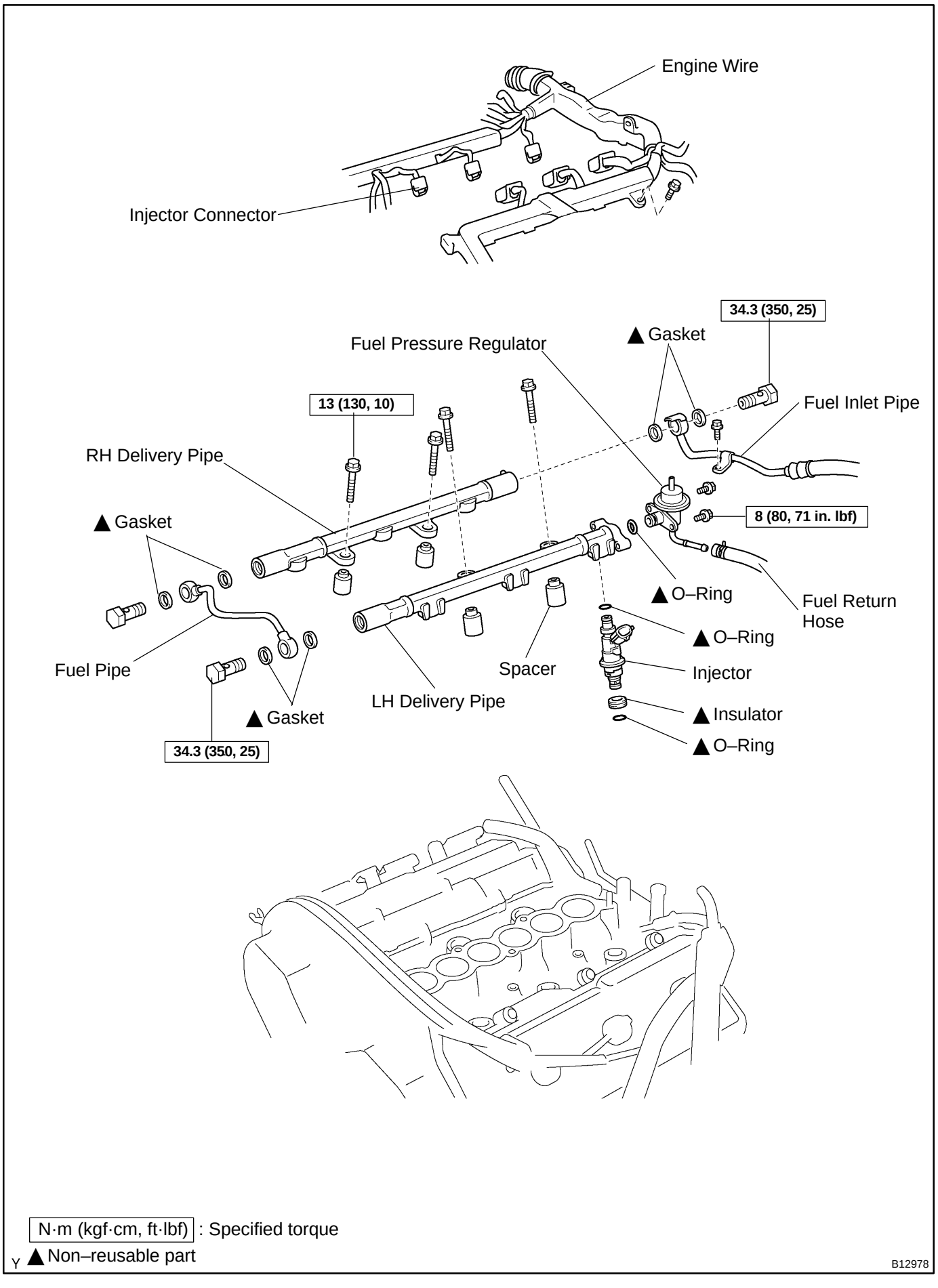

N·m (kgf·cm, ft·lbf) : Specified torque

Y ▲ Non–reusable part

B12978

SF0C4–03

REMOVAL

1. REMOVE AIR CLEANER HOSE
2. REMOVE INTAKE AIR CONNECTOR (See page EM–64)
3. REMOVE FUEL PRESSURE REGULATOR (See page SF–16)

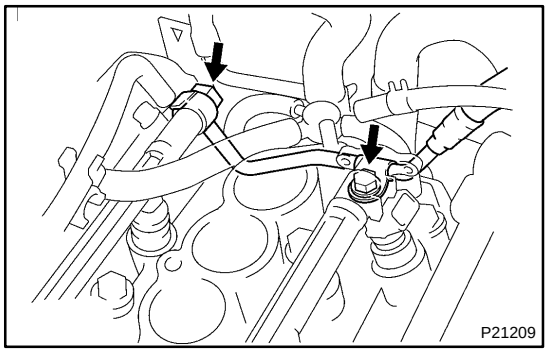

4. DISCONNECT FUEL INLET PIPE

CAUTION:

Catch leaking fuel in a container.

5. REMOVE FUEL PIPE
6. DISCONNECT INJECTOR CONNECTORS

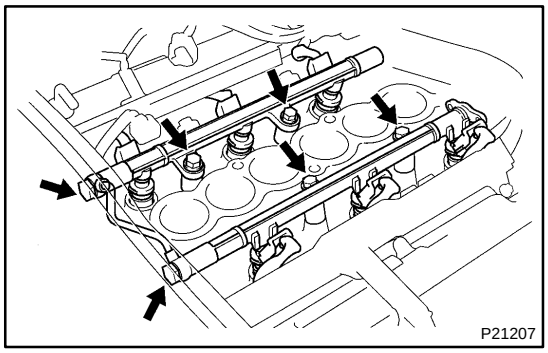

7. REMOVE DELIVERY PIPES AND INJECTORS

NOTICE:

Be careful not to drop the injectors when removing the delivery pipes.

(a) Remove the 4 bolts and delivery pipes together with the 6 injectors
(b) Remove the 4 spacers from the intake manifold.
(c) Pull out the 6 injectors from the delivery pipes.
(d) Remove the 2 O–rings and 2 grommets from each injector.

SF1U8–01

INSPECTION

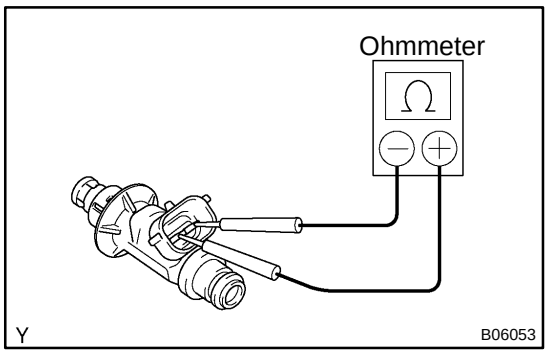

1. INSPECT INJECTOR RESISTANCE

Using an ohmmeter, measure the resistance between the terminals.

Resistance: 13.4 – 14.2 Ω at 20˚C (68˚F)

If the resistance is not as specified, replace the injector.

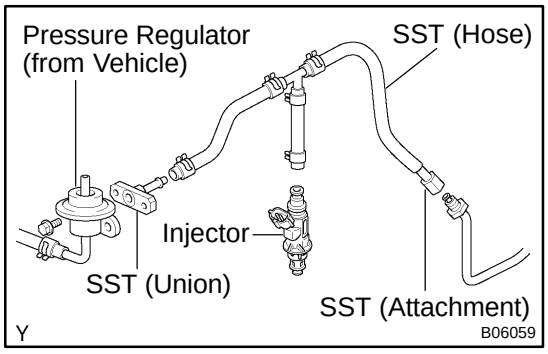

2. INSPECT INJECTOR INJECTION

CAUTION:

Keep injector clear of sparks during the test.

(a) Disconnect the fuel inlet pipe from the fuel tube.

(b) Connect SST (attachment and hose) to the fuel tube.
SST 09268–41047 (09268–52011)

(c) Connect the fuel return hose, SST (union) and SST (hose) to the fuel pressure regulator.
SST 09268–41047 (09268–41091)

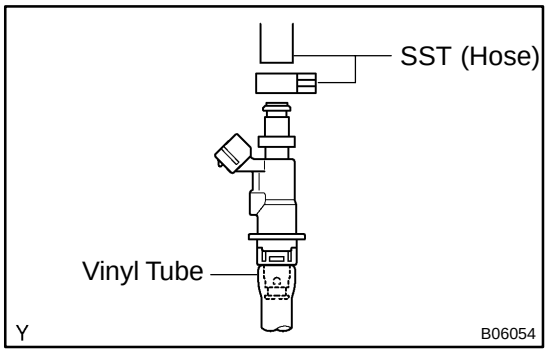

(d) Install the O–ring to the injector.

(e) Connect SST (union and hose) to the injector, and hold the injector and union with SST (clamp).
SST 09268–41047

(f) Put the injector into the graduated cylinder.

HINT:

Install a suitable vinyl tube onto the injector to prevent gasoline from splashing out.

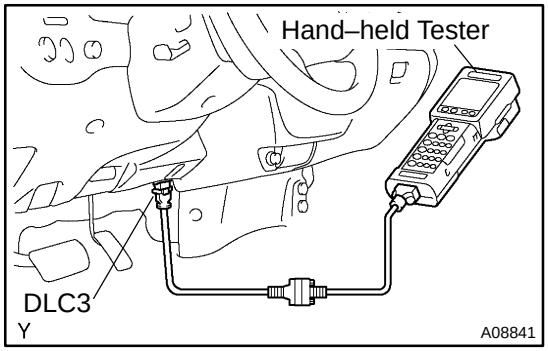

(g) Connect a hand–held tester to the DLC3.

(h) Connect the battery negative (–) cable to the battery.

(i) Turn the ignition switch ON, and push the hand–held tester main switch ON.

NOTICE:

Do not start the engine.

(j) Select the ACTIVE TEST mode on the hand–held tester.

(k) Please refer to the hand–held tester operator's manual for further details.

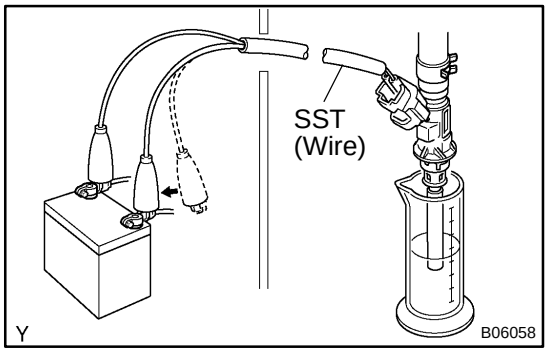

(l) Connect SST (wire) to the injector and battery for 15 seconds, and measure the injection volume with a graduated cylinder. Test each injector 2 or 3 times.
SST 09842–30070
Volume: 56 – 69 cm^3 (3.4 – 4.3 cu in.) per 15 sec.
Difference between each injector:
13 cm^3 (0.8 cu in.) or less

If the injection volume is not as specified, replace the injector.

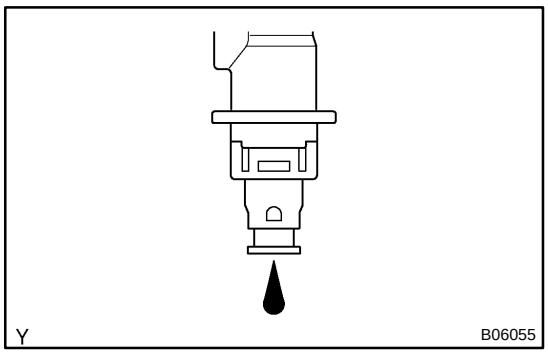

3. INSPECT LEAKAGE

(a) In the condition above, disconnect the test probes of SST (wire) from the battery and check the fuel leakage from the injector.
SST 09842–30070
Fuel drop: 1 drop or less per 12 min.

(b) Turn the ignition switch OFF.

(c) Disconnect the negative (–) terminal cable from the battery.

(d) Remove the SST.
SST 09268–41047

(e) Disconnect the hand–held tester from the DLC3.

SF0C6–04

INSTALLATION

NOTICE:

- **Be careful not to drop the injectors when installing the delivery pipes.**
- **Pay attention to put any hung load on the injector to and from the side direction.**

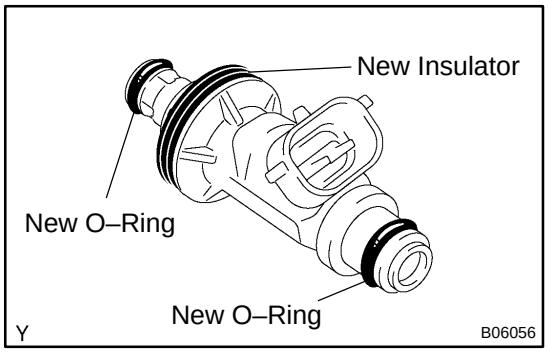

1. TEMPORARILY INSTALL INJECTORS AND DELIVERY PIPES

(a) Install a new insulator to each injector.

(b) Apply a light coat of spindle oil or gasoline to 2 new O–rings and install them to each injector.

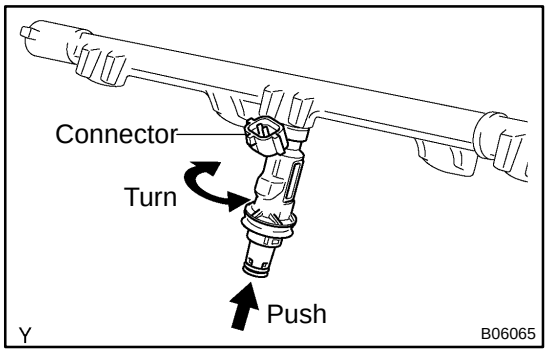

(c) While turning the injector clockwise and counterclockwise, push it to the delivery pipes. Install the 6 injectors.

(d) Position the injector connector outward.

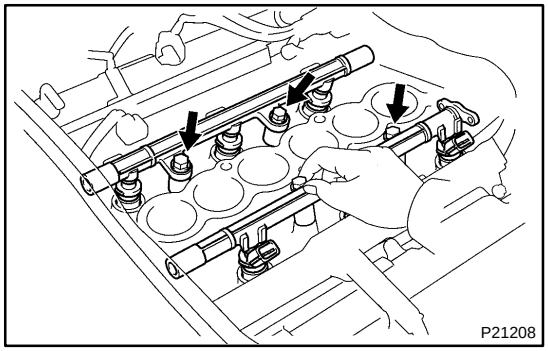

(e) Place the 4 spacers in position on the intake manifold.

(f) Place the delivery pipes with the 6 injectors in position on the intake manifold.

(g) Temporarily install the 4 bolts holding the delivery pipes to the intake manifold.

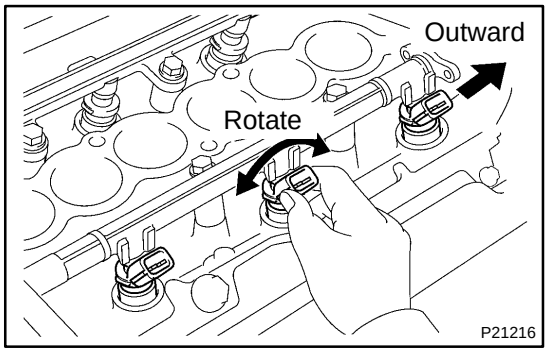

(h) Check that the injectors rotate smoothly.

HINT:

If injectors do not rotate smoothly, the probable cause is incorrect installation of O–rings. Replace the O–rings.

(i) Position the injector connector outward.

2. CONNECT INJECTOR CONNECTORS

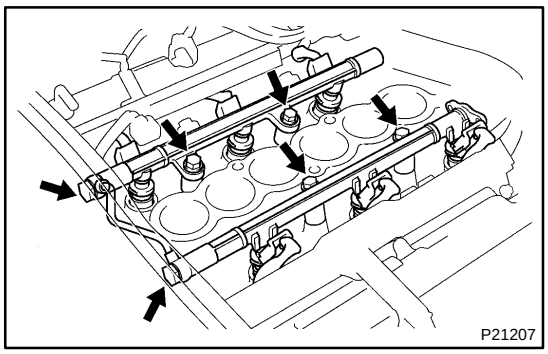

3. INSTALL FUEL PIPE AND TIGHTENING DELIVERY PIPE HOLDING BOLTS

(a) Install the fuel pipe with 4 new gaskets and the 2 union bolts.
Torque: 34.3 N·m (350 kgf·cm, 25 ft·lbf)

(b) Tighten the 4 bolts holding the delivery pipes to the intake manifold.
Torque: 13 N·m (130 kgf·cm, 10 ft·lbf)

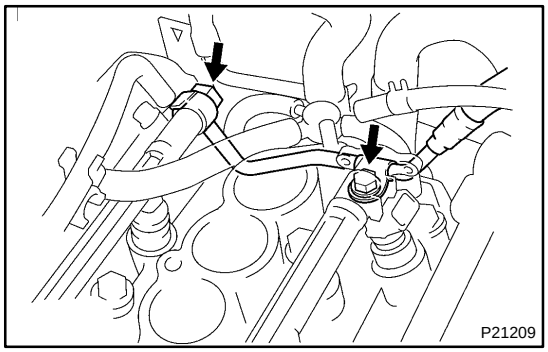

4. CONNECT FUEL INLET PIPE

(a) Temporarily install the union and 2 new gaskets, and connect the fuel pipe.

(b) Install the clamp bolt.
Torque: 8 N·m (80 kgf·cm, 71 in.·lbf)

(c) Tighten the union bolt.
Torque: 34.3 N·m (350 kgf·cm, 25 ft·lbf)

5. INSTALL FUEL PRESSURE REGULATOR (See page SF–16)

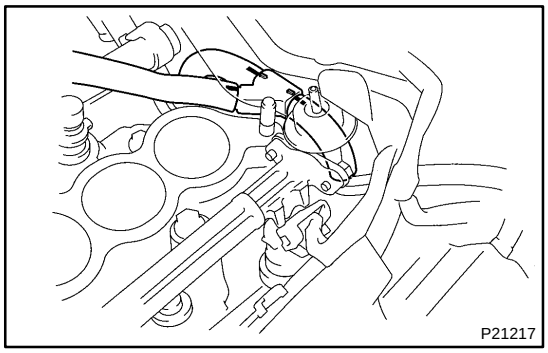

6. VISUALLY INSPECT AIR ASSIST LINES AND CONNECTIONS

Look for loose connections, sharp bends or damage.

7. INSTALL INTAKE AIR CONNECTOR (See page EM–67)

8. INSTALL AIR CLEANER HOSE

9. CHECK FOR FUEL LEAKS

FUEL TANK AND LINE

SF0OZ–14

COMPONENTS

CAUTION:

- ▲ **Always use new gaskets when replacing the fuel tank or component parts.**
- ▲ **Apply the proper torque to all parts tightened**

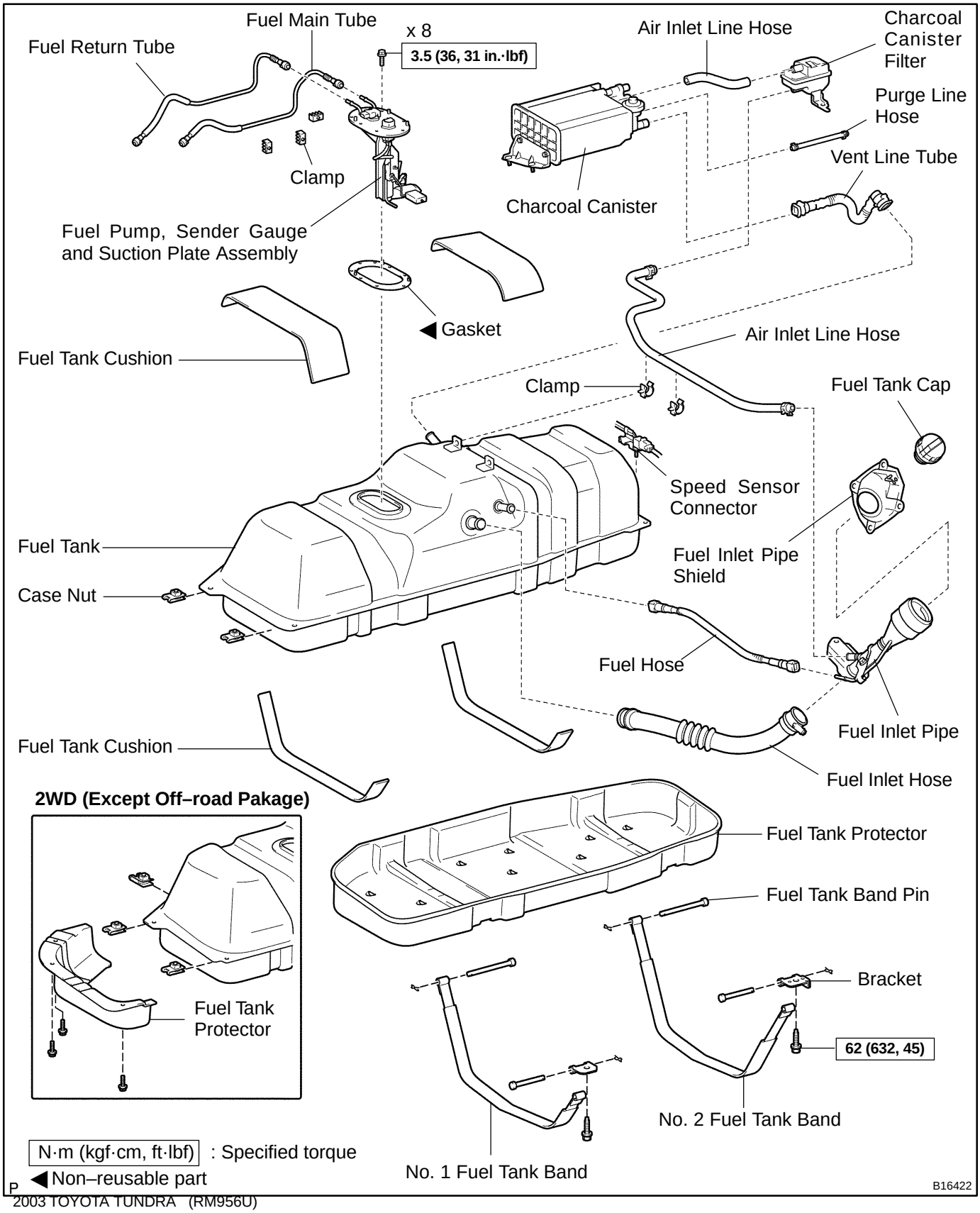

SF0P0–11

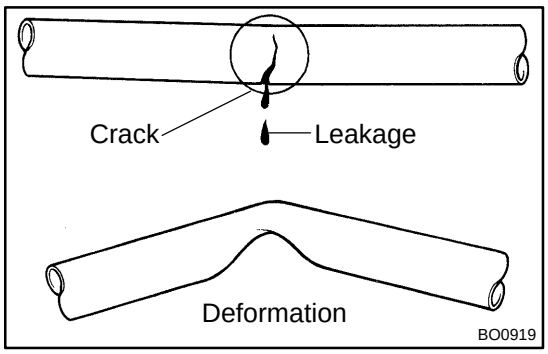

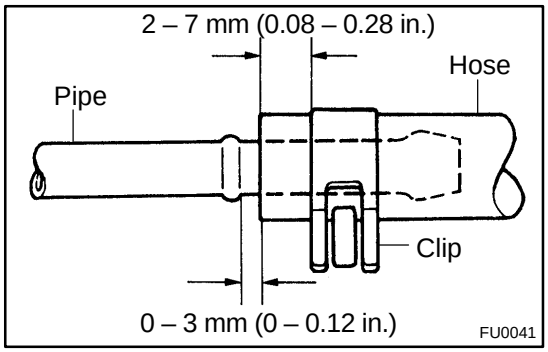

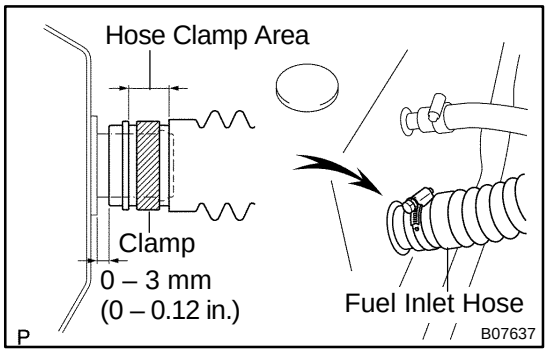

INSPECTION

INSPECT FUEL TANK AND LINE

(a) Check the fuel lines for cracks or leakage, and all connections for deformation.

(b) Check the fuel tank vapor vent system hoses and connections for looseness, sharp bends or damage.

(c) Check the fuel tank for deformation, cracks, fuel leakage or tank band looseness.

(d) Check the filler neck for damage or fuel leakage.

(e) Hose and pipe connections are as shown in the illustration.

If a problem is found, repair or replace the parts as necessary.

MASS AIR FLOW (MAF) METER

SF0C8–05

INSPECTION

1. REMOVE MAF METER

(a) Disconnect the MAF meter connector.

(b) Remove the 2 screws and MAF meter.

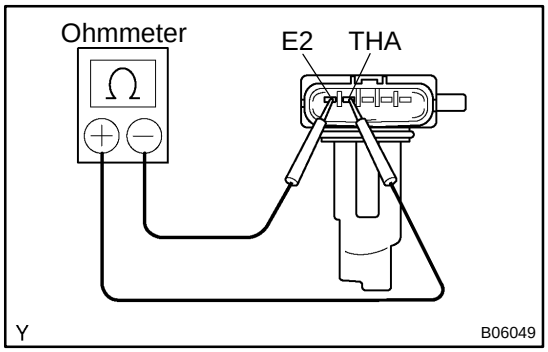

2. INSPECT MAF METER RESISTANCE

Using an ohmmeter, measure the resistance between terminals THA and E2.

Temperature	Resistance
–20˚C (–4˚F)	13.6 – 18.4 kΩ
20˚C (68˚F)	2.2 – 2.7 kΩ
60˚C (140˚F)	0.5 – 0.7 kΩ

If the resistance is not as specified, replace the MAF meter.

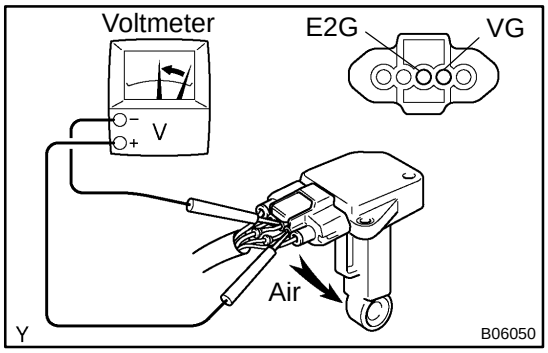

3. INSPECT MAF METER OPERATION

(a) Connect the MAF meter connector.

(b) Using a voltmeter, connect the positive (+) tester probe to terminal VG, and negative (–) tester probe to terminal E2G.

(c) Turn the ignition switch ON.

(d) Blow air into the MAF meter, and check that the voltage fluctuates.

If operation is not as specified, replace the MAF meter.

(e) Turn the ignition switch OFF.

(f) Disconnect the MAF meter connector.

4. REINSTALL MAF METER

(a) Install the MAF meter with the 2 screws.

(b) Connect the MAF meter connector.

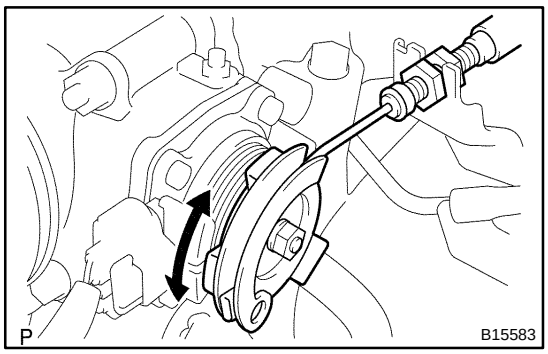

THROTTLE BODY

SF1U9–01

ON–VEHICLE INSPECTION

1. INSPECT SYSTEM OPERATION

(a) Check that the throttle linkage moves smoothly.

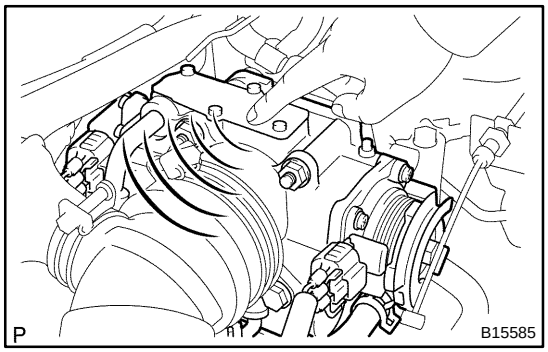

(b) Inspect the throttle control motor for operating sound.
   (1) Turn the ignition switch ON.
   (2) When turning the accelerator pedal position sensor lever, check the running sound of the motor. Also, check that there is no friction sound.

If operation is not as specified, check the throttle control motor (See step 2), wiring and ECM.

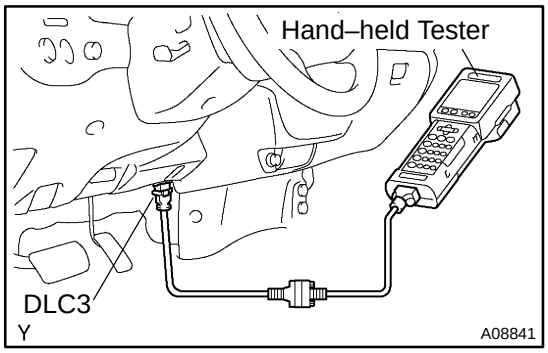

(c) Inspect the accelerator pedal position sensor.
   (1) Connect the hand–held tester to the DLC3.
   (2) Check that the MIL does not light up.
   (3) When turning the accelerator pedal position sensor lever to the full–open position, check that the throttle valve opening percentage (THROTTLE POS) of the CURRENT DATA showns the standard value.

   Standard throttle valve opening percentage:
   60 % or more

If operation is not as specified, check that the accelerator pedal position sensor (See step 4), wiring and ECM.

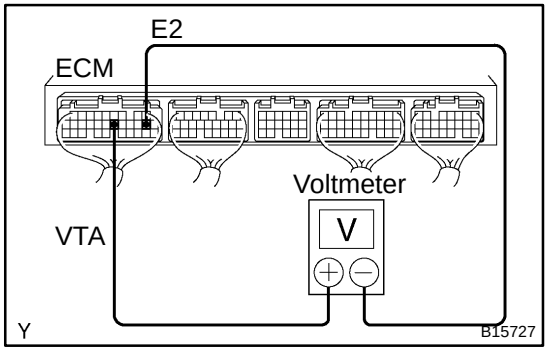

If you have no hand–held tester, measure the voltage between terminals VTA and E2 of the ECM connector.

(d) Inspect the idle speed.
   (1) Start the engine and check that the MIL does not light up.
   (2) Allow the engine to warm up to normal operating temperature.
   (3) Turn the A/C compressor ON to OFF, and check the idle speed.

   Idle speed (Transmission in neutral): 700 ± 50 rpm

NOTICE:
Perform inspection under condition without electrical load.

(e) After checking the above (b) to (d), perform the driving test and check that there is no sense of incongruity.

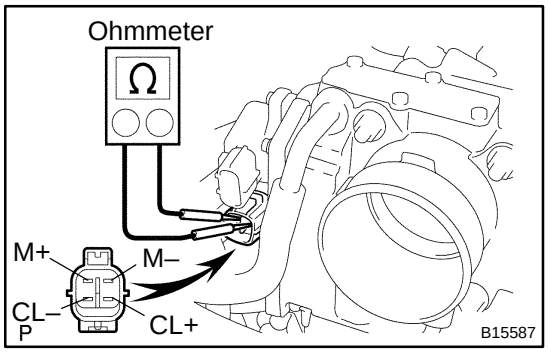

2. INSPECT THROTTLE CONTROL MOTOR

(a) Disconnect the throttle control motor connector.

(b) Using an ohmmeter, measure the motor resistance between terminals M+ and M–.

Motor resistance: 0.3 – 100 Ω at 20˚C (68˚F)

If the resistance is not as specified, replace the throttle body assembly (See page SF–30).

(c) Using an ohmmeter, measure the clutch resistance between terminals CL+ and CL–.

Clutch resistance: 4.2 – 5.2 Ω at 20˚C (68˚F)

If the resistance is not as specified, replace the throttle body assembly (See page SF–30).

(d) Reconnect the throttle control motor connector.

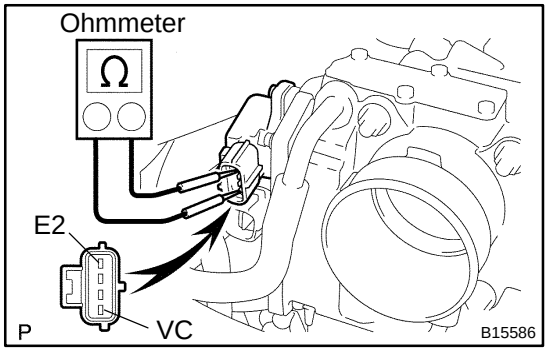

3. INSPECT THROTTLE POSITION SENSOR

(a) Disconnect the throttle position sensor connector.

(b) Using an ohmmeter, measure the resistance between terminals VC and E2.

Resistance: 1.2 – 3.2 kΩ at 20˚C (68˚F)

If the resistance is not as specified, replace the throttle body assembly (See page SF–30).

(c) Reconnect the throttle position sensor connector.

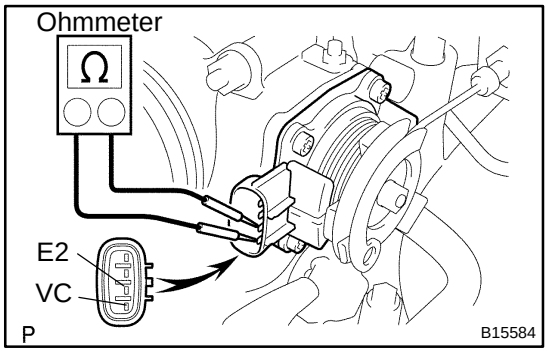

4. INSPECT ACCELERATOR PEDAL POSITION SENSOR

(a) Disconnect the pedal position sensor connector.

(b) Using an ohmmeter, measure the resistance between terminals VC and E2.

Resistance: 1.2 – 3.2 kΩ at 20˚C (68˚F)

If the resistance is not as specified, replace the throttle body assembly (See page SF–30).

(c) Reconnect the pedal position sensor connector.

THROTTLE BODY

COMPONENTS

SF0CE–05

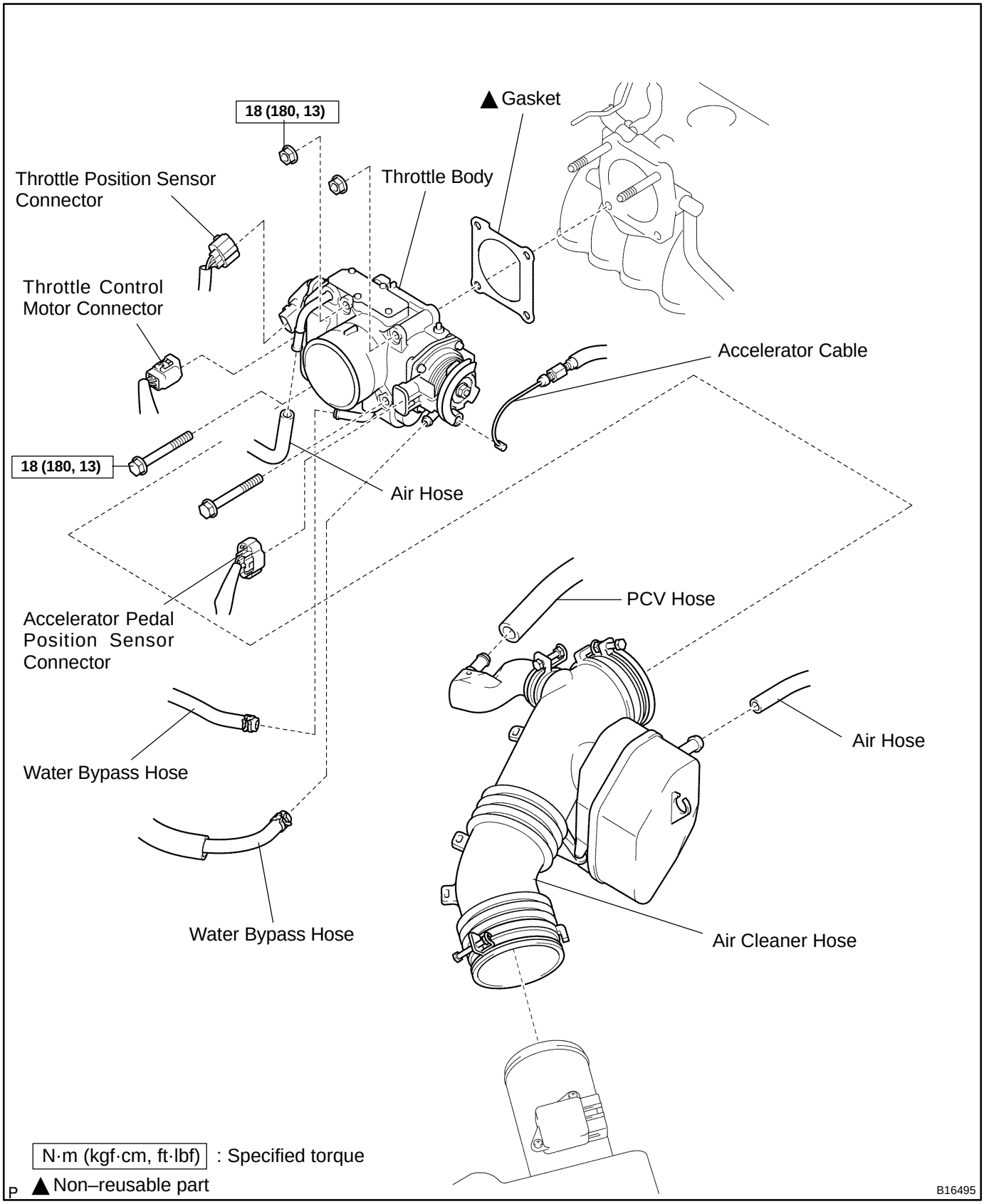

SF1UA–01

REPLACEMENT

1. DRAIN ENGINE COOLANT
2. DISCONNECT ACCELERATOR CABLE FROM THROTTLE BODY
3. REMOVE AIR CLEANER HOSE

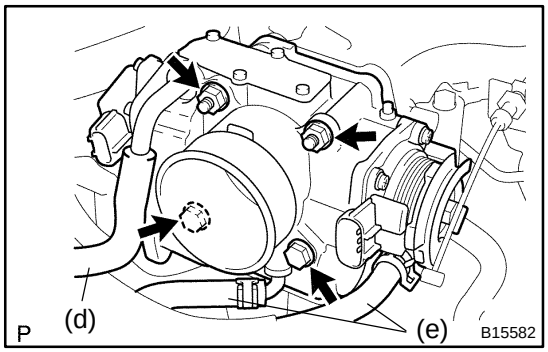

4. REMOVE THROTTLE BODY

(a) Disconnect the throttle position sensor connector.
(b) Disconnect the throttle control motor connector.
(c) Disconnect the accelerator pedal position sensor connector.
(d) Disconnect the air hose.
(e) Disconnect the 2 water bypass hoses.
(f) Remove the 2 bolts, 2 nuts, throttle body and gasket.

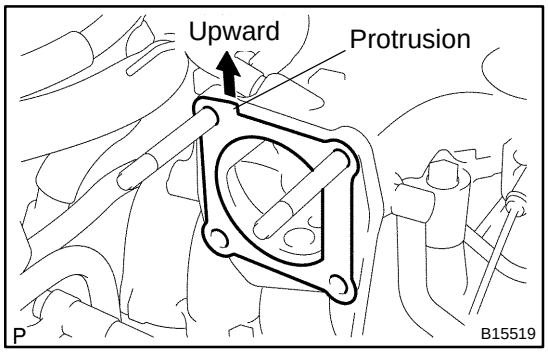

5. REINSTALL THROTTLE BODY

(a) Place a new gasket on the air intake chamber facing the protrusion upward.
(b) Install the throttle body with the 2 bolts and 2 nuts.
Torque: 18 N·m (180 kgf·cm, 13 ft·lbf)
(c) Connect the throttle position sensor connector.
(d) Connect the throttle control motor connector.
(e) Connect the accelerator pedal position sensor connector.
(f) Connect the air hose.
(g) Connect the 2 water bypass hoses.

6. RECONNECT ACCELERATOR CABLE TO THROTTLE BODY
7. REINSTALL AIR CLEANER HOSE
8. REFILL WITH ENGINE COOLANT
9. START ENGINE AND CHECK FOR COOLANT LEAKS

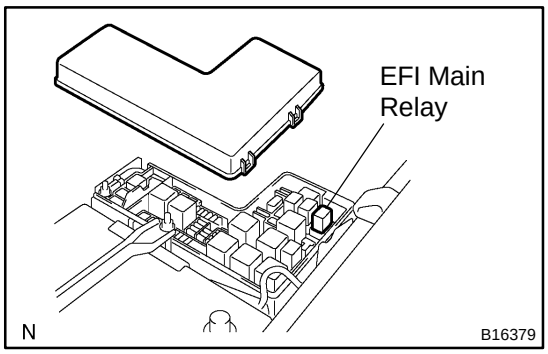

EFI MAIN RELAY

SF06G–17

INSPECTION

1. REMOVE RELAY BOX COVER

2. REMOVE EFI MAIN RELAY (Marking: EFI)

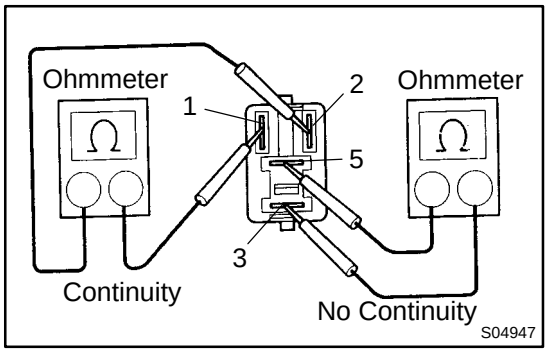

3. INSPECT EFI MAIN RELAY

(a) Inspect the relay continuity.

(1) Using an ohmmeter, check that there is continuity between terminals 1 and 2.

If there is no continuity, replace the relay.

(2) Check that there is no continuity between terminals 3 and 5.

If there is continuity, replace the relay.

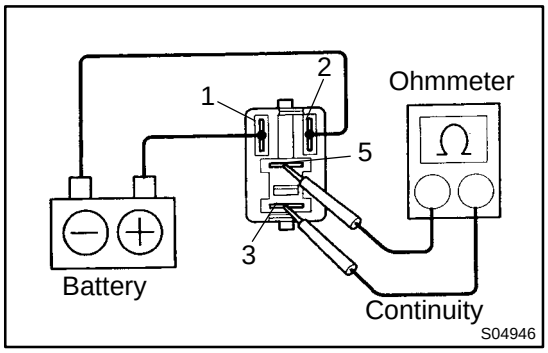

(b) Inspect the relay operation.

(1) Apply battery voltage across terminals 1 and 2.

(2) Using an ohmmeter, check that there is continuity between terminals 3 and 5.

If there is no continuity, replace the relay.

4. REINSTALL EFI MAIN RELAY

5. REINSTALL RELAY BOX COVER

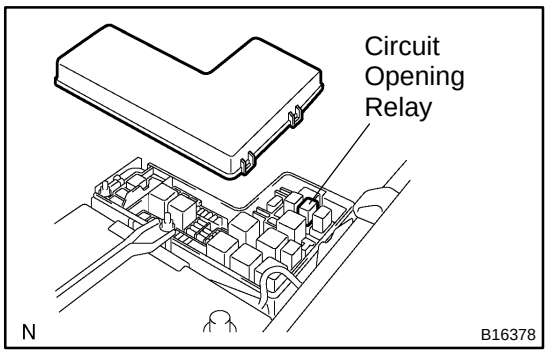

CIRCUIT OPENING RELAY

SF136–05

INSPECTION

1. REMOVE RELAY BOX COVER

2. REMOVE CIRCUIT OPENING RELAY (Marking: C/OPN)

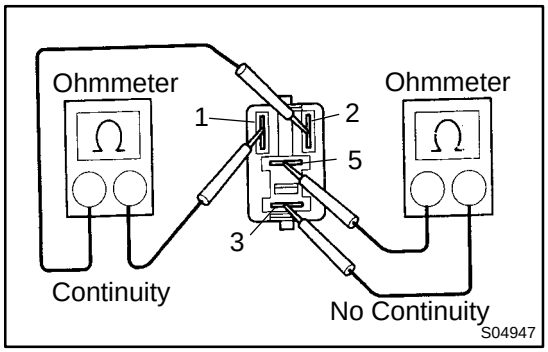

3. INSPECT CIRCUIT OPENING RELAY

(a) Inspect the relay continuity.

(1) Using an ohmmeter, check that there is continuity between terminals 1 and 2.

If there is no continuity, replace the relay.

(2) Check that there is no continuity between terminals 3 and 5.

If there is continuity, replace the relay.

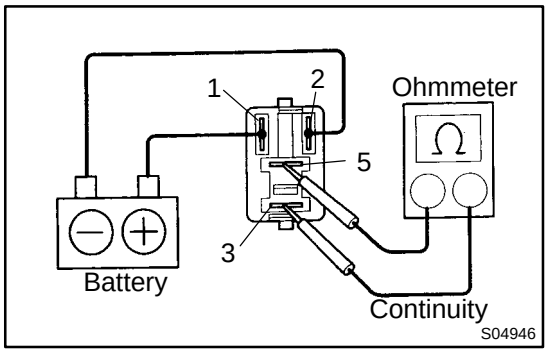

(b) Inspect the relay operation.

(1) Apply battery positive voltage across terminals 1 and 2.

(2) Using an ohmmeter, check that there is continuity between terminals 3 and 5.

If there is no continuity, replace the relay.

4. REINSTALL CIRCUIT OPENING RELAY

5. REINSTALL RELAY BOX COVER

VSV FOR EVAPORATIVE EMISSION (EVAP)

COMPONENTS

SF1UB–01

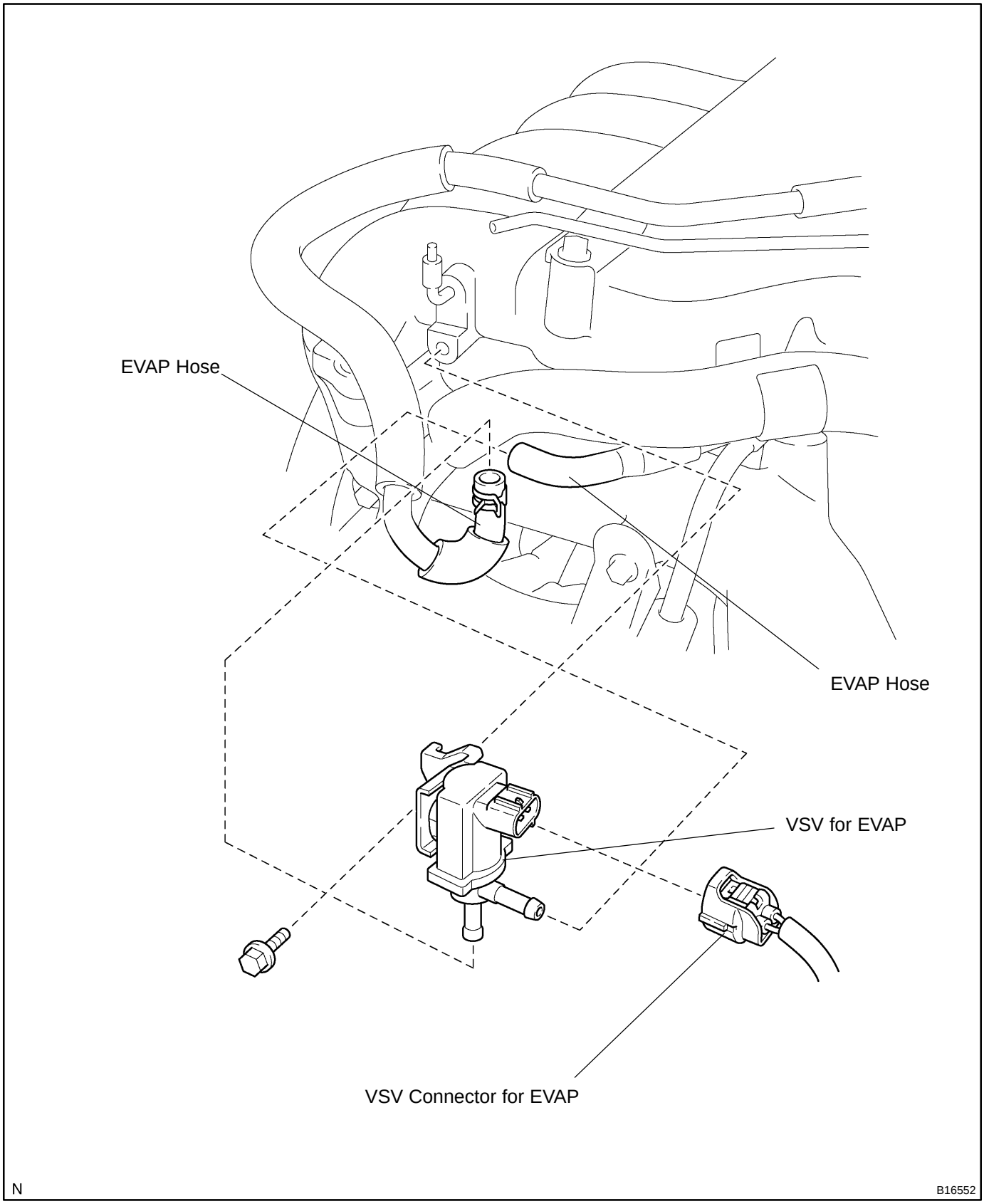

SF1UC–01

INSPECTION

1. REMOVE VSV

(a) Disconnect the VSV connector.

(b) Disconnect the 2 EVAP hoses.

(c) Remove the bolt and VSV.

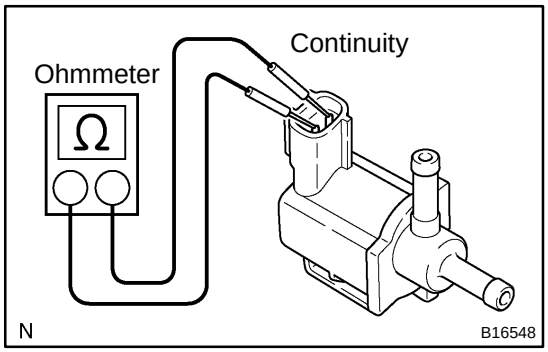

2. INSPECT VSV FOR OPEN CIRCUIT

(a) Inspect the VSV for open circuit.

Using an ohmmeter, measure the resistance between the terminals.

Resistance: 26 – 30 Ω at 20˚C (68˚F)

If resistance is not as specified, replace the VSV.

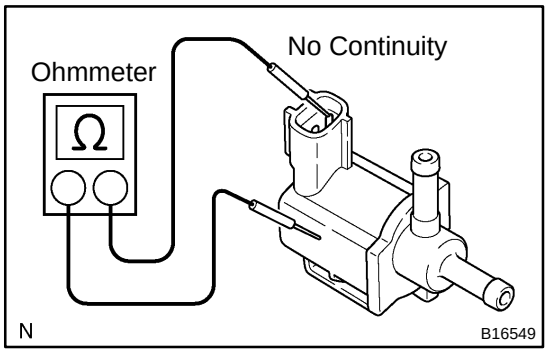

(b) Inspect the VSV for ground.

Using an ohmmeter, check that there is no continuity between each terminal and the body.

If there is continuity, replace the VSV.

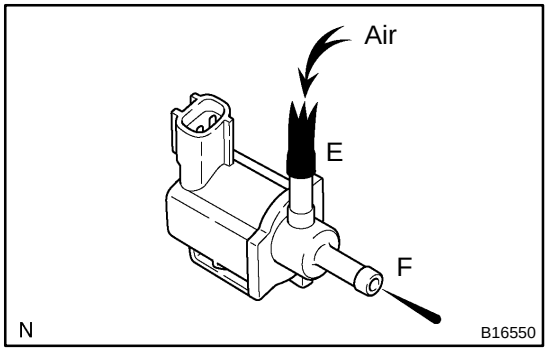

(c) Inspect the VSV operation.

(1) Check that air flows difficulty from ports E to F.

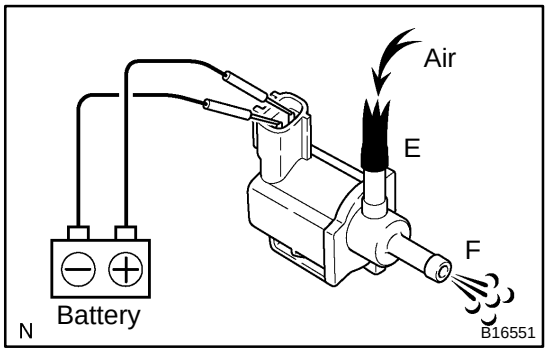

(2) Apply battery positive voltage across the terminals.

(3) Check that air flows from ports E to F.

If operation is not as specified, replace the VSV.

3. REINSTALL VSV

(a) Install the VSV with the bolt.

(b) Connect the 2 EVAP hoses.

(c) Connect the VSV connector.

VSV FOR CANISTER CLOSED VALVE (CCV)

COMPONENTS

SF1TW–01

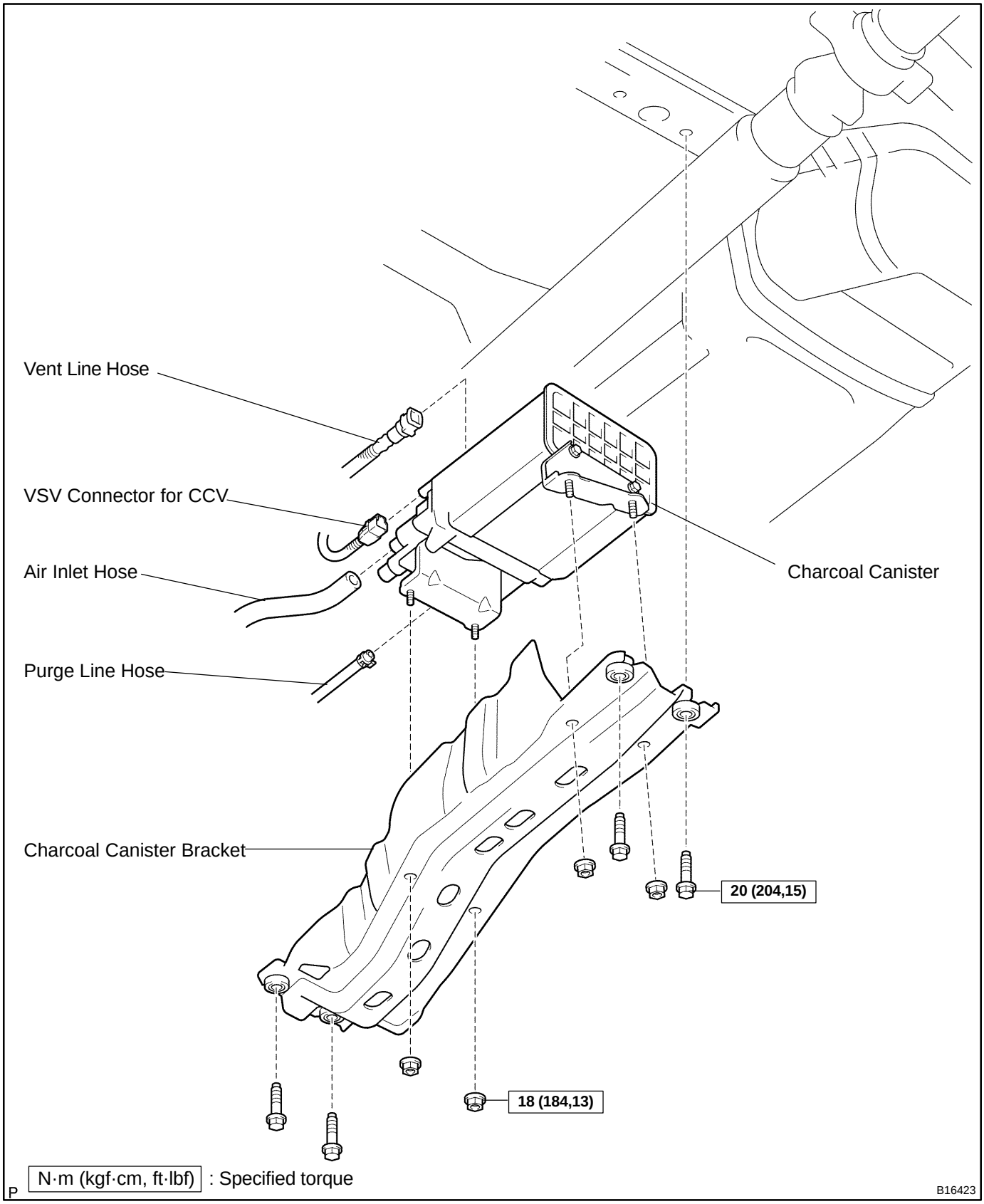

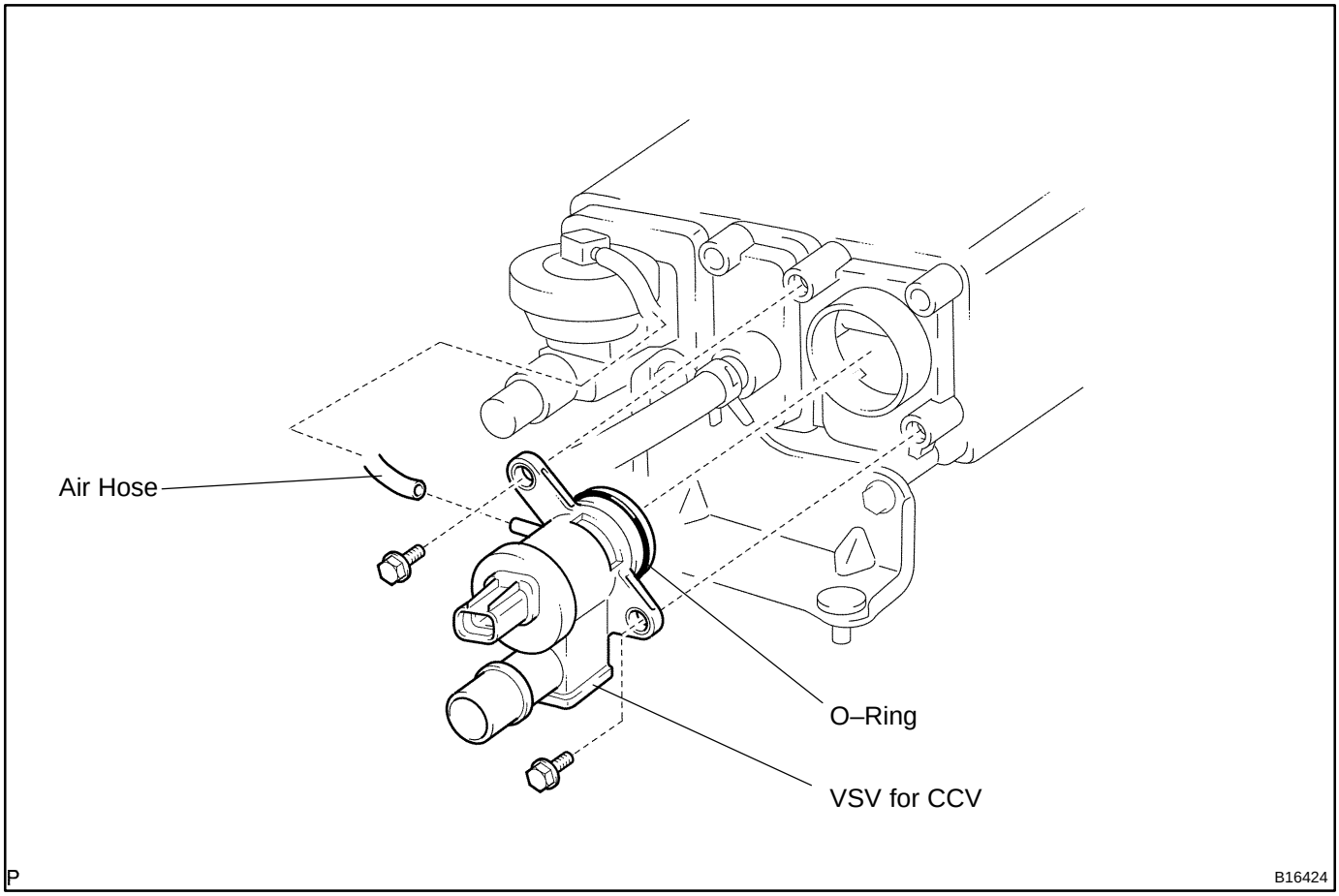
Air Hose
O–Ring
VSV for CCV
P
B16424

SF1TX–01

INSPECTION

1. REMOVE VSV

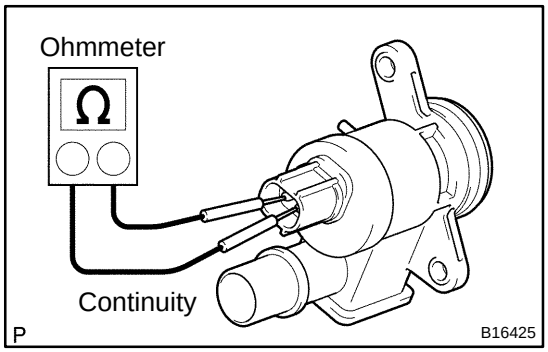

2. INSPECT VSV FOR OPEN CIRCUIT

Using an ohmmeter, check that there is continuity between the terminals.

Resistance:

20˚C (68˚F)	25 – 30 Ω
100˚C (212˚F)	32 – 42 Ω

If there is no continuity, replace the VSV.

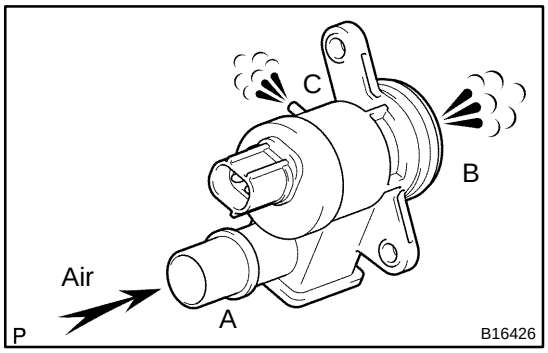

3. INSPECT VSV OPERATION

(a) Check that air flows from ports A to B and C.

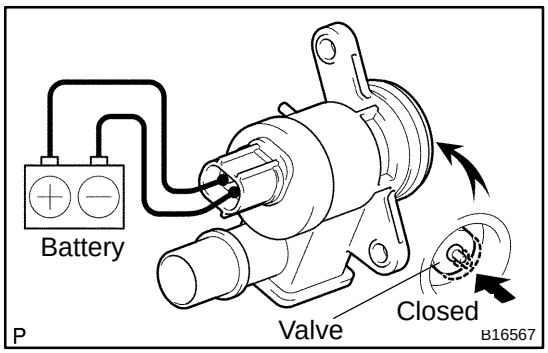

(b) Apply battery positive voltage across the terminals.

(c) Check that the valve is closed.

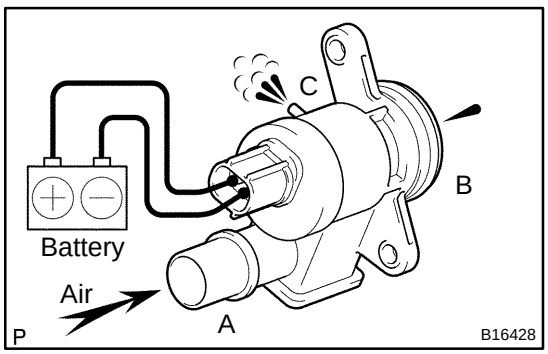

(d) Check that air does not flow from ports A to B.

(e) Check that air flows from ports A to C.

If operation is not as specified, replace the VSV.

4. REINSTALL VSV

ENGINE COOLANT TEMPERATURE (ECT) SENSOR

SF0CR–02

COMPONENTS

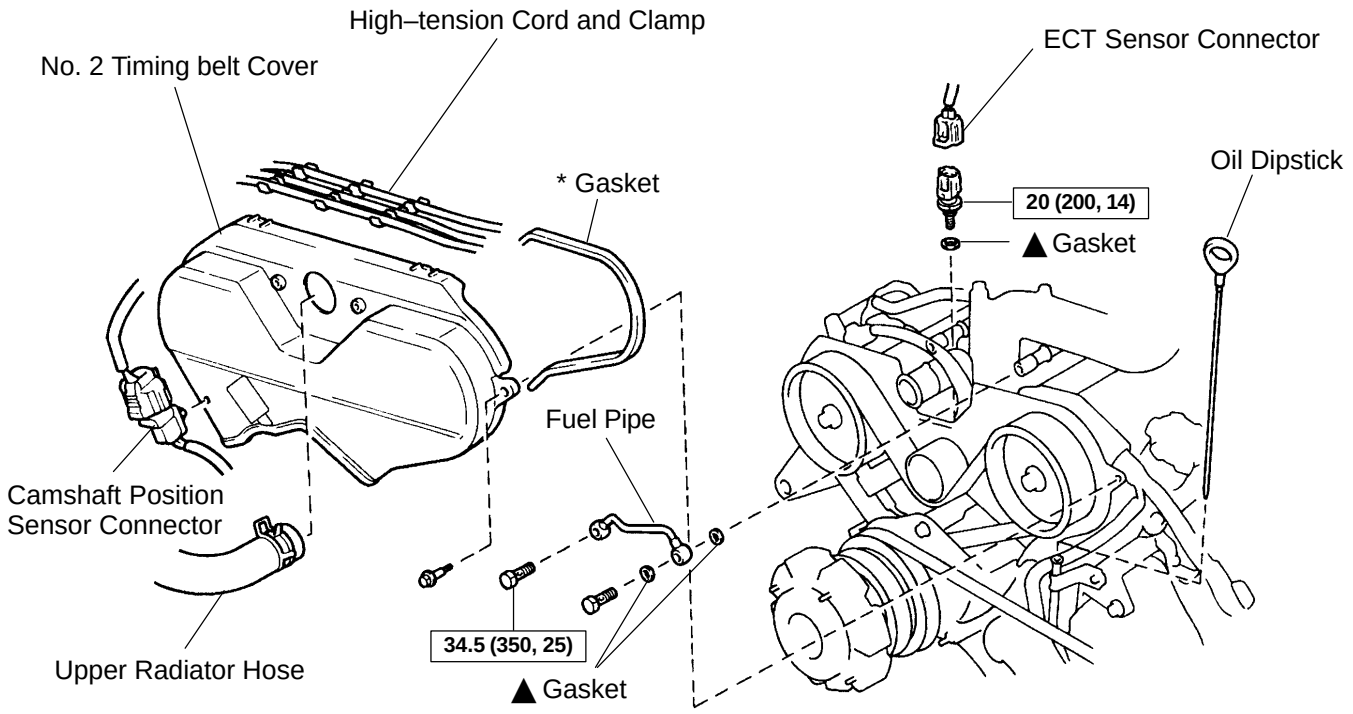

N·m (kgf·cm, ft·lbf) : Specified torque
▲ Non–reusable part
* Replace only if damaged

B06850

SF0CS–02

INSPECTION

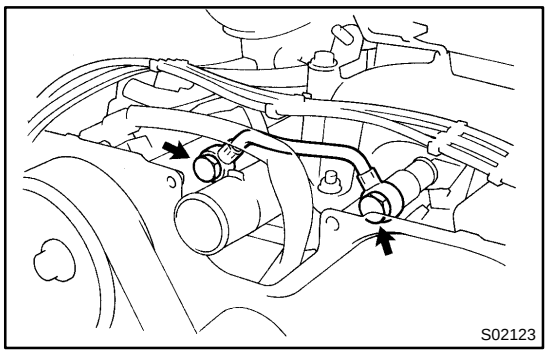

1. **REMOVE NO. 2 TIMING BELT COVER (See page EM–14)**
2. **REMOVE FUEL PIPE**

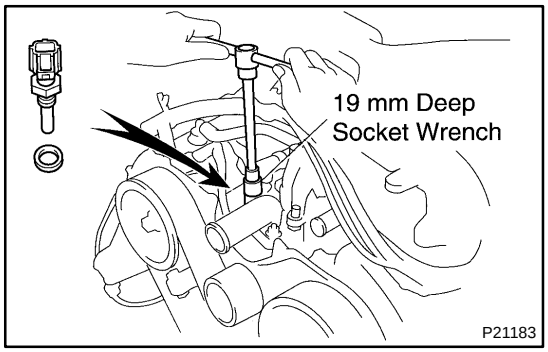

3. **REMOVE ECT SENSOR**

(a) Disconnect the sensor connector.

(b) Using a 19 mm deep socket wrench, remove the sensor and gasket.

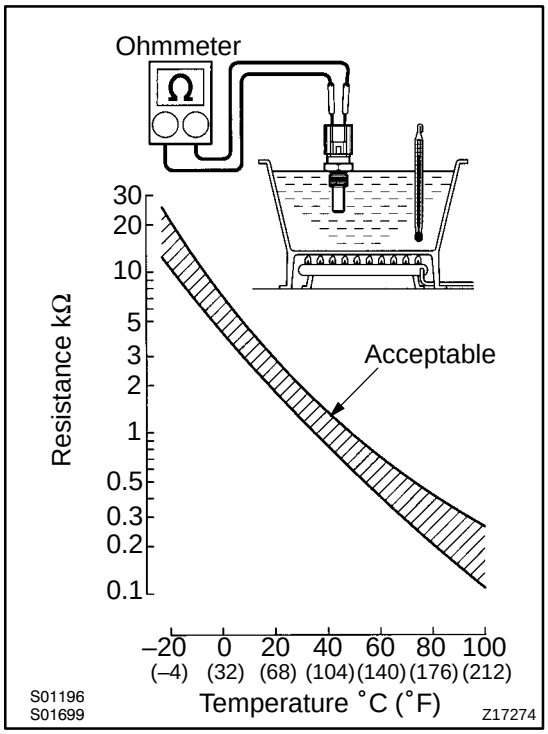

4. **INSPECT ECT SENSOR**

Using an ohmmeter, measure the resistance between the terminals.

Resistance: Refer to the graph

If the resistance is not as specified, replace the sensor.

5. **REINSTALL ECT SENSOR**

(a) Install a new gasket to the sensor.

(b) Using a 19 mm deep socket, install the sensor.

Torque: 19.6 N·m (200 kgf·cm, 14 ft·lbf)

(c) Connect the sensor connector.

6. **REINSTALL FUEL PIPE**

Install the fuel pipe with 4 new gaskets and the 2 union bolts.

Torque: 34.3 N·m (350 kgf·cm, 25 ft·lbf)

7. **REINSTALL NO. 2 TIMING BELT COVER (See page EM–20)**

VAPOR PRESSURE SENSOR

SF0PP–09

COMPONENTS

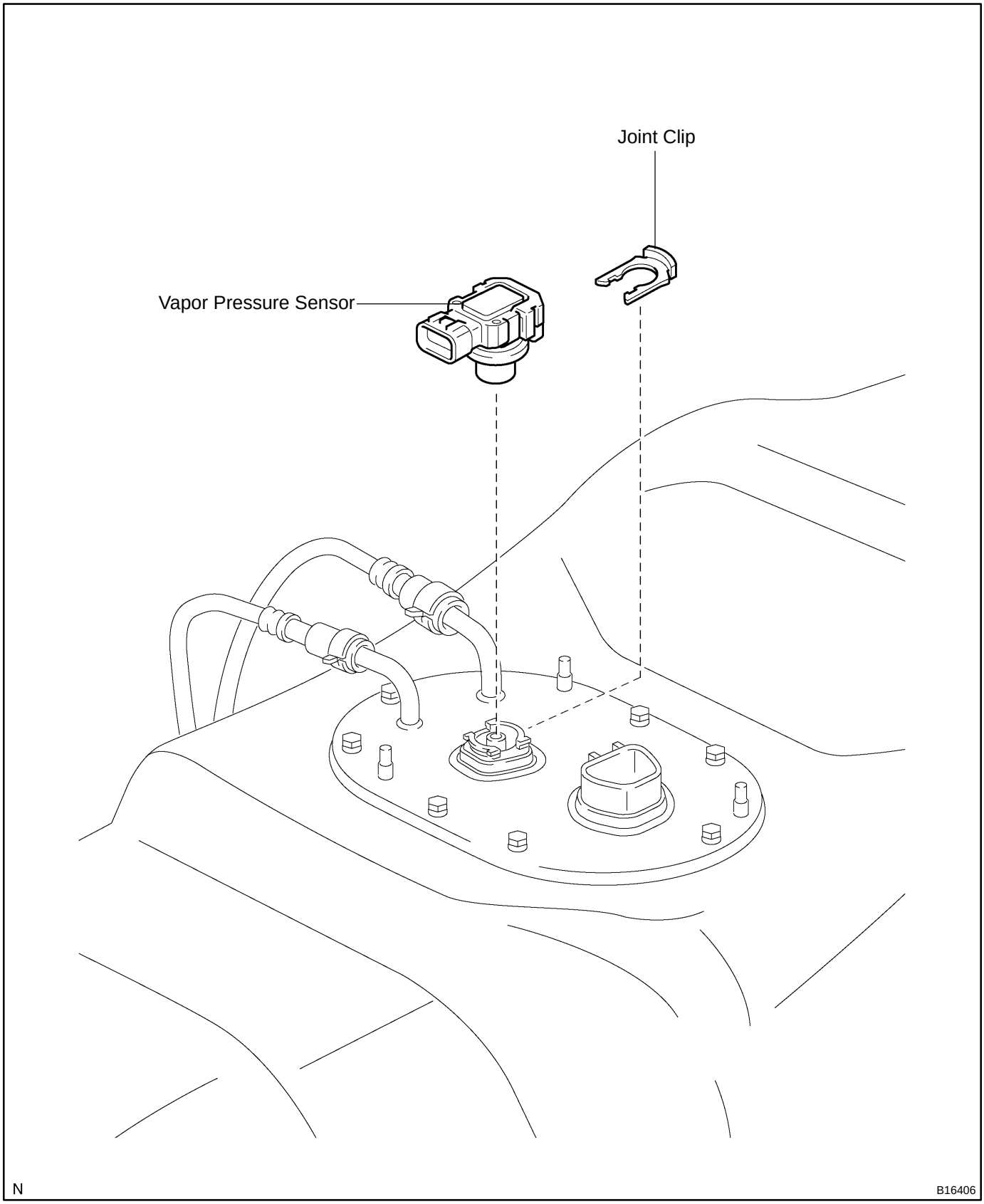

SF1UD–01

INSPECTION

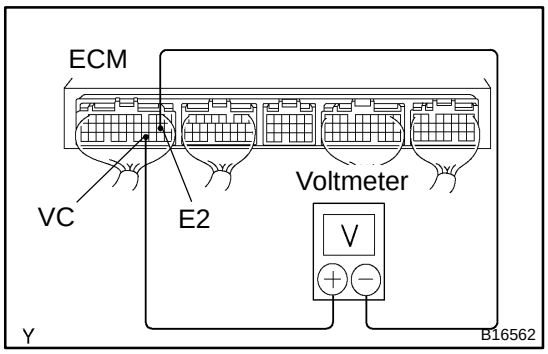

1. INSPECT POWER SOURCE VOLTAGE OF VAPOR PRESSURE SENSOR

(a) Turn the ignition switch ON.

(b) Using a voltmeter, measure the voltage between connector terminals VC and E2 of the wiring harness side.
Voltage: 4.5 – 5.5 V

(c) Turn the ignition switch OFF.

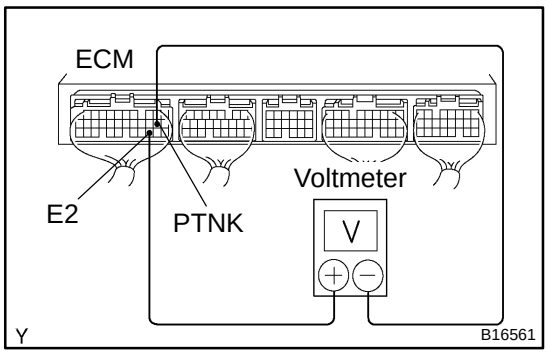

2. INSPECT POWER OUTPUT OF VAPOR PRESSURE SENSOR

(a) Turn the ignition switch ON.

(b) Remove the fuel tank cap.

(c) Connect a voltmeter to terminals 2 and 3, and measure the output voltage.
Voltage: 3.0 – 3.6 V

(d) Reinstall the fuel tank cap.

SF1UF–01

REPLACEMENT

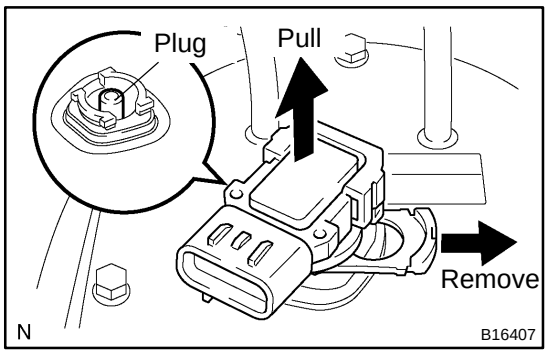

1. REMOVE FUEL TANK (See page SF–24)

2. REMOVE VAPOR PRESSURE SENSOR

(a) Slightly turn the sensor.

(b) Remove the joint clip.

(c) Pull out the sensor.

(d) Plug the port of the fuel suction plate with a clean rubber cap.

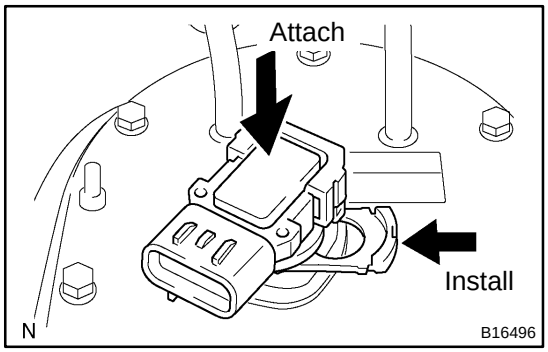

3. REINSTALL VAPOR PRESSURE SENSOR

(a) Attach the sensor to the port of the fuel suction plate.

(b) Install the joint clip.

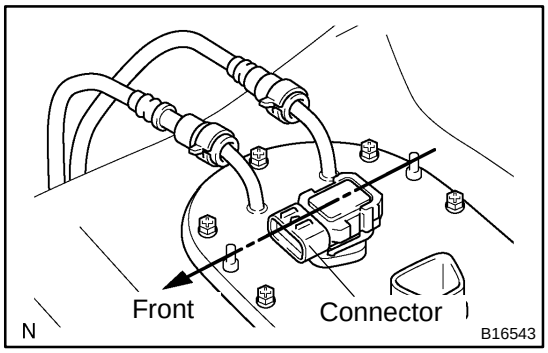

(c) Turn the sensor, and face the sensor connector forward.

4. REINSTALL FUEL TANK (See page SF–24)

KNOCK SENSOR

COMPONENTS

SF13L–03

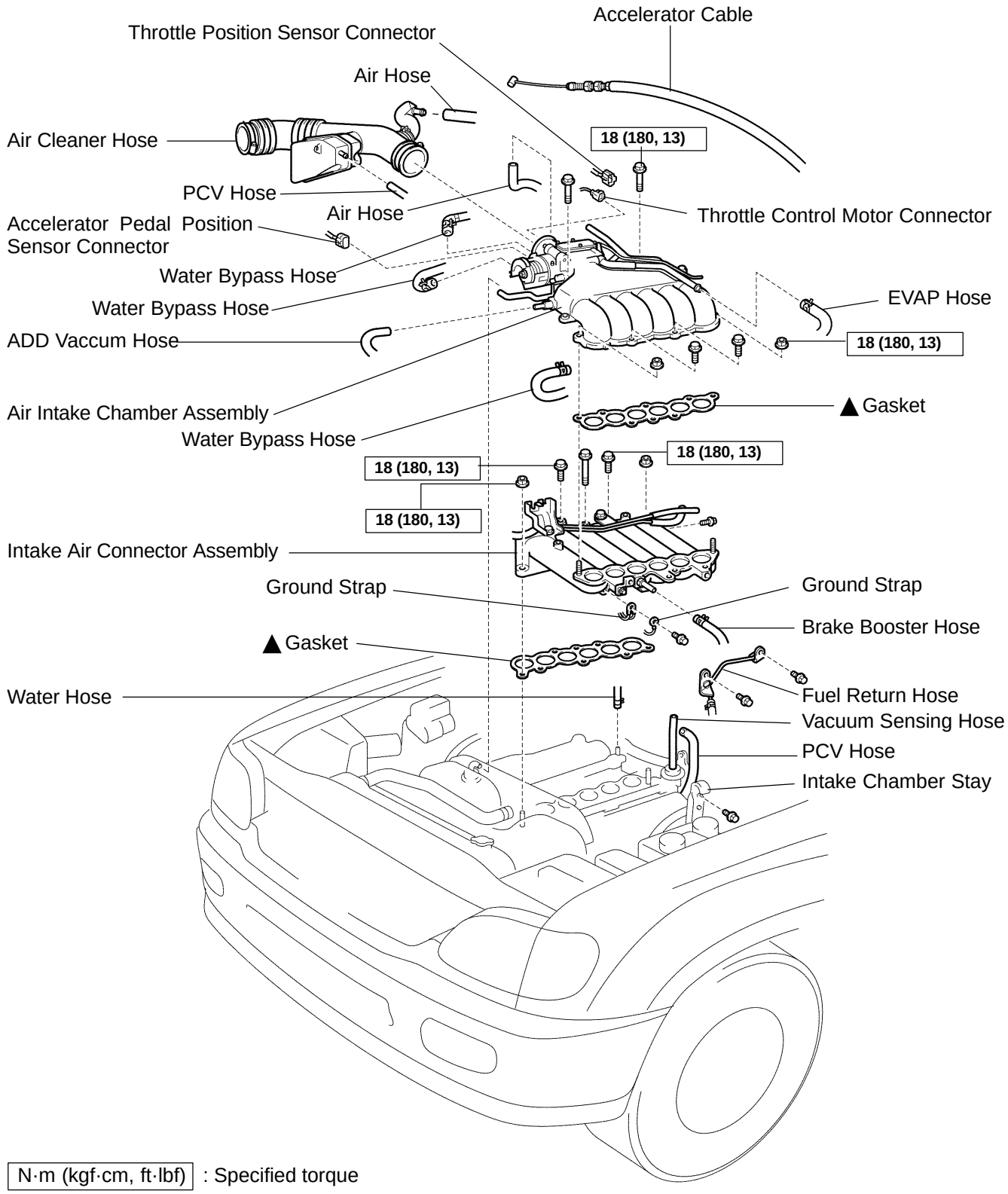

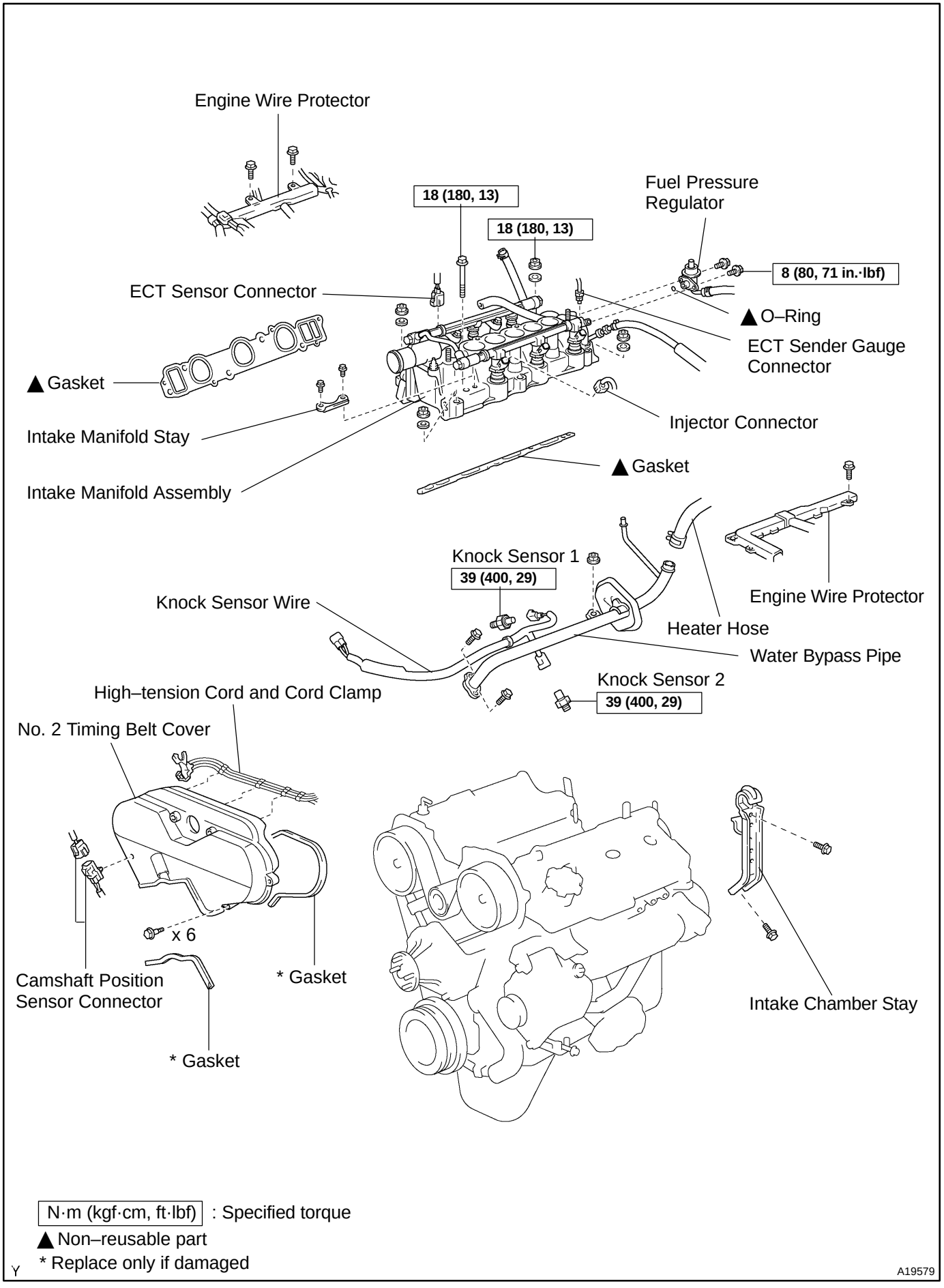
Engine Wire Protector
18 (180, 13)
18 (180, 13)
Fuel Pressure Regulator
8 (80, 71 in.·lbf)
ECT Sensor Connector
▲O–Ring
ECT Sender Gauge Connector
▲Gasket
Injector Connector
Intake Manifold Stay
▲Gasket
Intake Manifold Assembly
Knock Sensor 1
39 (400, 29)
Engine Wire Protector
Knock Sensor Wire
Heater Hose
Water Bypass Pipe
Knock Sensor 2
39 (400, 29)
High–tension Cord and Cord Clamp
No. 2 Timing Belt Cover
x 6
Camshaft Position Sensor Connector
* Gasket
* Gasket
Intake Chamber Stay
N·m (kgf·cm, ft·lbf) : Specified torque
▲Non–reusable part
* Replace only if damaged
A19579

SF0CV–05

INSPECTION

1. DRAIN ENGINE COOLANT
2. REMOVE AIR CLEANER HOSE
3. REMOVE NO. 2 TIMING BELT COVER (See page EM–14)
4. REMOVE INTAKE AIR CONNECTOR (See page EM–31)
5. REMOVE FUEL PRESSURE REGULATOR (See page SF–16)
6. REMOVE INTAKE MANIFOLD ASSEMBLY (See page EM–31)
7. REMOVE WATER BYPASS PIPE AND KNOCK SENSOR WIRE (See page EM–79)

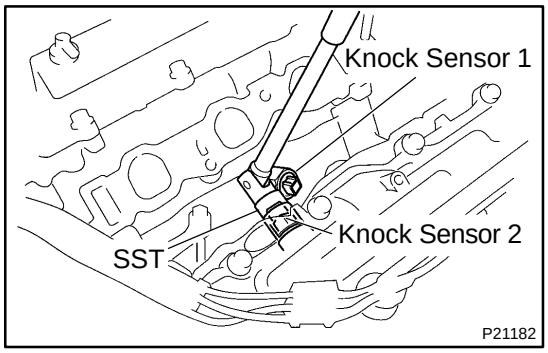

8. REMOVE KNOCK SENSORS

Using SST, remove the knock sensor.

SST 09817–16011

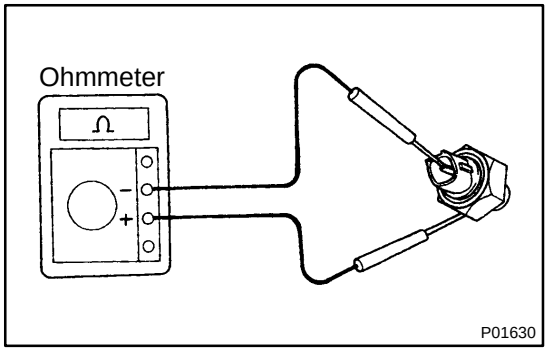

9. INSPECT KNOCK SENSORS

Using an ohmmeter, check that there is no continuity between the terminal and body.

If there is continuity, replace the sensor.

10. INSTALL KNOCK SENSORS

Using SST, install the knock sensor.

SST 09817–16011

Torque: 39 N·m (400 kgf·cm, 29 ft·lbf)

11. REINSTALL WATER BYPASS PIPE AND KNOCK SENSOR WIRE (See page CO–6)
12. REINSTALL INTAKE MANIFOLD ASSEMBLY (See page EM–51)
13. REINSTALL FUEL PRESSURE REGULATOR (See page SF–16)
14. REINSTALL INTAKE AIR CONNECTOR (See page EM–51)
15. REINSTALL NO. 2 TIMING BELT COVER (See page EM–20)
16. REINSTALL AIR CLEANER HOSE
17. REFILL WITH ENGINE COOLANT

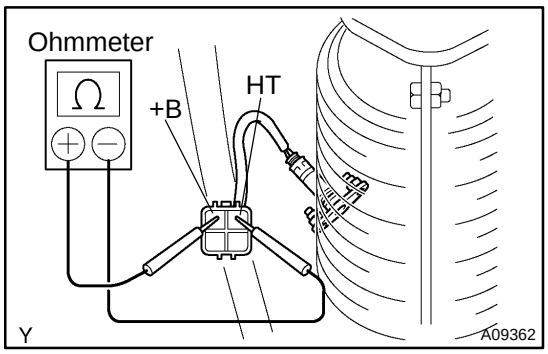

AIR–FUEL RATIO (A/F) SENSOR

SF1MX–03

INSPECTION

1. INSPECT HEATER RESISTANCE OF A/F SENSOR (Bank 1 Sensor 1)

(a) Disconnect the sensor connector.

(b) Using an ohmmeter, measure the resistance between terminals +B and HT.

Resistance:

20˚C (68˚F)	0.8 – 1.4 Ω
800˚C (1,472˚F)	1.8 – 3.2 Ω

If the resistance is not as specified, replace the sensor.

Torque: 20 N·m (200 kgf·cm, 14 ft·lbf)

(c) Reconnect the sensor connector.

2. INSPECT OPERATION OF A/F SENSOR (See page DI–167)

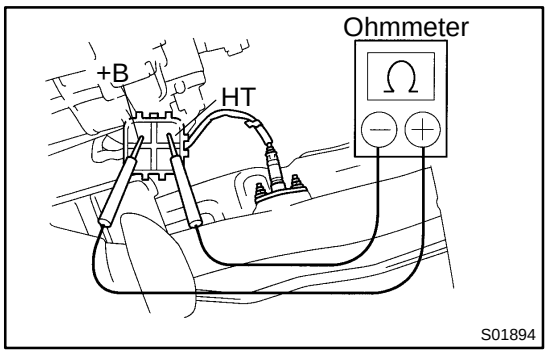

HEATED OXYGEN SENSOR

SF0CW–05

INSPECTION

1. INSPECT HEATER RESISTANCE OF HEATED OXYGEN SENSOR (Bank 1 Sensor 2)

(a) Disconnect the sensor connector.

(b) Using an ohmmeter, measure the resistance between the terminals +B and HT.

Resistance:

20˚C (68˚F)	11 – 16 Ω
800˚C (1,472˚F)	23 – 32 Ω

If the resistance is not as specified, replace the sensor.

Torque: 20 N·m (200 kgf·cm, 14 ft·lbf)

(c) Reconnect the sensor connector.

2. INSPECT OPERATION OF HEATED OXYGEN SENSOR (See page DI–60)

ENGINE CONTROL MODULE (ECM)

COMPONENTS

SF0CX–03

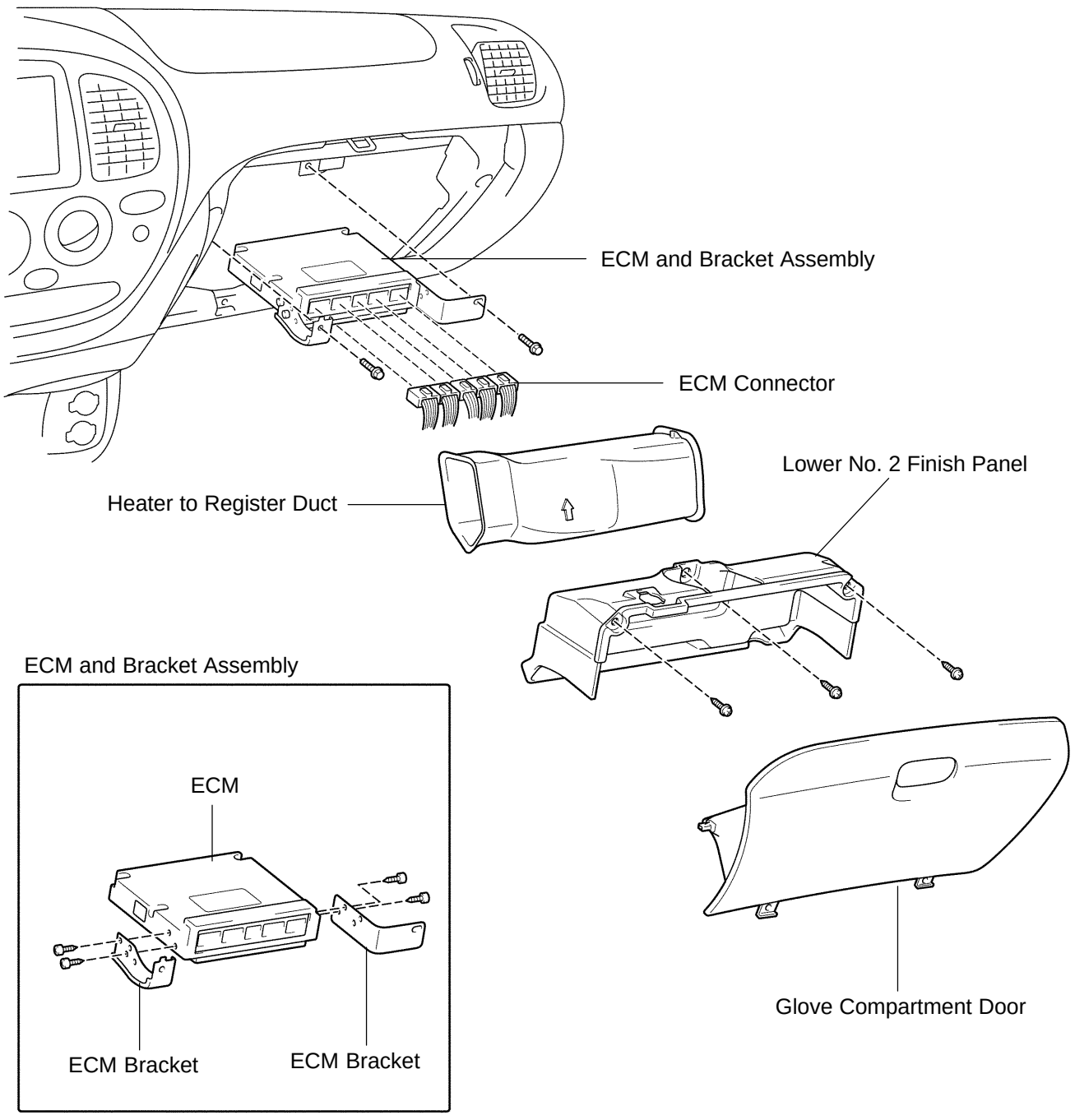

SF0CY–04

INSPECTION

INSPECT ECM (See page DI–21)

FUEL CUT RPM

SF0CZ–02

INSPECTION

1. WARM UP ENGINE

Allow the engine to warm up to normal operating temperature.

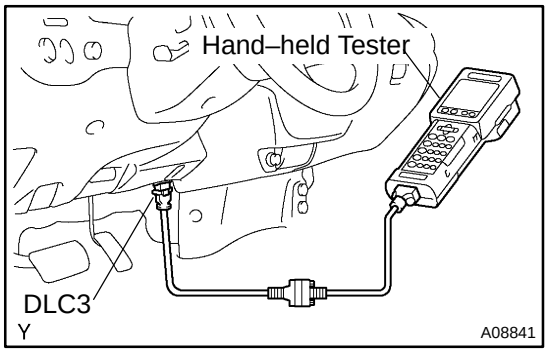

2. CONNECT HAND–HELD TESTER OR OBD II SCAN TOOL

(a) Connect the hand–held tester or OBD II scan tool to the DLC3.

(b) Please refer to the hand–held tester or OBD II scan tool operator's manual for further details.

3. INSPECT FUEL CUT OFF PRM

(a) Increase the engine speed to at least 3,500 rpm.

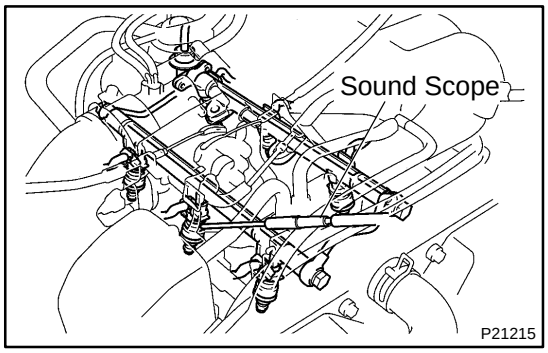

(b) Use a sound scope to check for injector operating noise.

(c) Check that when the throttle lever is released, injector operation noise stops momentarily and then resumes.

HINT:

Measure with the A/C OFF.

Fuel return rpm:

M/T	1,000 rpm
A/T	1,200 rpm

4. DISCONNECT HAND–HELD TESTER OR OBD II SCAN TOOL

SFI SYSTEM

SF1U0–01

PRECAUTION

HINT:

Any DTC retained by the computer will be erased when the negative (–) terminal cable is removed from the battery. Therefore, if necessary, read the diagnosis before removing the negative (–) terminal cable from the battery.

1. BEFORE WORKING ON FUEL SYSTEM, DISCONNECT NEGATIVE (–) TERMINAL CABLE FROM BATTERY

2. DO NOT SMOKE OR WORK NEAR AN OPEN FLAME WHEN WORKING ON THE FUEL SYSTEM

3. KEEP GASOLINE AWAY FROM RUBBER OR LEATHER PARTS

4. MAINTENANCE PRECAUTIONS

(a) In the event of engine misfire, these precautions should be taken.
  (1) Check proper connection to battery terminals, etc.
  (2) After repair work, check that the ignition coil terminals and all other ignition system lines are reconnected securely.
  (3) When cleaning the engine compartment, be especially careful to protect the electrical system from water.

(b) Precautions when handling the oxygen sensor.
  (1) Do not allow oxygen sensor to drop or hit against an object.
  (2) Do not allow the sensor to come into contact with water.

5. IF VEHICLE IS EQUIPPED WITH MOBILE RADIO SYSTEM (HAM, CB, ETC.)

If the vehicle is equipped with a mobile communication system, refer to the precaution in the IN section.

6. AIR INDUCTION SYSTEM

(a) Separation of the engine oil dipstick, oil filler cap, PCV hose, etc. may cause the engine to run out of tune.

(b) Disconnection, looseness or cracks in the parts of the air induction system between the throttle body and cylinder head will allow air suction and cause the engine to run out of tune.

7. ELECTRONIC CONTROL SYSTEM

(a) Before removing SFI wiring connectors, terminals, etc., first disconnect the power by either turning the ignition switch OFF or disconnecting the negative (–) terminal cable from the battery.

HINT:

Always check the diagnostic trouble code before disconnecting the negative (–) terminal cable from the battery.

(b) When installing the battery, be especially careful not to incorrectly connect the positive (+) and negative (–) cables.
(c) Do not permit parts to receive a severe impact during removal or installation. Handle all SFI parts carefully, especially the ECM.
(d) Be careful during troubleshooting as there are numerous transistor circuits, and even slight terminal contact can cause further troubles.
(e) Do not open the ECM cover.
(f) When inspecting in rainy weather, take care to prevent an intrusion of water. Also, when washing the engine compartment, prevent water from getting on the SFI parts and wiring connectors.
(g) Parts should be replaced as an assembly.
(h) Care should be taken when pulling out and inserting wiring connectors.
  (1) Release the lock and pull out the connector, pulling on the connectors.
  (2) Fully insert the connector and check that it is locked.

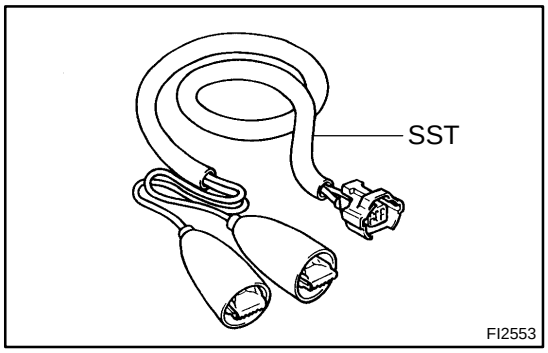

(i) Use SST for inspection or test of the injector or its wiring connector.
SST 09842–30070

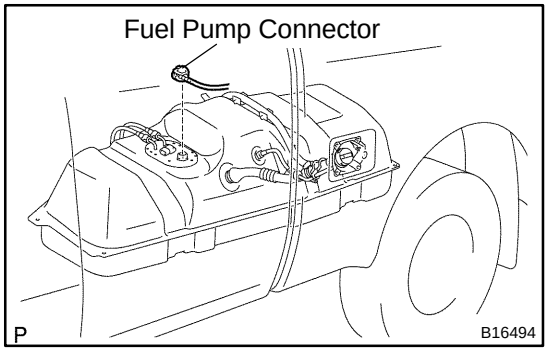

8. FUEL SYSTEM

(a) When disconnecting the high fuel pressure line, a large amount of gasoline will spill out, so observe these procedures:
  (1) Disconnect the fuel pump connector.
  (2) Start the engine. After the engine has stopped on its own, turn the ignition switch OFF.

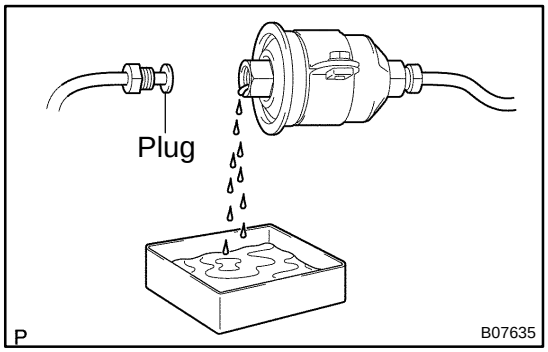

  (3) Put a container under the connection.
  (4) Slowly loosen the connection.
  (5) Disconnect the connection.
  (6) Plug the connection with a rubber plug.
  (7) Reconnect the fuel pump connector.

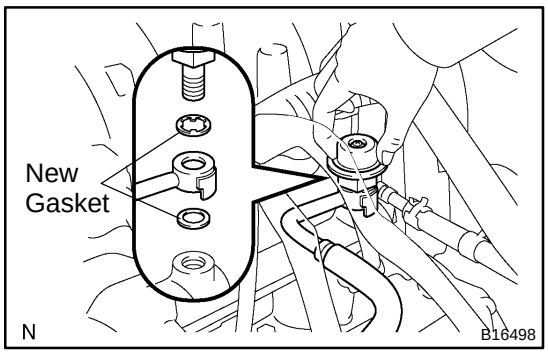

(b) When connecting the union bolt (fuel pressure pulsation damper) on the high pressure pipe union, observe these procedures:
(1) Always use 2 new gaskets.
(2) Tighten the union bolt by hand.

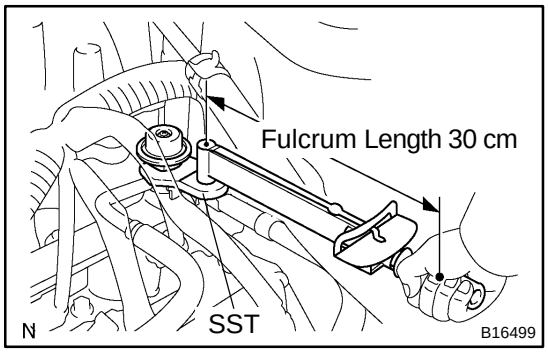

(3) Using SST, tighten the union bolt to the specified torque.
SST 09612–24014 (09617–24011)
Torque:
33 N·m (340 kgf·cm, 24 ft·lbf) for use with SST
39 N·m (400 kgf·cm, 29 ft·lbf)
HINT:
Use a torque wrench with a fulcrum length of 30 cm (11.81 in.).

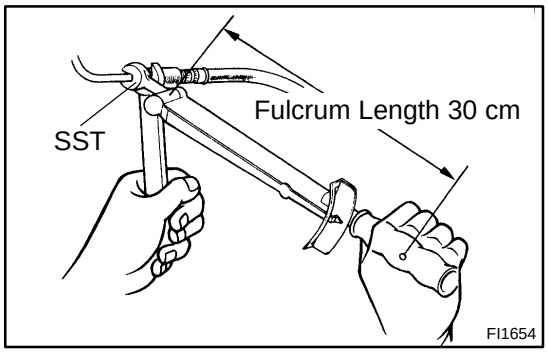

(c) When connecting the flare nut on the high pressure pipe union, observe these procedures:
(1) Apply a light coat of engine oil to the flare nut, and tighten the flare nut by hand.
(2) Using SST, tighten the flare nut to the specified torque.
SST 09023–38400
NOTICE:
Do not rotate the fuel filter outlet, when tightening the flare nut.
Torque:
28 N·m (285 kgf·cm, 21 ft·lbf) for use with SST
34.3 N·m (350 kgf·cm, 25 ft·lbf)
HINT:
Use a torque wrench with a fulcrum length of 30 cm (11.81 in.).

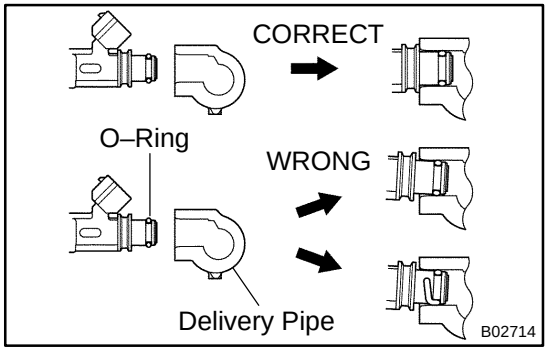

(d) Observe these precautions when removing and installing the injectors.
(1) Never reuse the O–ring.
(2) When placing a new O–ring on the injector, take care not to damage it in any way.
(3) Coat a new O–ring with spindle oil or gasoline before installing–never use engine, gear or brake oil.

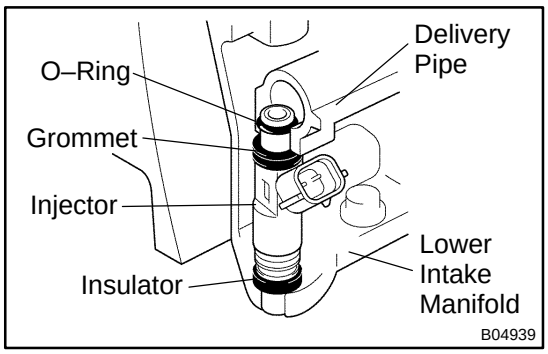

(e) Install the injector to the delivery pipe and lower intake manifold as shown in the illustration.
Before installing the injector, must apply spindle oil or gasoline on the place where a delivery pipe or an intake manifold touches an O–ring of the injector.

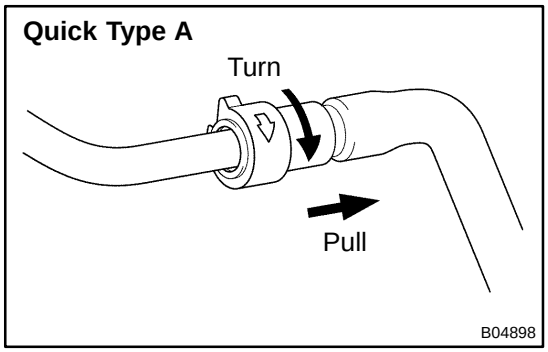

(f) Quick Type A:
Observe these precautions when disconnecting the fuel tube connector:
(1) Check that there is any dirt or the like on the pipe and around the connector before disconnecting them and clean the dirt away.
(2) Be sure to disconnect by hands.
(3) When the connector and the pipe are stuck, turn and pull the connector to free to disconnect and pull it out. Do not use any tools at this time.
(4) Inspect if there is any dirt or the like on the seal surface of the disconnected pipe and clean it away.
(5) Prevent the disconnected pipe and connector from being damaged or mixed with foreign objects by covering them with a vinyl bag.

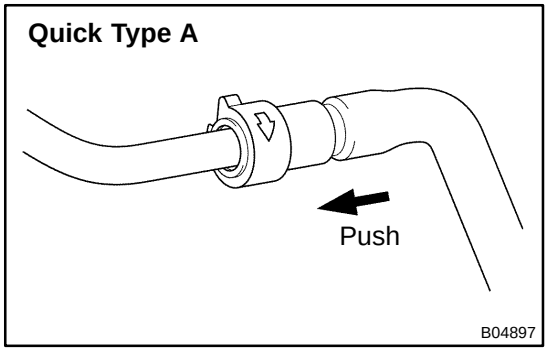

(g) Quick Type A:
Observe these precautions when connecting the fuel tube connector:
(1) Do not reuse the retainer removed from the pipe.
(2) Must use hands to remove the retainer from the pipe.
(3) Check that there is any damage or foreign objects on the connected part of the pipe.
(4) Match the axis of the connector with axis of the pipe, and push in the connector until the connector makes a ”click” sound. In case that the connections is tight, apply small amount of fresh engine oil on the tip of the pipe.

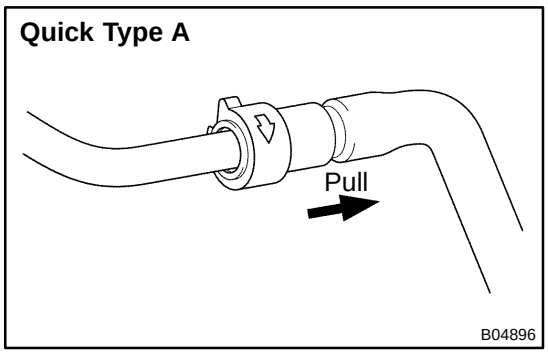

(5) After having finished the connection, check if the pipe and the connector are securely connected by pulling them.
(6) Check if there is any fuel leakage.

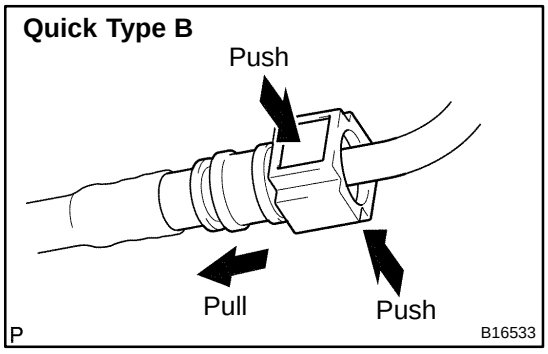

(h) Quick Type B:
Observe these precautions when disconnecting the fuel tube connector:
(1) Check that there is any dirt like mud in the pipe and around the connector before disconnecting them and clean the dirt away.
(2) Be sure to disconnect them with hands.
(3) When the connector and the pipe are stuck, push and pull the connector to free them. And then disconnect and pull it out. Do not use any tools at this time.
(4) Inspect if there is any dirt or the likes on the seal surface of the disconnected pipe and clean it away.
(5) Prevent the disconnected pipe and connector from being damaged and foreign objects mixing in by covering them with a vinyl bag.

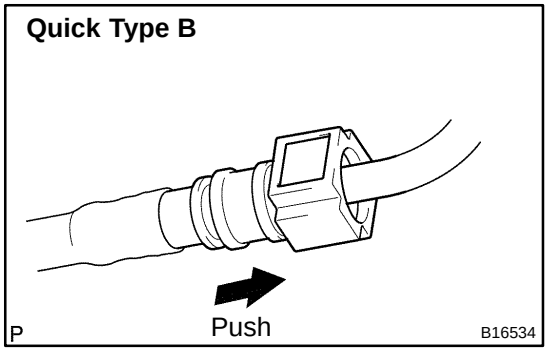

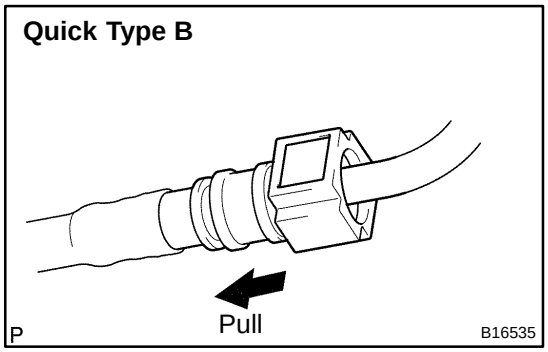

(i) Quick Type B:
Observe these precautions when connecting the fuel tube connector:
(1) Check that there is any damage or foreign objects in the connected part of the pipe.
(2) Match the axis of the connector with the axis of the pipe, and push into the connector until the connector makes a ”click” sound. In case that the connection is tight, apply little amount of fresh engine oil on the tip of the pipe.
(3) After having finished the connection, check if the pipe and the connector are securely connected by pulling them.
(4) Check that there is any fuel leak.

(j) Observe these precautions when handling nylon tube.
(1) Pay attention not to turn the connected part of the nylon tube and the quick connector by force when connecting them.
(2) Pay attention not to kink the nylon tube.
(3) Do not remove the EPDM protector from the outside of the nylon tube.
(4) Must not close the piping with the nylon tube by bending it.

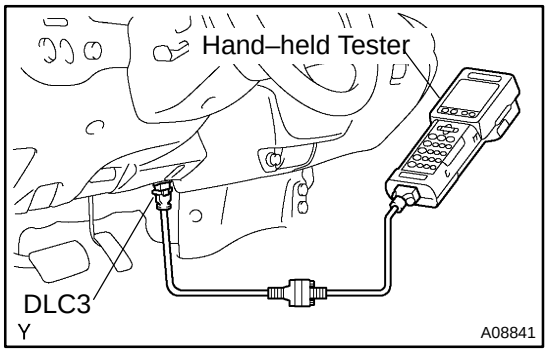

(k) Check that there is any fuel leak after maintenance anywhere on the fuel system.
(1) Connect a hand–held tester to the DLC3.
(2) Turn the ignition switch ON, and push the hand–held tester main switch ON.

NOTICE:
Do not start the engine.

(3) Select the ACTIVE TEST mode on the hand–held tester.
(4) Please refer to the hand–held tester operator's manual for further details.

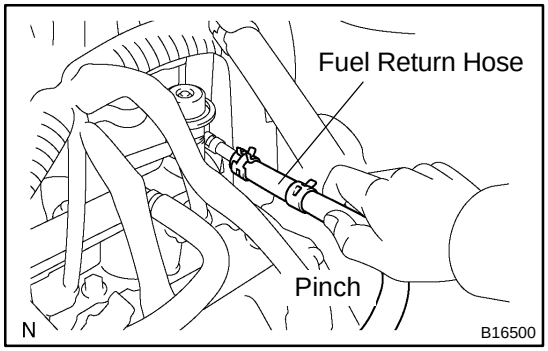

(5) Pinch the fuel return hose.
The pressure in the high pressure line will rise to approx. 392 kPa (4 kgf/cm^2, 57 psi). In this state, check to see that there are no leaks from any part of the fuel system.

NOTICE:
Always pinch the hose. Avoid bending as it may cause the hose to crack.

(6) Turn the ignition switch OFF.
(7) Disconnect the hand–held tester from the DLC3.

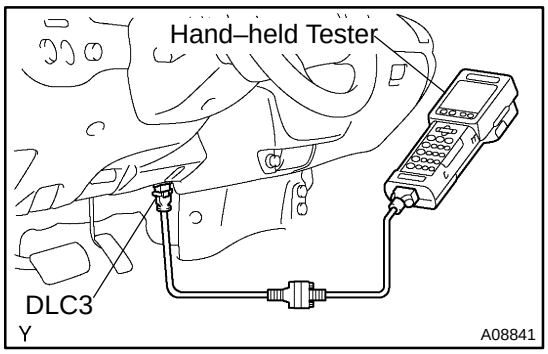

FUEL PUMP

SF12Y–04

ON–VEHICLE INSPECTION

1. CHECK FUEL PUMP OPERATION

(a) Connect a hand–held tester to the DLC3.

(b) Turn the ignition switch ON, and push the hand–held tester main switch ON.

NOTICE:

Do not start the engine.

(c) Select the ACTIVE TEST mode on the hand–held tester.

(d) Please refer to the hand–held tester operator's manual for further details.

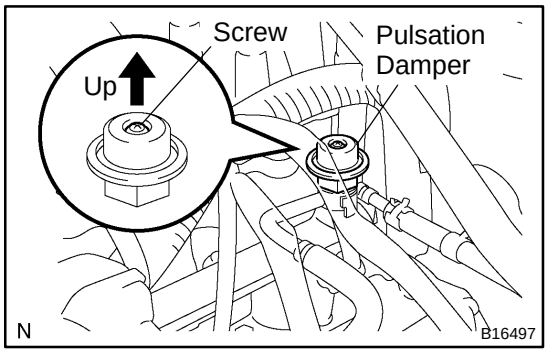

(e) Check that the pulsation damper screw rises up when the fuel pump operates.

If operation is not as specified, check the fusible link, fuses, EFI main relay, fuel pump, ECM and wiring connections.

(f) Turn the ignition switch OFF.

(g) Disconnect the hand–held tester from the DLC3.

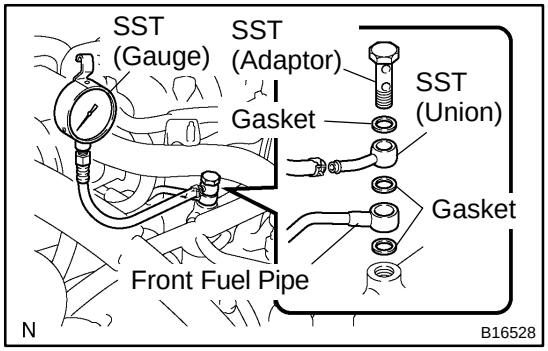

2. CHECK FUEL PRESSURE

(a) Check the battery positive voltage is above 12 V.

(b) Disconnect the negative (–) terminal cable from the battery.

(c) Remove the front fuel pipe from the LH delivery pipe (See page SF–19).

(d) Install the front fuel pipe and SST (pressure gauge) to the delivery pipe with 3 lower gaskets and SST (adaptor).

SST 09268–45014 (09268–41190, 90405–06167)

Torque: 39 N·m (400 kgf·cm, 29 ft·lbf)

(e) Wipe off any splattered gasoline.

(f) Reconnect the negative (–) terminal cable to the battery.

(g) Connect a hand–held tester to the DLC3 (See step 1 in check fuel pump operation (a) to (e)).

(h) Measure the fuel pressure.

Fuel pressure:

265 – 304 kPa (2.7 – 3.1 kgf/cm^2, 38 – 44 psi)

If pressure is high, replace the fuel pressure regulator.

If pressure is low, check the fuel hoses and connections, fuel pump, fuel filter and fuel pressure regulator.

(i) Disconnect the hand–held tester from the DLC3.
(j) Start the engine.
(k) Measure the fuel pressure at idle.
Fuel pressure:
265 – 304 kPa (2.7 – 3.1 kgf/cm^2, 38 – 44 psi)
(l) Stop the engine.
(m) Check that the fuel pressure remains as specified for 5 minutes after the engine has stopped.
Fuel pressure: 147 kPa (1.5 kgf/cm^2, 21 psi) or more

If pressure is not as specified, check the fuel pump, pressure regulator and/or injectors.

(n) After checking fuel pressure, disconnect the negative (–) terminal cable from the battery and carefully remove the SST to prevent gasoline from splashing.
SST 09268–45014
(o) Reinstall the front fuel pipe to the LH delivery pipe (See page SF–23).
(p) Reconnect the negative (–) terminal cable to the battery.
(q) Check for fuel leaks (See page SF–1).

SF12Z–04

COMPONENTS

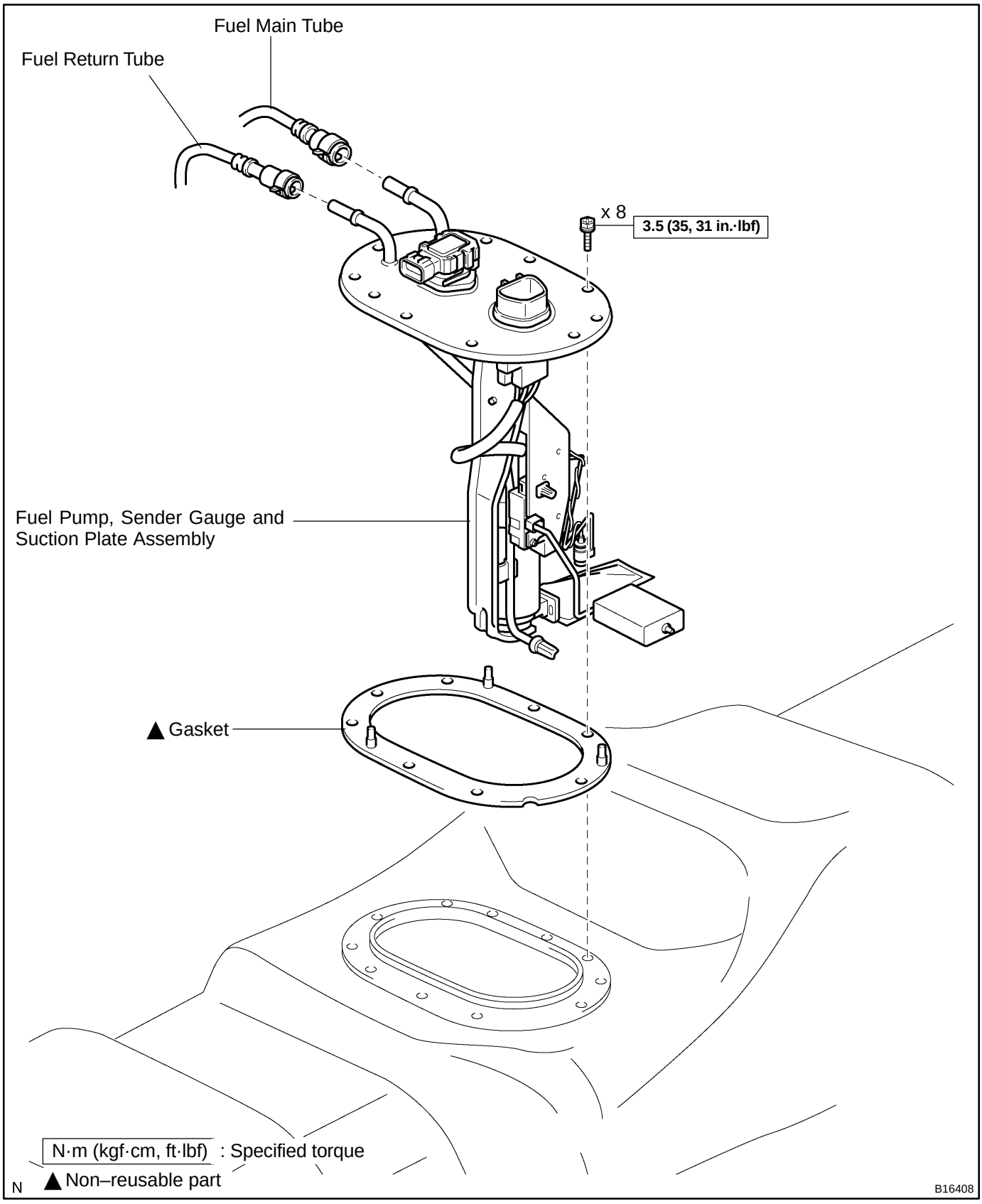

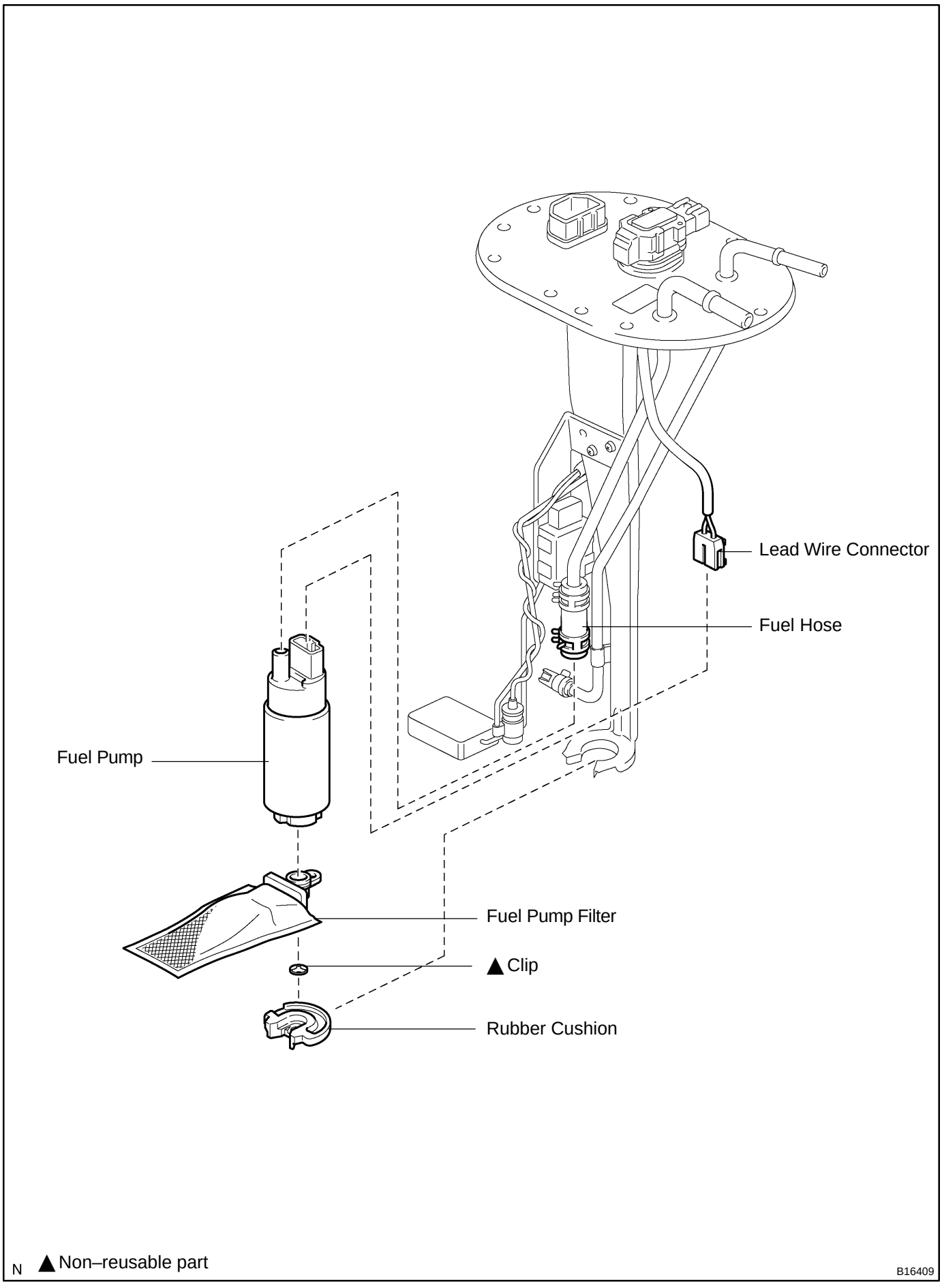
Lead Wire Connector
Fuel Hose
Fuel Pump
Fuel Pump Filter
▲Clip
Rubber Cushion
N ▲Non–reusable part
B16409

SF1UG–01

REMOVAL

CAUTION:
Do not smoke or work near an open frame when working the fuel pump.

1. **REMOVE FUEL TANK (See page SF–25)**
2. **DISCONNECT FUEL PUMP & SENDER GAUGE CONNECTOR**

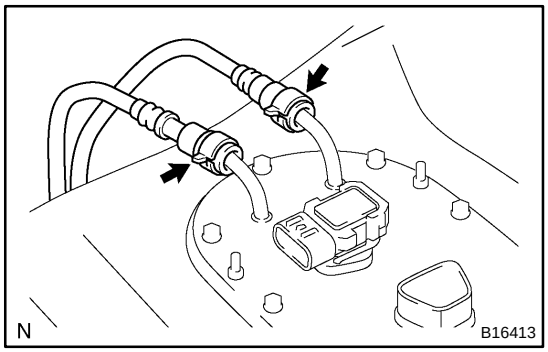

3. **DISCONNECT FUEL MAIN TUBE AND RETURN TUBE FROM SUCTION PLATE (See page SF–1)**

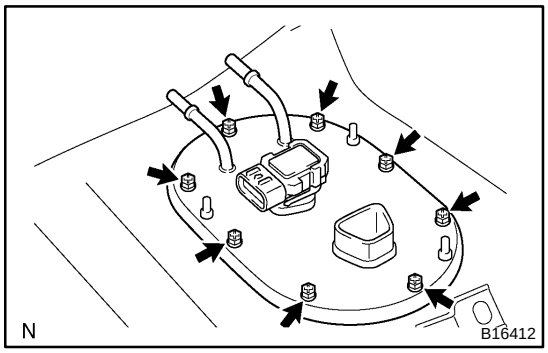

4. **REMOVE FUEL PUMP, SENDER GAUGE AND SUCTION PLATE ASSEMBLY FROM FUEL TANK**

(a) Remove the 8 bolts.
(b) Remove the fuel pump, sender gauge and suction plate assembly.

NOTICE:
- **Do not damage the fuel pump filter.**
- **Be careful not to bend the arm of the sender gauge.**

(c) Remove the gasket from the fuel suction plate.

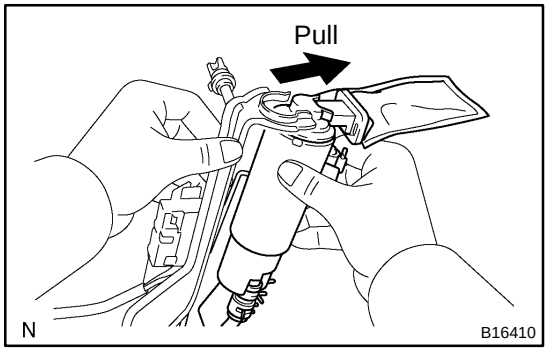

5. **REMOVE FUEL PUMP FROM SUCTION PLATE**

(a) Disconnect the lead wire connector from the fuel pump.
(b) Pull out the lower side of the fuel pump from the suction plate.
(c) Disconnect the fuel hose from the fuel pump, and remove the fuel pump.
(d) Remove the rubber cushion from the fuel pump.

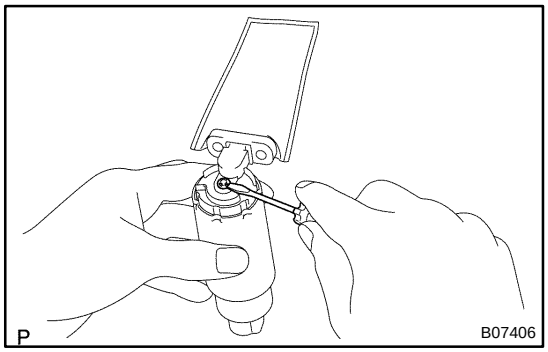

6. **REMOVE FUEL PUMP FILTER FROM FUEL PUMP**

(a) Using a small screwdriver, pry out the clip.
(b) Pull out the pump filter.

SF131–01

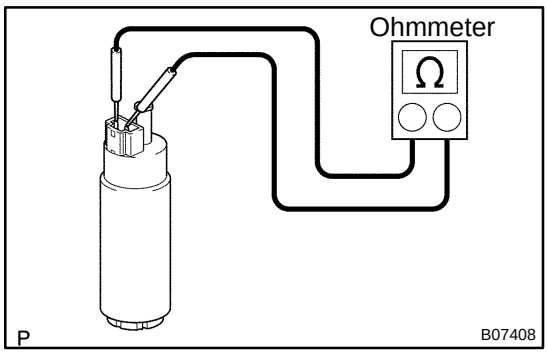

INSPECTION

1. INSPECT FUEL PUMP RESISTANCE

Using an ohmmeter, measure the resistance between the terminals.

Resistance: 0.2 – 3.0 Ω at 20˚C (68˚F)

If the resistance is not as specified, replace the fuel pump.

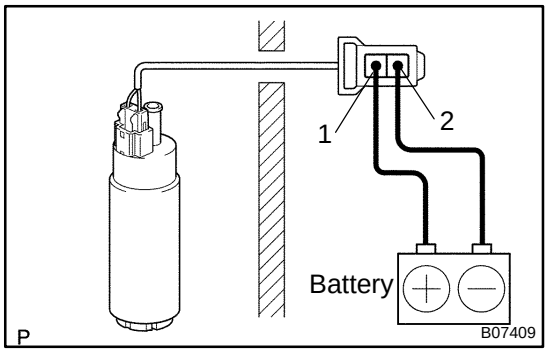

2. INSPECT FUEL PUMP OPERATION

(a) Connect the lead wire to the fuel pump.

(b) Connect the positive (+) lead from the battery to terminal 1 of the connector, and the negative (–) lead to terminal 2. Check that the fuel pump operates.

NOTICE:

- **These tests must be done quickly (within 10 seconds) to prevent the coil from burning out.**
- **Keep the fuel pump as far away from the battery as possible.**
- **Always do switching at the battery side.**

If operation is not as specified, replace the fuel pump and/or read wire.

(c) Disconnect the lead wire to the fuel pump.

SF1UH–01

INSTALLATION

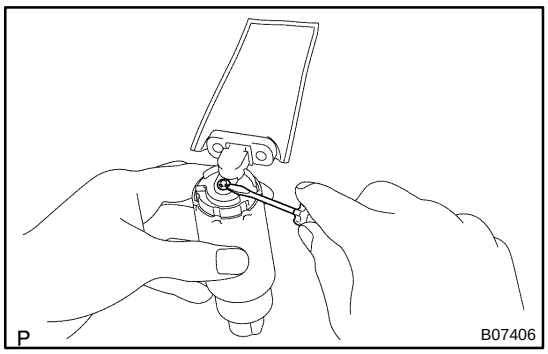

1. INSTALL FUEL PUMP FILTER TO FUEL PUMP

Using a small screwdriver, push in the clip.

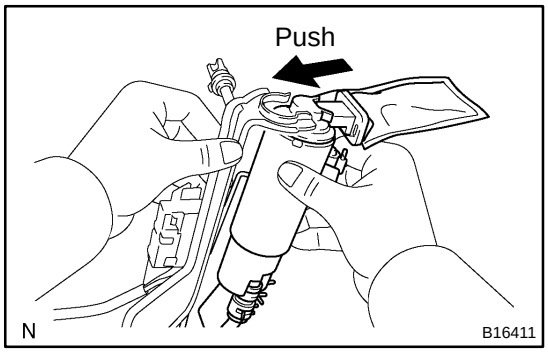

2. INSTALL FUEL PUMP TO SUCTION PLATE

(a) Install the rubber cushion to the fuel pump.
(b) Connect the fuel hose to the outlet port of the fuel pump.
(c) Install the fuel pump by pushing the lower side of the fuel pump.
(d) Connect the lead wire connector to the fuel pump.

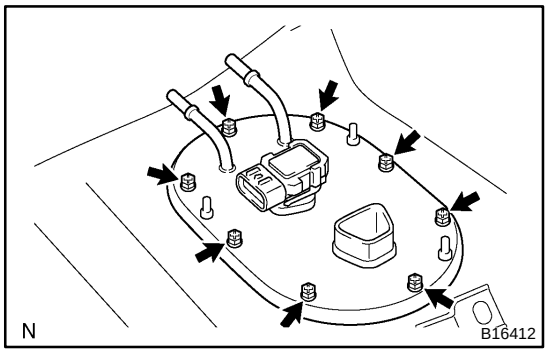

3. INSTALL FUEL PUMP, SENDER GAUGE AND SUCTION PLATE ASSEMBLY TO FUEL TANK

(a) Install a new gasket to the suction plate.
(b) Insert the fuel pump, sender gauge and suction plate assembly into the fuel tank.
(c) Install the suction plate with the 8 bolts.
Torque: 3.5 N·m (35 kgf·cm, 31 in.·lbf)

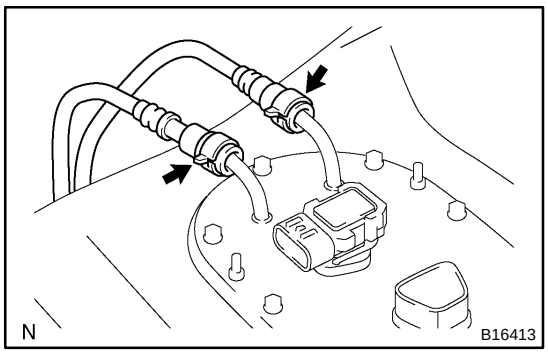

4. CONNECT FUEL MAIN TUBE AND RETURN TUBE TO SUCTION PLATE (See page SF–1)
5. CONNECT FUEL PUMP & SENDER GAUGE CONNECTOR
6. INSTALL FUEL TANK (See page SF–25)
7. CHECK FOR FUEL LEAKS (See page SF–1)

FUEL PRESSURE REGULATOR

SF0XZ–09

COMPONENTS

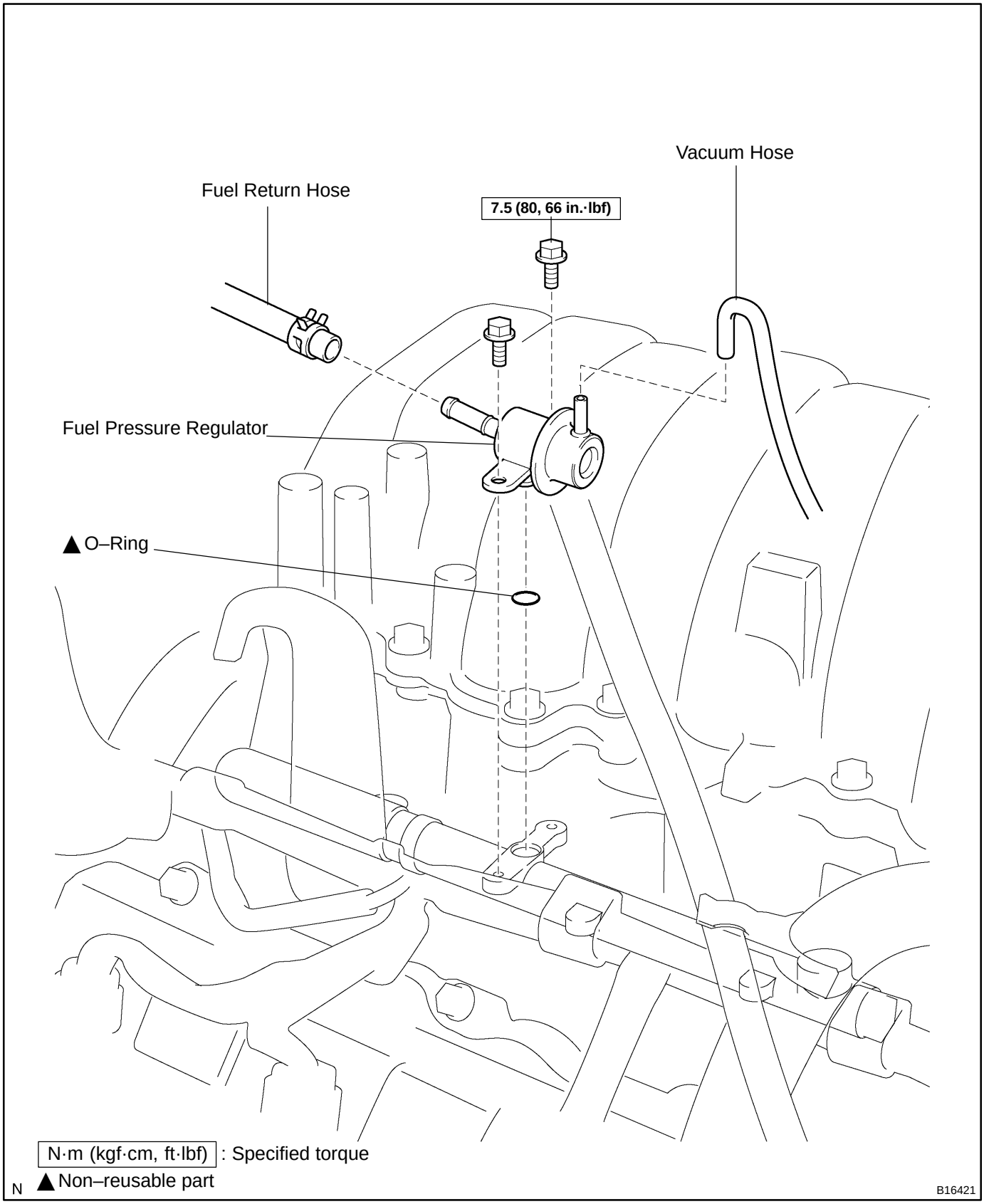

SF1TU–01

REPLACEMENT

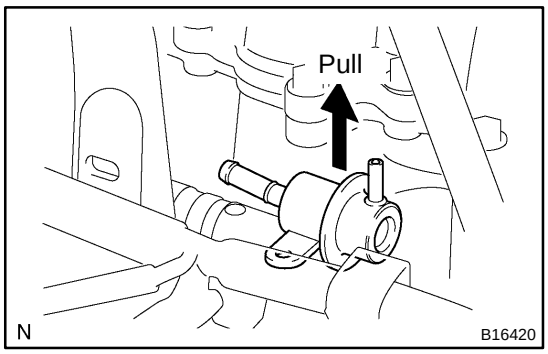

1. REMOVE FUEL PRESSURE REGULATOR

(a) Disconnect the vacuum hose from intake air resonator.

(b) Disconnect the fuel return hose from the pressure regulator.

CAUTION:

Put a shop towel under the pressure regulator.

(c) Remove the 2 bolts, and pull out the pressure regulator.

(d) Remove the O–ring from the pressure regulator.

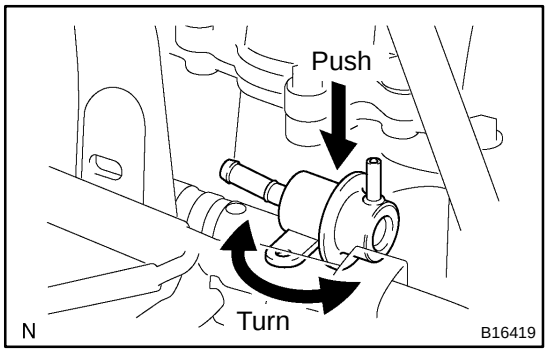

2. REINSTALL FUEL PRESSURE REGULATOR

(a) Apply a light coat of gasoline to a new O–ring, and install it to the pressure regulator.

(b) While turning the pressure regulator left and right, install it to the delivery pipe.

(c) Install the pressure regulator with the 2 bolts.

Torque: 7.5 N·m (80 kgf·cm, 66 in.·lbf)

(d) Connect the vacuum hose to intake air resonator.

(e) Connect the fuel return hose to the pressure regulator.

3. CHECK FOR FUEL LEAKS (See page SF–1)

INJECTOR

SF0OR–09

ON–VEHICLE INSPECTION

1. REMOVE THROTTLE BODY COVER

2. REMOVE INTAKE AIR CONNECTOR

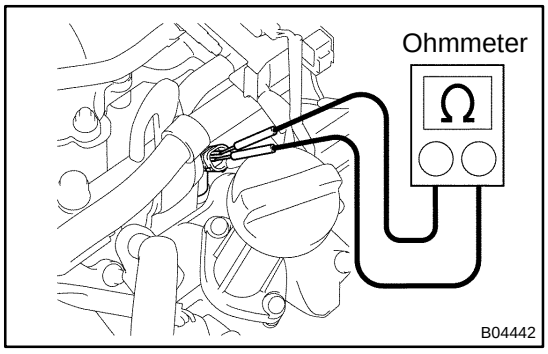

3. INSPECT INJECTOR RESISTANCE

(a) Disconnect the 8 injector connectors.

(b) Using an ohmmeter, measure the resistance between the terminals.

Resistance: 13.4 – 14.2 Ω at 20˚C (68˚F)

If the resistance is not as specified, replace the injector.

(c) Reconnect the 8 injector connectors.

4. REINSTALL INTAKE AIR CONNECTOR

5. REINSTALL THROTTLE BODY COVER

SF0OS–11

COMPONENTS

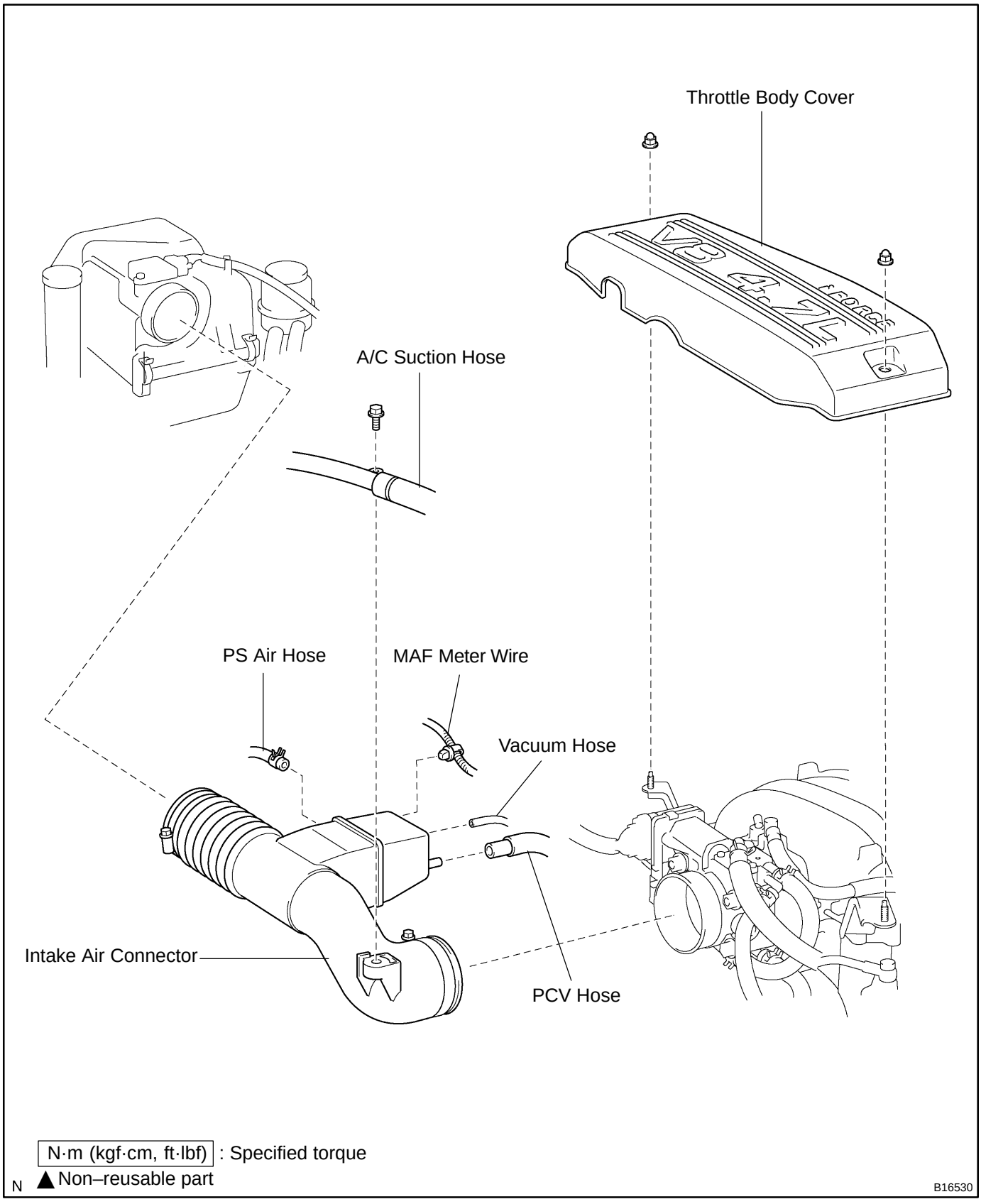

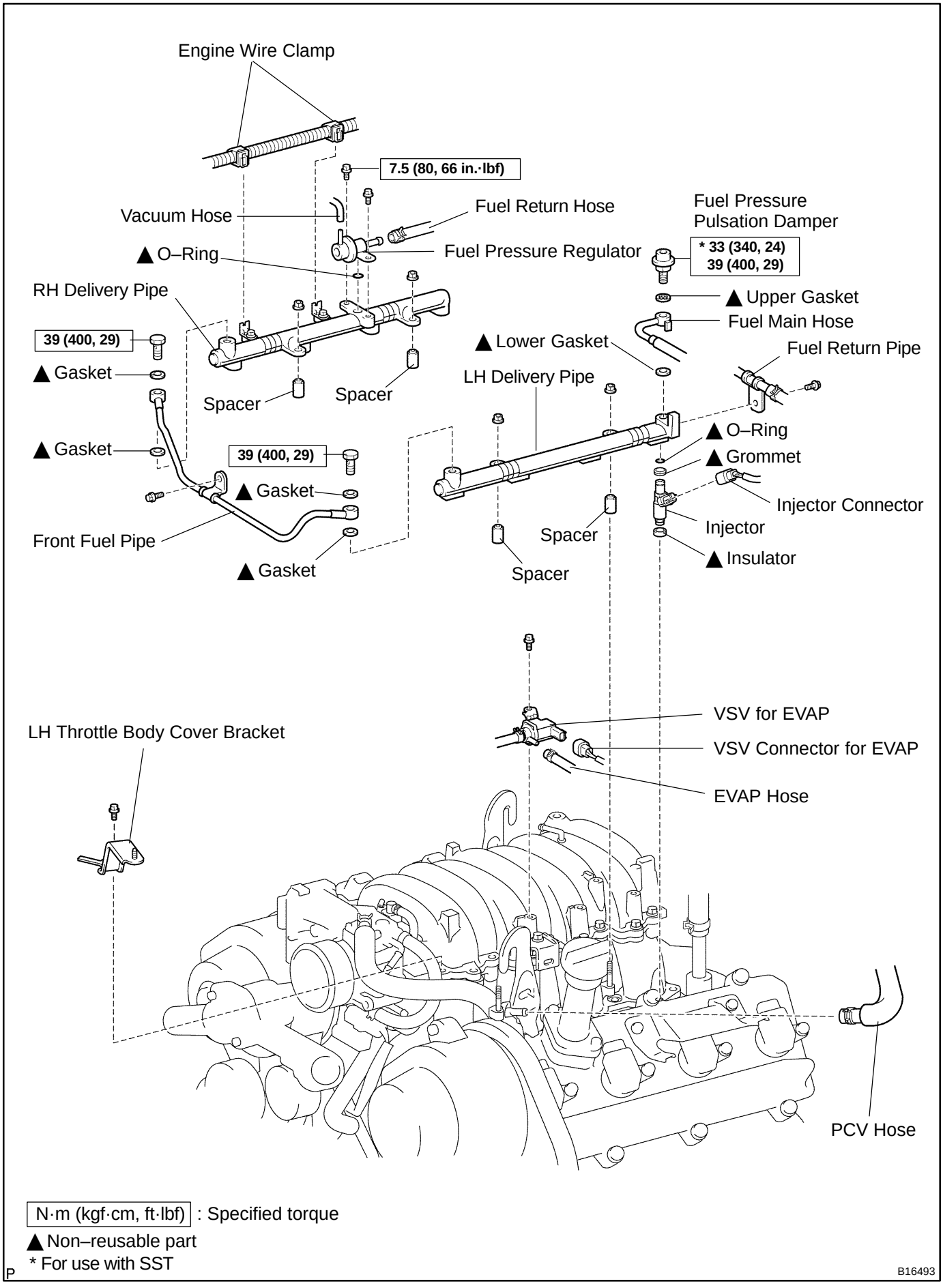

N·m (kgf·cm, ft·lbf) : Specified torque

▲ Non–reusable part

* For use with SST

P

B16493

SF133–06

REMOVAL

1. REMOVE THROTTLE BODY COVER

2. REMOVE INTAKE AIR CONNECTOR

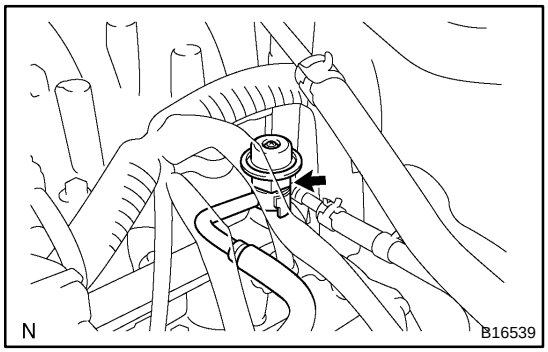

3. REMOVE FUEL PRESSURE PULSATION DAMPER

Remove the pulsation damper, upper gasket, fuel main hose and lower gasket.

CAUTION:

- **Put a shop towel under the delivery pipe.**
- **Slowly loosen the pulsation damper.**

4. DISCONNECT PCV HOSE FROM PCV VALVE

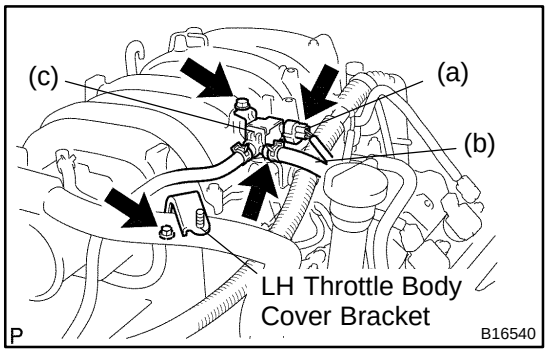

5. DISCONNECT VSV FOR EVAP

(a) Disconnect the VSV connector.

(b) Disconnect the EVAP hose.

(c) Disconnect the VSV from the intake manifold.

6. REMOVE LH THROTTLE BODY COVER BRACKET

Remove the bolt and cover bracket.

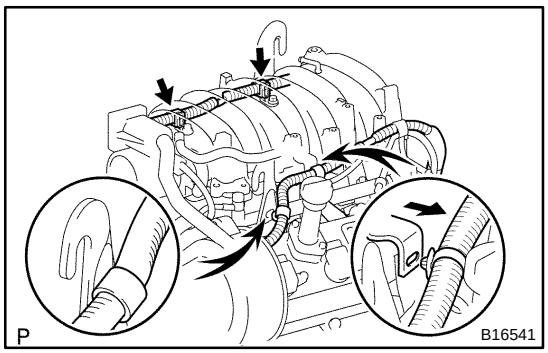

7. DISCONNECT ENGINE WIRES

(a) Disconnect the engine wire clamps from the No. 1 engine hanger and engine wire bracket.

(b) Disconnect the 2 wire clamps on the engine wire from the brackets on the RH delivery pipe.

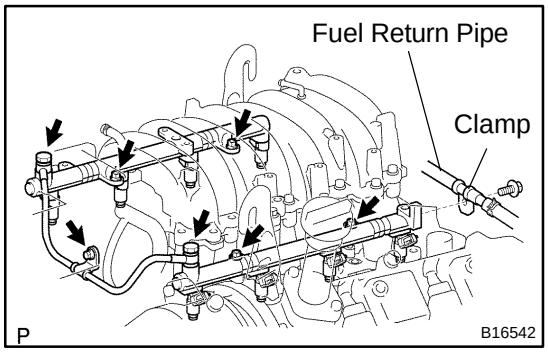

8. REMOVE DELIVERY PIPES AND INJECTORS

NOTICE:

- **Be careful not to drop the injectors when removing the delivery pipes.**
- **Pay attention to put any hung load on the injector to and from the side direction.**

(a) Remove the bolt holding the clamp on the fuel return pipe to the LH delivery pipe.

(b) Remove the bolt, 2 union bolts, 4 gaskets and front fuel pipe.

(c) Disconnect the 8 injector connectors.
(d) Remove the 4 nuts holding the delivery pipes to the lower intake manifold.
(e) Remove the 2 delivery pipes, 8 injectors, 4 spacers and 8 insulators.
(f) Remove the O–ring and grommet from each injector.

SF134–03

INSPECTION

1. INSPECT INJECTOR INJECTION

CAUTION:

Keep injector clean of sparks during the test.

(a) Disconnect the fuel inlet hose (fuel tube connector) from the fuel filter.

(b) Connect SST (attachment and hose) to the fuel tube.
SST 09268–41047 (09268–52011)

(c) Remove the pressure regulator from the delivery pipe.

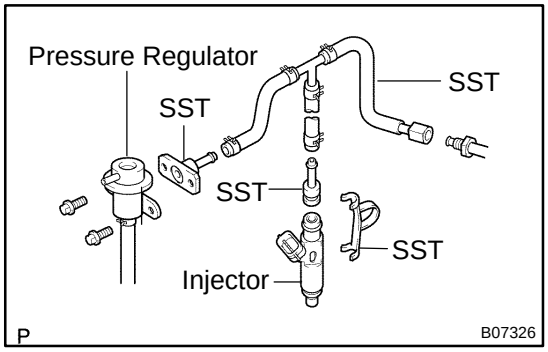

(d) Install the O–ring to the fuel inlet of the pressure regulator.

(e) Connect SST (hose) to the fuel inlet of the pressure regulator with SST (union) and the 2 bolts.
SST 09268–41047 (09268–41091)
Torque: 7.5 N·m (80 kgf·cm, 66 in.·lbf)

(f) Connect the fuel return hose to the fuel outlet of the pressure regulator.

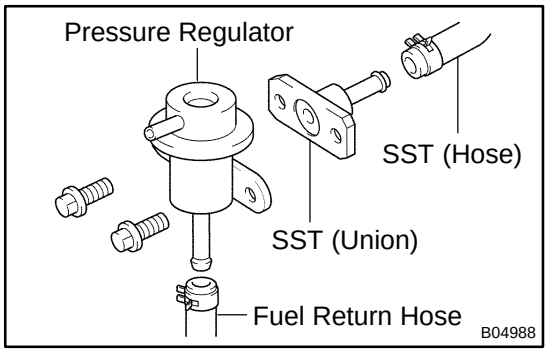

(g) Install the O–ring to the injector.

(h) Connect SST (adaptor and hose) to the injector, and hold the injector and union with SST (clamp).
SST 09268–41047 (09268–41110, 09268–41300)

(i) Put the injector into the graduated cylinder.

CAUTION:

Install a suitable vinyl hose onto the injector to prevent gasoline from splashing out.

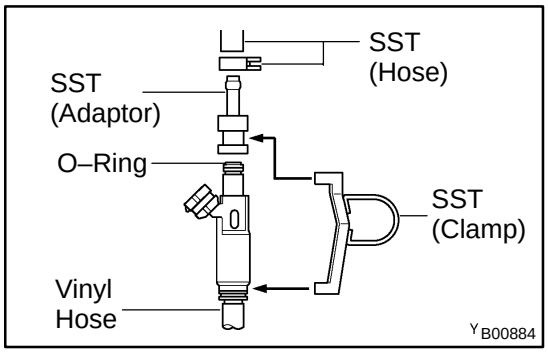

(j) Connect a hand–held tester to the DLC3.

(k) Connect the battery negative (–) cable to the battery.

(l) Turn the ignition switch ON, and push the hand–held tester main switch ON.

NOTICE:

Do not start the engine.

(m) Select the ACTIVE TEST mode on the hand–held tester.

(n) Please refer to the hand–held tester operator's manual for further details.

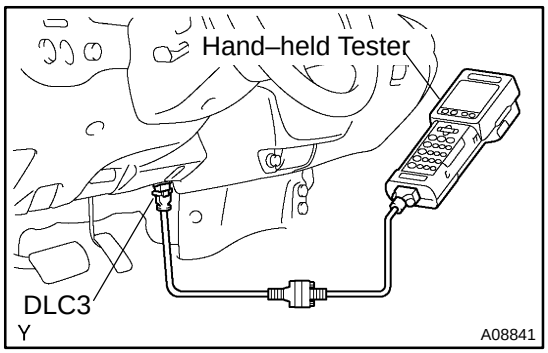

(o) Connect SST (wire) to the injector and battery for 15 seconds, and measure the injection volume with a graduated cylinder. Test each injector 2 or 3 times.
SST 09842–30070
Volume: 56 – 69 cm^3 (3.4 – 4.2 cu in.) per 15 sec.
Difference between each injector:
13 cm^3 (0.8 cu in.) or less

If the injection volume is not as specified, replace the injector.

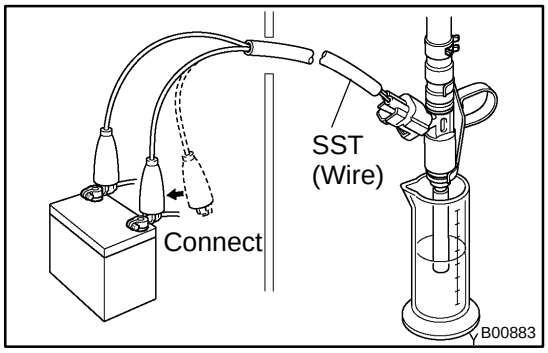

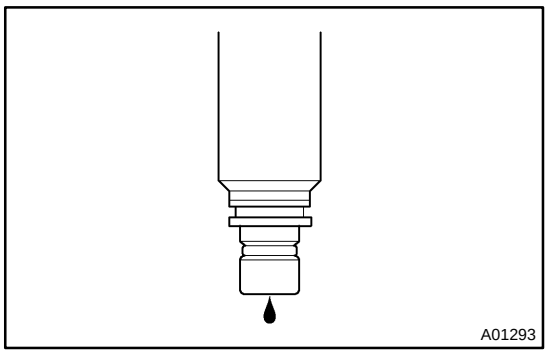

2. INSPECT LEAKAGE

(a) In the condition above, disconnect the tester probes of SST (wire) from the battery and check the fuel leakage from the injector.
SST 09842–30070
Fuel drop: 1 drop or less per 12 min.

(b) Turn the ignition switch OFF.

(c) Disconnect the negative (–) terminal cable from the battery.

(d) Remove the SST and fuel tube connector.
SST 09268–41047, 09842–30070

(e) Disconnect the hand–held tester from the DLC3.

(f) Reconnect the fuel inlet pipe to the fuel tube.

SF1UI–01

INSTALLATION

1. INSTALL INJECTORS AND DELIVERY PIPES

NOTICE:

- **Be careful not to drop the injectors when installing the delivery pipes.**
- **Pay attention to put any hung load on the injector to and from the side direction.**

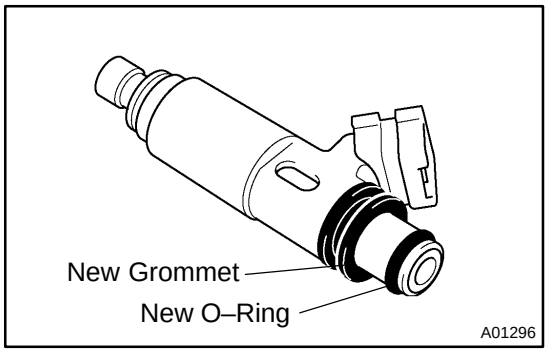

(a) Install a new grommet to each injector.
(b) Apply a light coat of gasoline to a new O–rings and install it to each injector.

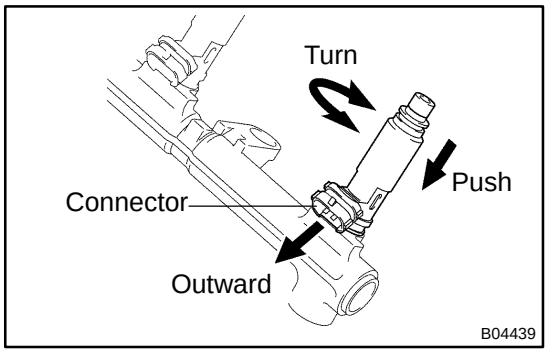

(c) While turning the injector clockwise and counterclockwise, push it to the delivery pipes. Install the 8 injectors.
(d) Position injector connector outward.

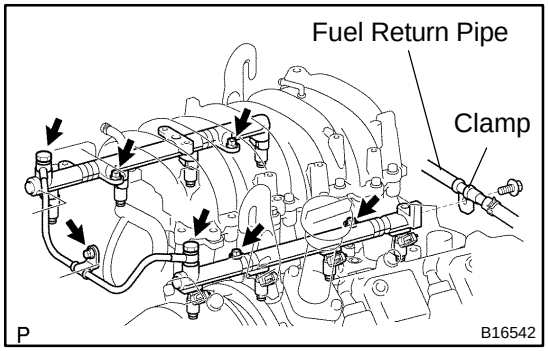

(e) Place the 4 spacers and 8 new insulators on the intake manifold.
(f) Place the 2 delivery pipes and injectors assemblies on the lower intake manifold.
(g) Temporarily install the 4 nuts.
(h) Install the front fuel pipe with the bolt, 4 new gaskets and 2 union bolts.
Torque:
39 N·m (400 kgf·cm, 29 ft·lbf) for union bolts
7.5 N·m (80 kgf·cm, 66 in.·lbf) for bolt
(i) Install the bolt holding the clamp on the fuel return pipe to the LH delivery pipe.
Torque: 7.5 N·m (80 kgf·cm, 66 in.·lbf)

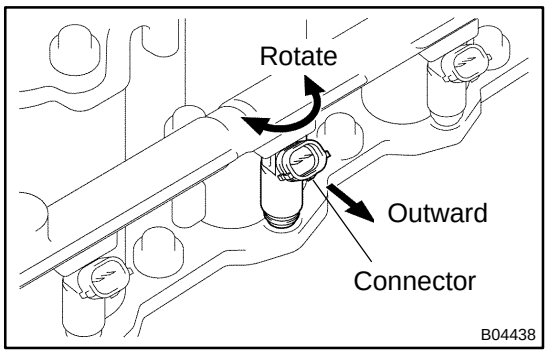

(j) Check that the injectors rotate smoothly.

HINT:

If injectors do not rotate smoothly, the probable cause is incorrect installation of O–rings. Replace the O–rings.

(k) Position injector connector outward.

(l) Tighten the 4 nuts holding the delivery pipes to the lower intake manifold.

Torque: 18 N·m (185 kgf·cm, 13 ft·lbf)

(m) Connect the 8 injectors connectors.

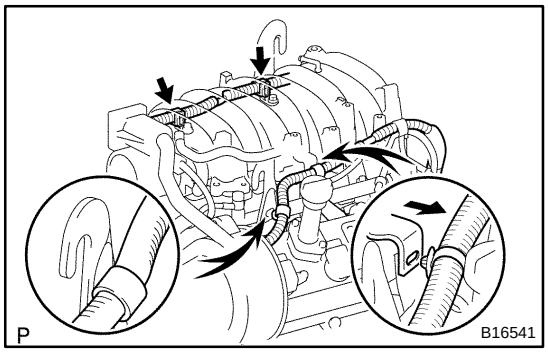

2. INSTALL ENGINE WIRES

(a) Install the 2 wire clamps on the engine wire to the brackets on the RH delivery pipe.

(b) Connect the engine wire clamps to the No.1 engine hanger and engine wire bracket.

(c) Install the engine wire protector with the 2 bolts.

3. CONNECT PCV HOSE TO PCV VALVE

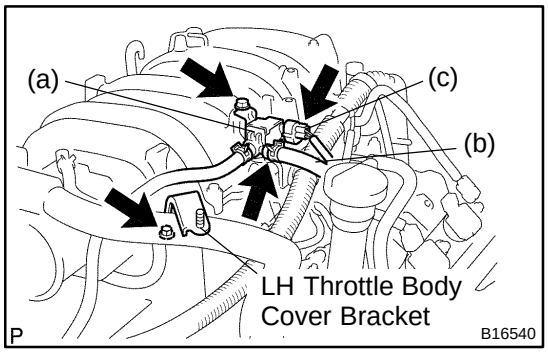

4. CONNECT VSV FOR EVAP TO UPPER INTAKE MANIFOLD

(a) Install the VSV to the upper intake manifold.

(b) Connect the EVAP hose.

(c) Connect the VSV connector.

5. INSTALL THROTTLE BODY COVER BRACKET

Install the cover bracket with the bolt.

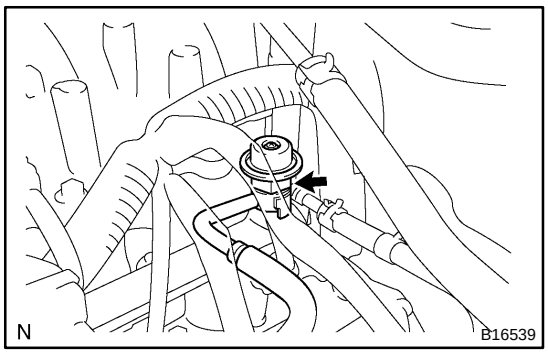

6. INSTALL FUEL PRESSURE PULSATION DAMPER (See page SF–1)

7. INSTALL INTAKE AIR CONNECTOR

8. INSTALL THROTTLE BODY COVER

FUEL TANK AND LINE

SF0OZ–14

COMPONENTS

CAUTION:

- ▲ **Always use new gaskets when replacing the fuel tank or component parts.**
- ▲ **Apply the proper torque to all parts tightened**

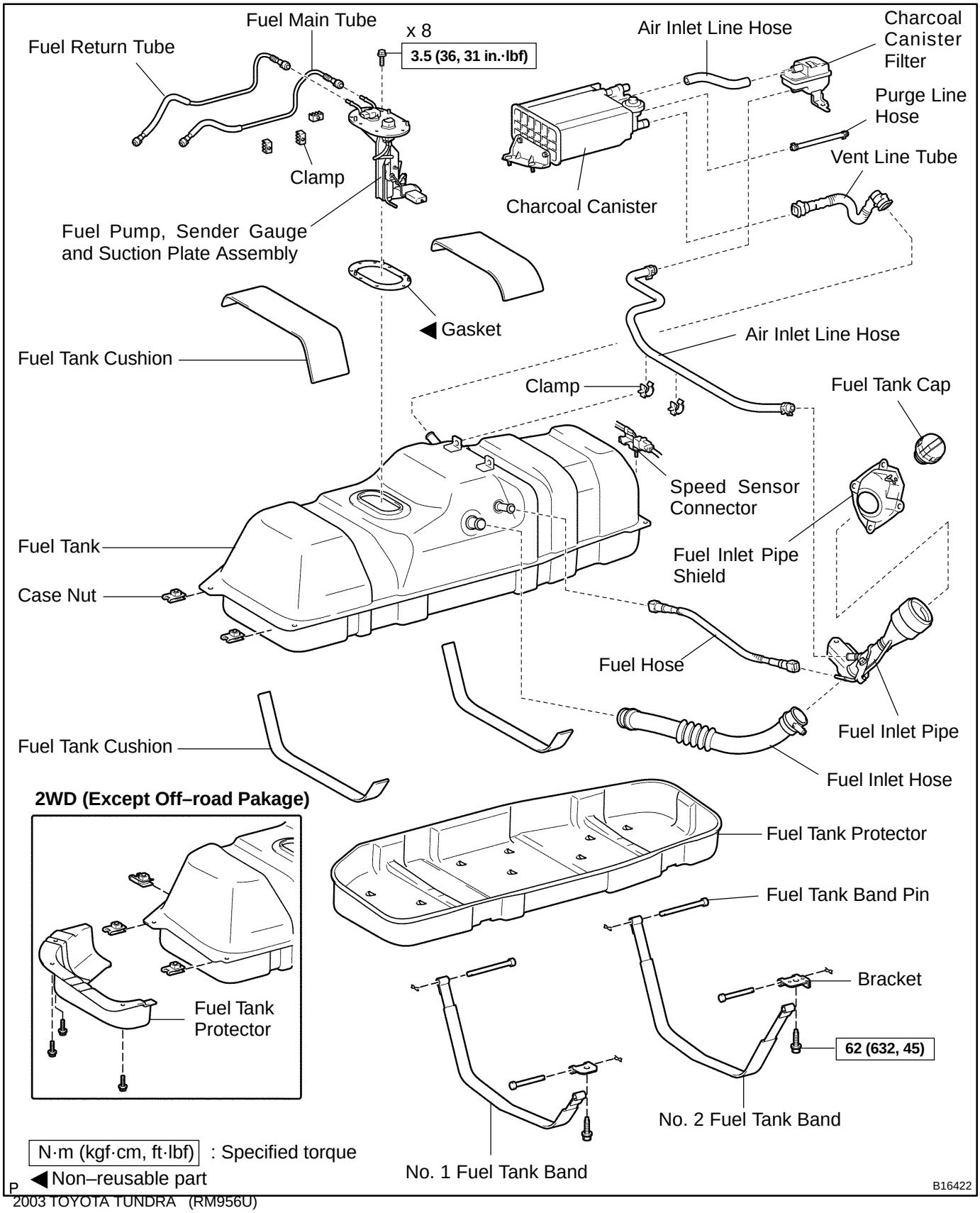

SF0P0–11

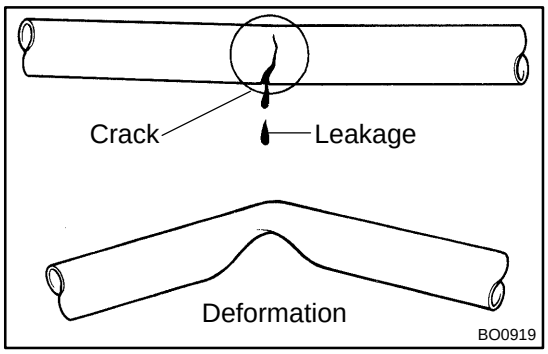

INSPECTION

INSPECT FUEL TANK AND LINE

(a) Check the fuel lines for cracks or leakage, and all connections for deformation.
(b) Check the fuel tank vapor vent system hoses and connections for looseness, sharp bends or damage.
(c) Check the fuel tank for deformation, cracks, fuel leakage or tank band looseness.
(d) Check the filler neck for damage or fuel leakage.
(e) Hose and pipe connections are as shown in the illustration.

If a problem is found, repair or replace the parts as necessary.

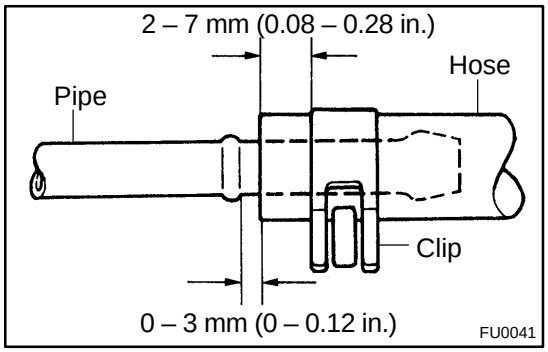

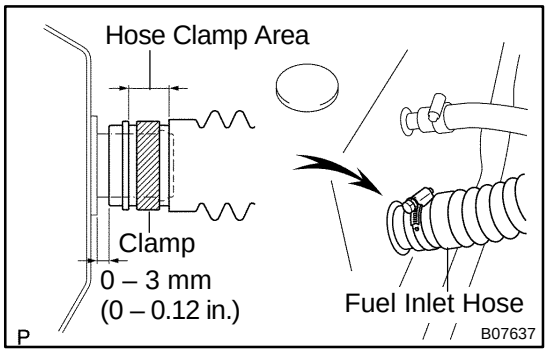

MASS AIR FLOW (MAF) METER

COMPONENTS

SF0P1–09

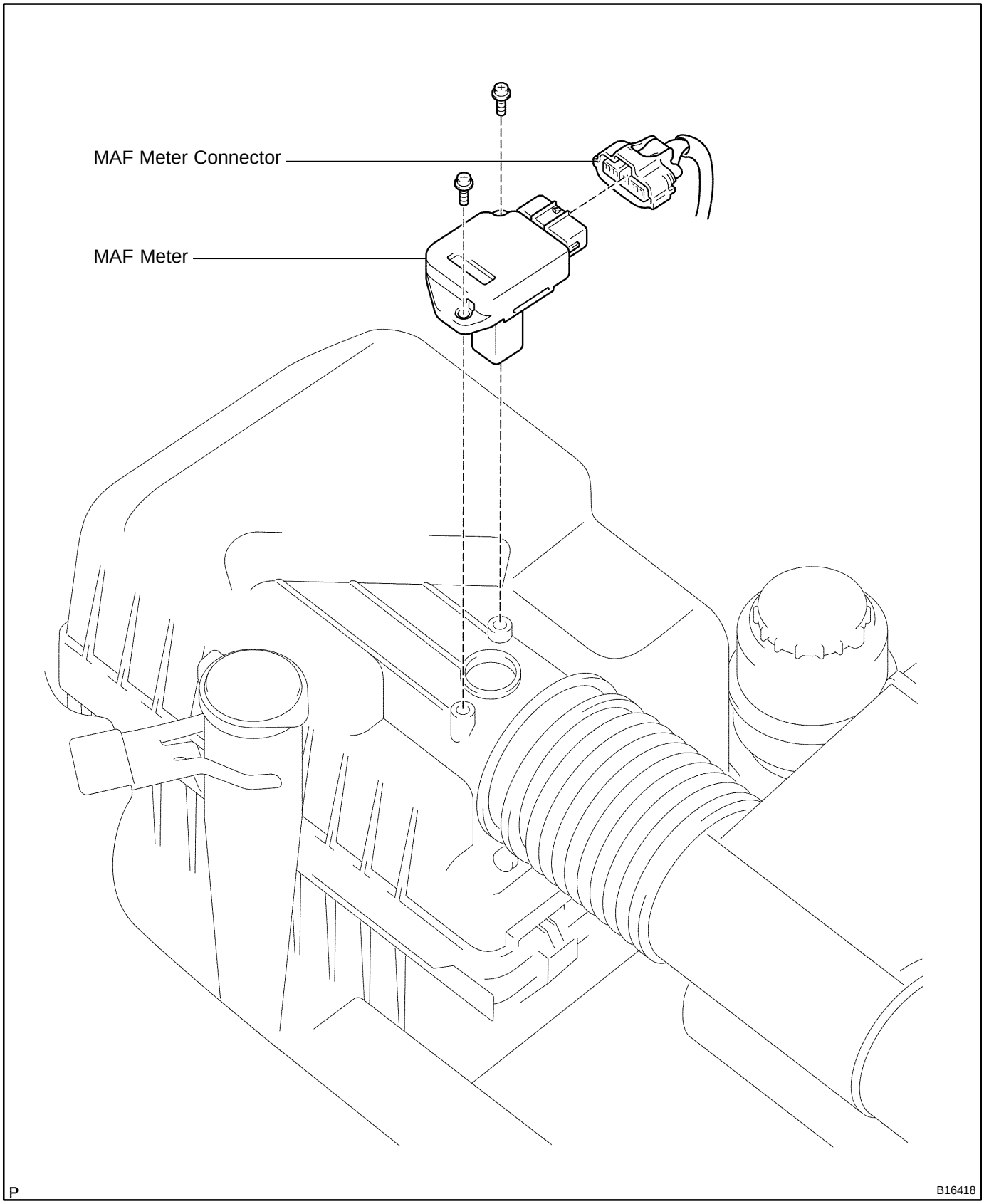

SF1TV–01

INSPECTION

1. REMOVE MAF METER

(a) Disconnect the MAF meter connector.

(b) Remove the 2 screws and MAF meter.

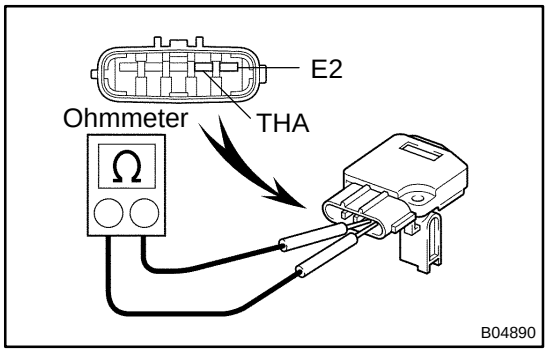

2. INSPECT MAF METER

(a) Using an ohmmeter, measure the resistance between terminals THA and E2.

Resistance:

Temperature	Resistance
–20˚C (–4˚F)	12.5 – 16.9 kΩ
20˚C (68˚F)	2.19 – 2.67 kΩ
60˚C (140˚F)	0.50 – 0.68 kΩ

If the resistance is not as specified, replace the MAF meter.

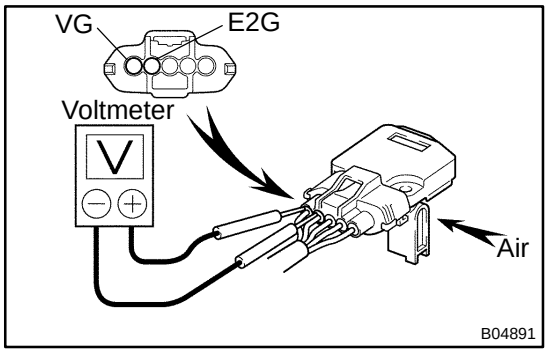

(b) Inspect for operation.

(1) Connect the MAF meter connector.

(2) Connect the negative (–) terminal cable to the battery.

(3) Turn the ignition switch ON.

(4) Using a voltmeter, connect the positive (+) tester probe to terminal VG, and negative (–) tester probe to terminal E2G.

(5) Blow air into the MAF meter, and check that the voltage fluctuates.

If operation is not as specified, replace the MAF meter.

(6) Turn the ignition switch OFF.

(7) Disconnect the negative (–) terminal cable from the battery.

(8) Disconnect the MAF meter connector.

3. REINSTALL MAF METER

(a) Install the MAF meter with the 2 screws.

(b) Connect the MAF meter connector.

SF1UK–01

COMPONENTS

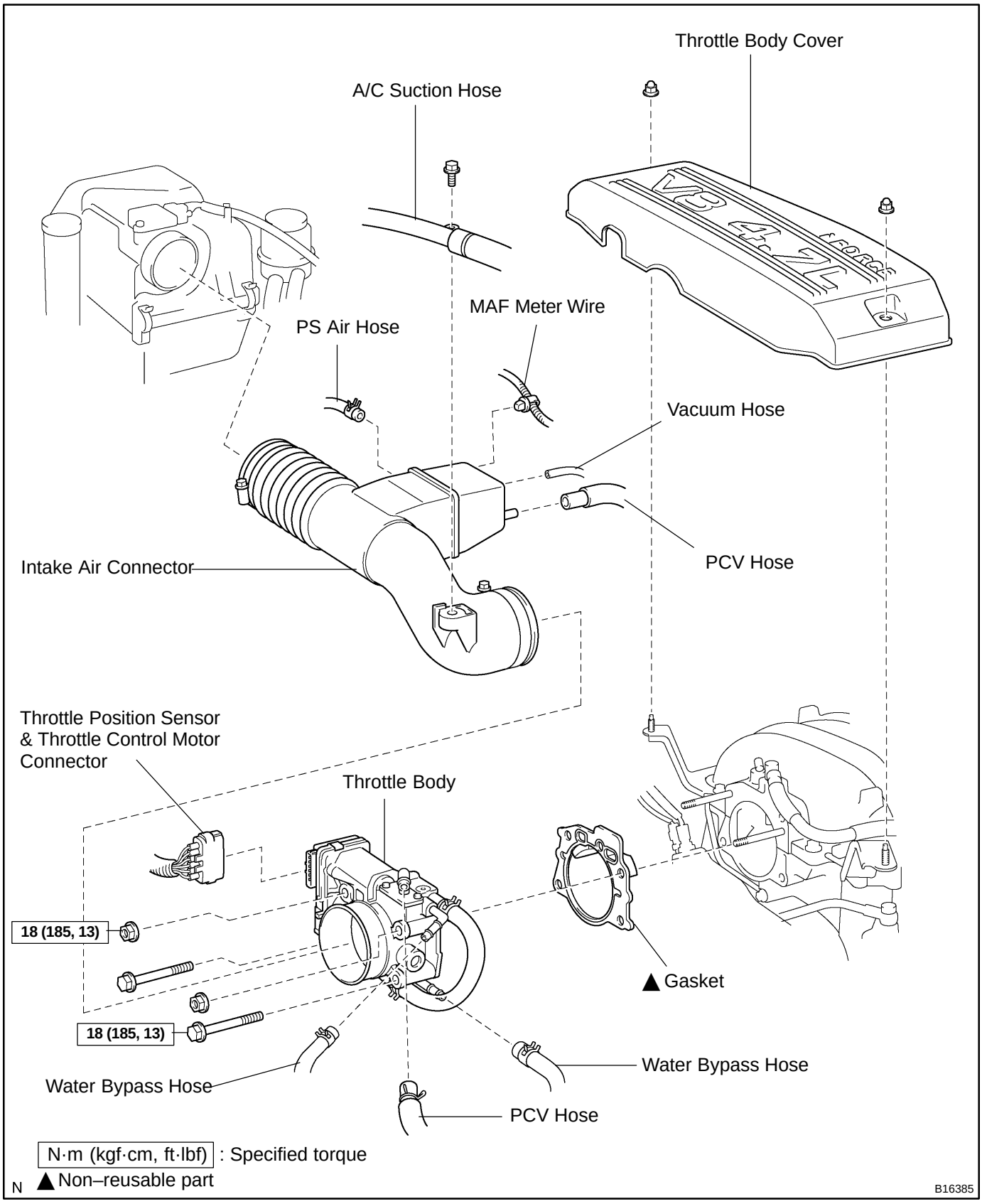

SF1UL–01

REPLACEMENT

NOTICE:

- ▲ **Be care not to give a shock to the throttle body.**
- ▲ **Be care not to disassemble the throttle body.**

1. REMOVE THROTTLE BODY COVER

2. DRAIN ENGINE COOLANT

3. REMOVE INTAKE AIR CONNECTOR

4. REMOVE THROTTLE BODY

(a) Disconnect the throttle position sensor & throttle control motor connector.

(b) Disconnect the PCV hose and water bypass hose from the throttle body.

(c) Remove the 2 bolts and 2 nuts, and disconnect the throttle body from the intake manifold.

(d) Disconnect the water bypass hose from the throttle body, and remove the throttle body.

(e) Remove the gasket.

5. REINSTALL THROTTLE BODY

(a) Connect the water bypass hose to the throttle body.

(b) Install a new gasket and the throttle body with the 2 bolts and 2 nuts.

Torque: 18 N·m (185 kgf·cm, 13 ft·lbf)

(c) Connect the water bypass hose and PCV hose to the throttle body.

(d) Connect the throttle position sensor & throttle control motor connector.

6. INSTALL INTAKE AIR CONNECTOR

7. REFILL WITH ENGINE COOLANT (See page CO–2)

8. START ENGINE AND CHECK FOR ENGINE COOLANT LEAKS

9. REINSTALL THROTTLE BODY COVER

THROTTLE BODY

SF1UJ–01

ON–VEHICLE INSPECTION

1. REMOVE THROTTLE BODY COVER

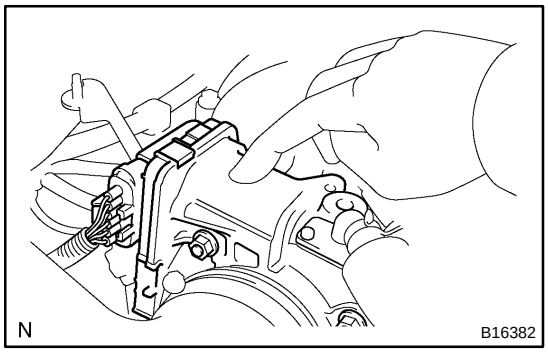

2. INSPECT SYSTEM OPERATION

(a) Inspect the throttle control motor for operating sound.
  (1) Turn the ignition switch ON.
  (2) When turning the accelerator pedal position sensor lever, check the running sound of the motor. Also, check that there is no friction sound.

If operation is not as specified, check the throttle control motor (See step 3), wiring and ECM.

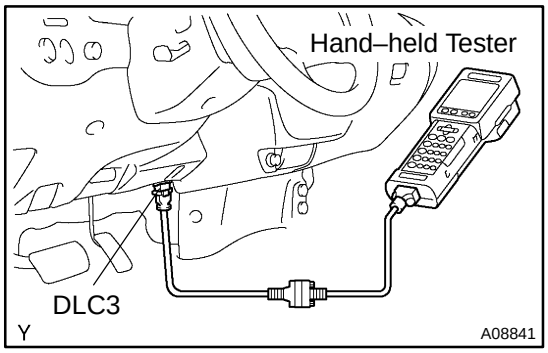

(b) Inspect the accelerator pedal position sensor.
  (1) Connect the hand–held tester to the DLC3.
  (2) Check that the MIL does not light up.
  (3) When turning the accelerator pedal position sensor lever to the full–open position, check that the throttle valve opening percentage (THROTTLE POS) of the CURRENT DATA showns the standard value.

  Standard throttle valve opening percentage:
  60 % or more

If operation is not as specified, check that the accelerator pedal position sensor (See page DI–361), wiring and ECM.

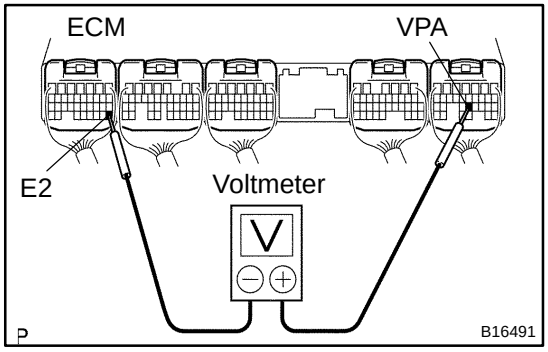

If you have no hand–held tester, measure voltage between terminals VPA and E2 of the ECM connector (See page DI–214).

(c) Inspect the air assist system.
  (1) Start the engine and check that the MIL does not light up.
  (2) Allow the engine to warm up to normal operating temperature.
  (3) Turn the A/C compressor ON to OFF, and check the idle speed.

  Idle speed (Transmission in neutral): 700 ± 50 rpm

NOTICE:

Perform inspection under condition without electrical load.

(d) After checking the above (b) to (d), perform the driving test and check that there is no sense of incongruity.

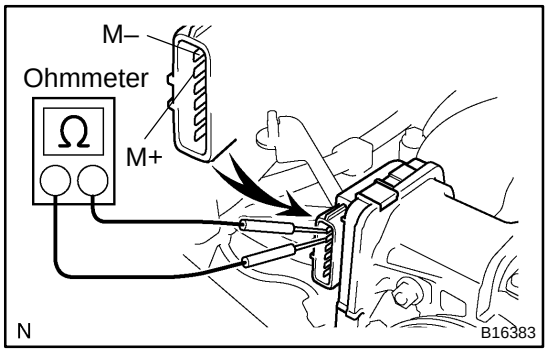

3. INSPECT THROTTLE CONTROL MOTOR

(a) Disconnect the throttle control motor connector.

(b) Using an ohmmeter, measure the motor resistance between terminal M+ and M–.

Motor resistance: 0.3 – 100 Ω at 20˚C (68˚F)

If the resistance is not as specified, replace the throttle body assembly (See page SF–32).

(c) Reconnect the throttle control motor connector.

4. INSPECT THROTTLE POSITION SENSOR (See page DI–235)

If necessary, replace the throttle body assembly (See page SF–32).

5. REINSTALL THROTTLE BODY COVER

6. INSPECT ACCELERATOR PEDAL POSITION SENSOR (See page DI–361)

If necessary, replace the accelerator pedal assembly (See page SF–52).

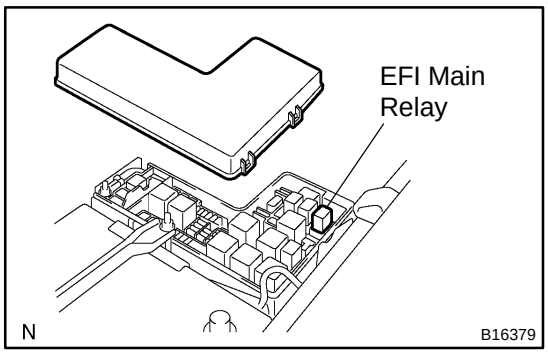

EFI MAIN RELAY

SF06G–17

INSPECTION

1. REMOVE RELAY BOX COVER

2. REMOVE EFI MAIN RELAY (Marking: EFI)

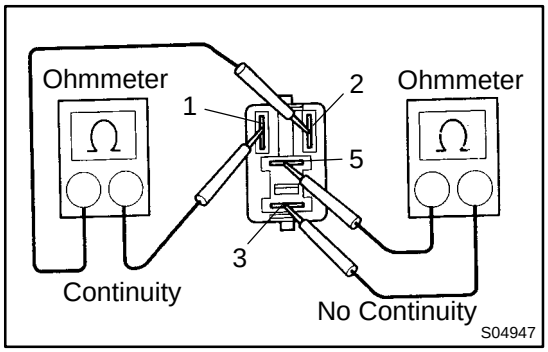

3. INSPECT EFI MAIN RELAY

(a) Inspect the relay continuity.

(1) Using an ohmmeter, check that there is continuity between terminals 1 and 2.

If there is no continuity, replace the relay.

(2) Check that there is no continuity between terminals 3 and 5.

If there is continuity, replace the relay.

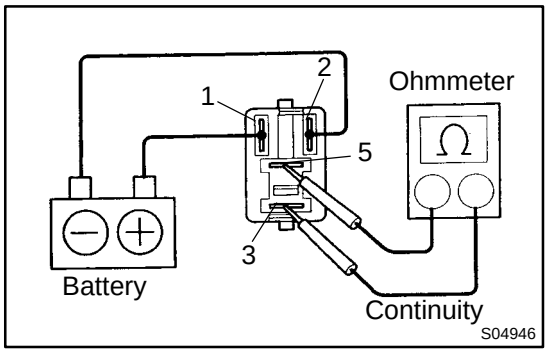

(b) Inspect the relay operation.

(1) Apply battery voltage across terminals 1 and 2.

(2) Using an ohmmeter, check that there is continuity between terminals 3 and 5.

If there is no continuity, replace the relay.

4. REINSTALL EFI MAIN RELAY

5. REINSTALL RELAY BOX COVER

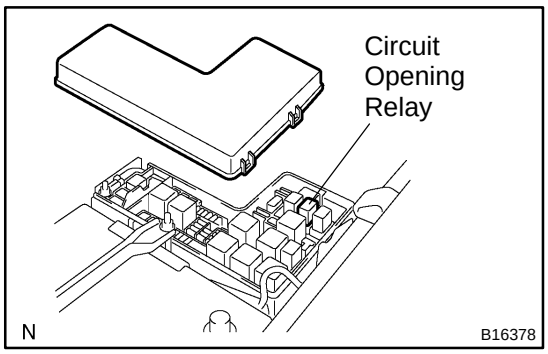

CIRCUIT OPENING RELAY

SF136–05

INSPECTION

1. REMOVE RELAY BOX COVER

2. REMOVE CIRCUIT OPENING RELAY (Marking: C/OPN)

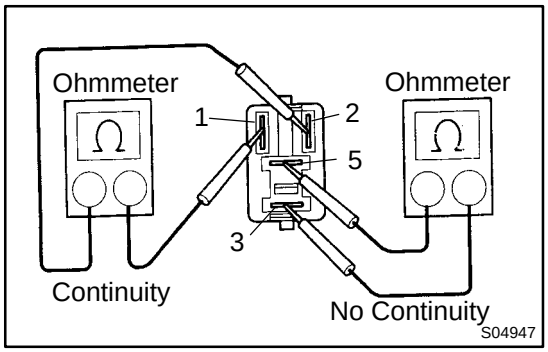

3. INSPECT CIRCUIT OPENING RELAY

(a) Inspect the relay continuity.

(1) Using an ohmmeter, check that there is continuity between terminals 1 and 2.

If there is no continuity, replace the relay.

(2) Check that there is no continuity between terminals 3 and 5.

If there is continuity, replace the relay.

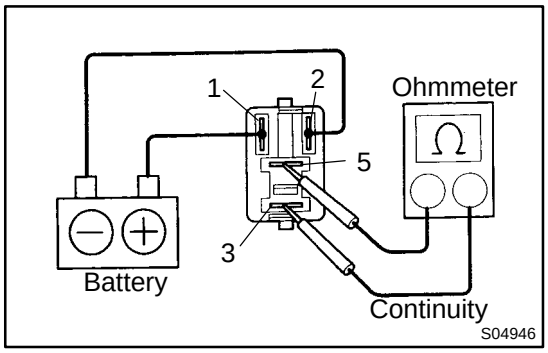

(b) Inspect the relay operation.

(1) Apply battery positive voltage across terminals 1 and 2.

(2) Using an ohmmeter, check that there is continuity between terminals 3 and 5.

If there is no continuity, replace the relay.

4. REINSTALL CIRCUIT OPENING RELAY

5. REINSTALL RELAY BOX COVER

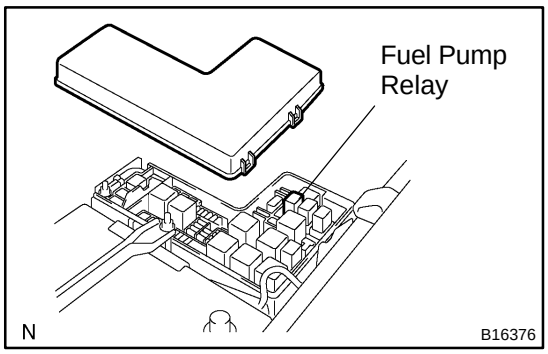

FUEL PUMP RELAY

SF137–05

INSPECTION

1. REMOVE RELAY BOX COVER

2. REMOVE FUEL PUMP RELAY (Marking: F/PMP)

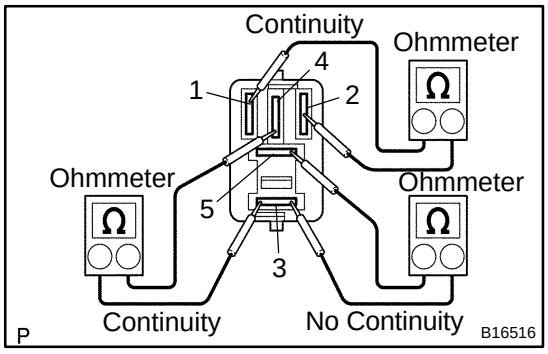

3. INSPECT FUEL PUMP RELAY

(a) Inspect the relay continuity.

(1) Using an ohmmeter, check that there is continuity between terminals 1 and 2.

If there is no continuity, replace the relay.

(2) Check that there is continuity between terminals 3 and 4.

If there is no continuity, replace the relay.

(3) Check that there is no continuity between terminals 3 and 5.

If there is continuity, replace the relay.

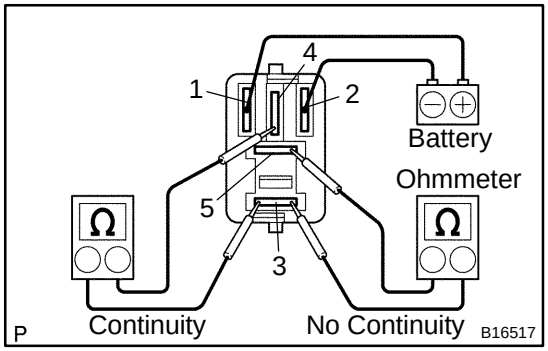

(b) Inspect the relay operation.

(1) Apply battery positive voltage across terminals 1 and 2.

(2) Using an ohmmeter, check that there is no continuity between terminals 3 and 4.

If there is continuity, replace the relay.

(3) Check that there is continuity between terminals 3 and 5.

If there is no continuity, replace the relay.

4. REINSTALL FUEL PUMP RELAY

5. REINSTALL RELAY BOX COVER

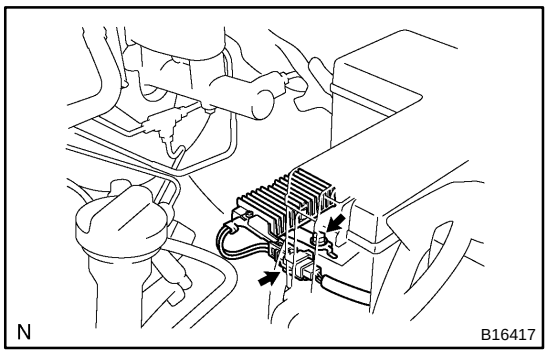

FUEL PUMP RESISTOR

SF139–03

INSPECTION

1. REMOVE FUEL PUMP RESISTOR

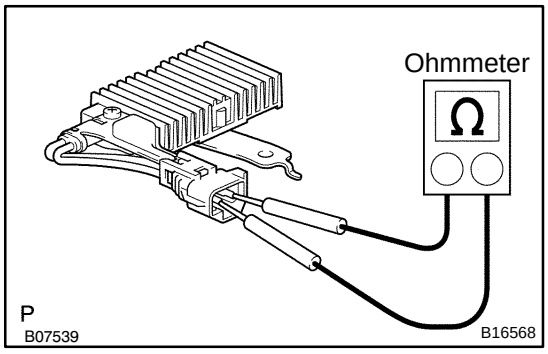

2. INSPECT FUEL PUMP RESISTOR

Using an ohmmeter, measure the resistance between the terminals.

Resistance: 0.70 – 0.76 Ω at 20˚C (68˚F)

If the resistance is not as specified, replace the resistor.

3. REINSTALL FUEL PUMP RESISTOR

Torque: 8 N·m (82 kgf·cm,71 in.·lbf)

VSV FOR EVAPORATIVE EMISSION (EVAP)

SF0Y7–07

COMPONENTS

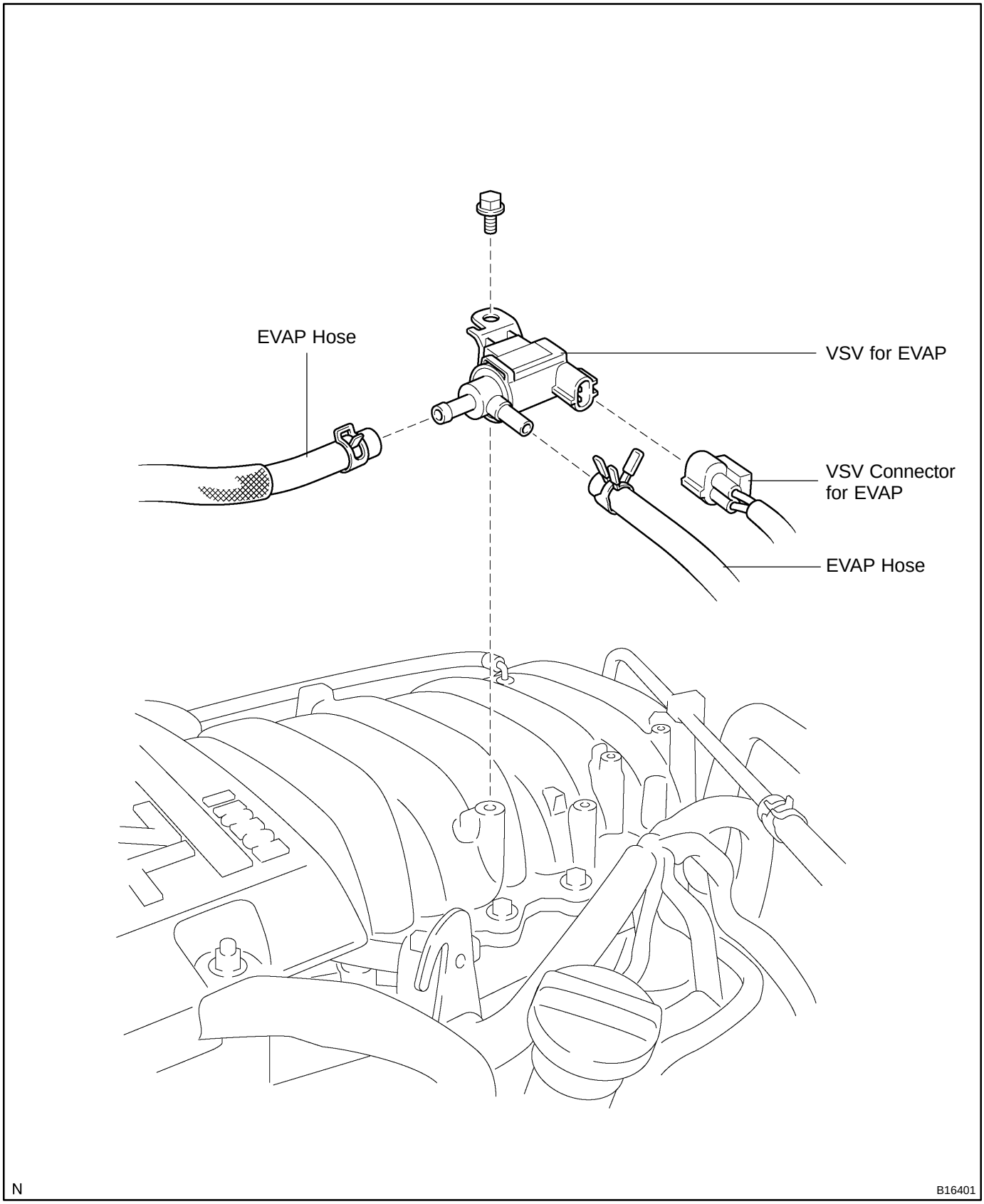

SF0PJ–07

INSPECTION

1. REMOVE VSV

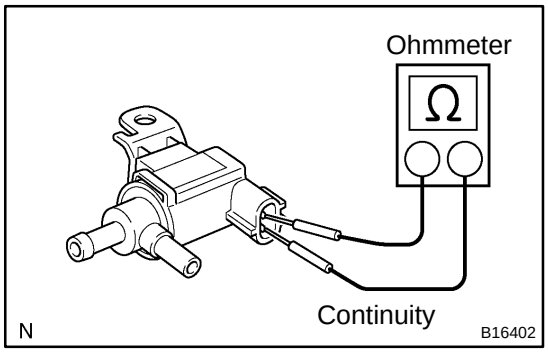

2. INSPECT VSV

(a) Inspect the VSV for open circuit.

Using an ohmmeter, check that there is continuity between the terminals.

Resistance: 26 – 30 Ω at 20˚C (68˚F)

If there is no continuity, replace the VSV.

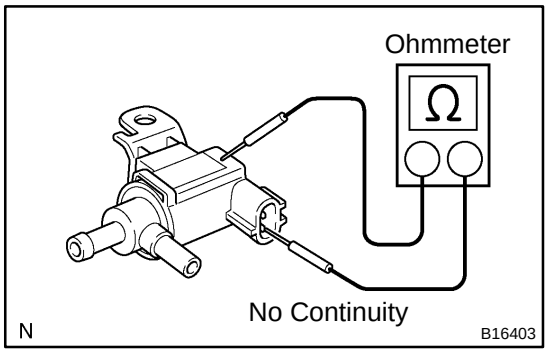

(b) Inspect the VSV for ground.

Using an ohmmeter, check that there is no continuity between each terminal and the body.

If there is continuity, replace the VSV.

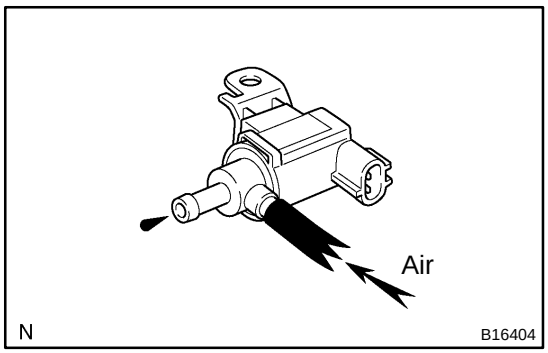

(c) Inspect the VSV operation.

(1) Check that air dose not flow from ports.

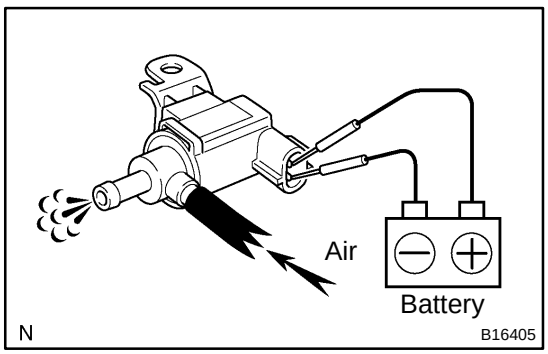

(2) Apply battery positive voltage across the terminals.

(3) Check that air flows from ports.

If operation is not as specified, replace the VSV.

3. REINSTALL VSV

VSV FOR CANISTER CLOSED VALVE (CCV)

COMPONENTS

SF1TW–01

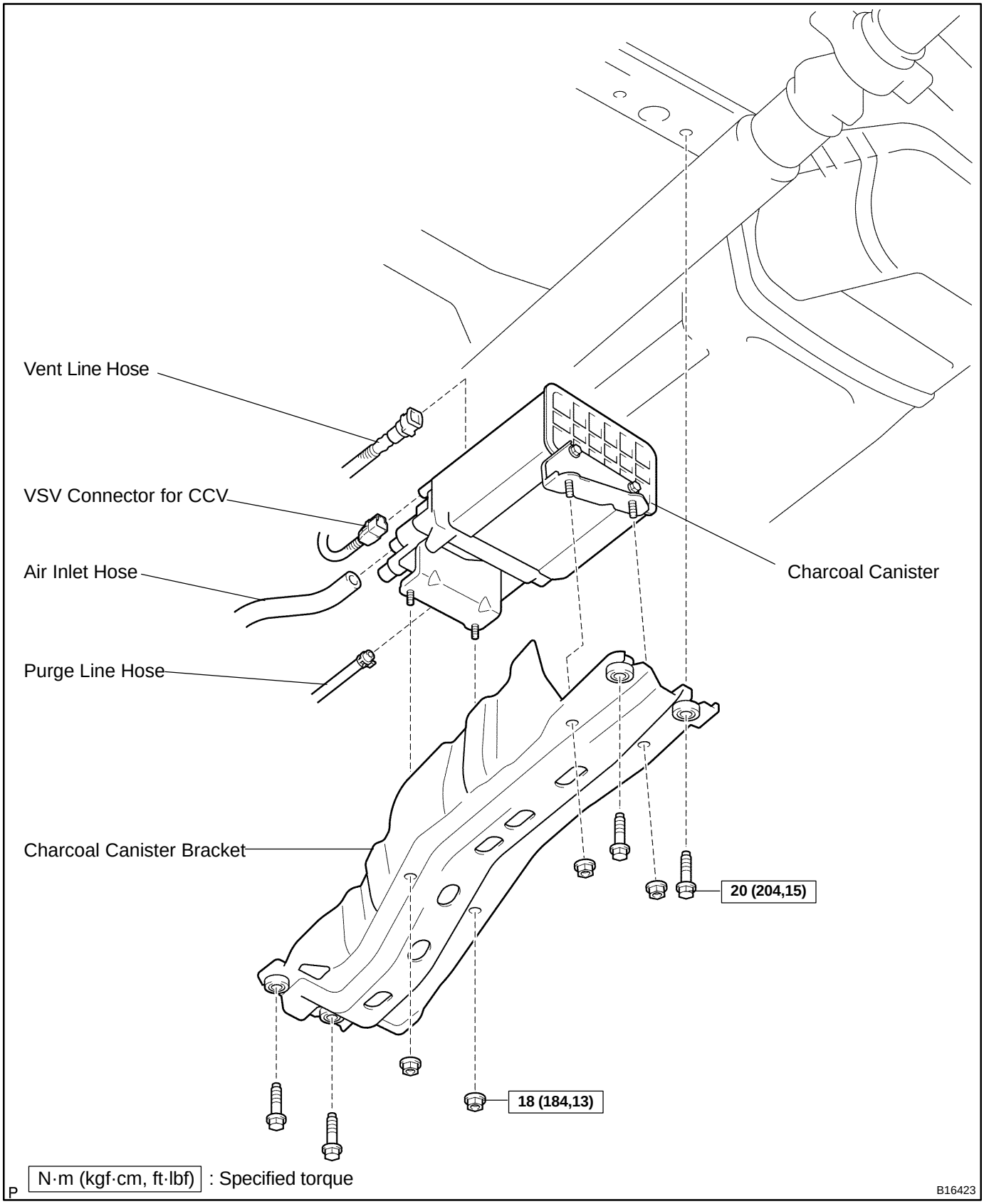

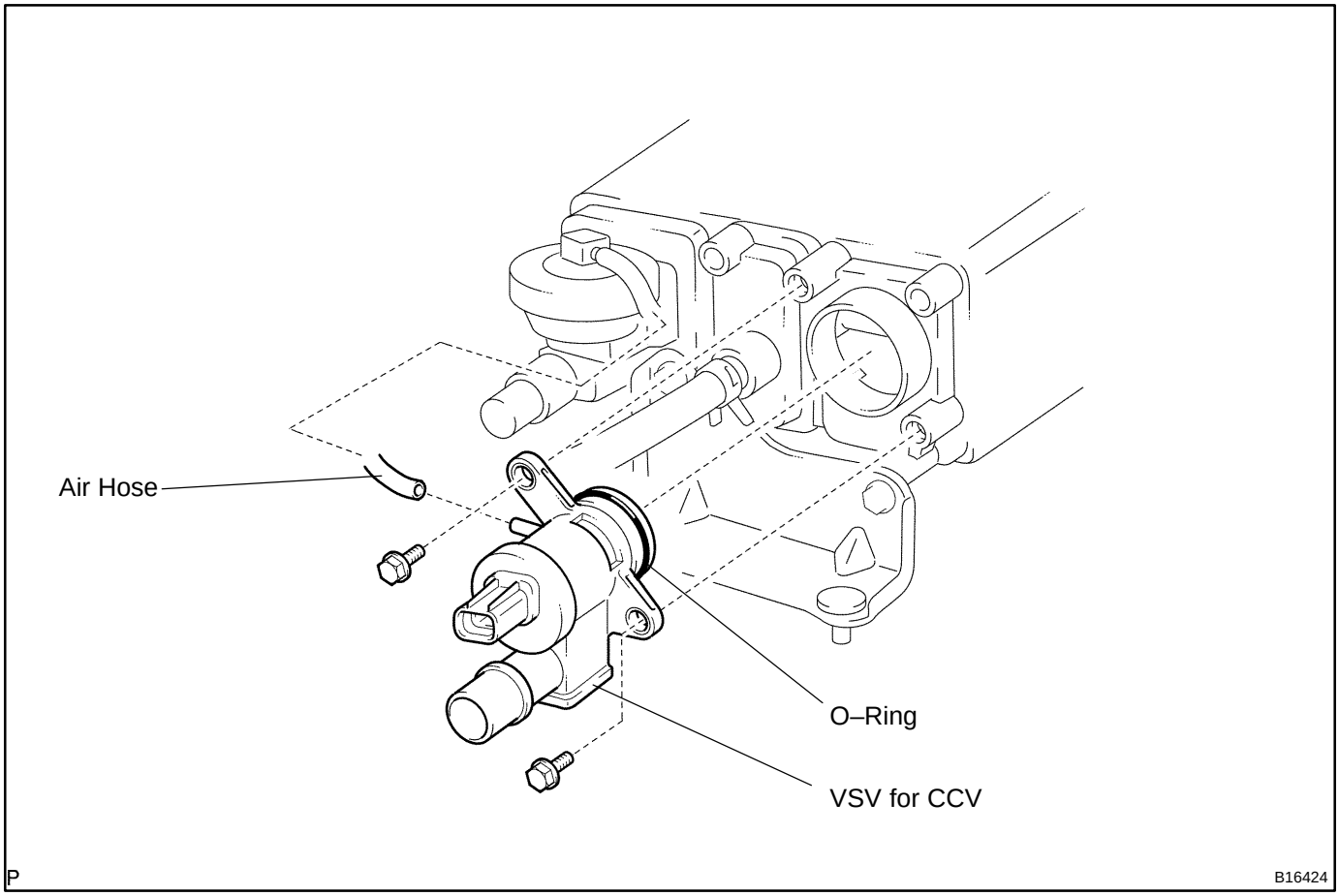
Air Hose
O–Ring
VSV for CCV
P
B16424

SF1TX–01

INSPECTION

1. REMOVE VSV

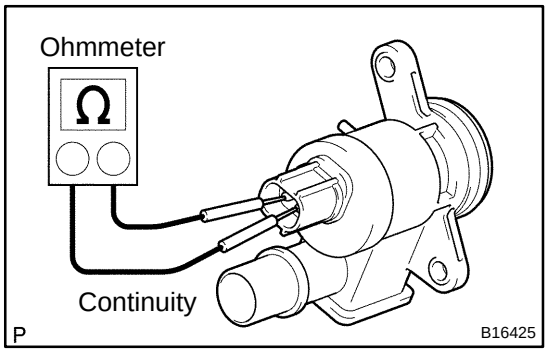

2. INSPECT VSV FOR OPEN CIRCUIT

Using an ohmmeter, check that there is continuity between the terminals.

Resistance:

20˚C (68˚F)	25 – 30 Ω
100˚C (212˚F)	32 – 42 Ω

If there is no continuity, replace the VSV.

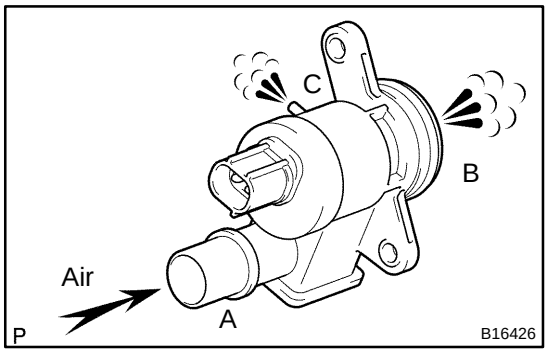

3. INSPECT VSV OPERATION

(a) Check that air flows from ports A to B and C.

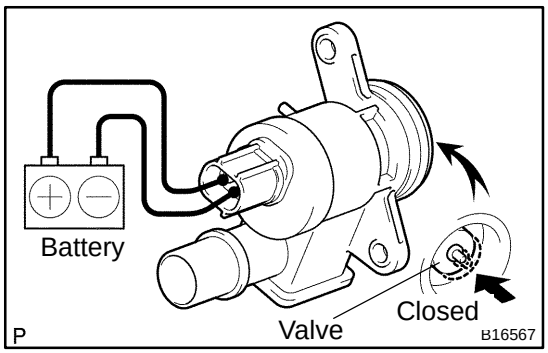

(b) Apply battery positive voltage across the terminals.

(c) Check that the valve is closed.

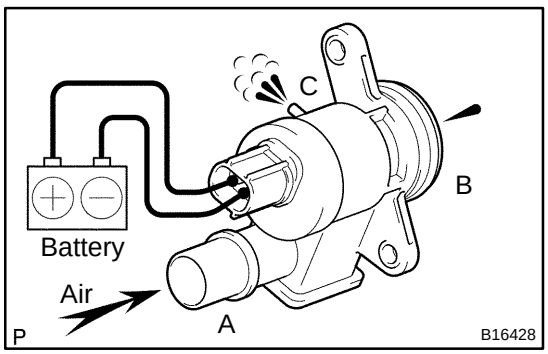

(d) Check that air does not flow from ports A to B.

(e) Check that air flows from ports A to C.

If operation is not as specified, replace the VSV.

4. REINSTALL VSV

ENGINE COOLANT TEMPERATURE (ECT) SENSOR

COMPONENTS

SF0PN–09

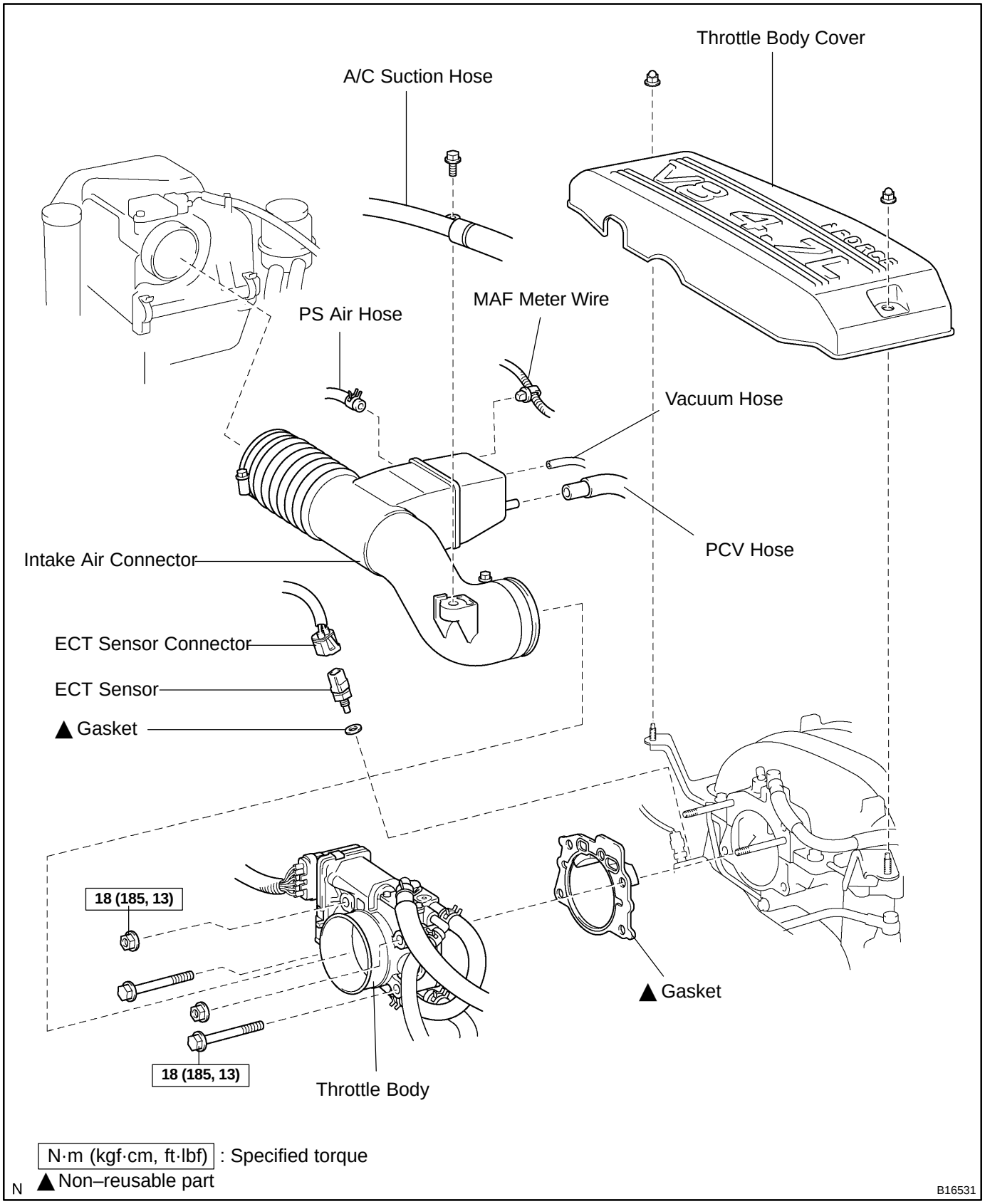

SF0PO–15

INSPECTION

1. **DRAIN ENGINE COOLANT**
2. **REMOVE THROTTLE BODY COVER**
3. **REMOVE INTAKE AIR CONNECTOR**
4. **DISCONNECT THROTTLE BODY FROM INTAKE MANIFOLDS**

(a) Remove the 2 bolts and 2 nuts, and disconnect the throttle body from the intake manifold.

(b) Remove the gasket.

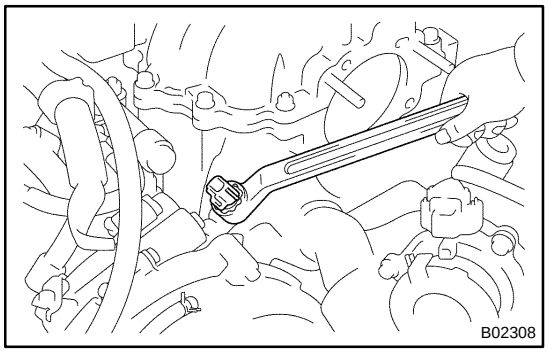

5. **REMOVE ECT SENSOR**

(a) Disconnect the ECT sensor connector.

(b) Remove the ECT sensor and gasket.

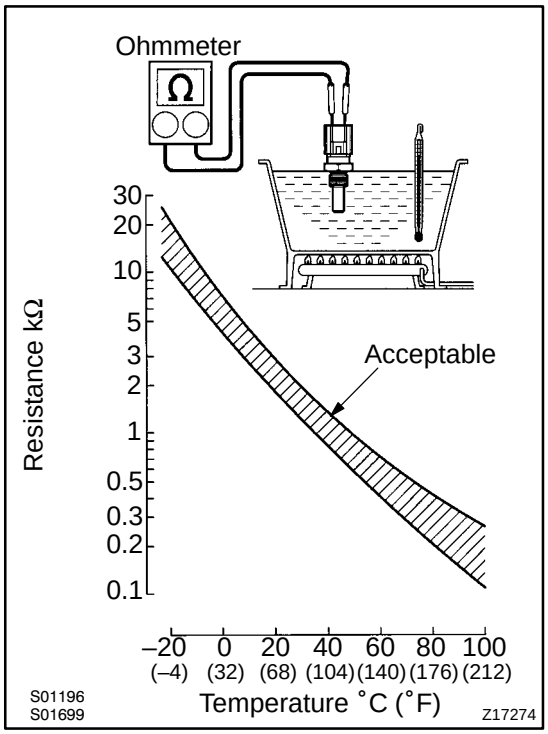

6. **INSPECT ECT SENSOR**

Using an ohmmeter, measure the resistance between the terminals.

Resistance: Refer to the graph

If the resistance is not as specified, replace the ECT sensor.

7. **REINSTALL ECT SENSOR**

(a) Install a new gasket and the ECT sensor.

Torque: 19.6 N·m (200 kgf·cm, 14 ft·lbf)

(b) Connect the ECT sensor connector.

8. **REINSTALL THROTTLE BODY TO INTAKE MANIFOLDS**

Install a new gasket and the throttle body with the 2 bolts and 2 nuts.

Torque: 18 N·m (185 kgf·cm, 13 ft·lbf)

9. **REINSTALL INTAKE AIR CONNECTOR**
10. **REFILL WITH ENGINE COOLANT (See page CO–2)**
11. **REINSTALL THROTTLE BODY COVER**

VAPOR PRESSURE SENSOR

SF0PP–09

COMPONENTS

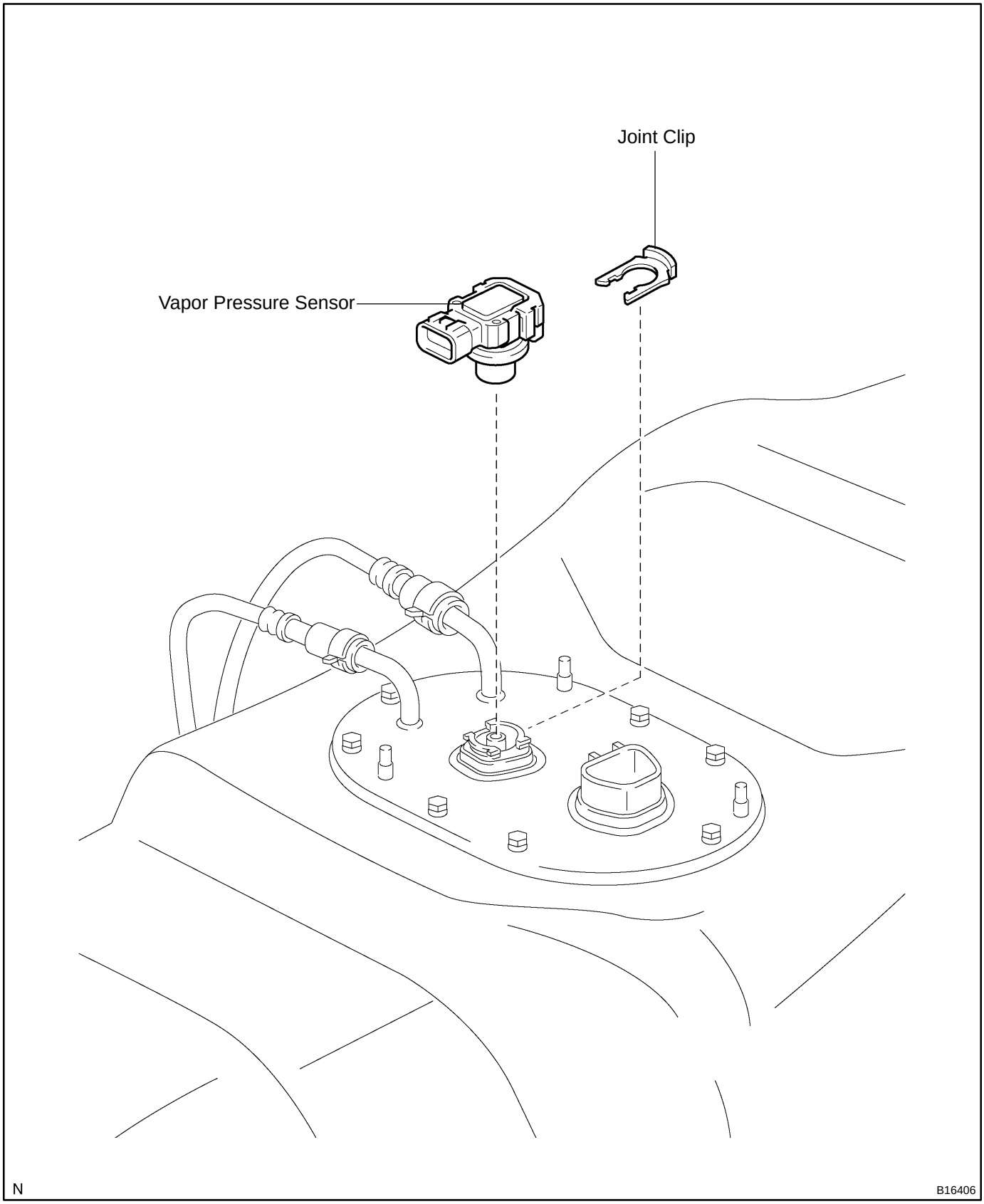

SF0PQ–09

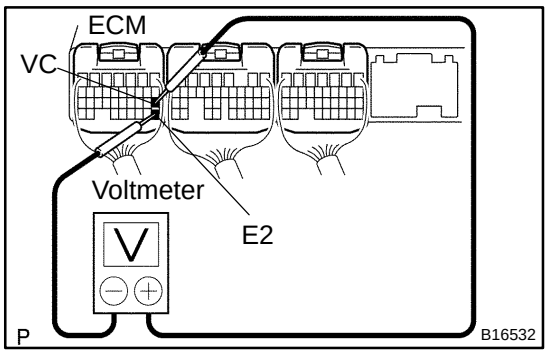

INSPECTION

1. INSPECT POWER SOURCE VOLTAGE OF VAPOR PRESSURE SENSOR

(a) Turn the ignition switch ON.

(b) Using a voltmeter, measure the voltage between connector terminals VC and E2 of the wiring harness side.
Voltage: 4.5 – 5.5 V

(c) Turn the ignition switch OFF.

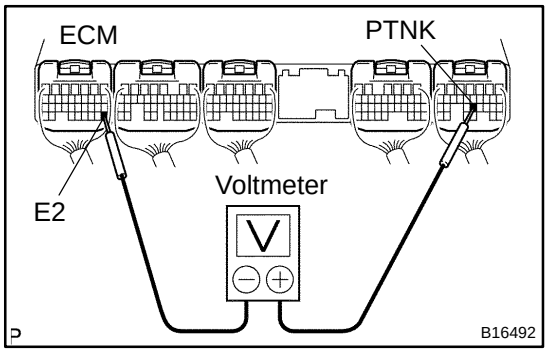

2. INSPECT POWER OUTPUT OF VAPOR PRESSURE SENSOR

(a) Turn the ignition switch ON.

(b) Remove the fuel tank cap.

(c) Connect a voltmeter to terminals 2 and 3, and measure the output voltage.
Voltage: 3.0 – 3.6 V

(d) Reinstall the fuel tank cap.

SF1UE–01

REPLACEMENT

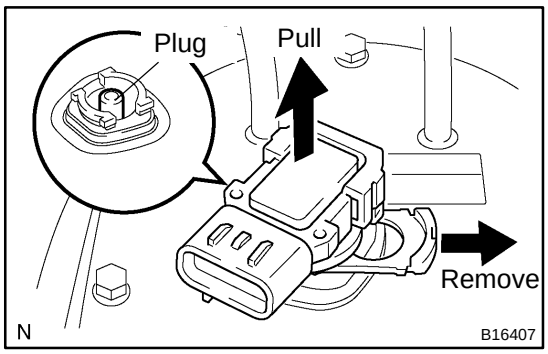

1. REMOVE FUEL TANK (See page SF–25)

2. REMOVE VAPOR PRESSURE SENSOR

(a) Slightly turn the sensor.

(b) Remove the joint clip.

(c) Pull out the sensor.

(d) Plug the port of the fuel suction plate with a clean rubber cap.

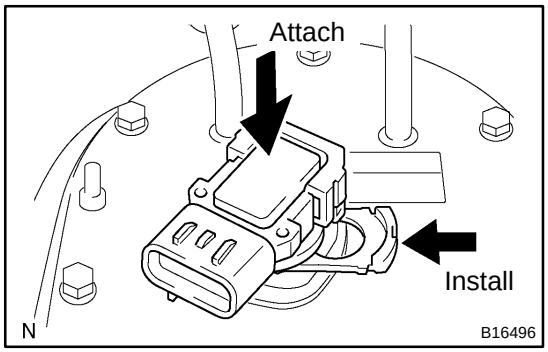

3. REINSTALL VAPOR PRESSURE SENSOR

(a) Attach the sensor to the port of the fuel suction plate.

(b) Install the joint clip.

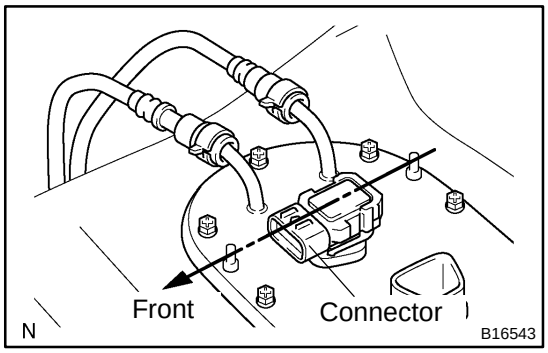

(c) Turn the sensor, and face the sensor connector forward.

4. REINSTALL FUEL TANK (See page SF–25)

KNOCK SENSOR

COMPONENTS

SF0PR–12

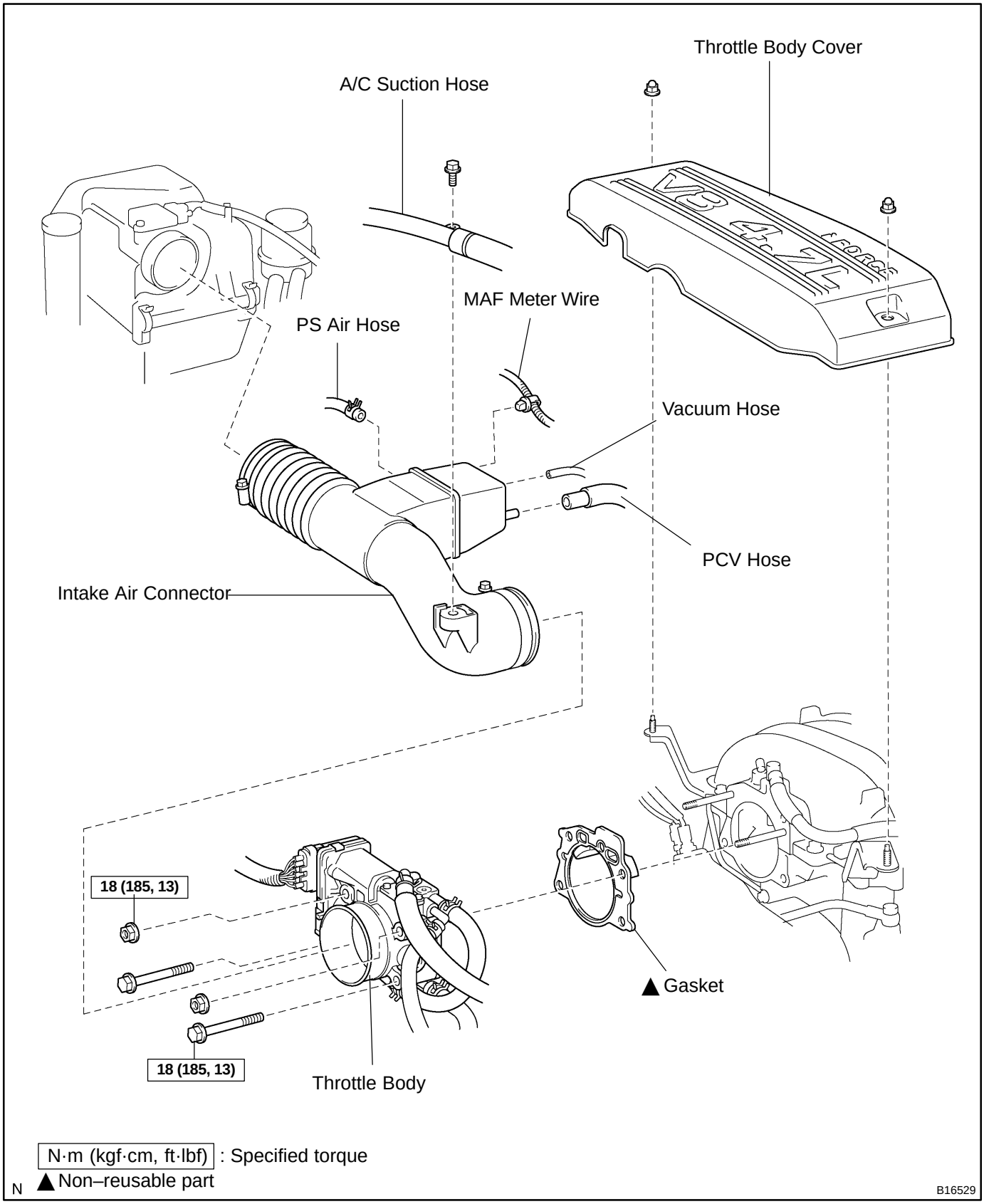

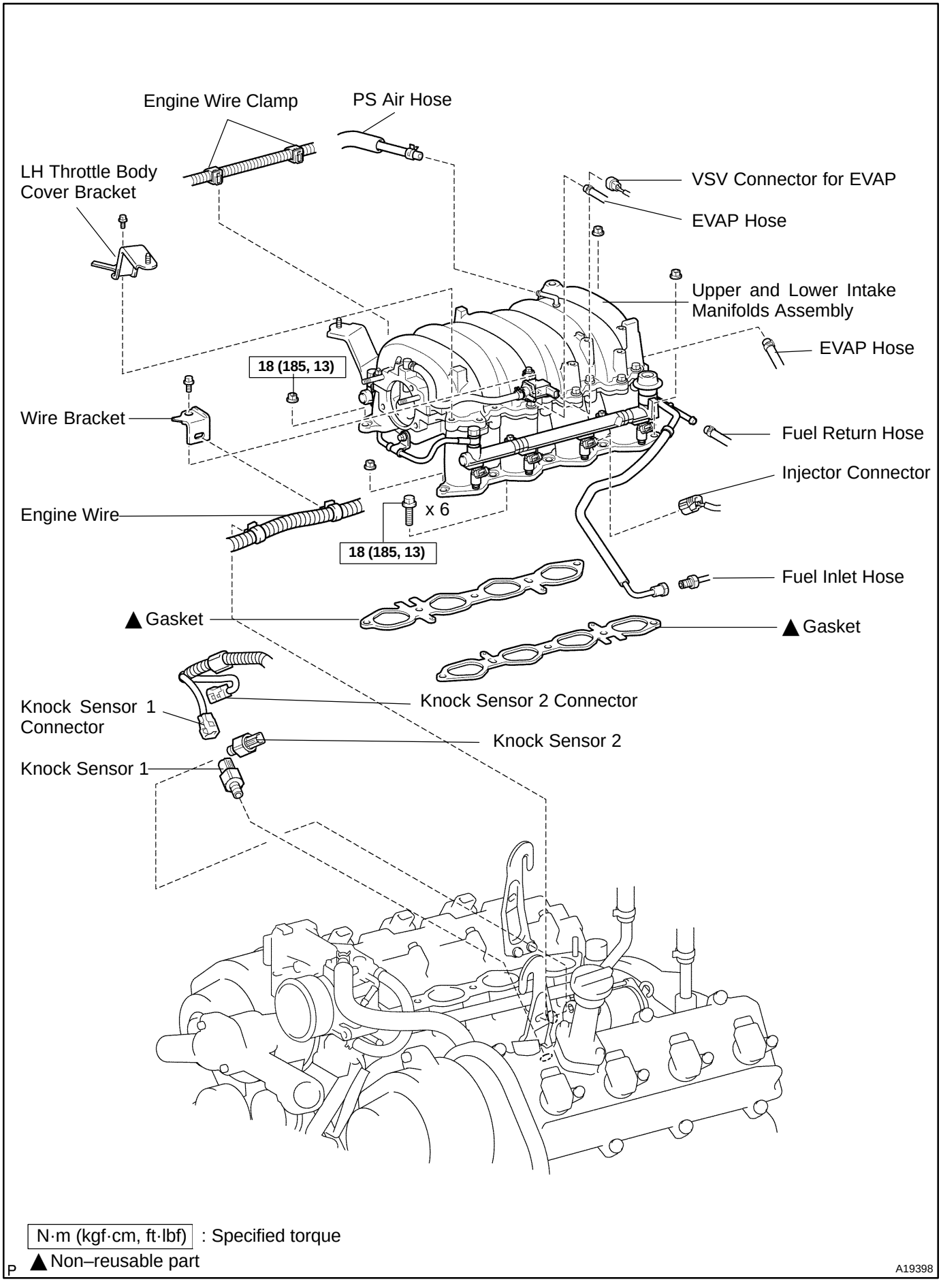
Engine Wire Clamp
PS Air Hose
LH Throttle Body Cover Bracket
VSV Connector for EVAP
EVAP Hose
Upper and Lower Intake Manifolds Assembly
EVAP Hose
18 (185, 13)
Wire Bracket
Fuel Return Hose
Injector Connector
Engine Wire
x 6
18 (185, 13)
Fuel Inlet Hose
▲ Gasket
▲ Gasket
Knock Sensor 2 Connector
Knock Sensor 1 Connector
Knock Sensor 2
Knock Sensor 1
N·m (kgf·cm, ft·lbf) : Specified torque
▲ Non–reusable part
A19398

SF0PS–09

INSPECTION

1. **REMOVE THROTTLE BODY COVER**
2. **REMOVE INTAKE AIR CONNECTOR**
3. **DISCONNECT THROTTLE BODY FROM INTAKE MANIFOLDS (See page SF–43)**
4. **REMOVE UPPER AND LOWER INTAKE MANIFOLDS ASSEMBLY (See page EM–34)**

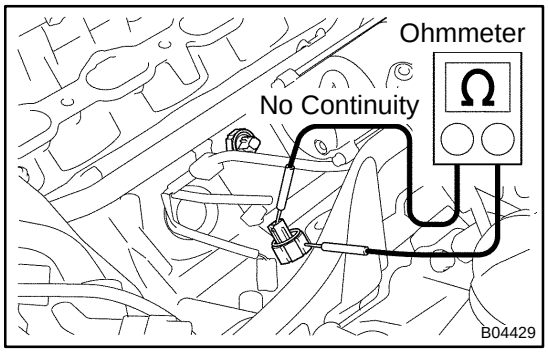

5. **INSPECT KNOCK SENSORS**

(a) Disconnect the knock sensor connectors.

(b) Using an ohmmeter, check that there is no continuity between the terminal and body.

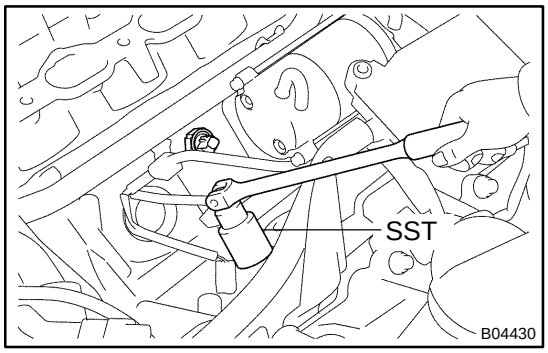

If there is continuity, replace the sensor with SST.

SST 09816–30010

Torque: 45 N·m (450 kgf·cm, 33 ft·lbf)

(c) Reconnect the knock sensor connectors.

6. **REINSTALL UPPER AND LOWER INTAKE MANIFOLDS ASSEMBLY (See page EM–56)**
7. **REINSTALL THROTTLE BODY TO INTAKE MANIFOLDS (See page SF–43)**
8. **REINSTALL INTAKE AIR CONNECTOR**
9. **REINSTALL THROTTLE BODY COVER**

HEATED OXYGEN SENSOR

SF0Y9–08

COMPONENTS

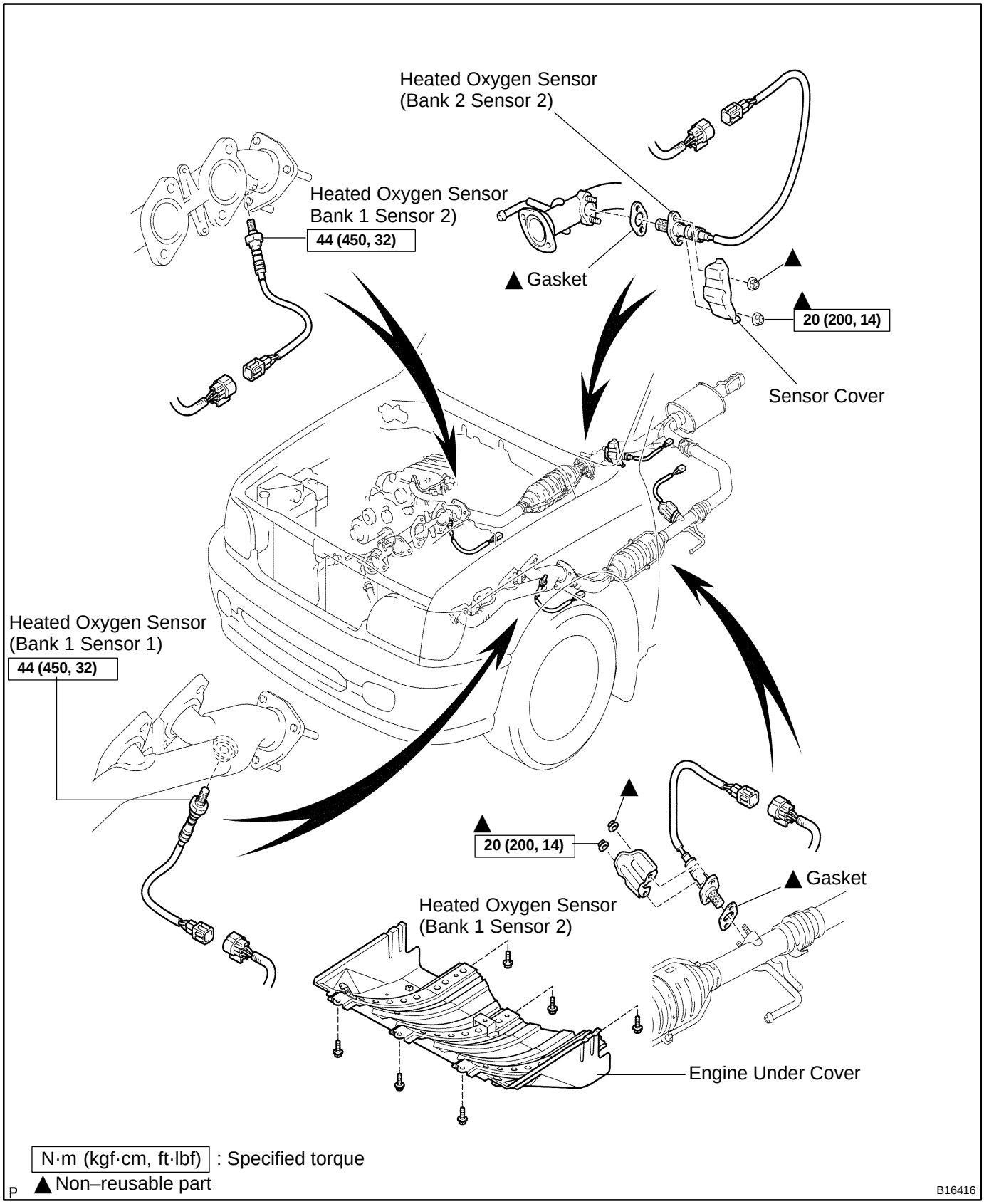

SF0YA–10

INSPECTION

1. INSPECT HEATER RESISTANCE OF HEATED OXYGEN SENSORS

(a) Disconnect the sensor connector.

(b) Using an ohmmeter, measure the resistance between terminals +B and HT.

Resistance:

20˚C (68˚F)	11 – 16 Ω
800˚C (1,472˚F)	23 – 32 Ω

If the resistance is not as specified, replace the sensor.

Torque:

44 N·m (450 kgf·cm, 32 ft·lbf) for sensor 1

20 N·m (200 kgf·cm, 14 ft·lbf) for sensor 2

(c) Reconnect the sensor connector.

2. INSPECT OPERATION OF HEATED OXYGEN SENSORS (See pages DI–246 and DI–259)

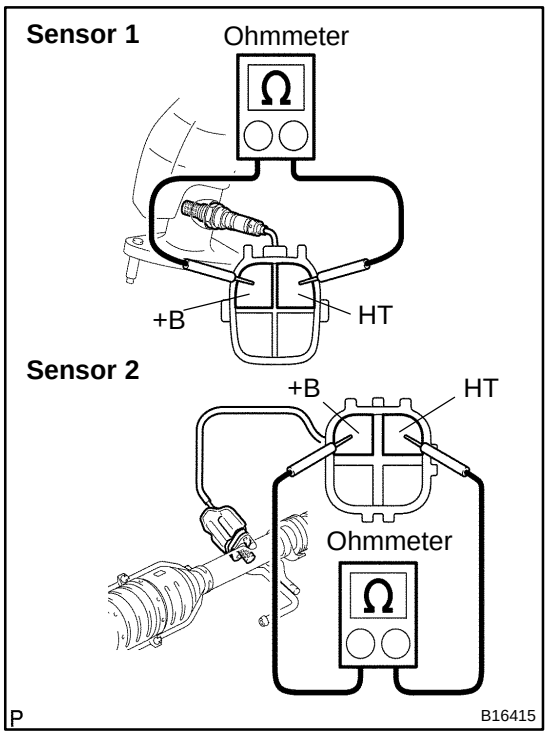

ACCELERATOR PEDAL POSITION SENSOR

COMPONENTS

SF1UM–01

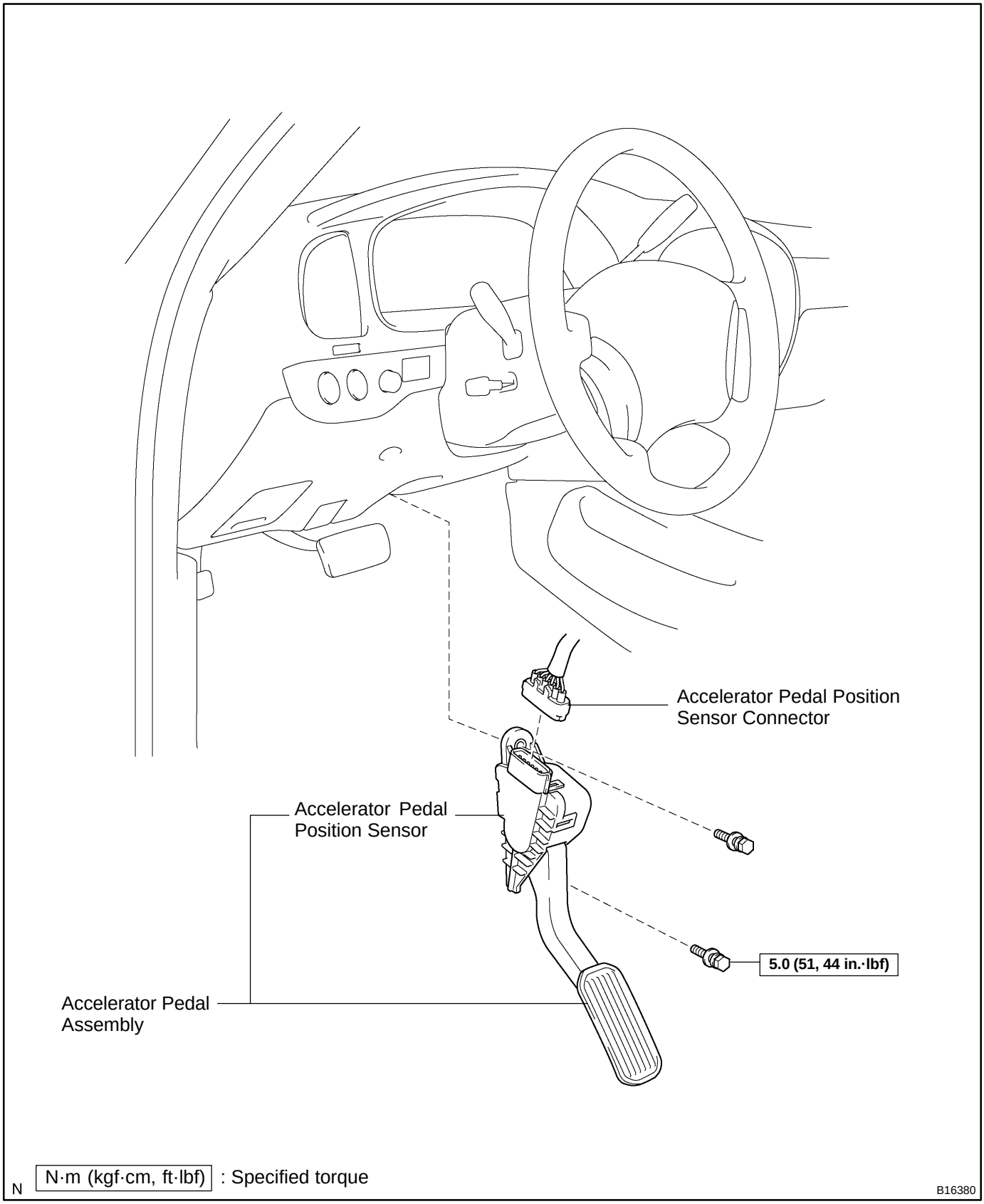

SF1UN–01

INSPECTION

INSPECT ACCELERATOR PEDAL POSITION SENSOR (See page DI–361)

If necessary, replace the accelerator pedal assembly.

NOTICE:

- **Be care not to give a shock to the accelerator pedal assembly.**
- **Be care not to disassemble the accelerator pedal assembly.**

ENGINE CONTROL MODULE (ECM)

COMPONENTS

SF0Q0–11

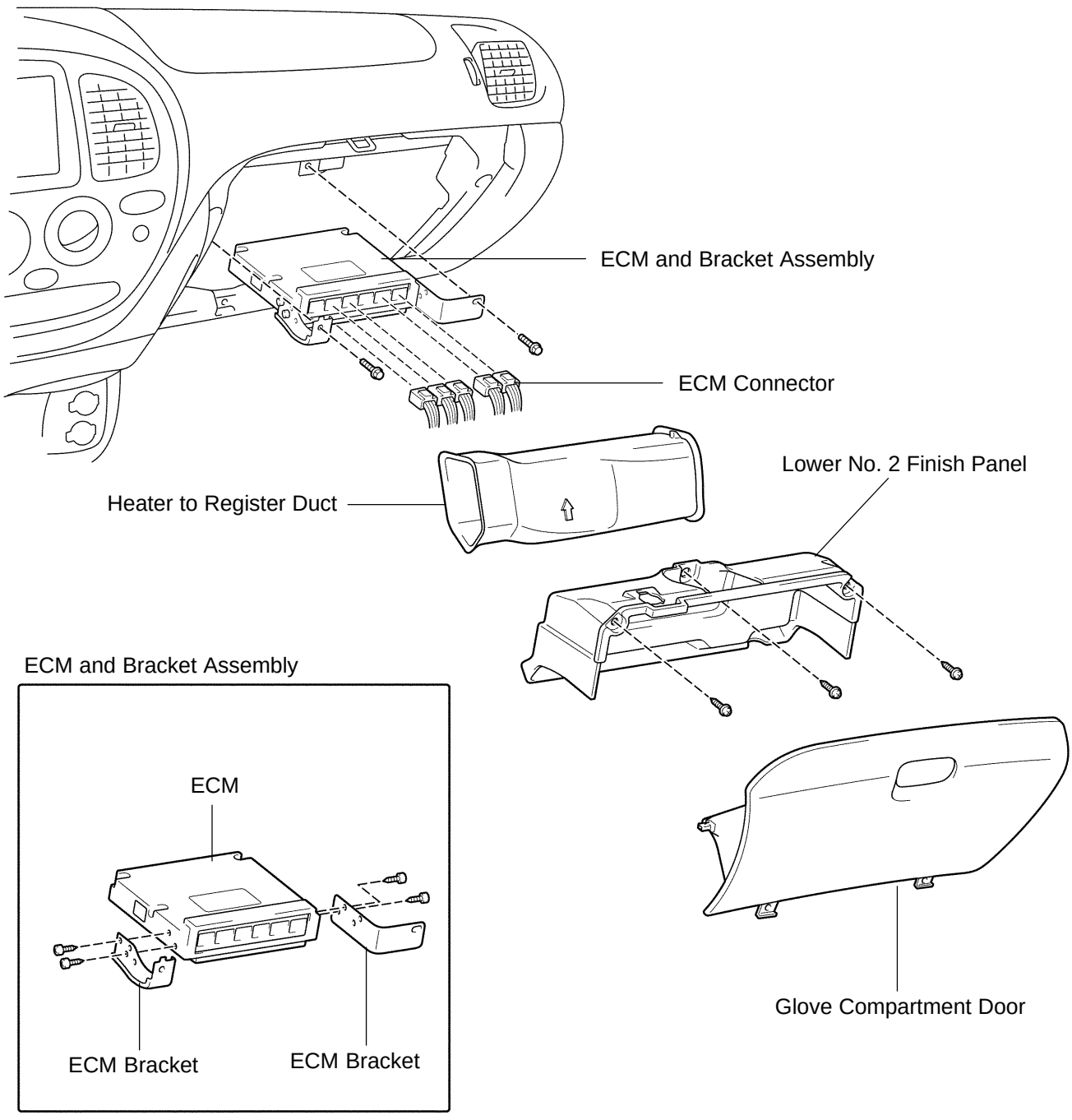

SF0Q1–11

INSPECTION

INSPECT ECM (See page DI–214)

FUEL CUT RPM

SF0Q2–13

INSPECTION

1. WARM UP ENGINE

Allow the engine to warm up to normal operating temperature.

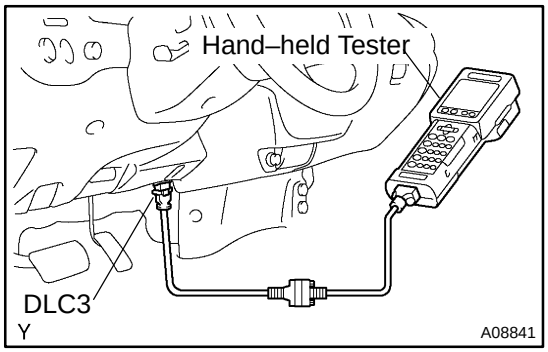

2. CONNECT HAND–HELD TESTER OR OBD II SCAN TOOL

(a) Connect a hand–held tester or OBD II scan tool to the DLC3.

(b) Please refer to the hand–held tester or OBD II scan tool operator's manual for further details.

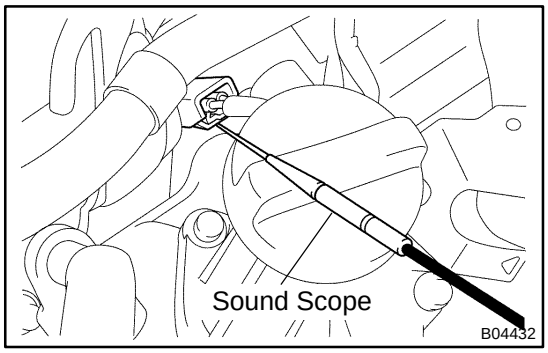

3. INSPECT FUEL CUTOFF RPM OPERATION

(a) Increase the engine speed to at least 2,500 rpm.

(b) Check for injector operating noise.

(c) Check that when the throttle lever is released, injector operation noise stops momentarily and then resumes.

HINT:

▲ The vehicle should be stopped.

▲ Measure with the A/C OFF.

Fuel return speed: 1,000 rpm

4. DISCONNECT HAND–HELD TESTER OR OBD II SCAN TOOL

STARTING SYSTEM

ST08A–01

ON–VEHICLE INSPECTION

NOTICE:

Before changing the starter, check these items again:

- **Connector connection**
- **Accessory installation, e.g.: theft deterrent system**

STARTER

COMPONENTS

ST036–05

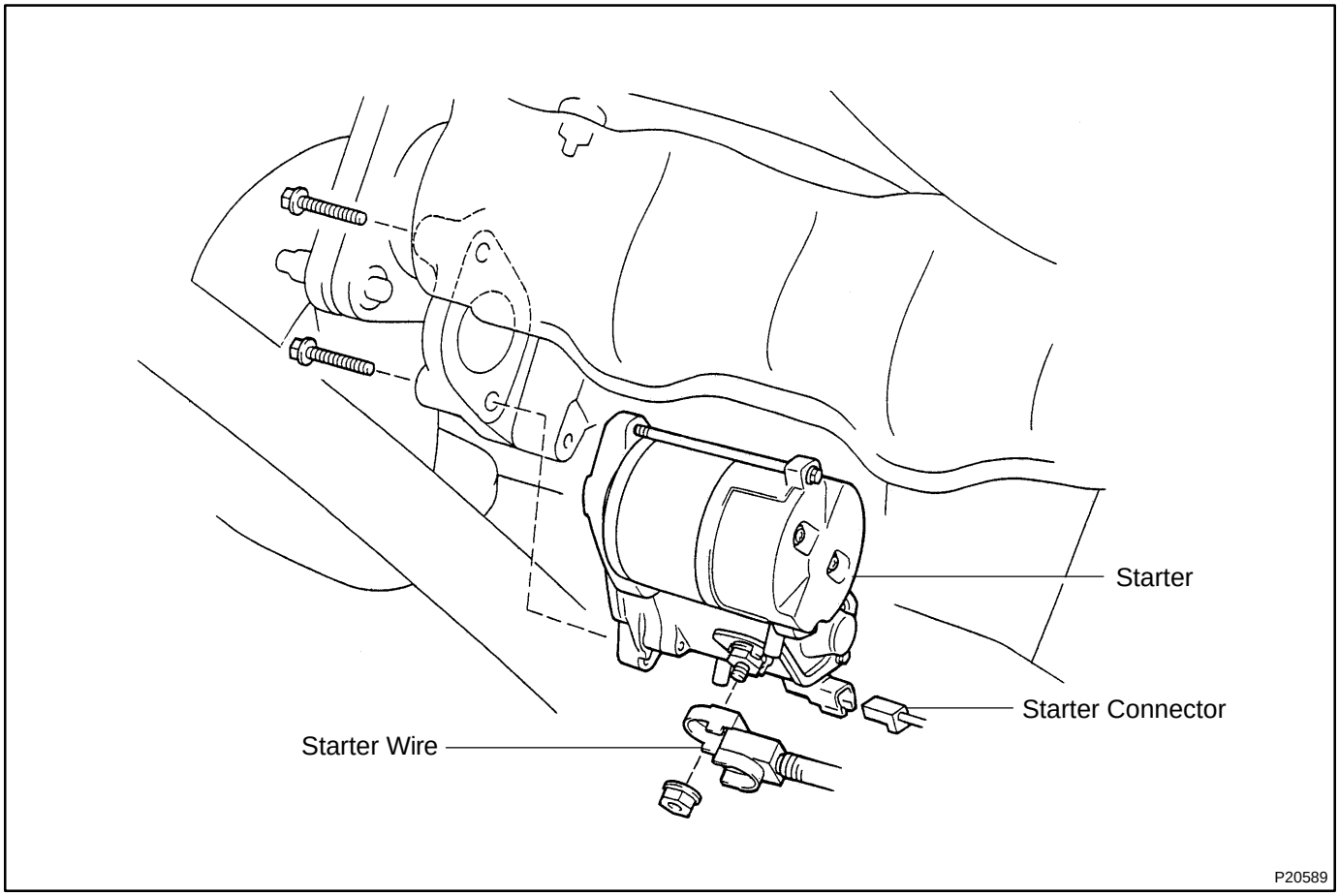

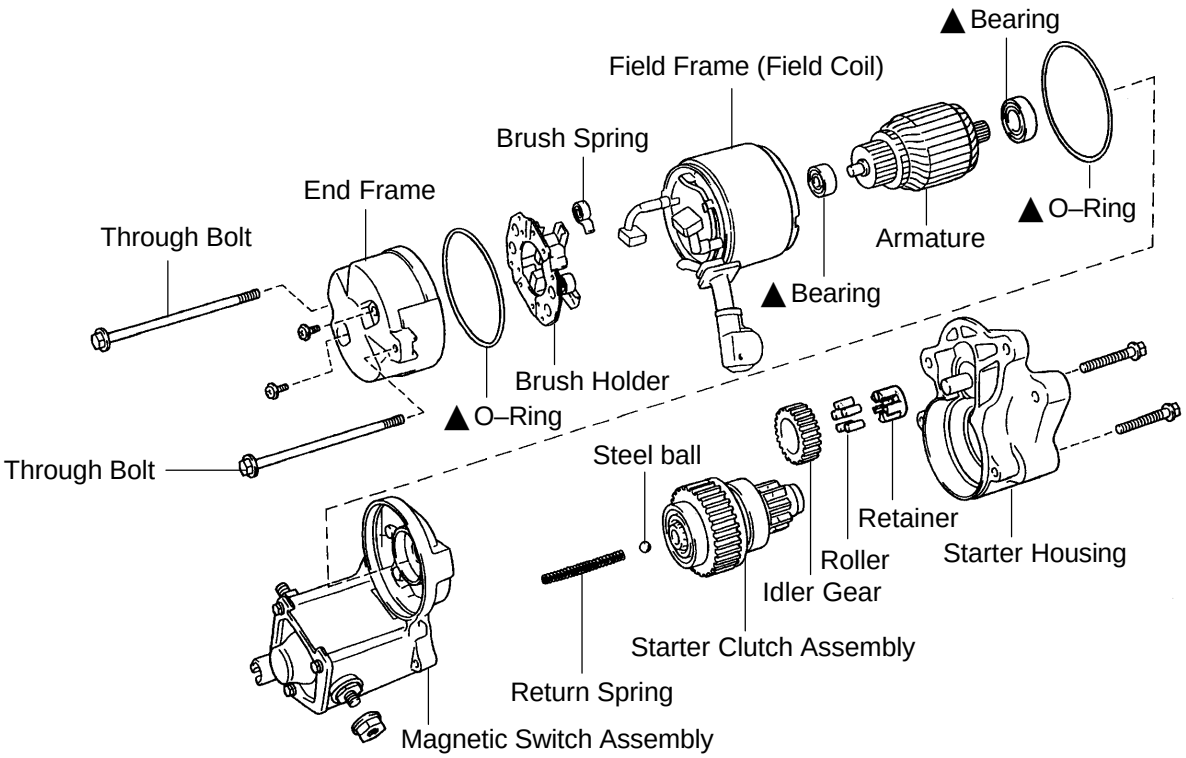

Magnetic Switch Assembly

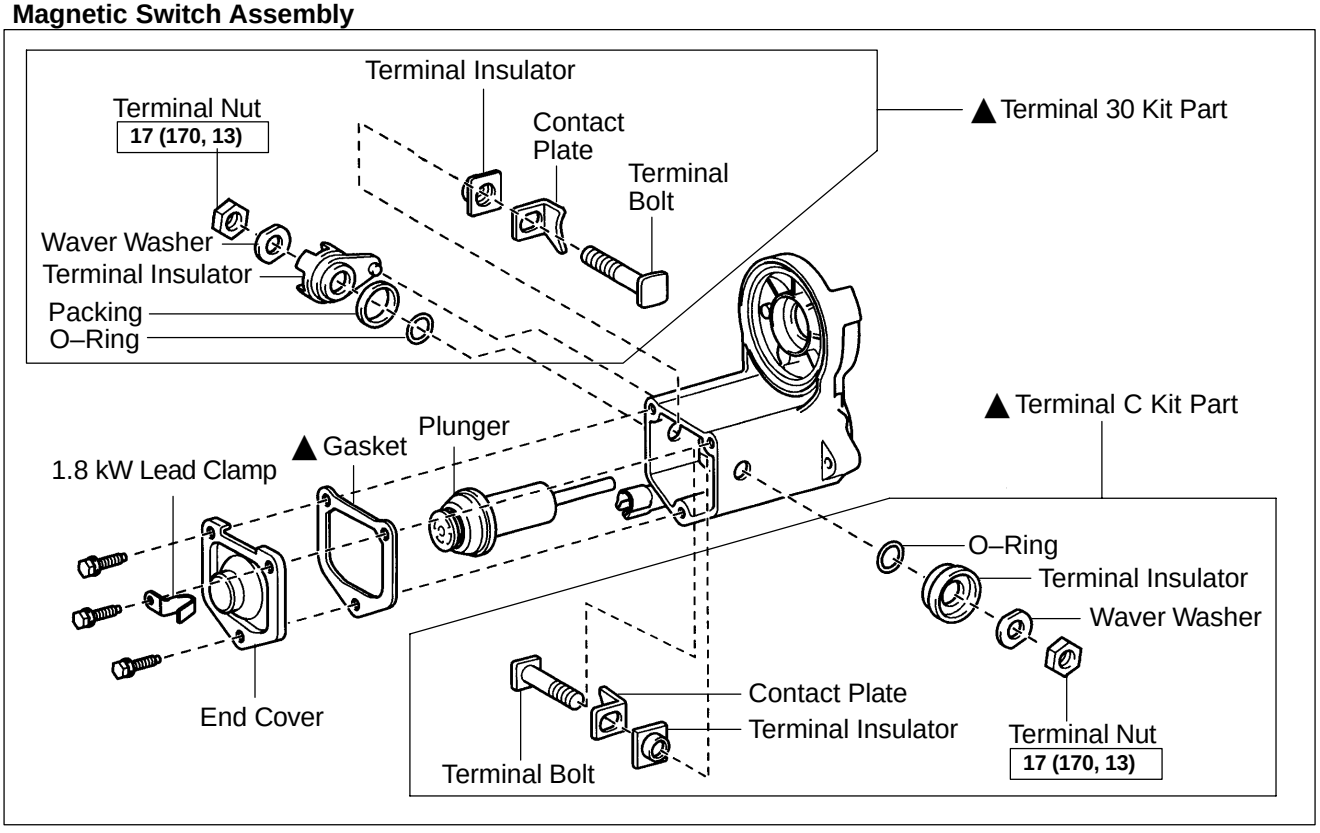

N·m (kgf·cm, ft·lbf) : Specified torque
▲ Non–reusable part

B07950

ST037–05

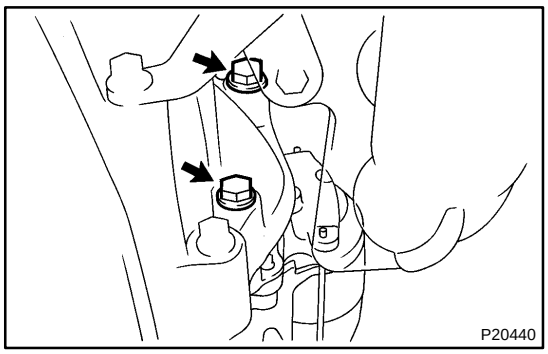

REMOVAL

REMOVE STARTER

(a) Disconnect the starter connector.
(b) Remove the nut, and disconnect the starter wire.
(c) Remove the 2 bolts and starter.

ST038–05

DISASSEMBLY

1. REMOVE FIELD FRAME AND ARMATURE

(a) Remove the nut, and disconnect the lead wire from the magnetic switch terminal.
Torque: 5.9 N·m (60 kgf·cm, 52 in.·lbf)

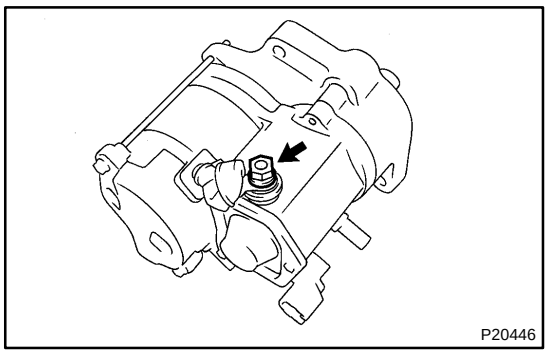

(b) Remove the 2 through bolts.
Torque:
1.2 kW, 1.4 kW type: 5.9 N·m (60 kgf·cm, 52 in.·lbf)
1.8 kW type: 9.3 N·m (95 kgf·cm, 82 in.·lbf)

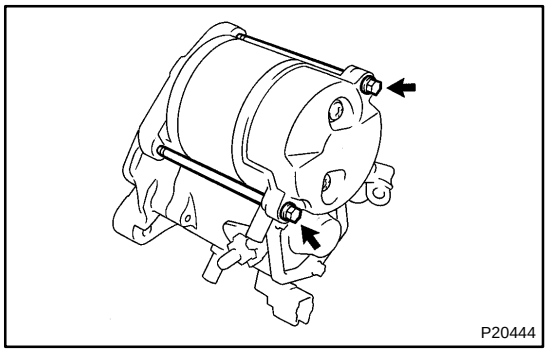

(c) Pull out the field frame with the armature from the magnetic switch assembly.

NOTICE:
At the time of assembly, align the protrusion of the field frame with cutout of the magnetic switch.

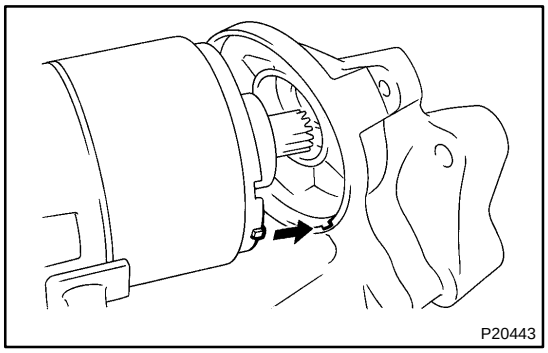

(d) Remove the O–ring.

HINT:
At the time of assembly,use a new O–ring.

2. REMOVE STARTER HOUSING, CLUTCH ASSEMBLY AND GEAR

(a) Remove the 2 screws.
Torque:
1.2 kW, 1.4 kW type: 5.9 N·m (60 kgf·cm, 52 in.·lbf)
1.8 kW type: 9.3 N·m (95 kgf·cm, 82 in.·lbf)

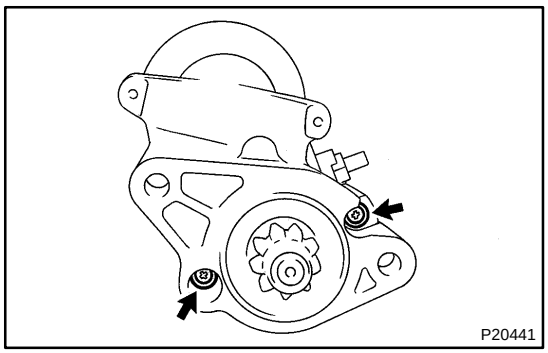

(b) Remove the starter housing, return spring, bearing, idler gear and clutch assembly from the magnetic switch assembly.

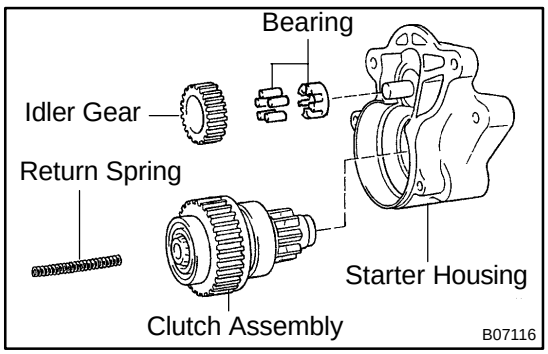

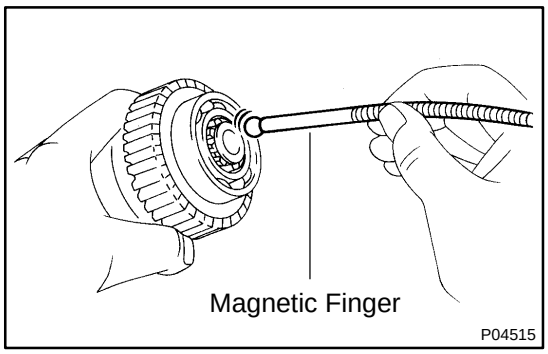

3. REMOVE STEEL BALL

Using a magnetic finger, remove the steel ball from the clutch shaft hole.

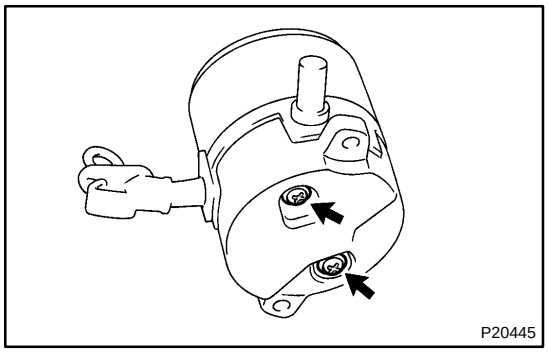

4. REMOVE BRUSH HOLDER

(a) Remove the 2 screws and end cover from the field frame.
Torque:
1.2 kW, 1.4 kW type: 1.5 N·m (15 kgf·cm, 13 in.·lbf)
1.8 kW type: 3.8 N·m (38 kgf·cm, 34 in.·lbf)

(b) Remove the O–ring from the field frame.

HINT:
At the time of assembly,use a new O–ring.

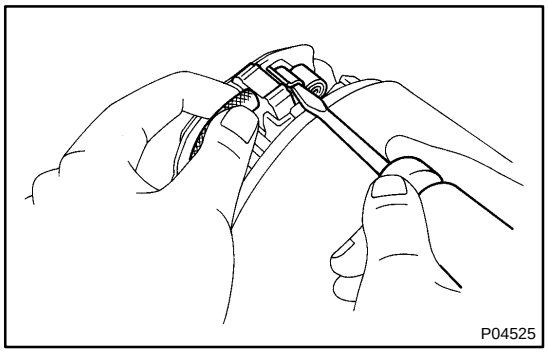

(c) Using a screwdriver, hold the spring back and disconnect the brush from the brush holder.
Disconnect the 4 brushes, and remove the brush holder.

5. REMOVE ARMATURE FROM FIELD FRAME

ST0GH–02

INSPECTION

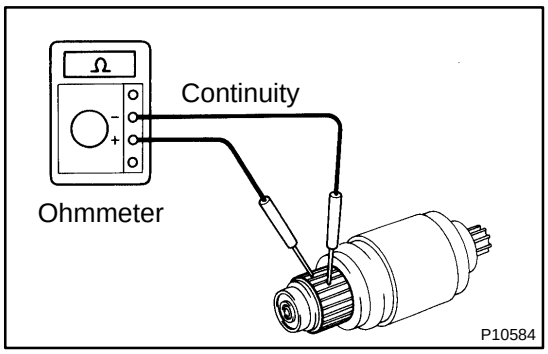

1. INSPECT ARMATURE COIL FOR OPEN CIRCUIT

Using an ohmmeter, check that there is continuity between the segments of the commutator.

If there is no continuity between any segment, replace the armature.

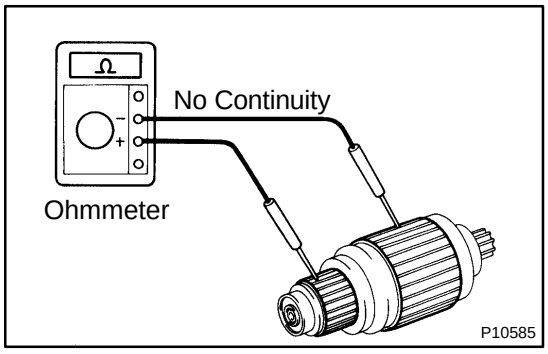

2. INSPECT ARMATURE COIL FOR GROUNDED

Using an ohmmeter, check that there is no continuity between the commutator and armature coil core.

If there is continuity, replace the armature.

3. INSPECT COMMUTATOR FOR DIRTY AND BURNT SURFACES

If the surface is dirty or burnt, clean it with sandpaper (No.400) or on a lathe.

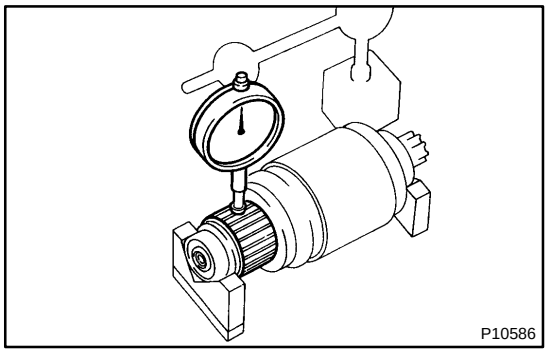

4. INSPECT COMMUTATOR CIRCLE RUNOUT

(a) Place the commutator on V–blocks.

(b) Using a dial indicator, measure the circle runout.

Maximum circle runout: 0.05 mm (0.0020 in.)

If the circle runout is greater than maximum, correct it on a lathe.

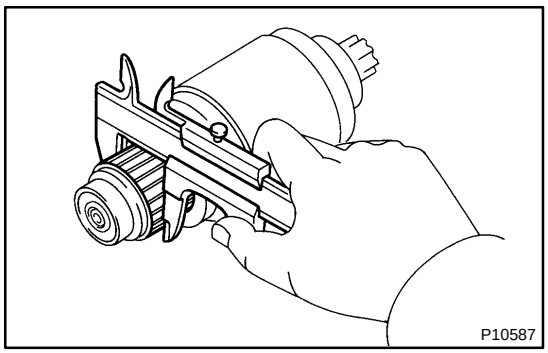

5. INSPECT COMMUTATOR DIAMETER

Using vernier calipers, measure the commutator diameter.

Standard diameter:

1.2 kW, 1.4 kW type	30 mm (1.18 in.)
1.8 kW type	35 mm (1.38 in.)

Minimum diameter:

1.2 kW, 1.4 kW type	29 mm (1.14 in.)
1.8 kW type	34 mm (1.34 in.)

If the diameter is less than minimum, replace the armature.

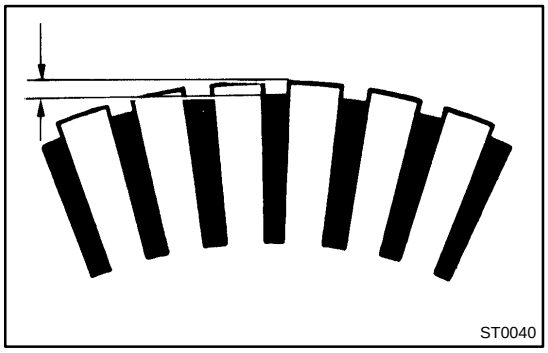

6. INSPECT UNDERCUT DEPTH OF SEGMENT

Check that the undercut depth is clean and free of foreign material. Smooth out the edge.

Standard undercut depth:

1.2 kW, 1.4 kW type	0.6 mm (0.024 in.)
1.8 kW type	0.7 mm (0.028 in.)

Minimum undercut depth: 0.2 mm (0.008 in.)

If the undercut depth is less than minimum, correct it with a hacksaw blade.

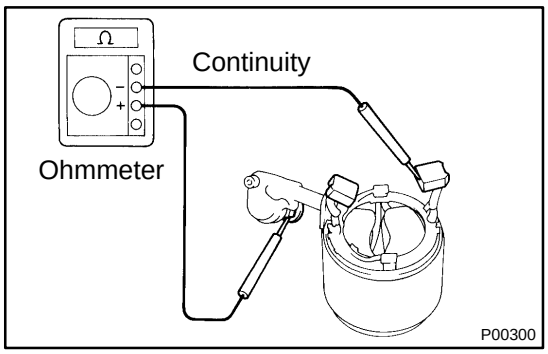

7. INSPECT FIELD COIL FOR OPEN CIRCUIT

Using an ohmmeter, check that there is continuity between the lead wire and field coil brush lead.

If there is no continuity, replace the field frame.

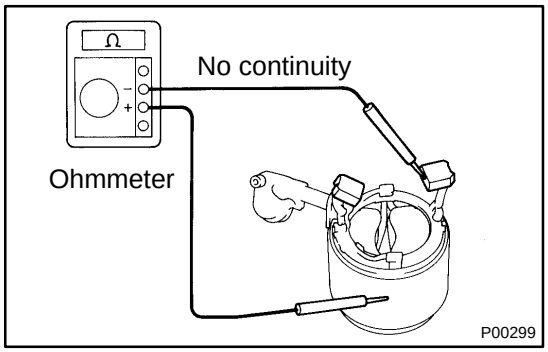

8. INSPECT THAT FIELD COIL IS NOT GROUNDED

Using an ohmmeter, check that there is no continuity between the field coil end and field frame.

If there is continuity, repair or replace the field frame.

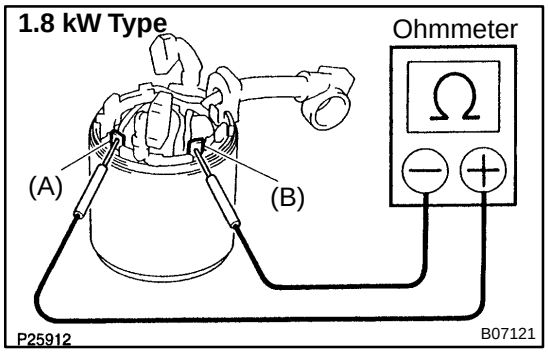

9. 1.8 kW type:
INSPECT SHUNT COIL FOR OPEN CIRCUIT

Using an ohmmeter, measure the resistance between shunt coil terminals (A) and (B).

Resistance: 1.5 – 1.9 Ω at 20˚C (68˚F)

If the resistance is not as specified, replace the field frame.

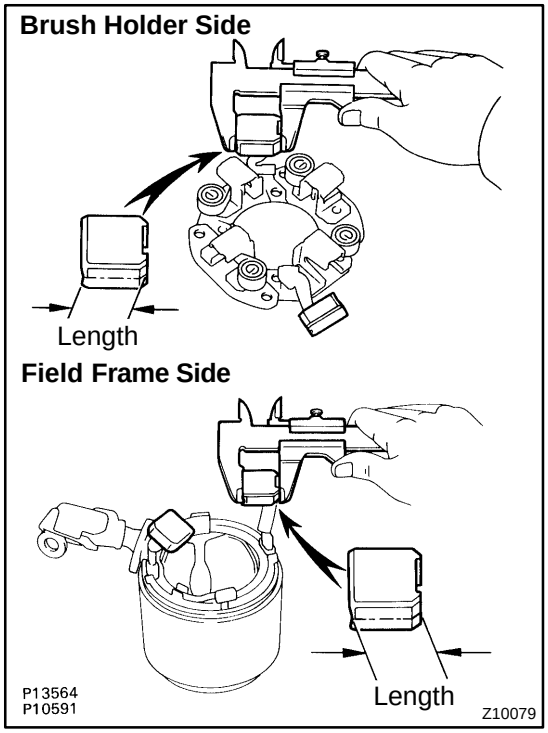

10. INSPECT BRUSH LENGTH

Using vernier calipers, measure the brush length.

Standard length:

1.2 kW, 1.4 kW type	15.5 mm (0.610 in.)
1.8 kW type	15.0 mm (0.591 in.)

Minimum length:

1.2 kW, 1.4 kW type	10.0 mm (0.394 in.)
1.8 kW type	9.0 mm (0.354 in.)

If the length is less than minimum, replace the brush holder and field frame.

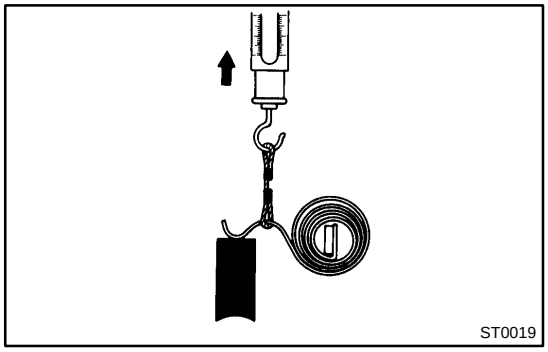

11. INSPECT BRUSH SPRING LOAD

Take the pull scale reading the instant the brush spring separates from the brush.

Standard installed load:

1.2 kW type	13.7 – 19.6 N (1.40 – 2.00 kgf, 3.1 – 4.4 lbf)
1.4 kW type	17.6 – 23.5 N (1.80 – 2.40 kgf, 4.0 – 5.3 lbf)
1.8 kW type	21.5 – 27.5 N (2.20 – 2.80 kgf, 4.9 – 6.2 lbf)

Minimum installed load:

1.2 kW type	9.8 N (1.00 kgf, 2.2 lbf)
1.4 kW type	11.8 N (1.20 kgf, 2.6 lbf)
1.8 kW type	12.7 N (1.30 kgf, 2.7 lbf)

If the installed load is less than minimum, replace the brush springs.

HINT:

Take the pull scale reading the instant the brush spring separates from the brush.

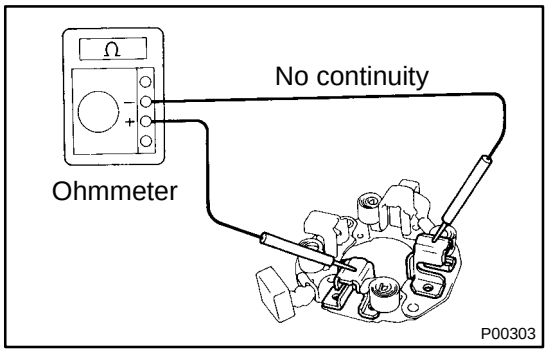

12. INSPECT INSULATION OF BRUSH HOLDER

Using an ohmmeter, check that there is no continuity between the positive (+) and negative (–) brush holders.

If there is continuity, repair or replace the brush holder.

13. INSPECT GEAR TEETH

Check the gear teeth on the pinion gear, idler gear and clutch assembly for wear or damage.

If damaged, replace the gear or clutch assembly.

If damaged, also check the flywheel or drive plate ring gear for wear or damage.

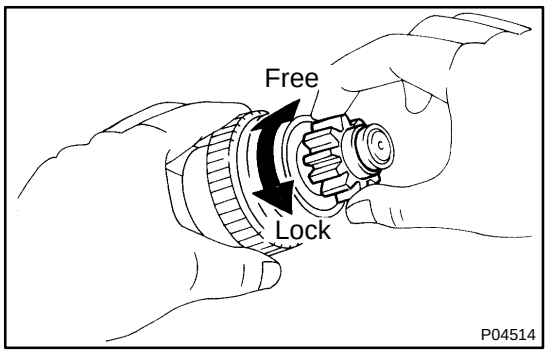

14. INSPECT CLUTCH

Hold the starter clutch and rotate the clutch pinion gear clockwise and check that it turns freely. Try to rotate the clutch pinion counterclockwise and check that it locks. If necessary, replace the clutch assembly.

15. INSPECT BEARINGS

Turn the bearing by hand while applying inward force.

If the resistance is felt or if the bearing sticks, replace the bearing.

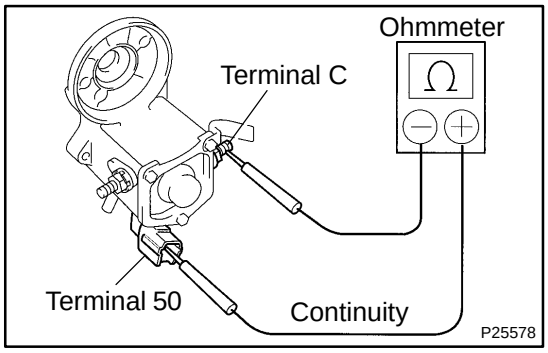

16. DO PULL–IN COIL OPEN CIRCUIT TEST

Using an ohmmeter, check that there is continuity between terminals 50 and C.

If there is no continuity, check and replace the magnetic switch.

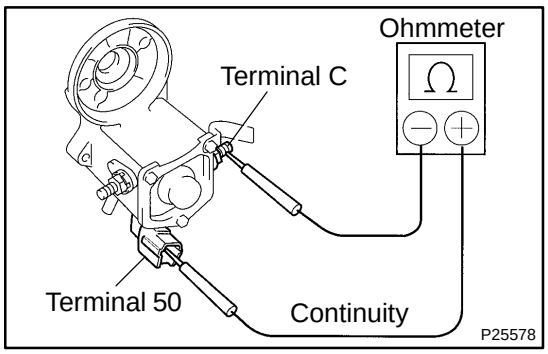

17. DO HOLD–IN COIL CIRCUIT TEST

Using an ohmmeter, check that there is continuity between terminal 50 and the switch body.

If there is no continuity, replace the magnetic switch assembly.

ST0GI–03

REPLACEMENT

1. REPLACE REAR BEARING

(a) Using SST, remove the bearing.
SST 09286–46011

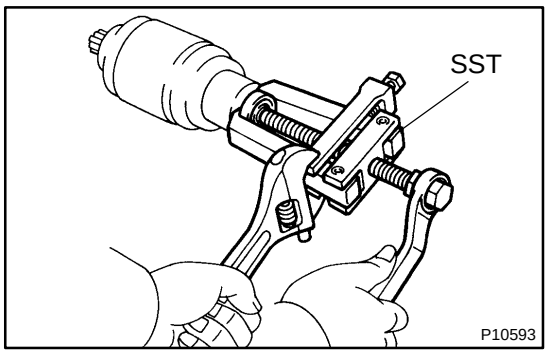

(b) Press in a new bearing.

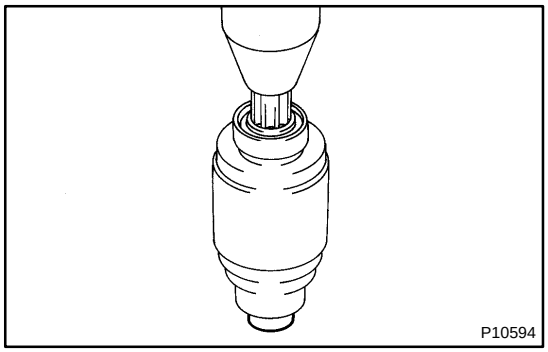

2. REPLACE FRONT BEARING

(a) Using SST, remove the bearing.
SST 09286–46011

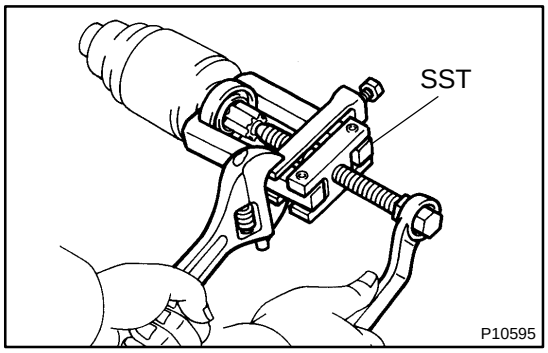

(b) Using SST and a press, press in a new bearing.
SST 09820–00031

NOTICE:

Be careful of the bearing installation direction.

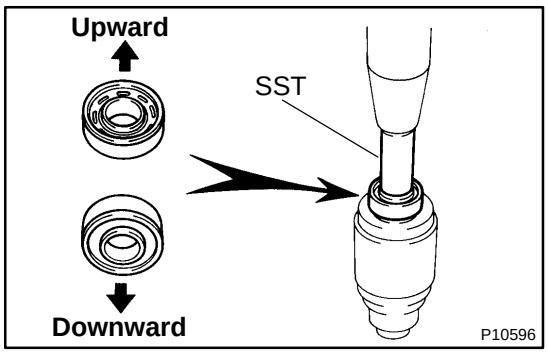

3. REPLACE MAGNETIC SWITCH TERMINAL KIT PARTS

(a) Remove magnetic switch end cover
Remove the 3 bolts, lead clamp (1.8 kW type), end cover, gasket and plunger.

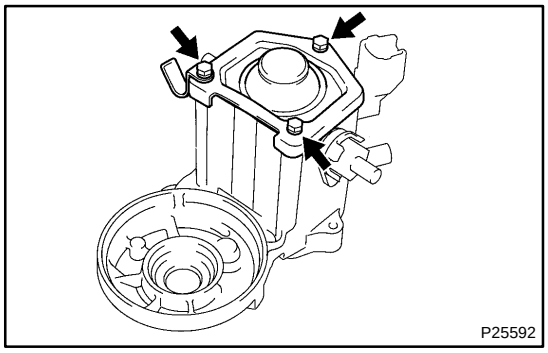

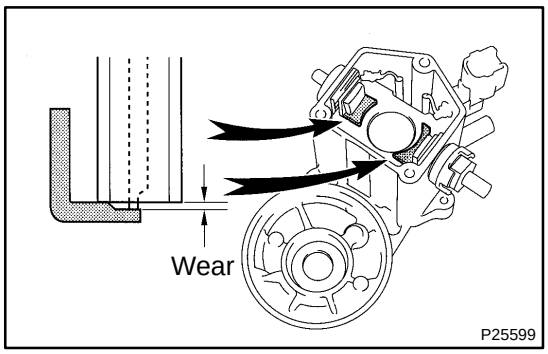

(b) Inspect the contact plate for wear.
Using vernier calipers, measure the contact plate for depth of wear.
Maximum wear: 0.9 mm (0.035 in.)

If the depth of wear is greater than the maximum, replace the contact plate.

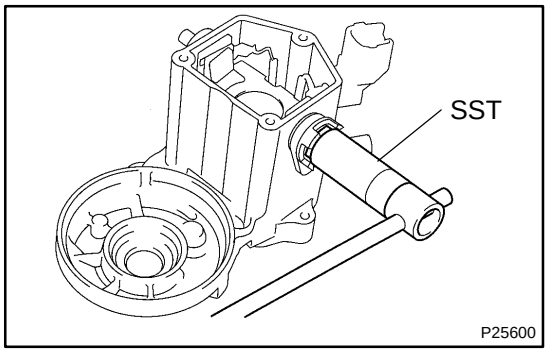

(c) Remove the terminal kit parts.
(1) Using SST, loosen the terminal nuts.
SST 09810–38140
(2) Terminal C:
Remove the terminal nut, wave washer, terminal insulator (outside), O–ring, terminal bolt, contact plate and terminal insulator (inside).
(3) Terminal 30:
Remove the terminal nut, wave washer, terminal insulator (outside), packing, O–ring, terminal bolt, contact plate, terminal insulator (inside) and insulation paper.

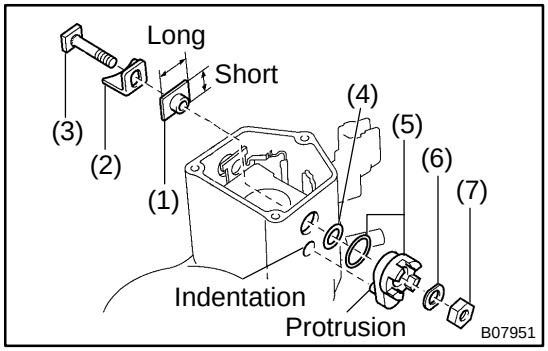

(d) Install new terminal 30 kit parts.
(1) Temporarily install new terminal insulator (inside).

NOTICE:
Be careful to install the terminal insulator in the correct direction.

(2) Temporarily install new contact plate.
(3) Temporarily install new terminal bolt.
(4) Temporarily install new O–ring.
(5) Temporarily install new packing and new terminal insulator (outside).
Install new packing to new terminal insulator, and install them.

HINT:
Match the protrusion of the insulator with the indentation of the housing.

(6) Temporarily install new wave washer.
(7) Temporarily install new terminal nut.

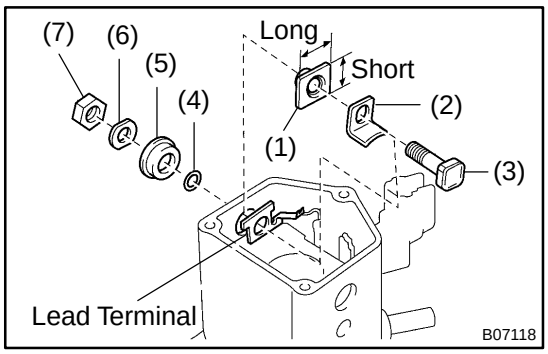

(e) Install new terminal C kit parts.
(1) Temporarily install new terminal insulator (inside).
(2) Temporarily install new contact plate.
(3) Temporarily install new terminal bolt.
(4) Temporarily install new O–ring.
(5) Temporarily install new terminal insulator (outside).
(6) Temporarily install new wave washer.
(7) Temporarily install new terminal nut.

NOTICE:

Be careful to install the terminal insulator (inside) in the correct direction.

(f) Temporarily tighten the terminal nuts.

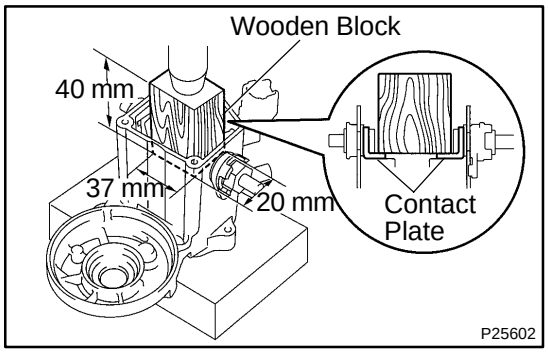

(g) Tighten the terminal nuts.
(1) Put a wooden block on the contact plate and press it down with a hand press.

Dimensions of wooden block:
20 x 37 x 40 mm (0.79 x 1.46 x 1.57 in.)
Press force: 981 N (100 kgf, 221 lbf)

NOTICE:

▲ **Check the diameter of the hand press ram. Then calculate the gauge pressure of the press when 981 N (100 kgf, 221 lbf) of force is applied.**

Gauge pressure:

$$(kgf/cm^2) = \frac{100\ kgf}{\left(\frac{\text{Ram diameter (cm)}}{2}\right)^2 \times 3.14\ (\pi)}$$

$$(psi) = \frac{221 lbf}{\left(\frac{\text{Ram diameter (in.)}}{2}\right)^2 \times 3.14\ (\pi)}$$

$$(kPa) = (kgf/cm^2) \times 98.1$$

$$(kPa) = (psi) \times 6.9$$

▲ **If the contact plate is not pressed down with the specified pressure, the contact plate may tilt due to coil deformation or the tightening of the nut.**

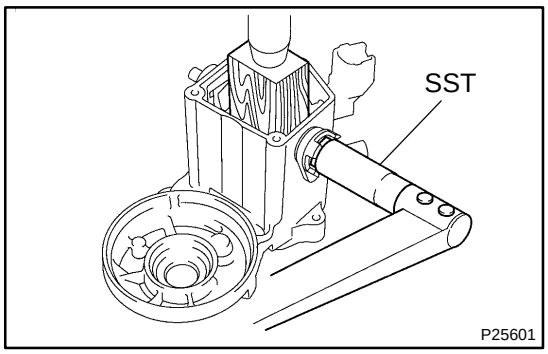

(2) Using SST, tighten the nuts to the specified torque.
SST 09810–38140
Torque: 17 N·m (170 kgf·cm, 13 ft·lbf)

NOTICE:
If the nut is over tightened, it may cause cracks on the inside of the insulator.

(h) Clean the contact surfaces of the remaining contact plate and plunger with a dry shop rag.

(i) Reinstall the plunger, new gasket, end cover and lead clamp (1.8 kW type) with the 3 bolts.
Torque:
1.2 kW, 1.4 kW type: 2.5 N·m (25 kgf·cm, 22 in.·lbf)
1.8 kW type: 3.6 N·m (35 kgf·cm, 30 in.·lbf)

ST03B–04

REASSEMBLY

Reassembly is in the reverse order of disassembly (See page ST–5).

HINT:

At the time of assembly,use high–temperature grease to lubricate the bearings, gears, return spring and steel ball when assembling the starter.

ST03C–04

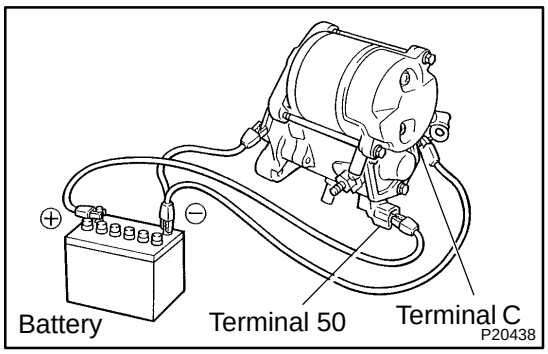

TEST

NOTICE:

These tests must be done within 3 to 5 seconds to avoid burning out the coil.

1. DO PULL–IN TEST

(a) Disconnect the field coil lead wire from terminal C.

(b) Connect the battery to the magnetic switch as shown. Check that the clutch pinion gear moves outward.

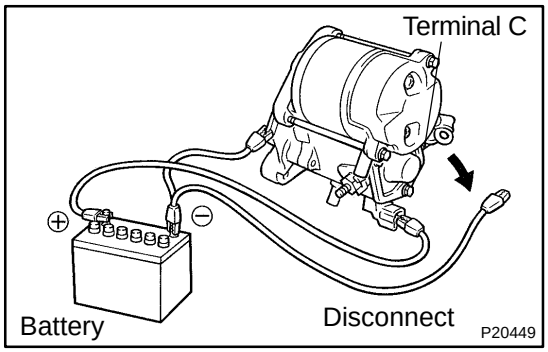

2. DO HOLD–IN TEST

With battery connected as above with the clutch pinion gear out, disconnect the negative (–) lead from terminal C. Check that the pinion gear remains out.

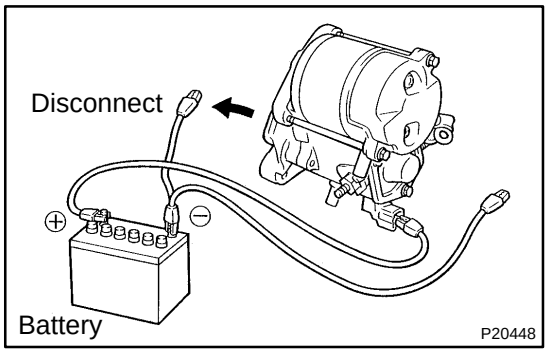

3. INSPECT CLUTCH PINION GEAR RETURN

Disconnect the negative (–) lead from the switch body. Check that the clutch pinion gear returns inward.

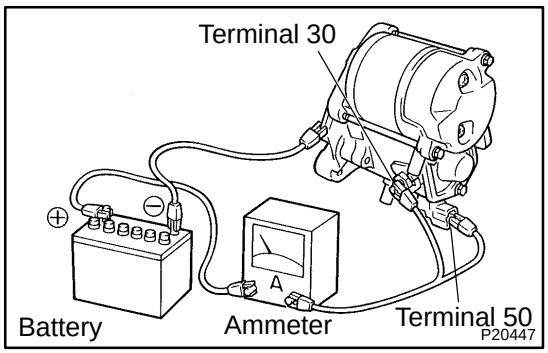

4. DO NO–LOAD PERFORMANCE TEST

(a) Connect the battery and ammeter to the starter as shown.

(b) Check that the starter rotates smoothly and steadily with the pinion gear moving out. Check that the ammeter reads the specified current.

Specified current:

1.2 kW, 1.4 kW type	90 A or less at 11.5 V
1.8 kW type	100 A or less at 11.5 V

ST0GJ–02

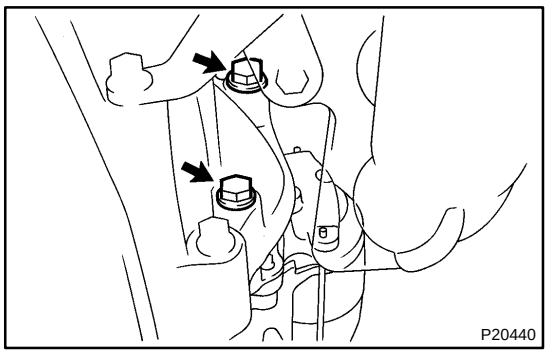

INSTALLATION

INSTALL STARTER

(a) Install the starter with the 2 bolts.
Torque: 39 N·m (400 kgf·cm, 29 ft·lbf)

(b) Connect the starter wire with the nut.
Torque: 8.8 N·m (90 kgf·cm, 78 in.·lbf)

(c) Connect the starter connector.

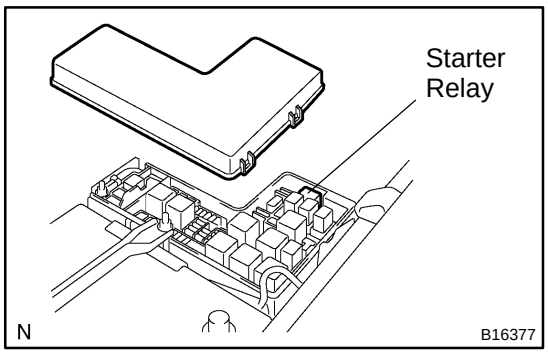

STARTER RELAY

ST08J–06

INSPECTION

1. **REMOVE RELAY BOX COVER**
2. **REMOVE STARTER RELAY (Marking: ST)**

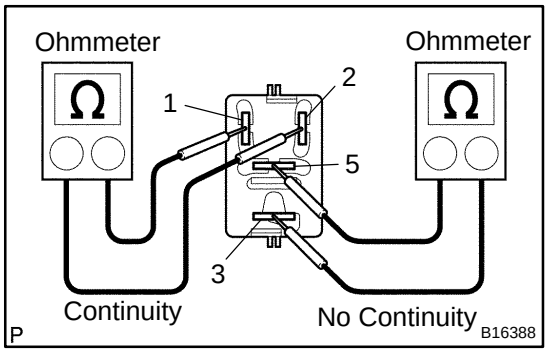

3. **INSPECT STARTER RELAY**

(a) Inspect the relay continuity.

(1) Using an ohmmeter, check that there is continuity between terminals 1 and 2.

If there is no continuity, replace the relay.

(2) Check that there is no continuity between terminals 3 and 5.

If there is continuity, replace the relay.

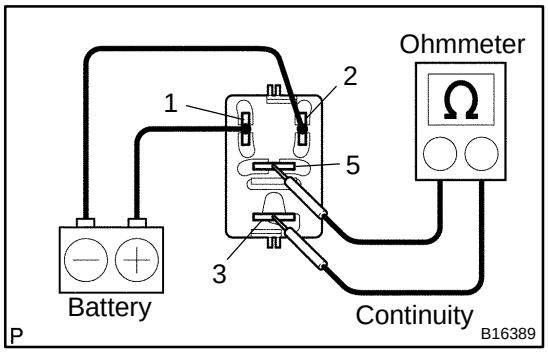

(b) Inspect the relay operation.

(1) Apply battery voltage across terminals 1 and 2.

(2) Using an ohmmeter, check that there is continuity between terminals 3 and 5.

If there is no continuity, replace the relay.

4. **REINSTALL RELAY BOX COVER**
5. **REINSTALL STARTER RELAY**

STARTING SYSTEM

ST08A–01

ON–VEHICLE INSPECTION

NOTICE:

Before changing the starter, check these items again:

- **Connector connection**
- **Accessory installation, e.g.: theft deterrent system**

STARTER

COMPONENTS

ST0GK–02

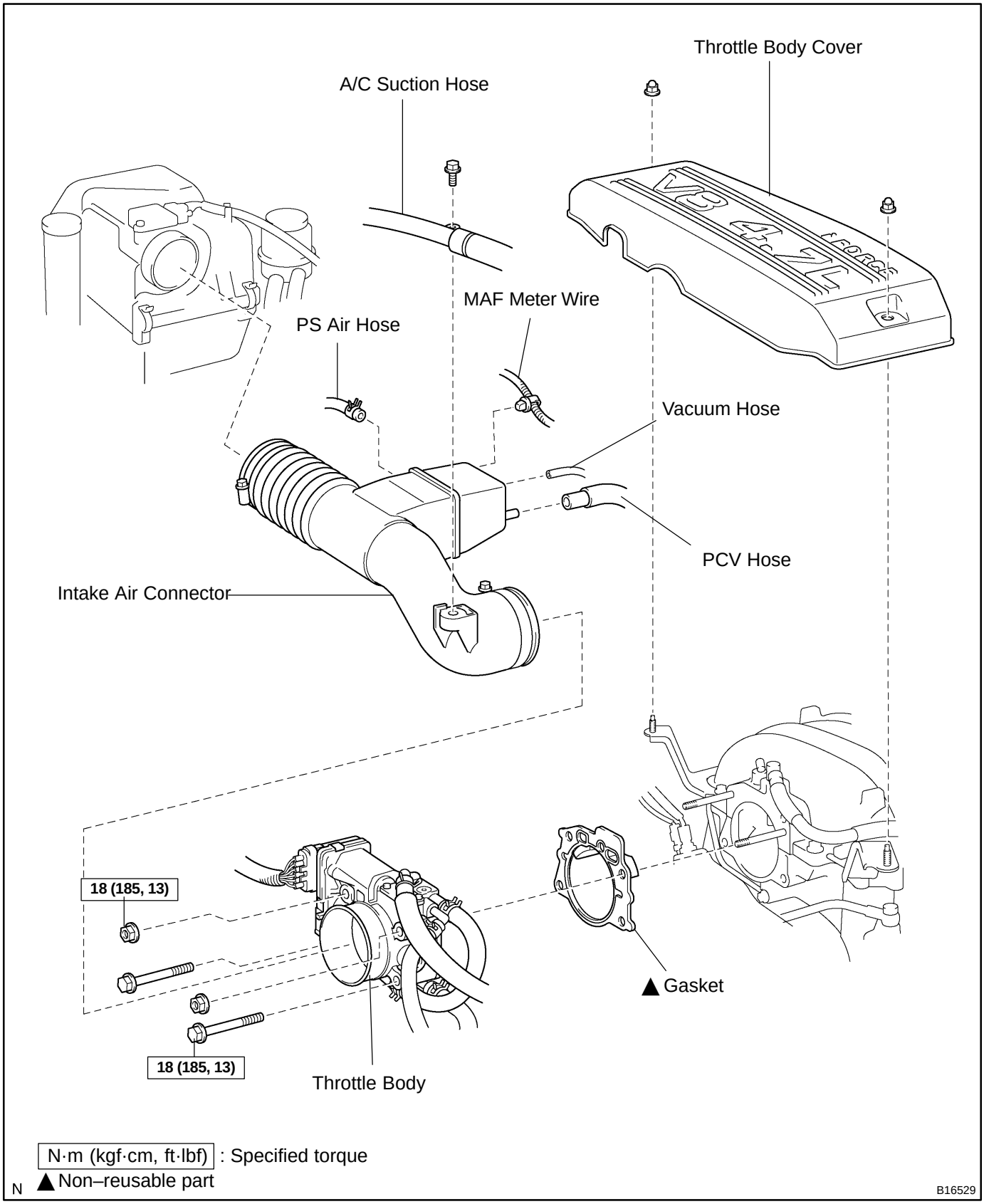

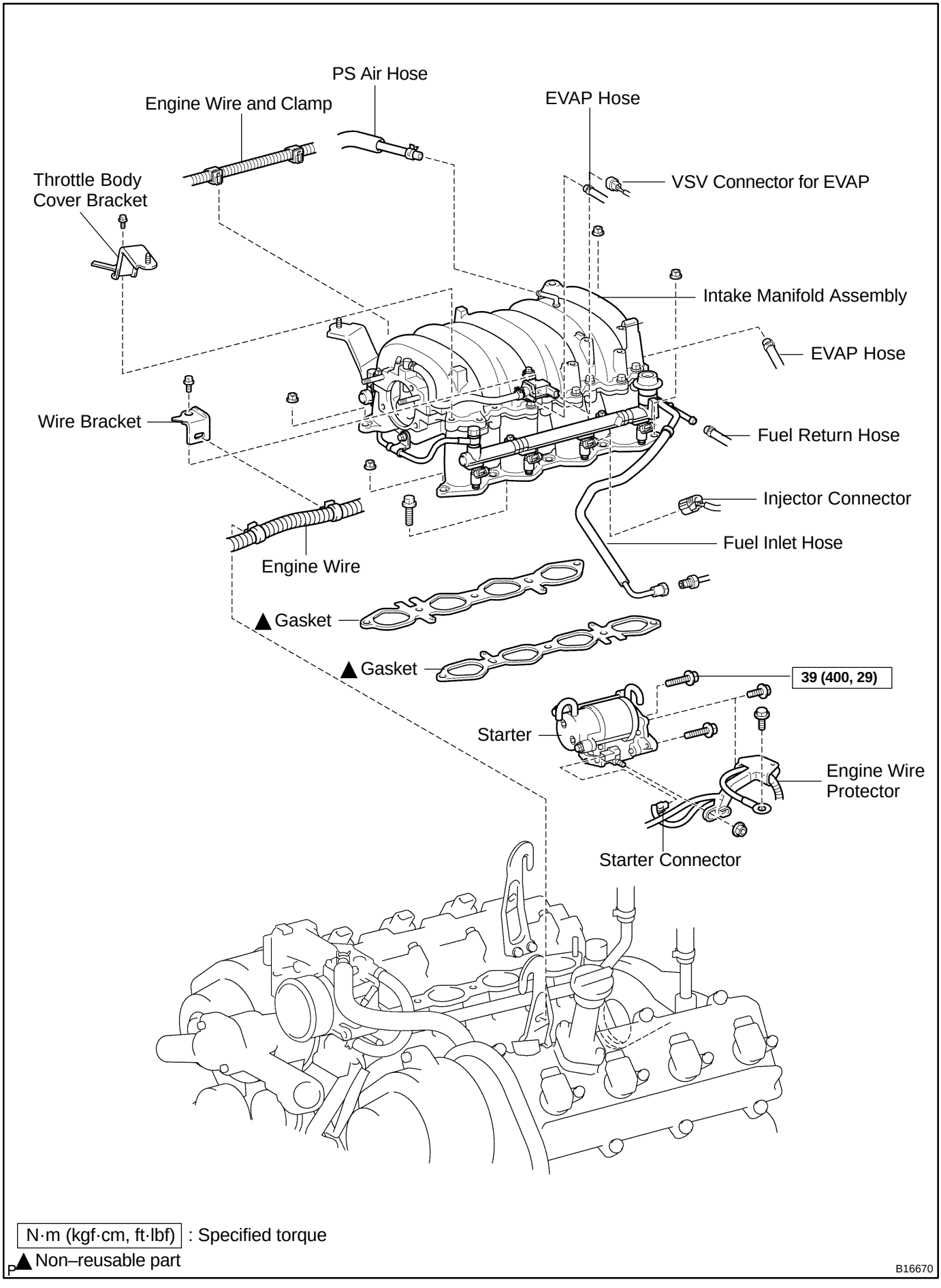
PS Air Hose
Engine Wire and Clamp
EVAP Hose
Throttle Body Cover Bracket
VSV Connector for EVAP
Intake Manifold Assembly
EVAP Hose
Wire Bracket
Fuel Return Hose
Injector Connector
Fuel Inlet Hose
Engine Wire
▲ Gasket
▲ Gasket
39 (400, 29)
Starter
Engine Wire Protector
Starter Connector
N·m (kgf·cm, ft·lbf) : Specified torque
▲ Non–reusable part
B16670

1.4 kW Type

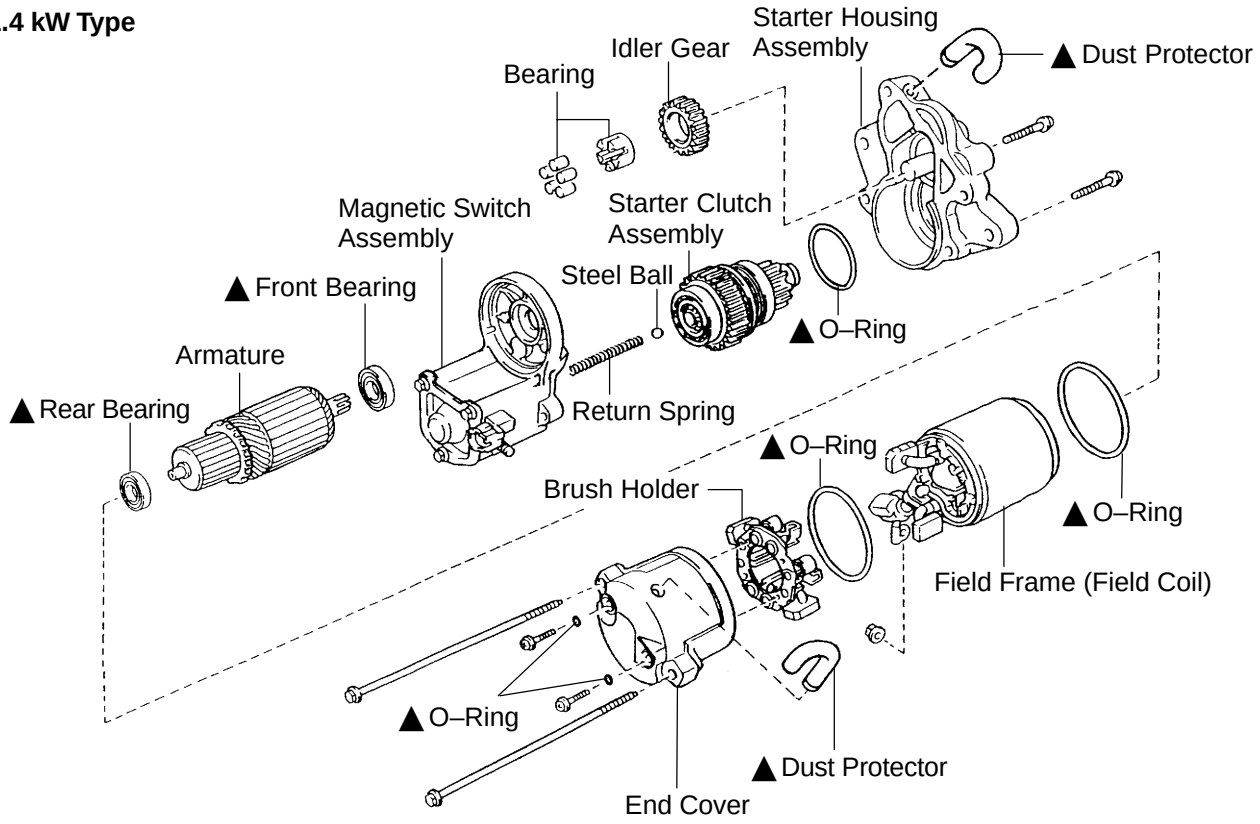

Magnetic Switch Assembly

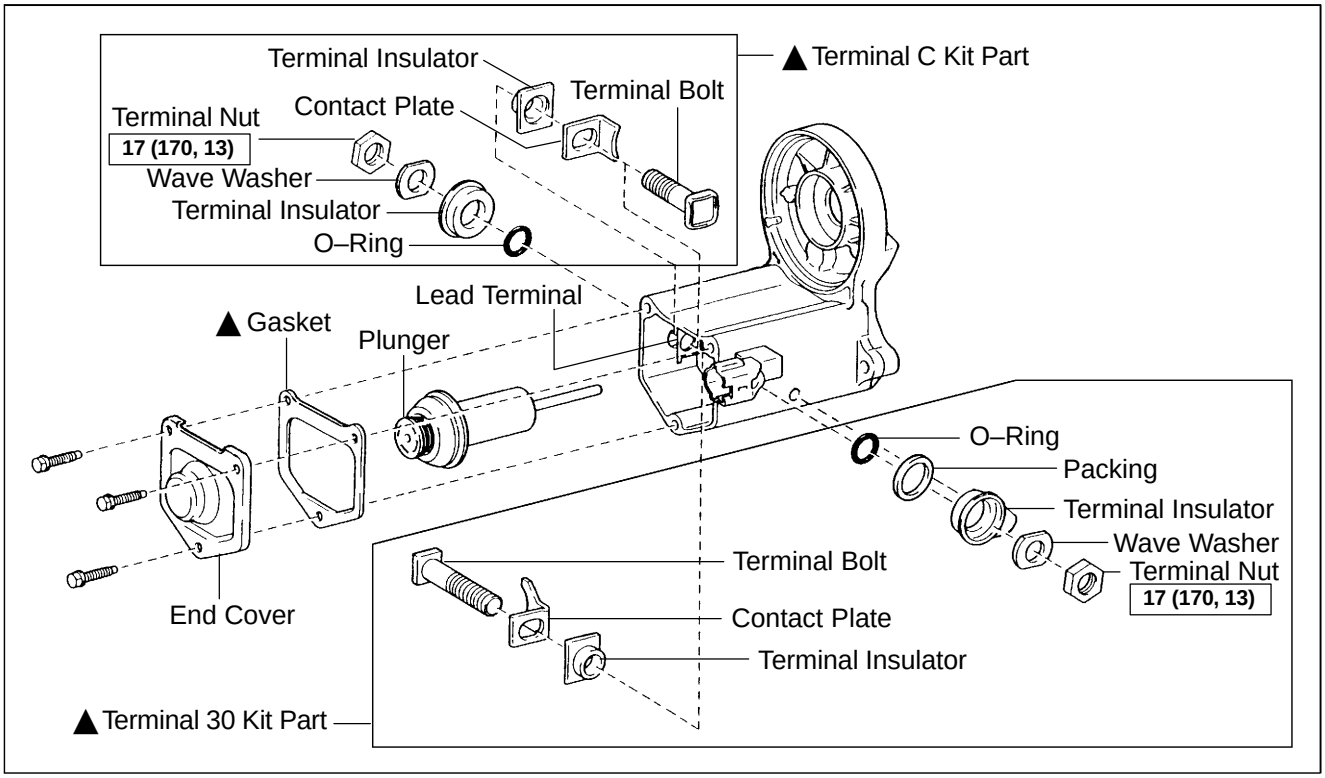

N·m (kgf·cm, ft·lbf) : Specified torque

▲ Non–reusable part

B04888

2.0 kW Type

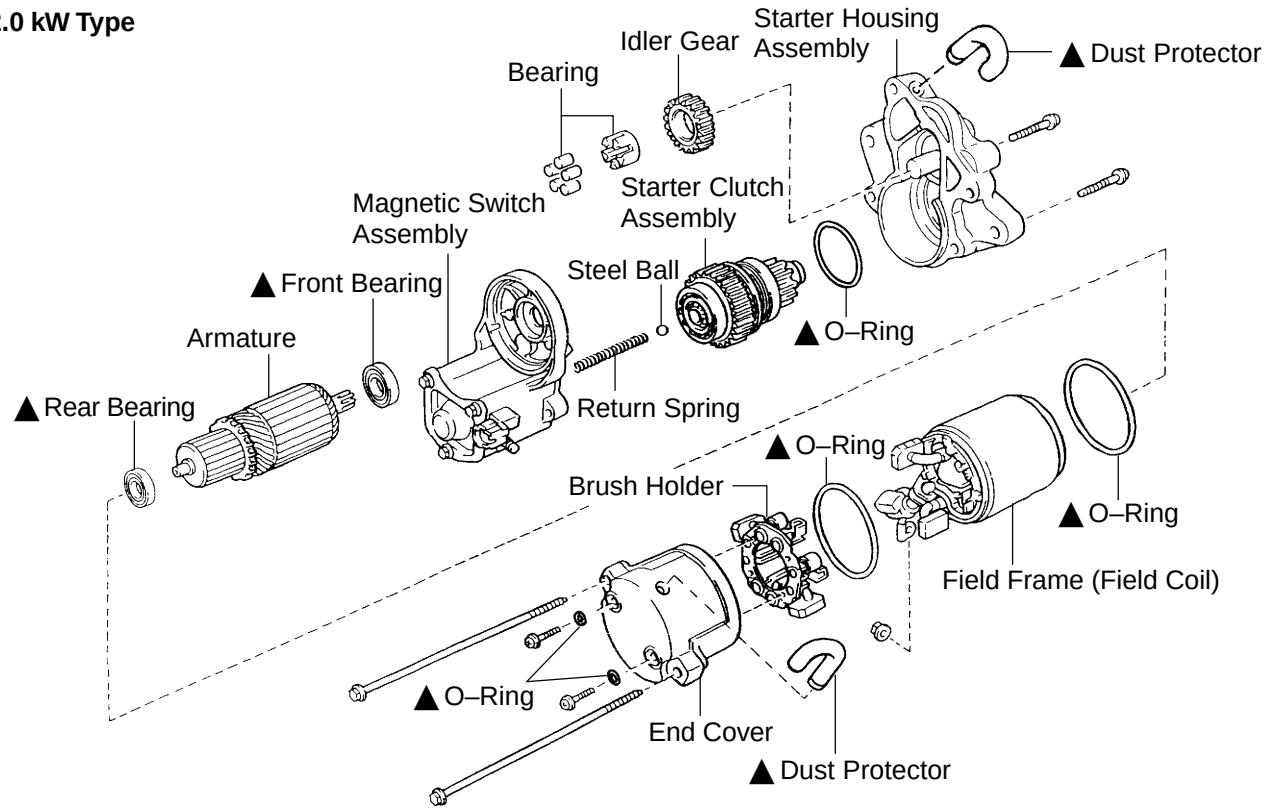

Magnetic Switch Assembly

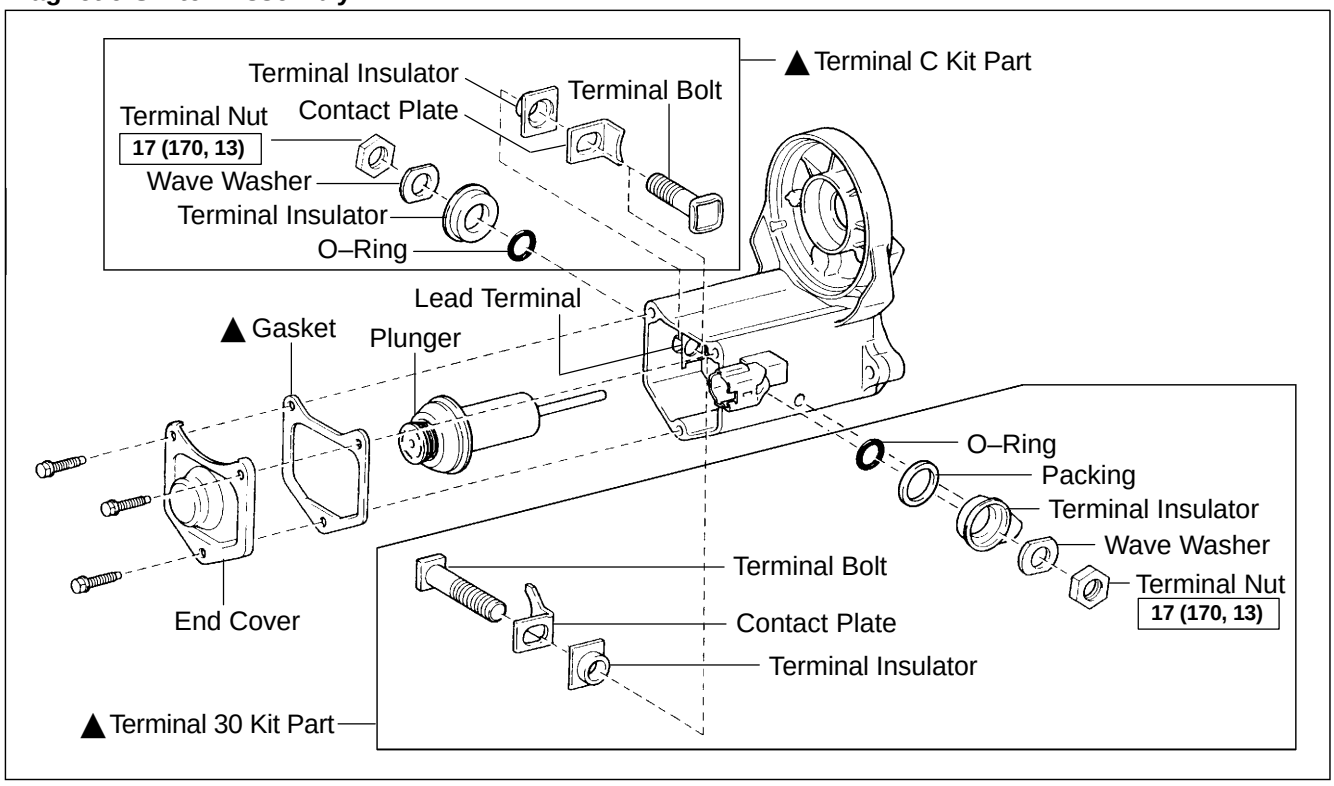

N·m (kgf·cm, ft·lbf) : Specified torque
▲ Non–reusable part

B04547

ST08C–03

REMOVAL

1. **REMOVE THROTTLE BODY COVER**
2. **DISCONNECT ACCELERATOR CABLE**
3. **REMOVE INTAKE AIR CONNECTOR**
4. **DISCONNECT THROTTLE BODY ASSEMBLY FROM INTAKE MANIFOLD (See pege SF–32)**
5. **REMOVE INTAKE MANIFOLD ASSEMBLY (See page EM–34)**

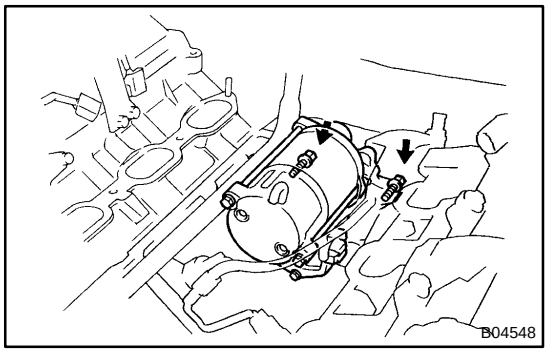

6. **REMOVE STARTER**

(a) Remove the 2 bolts holding the starter to the cylinder block.

(b) Disconnect the starter from the cylinder block.

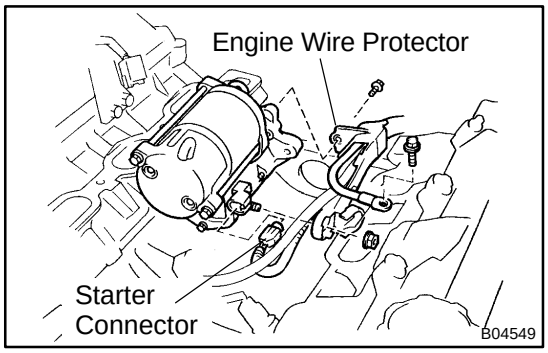

(c) Disconnect the starter connector.

(d) Remove the nut, bolt and disconnect the starter wire.

(e) Remove the bolt, and disconnect the engine wire protector from the starter.

(f) Remove the starter.

ST08D–03

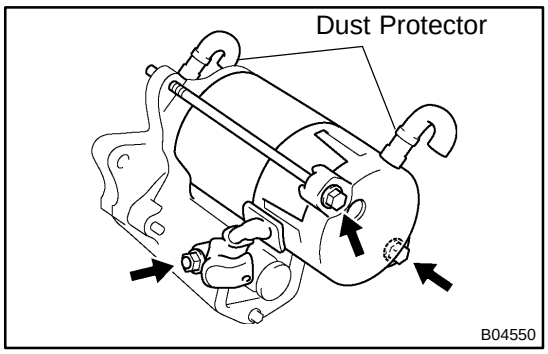

DISASSEMBLY

1. REMOVE 2 DUST PROTECTORS

2. REMOVE FIELD FRAME AND ARMATURE

(a) Remove the nut, and disconnect the lead wire from the magnetic switch terminal.
Torque: 5.9 N·m (60 kgf·cm, 52 in.·lbf)

(b) Remove the 2 through bolts.
Torque:
1.4 kW type: 5.9 N·m (60 kgf·cm, 52 in.·lbf)
2.0 kW type: 9.3 N·m (95 kgf·cm, 82 in.·lbf)

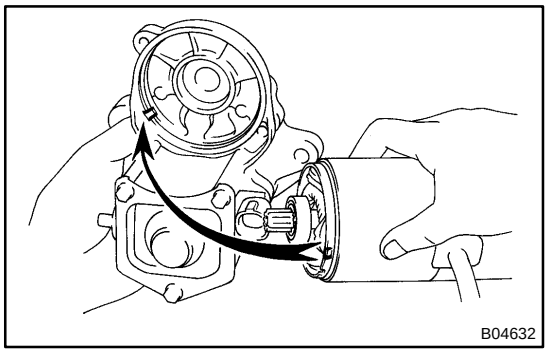

(c) Pull out the field frame together with the armature from the magnetic switch assembly.

NOTICE:
At the time of notice, please refer to the following items.
Align the protrusion of the field frame with the groove of the magnetic switch.

(d) Remove the O–ring from the field frame.

HINT:
At the time of assembly, please refer to the following items.
Use a new O–ring.

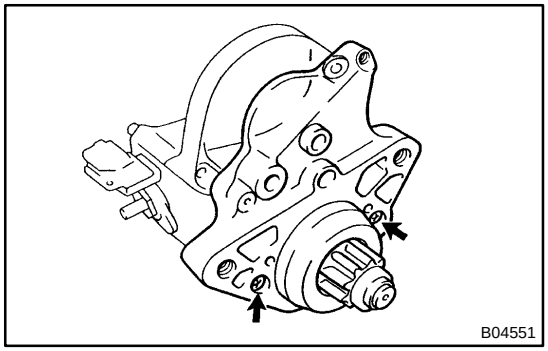

3. REMOVE STARTER HOUSING, CLUTCH ASSEMBLY AND GEAR

(a) 1.4 kW type:
Remove the 2 bolts.
Torque: 5.9 N·m (60 kgf·cm, 52 in.·lbf)

(b) 2.0 kW type:
Remove the 2 screws.
Torque: 9.3 N·m (95 kgf·cm, 82 in.·lbf)

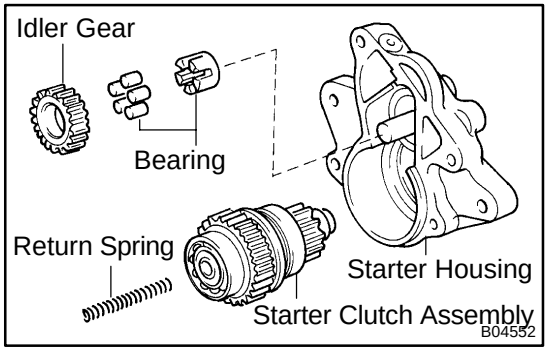

(c) Remove the starter housing, return spring, idler gear, bearing and starter clutch assembly.

HINT:
At the time of assembly, please refer to the following item.
Apply grease to the return spring and insert the return spring into the clutch shaft hole.

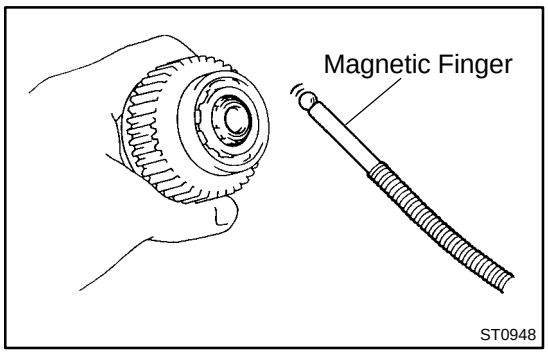

4. REMOVE STEEL BALL

Using a magnetic finger, remove the steel ball from the clutch shaft hole.

HINT:

At the time of assembly, please refer to the following item.

Apply grease to the steel ball and insert the steel ball into the clutch shaft hole.

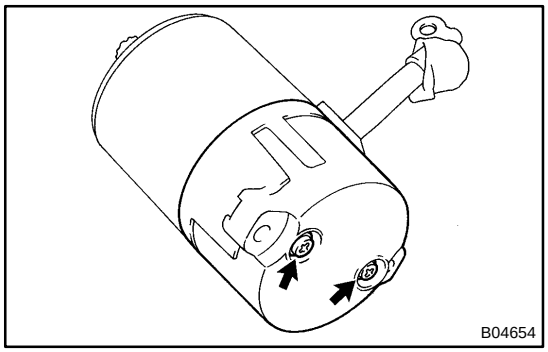

5. REMOVE BRUSH HOLDER

(a) Remove the 2 screws w/ O–ring and end cover from the field frame.

Torque:

1.4 kW type: 1.5 N·m (15 kgf·cm, 13 in.·lbf)

2.0 kW type: 3.8 N·m (39 kgf·cm, 34 in.·lbf)

(b) Remove the O–ring from the field frame.

HINT:

At the time of assembly, please refer to the following item.

Use a new O–ring.

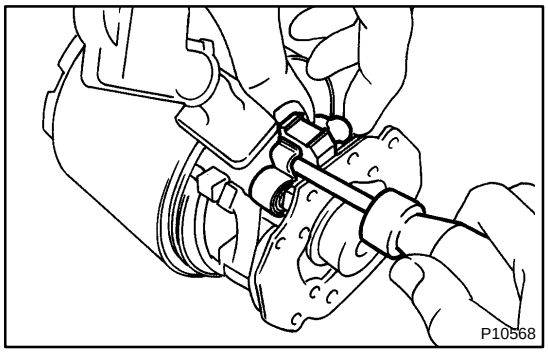

(c) Using a screwdriver, hold the spring back and disconnect the brush from the brush holder. Disconnect the 4 brushes, and remove the brush holder.

NOTICE:

Check that the positive (+) lead wires are not grounded.

6. REMOVE ARMATURE FROM FIELD FRAME

ST0GL–02

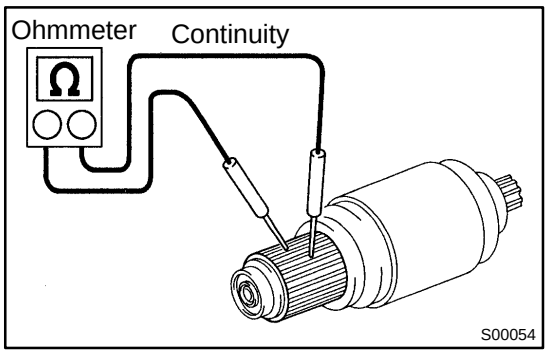

INSPECTION

1. INSPECT COMMUTATOR FOR OPEN CIRCUIT

Using an ohmmeter, check that there is continuity between the segments of the commutator.

If there is no continuity between any segment, replace the armature.

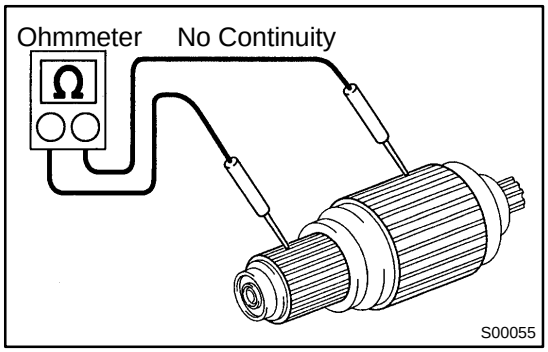

2. INSPECT COMMUTATOR FOR GROUND

Using an ohmmeter, check that there is no continuity between the commutator and armature coil core.

If there is continuity, replace the armature.

3. INSPECT COMMUTATOR FOR DIRTY AND BURNT SURFACE

If the surface is dirty or burnt, correct it with sandpaper (No.400) or on a lathe.

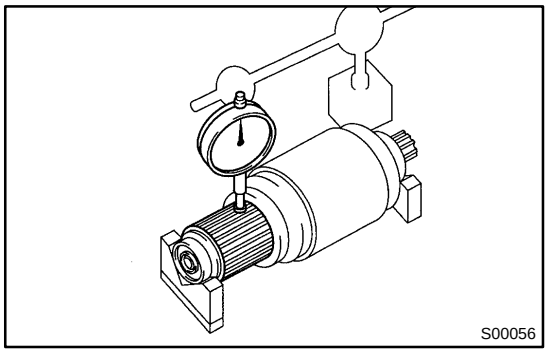

4. INSPECT COMMUTATOR CIRCLE RUNOUT

(a) Place the commutator on V–blocks.

(b) Using a dial indicator the circle runout.

Maximum circle runout: 0.05 mm (0.0020 in.)

If the circle runout is greater than maximum, correct it on a lathe.

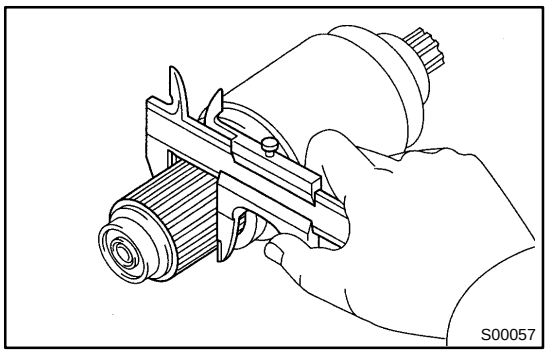

5. INSPECT COMMUTATOR DIAMETER

Using vernier calipers, measure the commutator diameter.

Standard diameter:

1.4 kW type	30.0 mm (1.181 in.)
2.0 kW type	35.0 mm (1.378 in.)

Minimum diameter:

1.4 kW type	29.0 mm (1.142 in.)
2.0 kW type	34.0 mm (1.339 in.)

If the diameter is less than minimum, replace the armature.

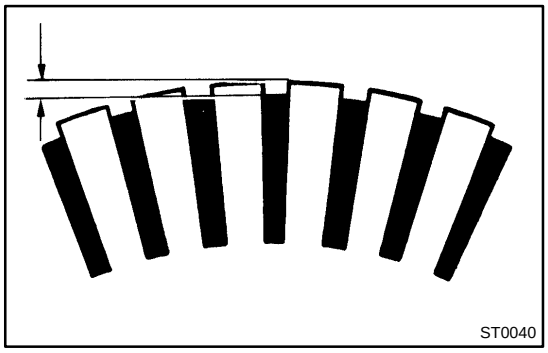

6. INSPECT UNDERCUT DEPTH

Check that the undercut depth is clean and free of foreign materials. Smooth out the edge.

Standard undercut depth:

1.4 kW type	0.6 mm (0.024 in.)
2.0 kW type	0.7 mm (0.028 in.)

Minimum undercut depth: 0.2 mm (0.008 in.)

If the undercut depth is less than minimum, correct it with a hacksaw blade.

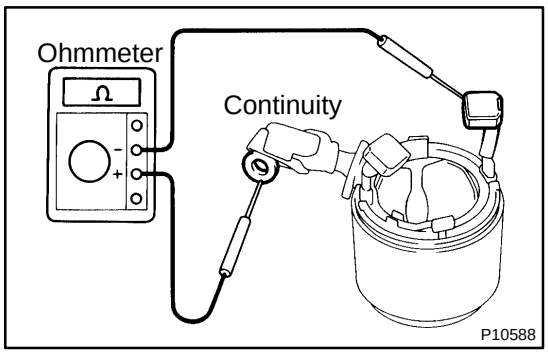

7. INSPECT FIELD COIL FOR OPEN CIRCUIT

Using an ohmmeter, check that there is continuity between the lead wire and field coil brush lead.

If there is no continuity, replace the field frame.

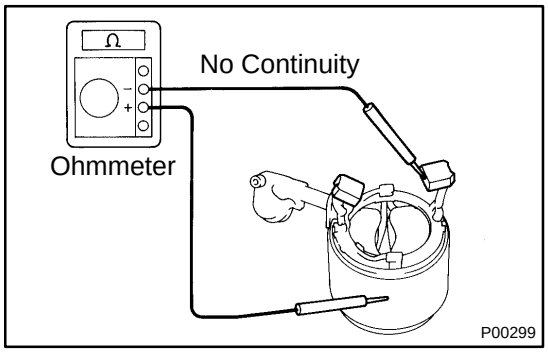

8. INSPECT THAT FIELD COIL IS NOT GROUNDED

Using an ohmmeter, check that there is no continuity between the field coil end and field frame.

If there is continuity, repair or replace the field frame.

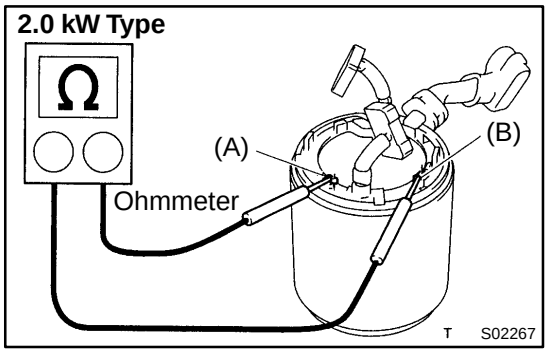

9. 2.0 kW type:
INSPECT SHUNT COIL FOR OPEN CIRCUIT

Using an ohmmeter, measure the resistance between shunt coil terminals (A) and (B).

Resistance: 1.5 – 1.9 Ω at 20˚C (68˚F)

If the resistance is not as specified, replace the field frame.

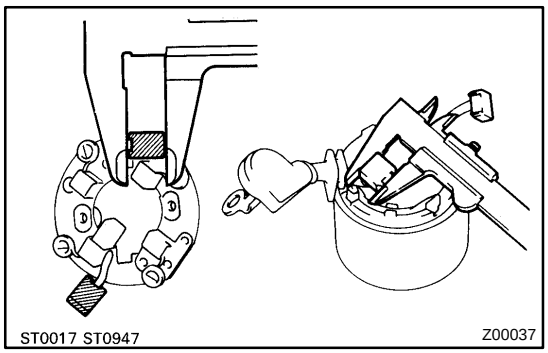

10. INSPECT BRUSH LENGTH

Using vernier calipers, measure the brush length.

Standard length:

1.4 kW type	15.5 mm (0.610 in.)
2.0 kW type	15.0 mm (0.591 in.)

Minimum length:

1.4 kW type	10.0 mm (0.394 in.)
2.0 kW type	9.0 mm (0.354 in.)

If the length is less than minimum, replace the brush holder and field frame.

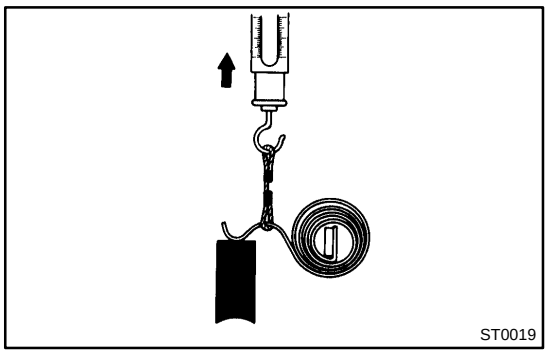

11. INSPECT BRUSH SPRING LOAD

Take the pull scale reading the instant the brush spring separates from the brush.

Standard spring installed load:

1.4 kW type	17.6 – 23.5 N (1.8 – 2.4 kgf, 4.0 – 5.3 lbf)
2.0 kW type	21.5 – 27.5 N (2.2 – 2.8 kgf, 4.8 – 6.2 lbf)

Minimum spring installed load:

1.4 kW type	11.8 N (1.2 kgf, 2.7 lbf)
2.0 kW type	12.7 N (1.3 kgf, 2.9 lbf)

If the installed load is less than minimum, replace the brush springs.

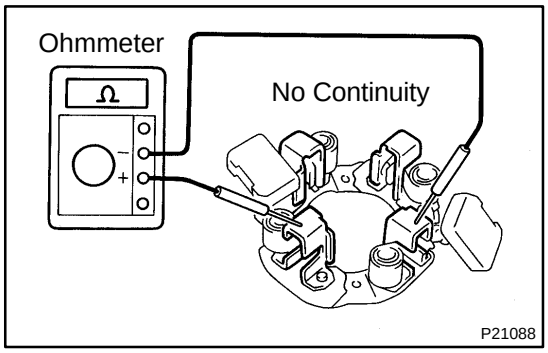

12. INSPECT BRUSH HOLDER INSULATION

Using an ohmmeter, check that there is no continuity between the positive (+) and negative (–) brush holders.

If there is continuity, repair or replace the brush holder.

13. INSPECT GEAR TEETH

Check the gear teeth on the pinion gear, idle gear and the clutch assembly for wear or damage.

If damaged, replace the gear or clutch assembly.

If damaged, also check the drive plate ring gear for wear or damage.

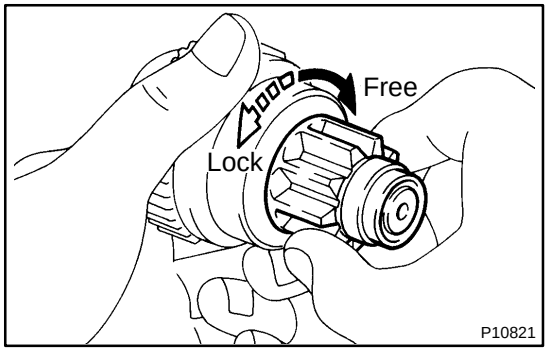

14. INSPECT CLUTCH PINION GEAR

Rotate the pinion gear clockwise, and check that it turns freely.

Try to rotate the pinion gear counterclockwise and check that it locks.

If necessary, replace the clutch assembly.

15. INSPECT FRONT AND REAR BEARING

Turn the bearing by hand while applying inward force.

If resistance is felt or the bearing sticks, replace the bearing.

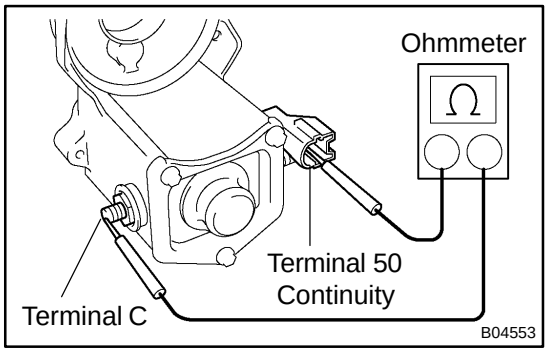

16. DO PULL–IN COIL OPEN CIRCUIT TEST

Using an ohmmeter, check that there is continuity between terminals 50 and C.

If there is no continuity, check and replace the magnetic switch.

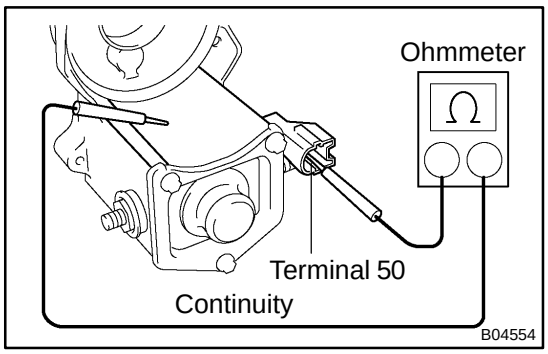

17. DO HOLD–IN COIL OPEN CIRCUIT TEST

Using an ohmmeter, check that there is continuity between terminal 50 and the switch body.

If there is no continuity, replace the magnetic switch.

ST08F–06

REPLACEMENT

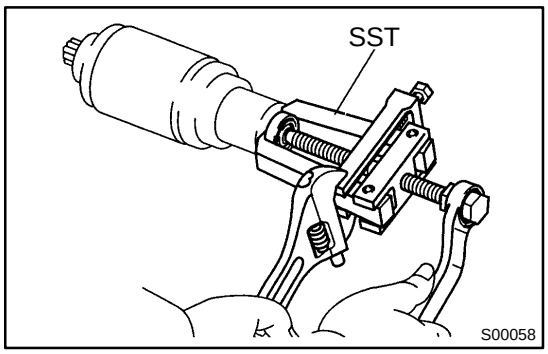

1. REPLACE REAR BEARING

(a) Using SST, remove the bearing.
SST 09286–46011

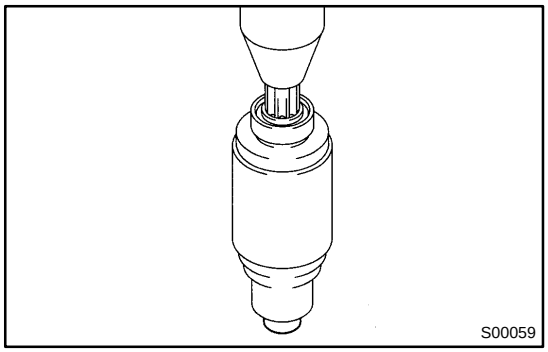

(b) Using a press, press in a new bearing.

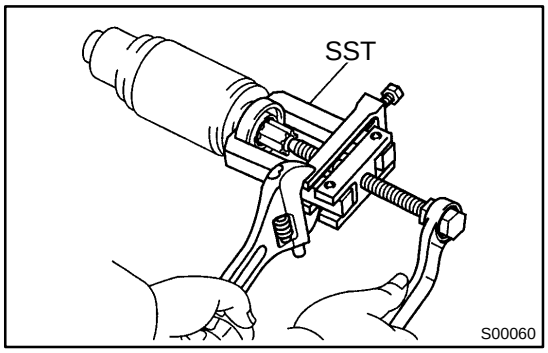

2. REPLACE FRONT BEARING

(a) Using SST, remove the bearing.
SST 09286–46011

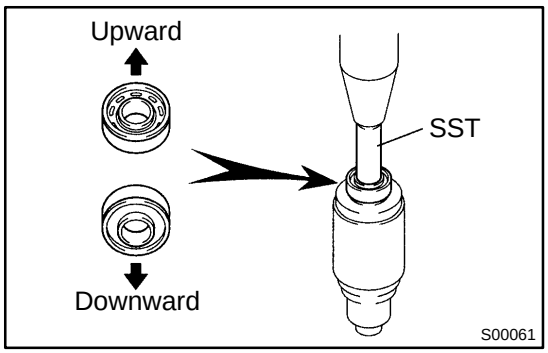

(b) Using SST and a press, press in a new bearing.

NOTICE:

Be careful of the bearing installation direction.

SST 09820–00031

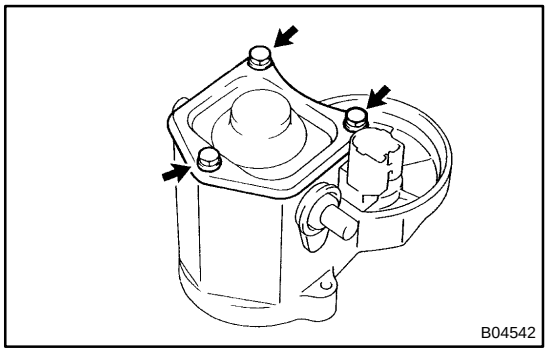

3. REPLACE MAGNETIC SWITCH TERMINAL KIT PARTS

(a) Remove magnetic switch end cover.
Remove the 3 bolts, end cover, gasket and plunger.

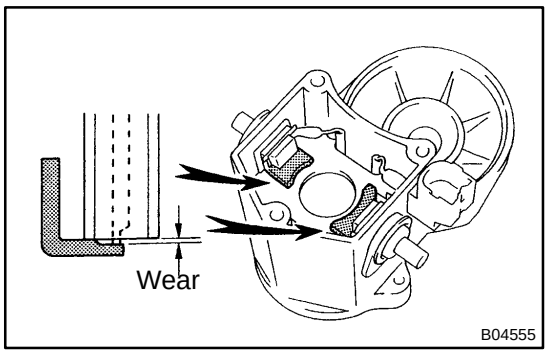

(b) Inspect contact plate for wear.
Using vernier calipers, measure the contact plate for depth of wear.
Maximum wear: 0.9 mm (0.035 in.)

If the depth of wear is greater than the maximum, replace the contact plate.

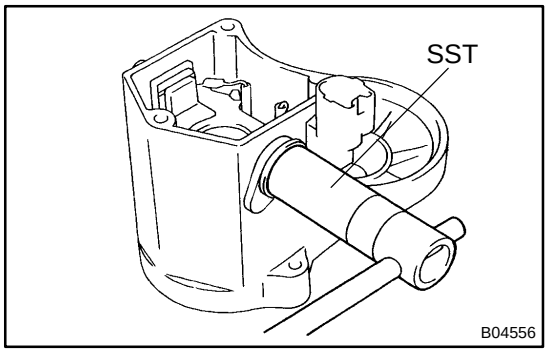

(c) Remove terminal kit parts.
(1) Using SST, loosen the terminal nuts.
SST 09810–38140
(2) Terminal C:
Remove the terminal nut, wave washer, terminal insulator (outside), O–ring, terminal bolt, contact plate and terminal insulator (inside).
(3) Terminal 30:
Remove the terminal nut, wave washer, terminal insulator (outside), O–ring, terminal bolt, contact plate, terminal insulator (inside) and insulation paper.

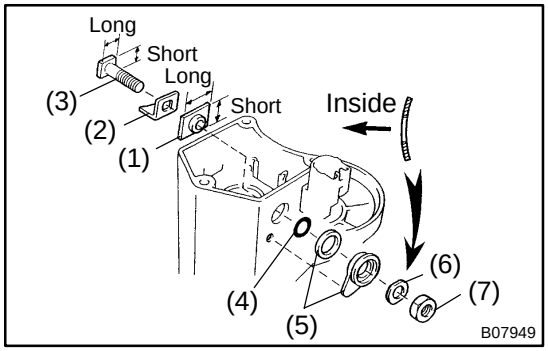

(d) Install new terminal 30 kit parts.
(1) Temporarily install a new terminal insulator (inside).
(2) Temporarily install a new contact plate.
(3) Temporarily install a new terminal bolt.
(4) Temporarily install a new O–ring.
(5) Temporarily install a new packing and new terminal insulator (outside).
Install a new packing to a new terminal insulator, and install them.

HINT:
Match the protrusion of the insulator with the indentation of the housing.

(6) Temporarily install a new wave washer.
(7) Temporarily install a new terminal nut.

NOTICE:
Be careful to install the terminal insulator (inside) and wave washer in the correct direction.

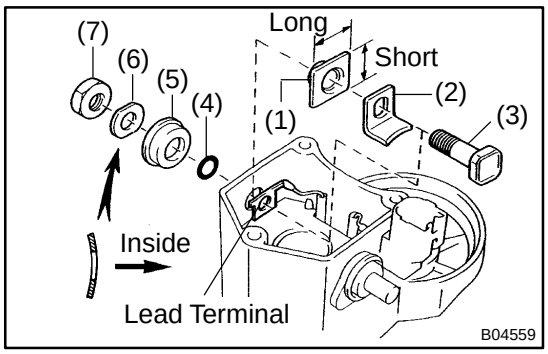

(e) Install new terminal C kit parts.
(1) Temporarily install a new terminal insulator (inside).
(2) Temporarily install a new contact plate.
(3) Temporarily install a new terminal bolt.
(4) Temporarily install a new O–ring.
(5) Temporarily install a new terminal insulator (outside).
(6) Temporarily install a new wave washer.
(7) Temporarily install a new terminal nut.

NOTICE:

Be careful to install the terminal insulator (inside) and wave washer in the correct direction.

(f) Temporarily tighten the terminal nuts.

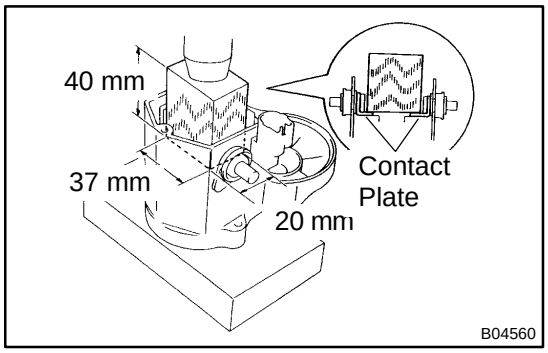

(g) Tighten terminal nuts.
(1) Put a wooden block on the contact plate and press it down with a hand press.

Dimensions of wooden block:
20 x 37 x 40 mm (0.79 x 1.46 x 1.57 in.)
Press force:
981 N (100 kgf, 221 lbf)

NOTICE:

▲ **Check the diameter of the hand press ram. Then calculate the gauge pressure of the press when 981 N (100 kgf, 221 lbf) of force is applied.**

Gauge pressure:

$$(kgf/cm^2) = \frac{100\ kgf}{\left(\frac{\text{Ram diameter (cm)}}{2}\right)^2 \times 3.14\ (\pi)}$$

$$(psi) = \frac{221 lbf}{\left(\frac{\text{Ram diameter (in.)}}{2}\right)^2 \times 3.14\ (\pi)}$$

$$(kPa) = (kgf/cm^2) \times 98.1$$

$$(kPa) = (psi) \times 6.9$$

▲ **If the contact plate is not pressed down with the specified pressure, the contact plate may tilt due to coil deformation or the tightening of the nut.**

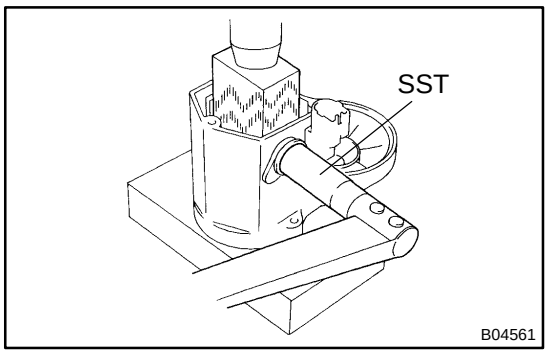

(2) Using SST, tighten the nuts to the specified torque.
SST 09810–38140
Torque: 17 N·m (170 kgf·cm, 13 ft·lbf)

NOTICE:
If the nut is over tightened, it may cause cracks on the inside of the insulator.

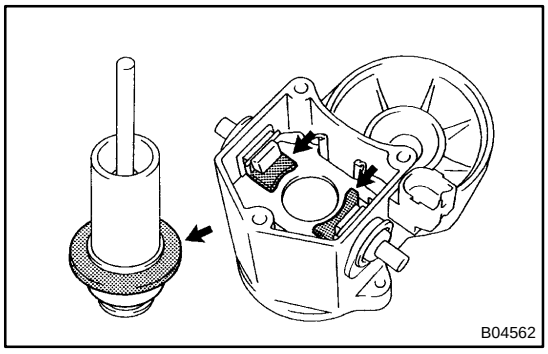

(h) Clean contact surfaces of contact plate and plunger.
Clean the contact surfaces of the remaining contact plate and plunger with a dry shop rag.

(i) Reinstall magnetic switch end cover.
Install the plunger, new gasket, end cover and lead clamp with the 3 bolts.
Torque:
1.4 kW type: 2.5 N·m (25 kgf·cm, 22 in.·lbf)
2.0 kW type: 3.6 N·m (37 kgf·cm, 32 in.·lbf)

ST08G–05

REASSEMBLY

Reassembly is in the reverse order of disassembly (See page ST–7).

HINT:

At the time of assembly, use high–temperature grease to lubricate the bearing and gears when assembling the starter.

ST08H–06

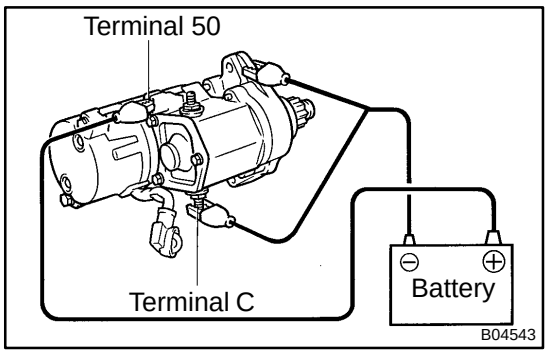

TEST

NOTICE:

These tests must be done within 3 to 5 seconds to avoid burning out the coil.

1. DO PULL–IN TEST

(a) Disconnect the field coil lead wire from terminal C.

(b) Connect the battery to the magnetic switch as shown. Check that the pinion gear moves outward.

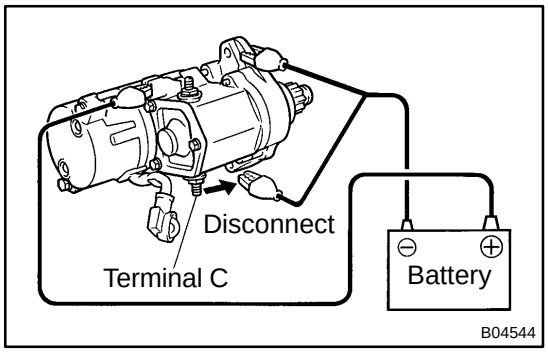

2. DO HOLD–IN TEST

While connected as above with the pinion gear out, disconnect the negative (–) lead from terminal C. Check that the pinion gear remains out.

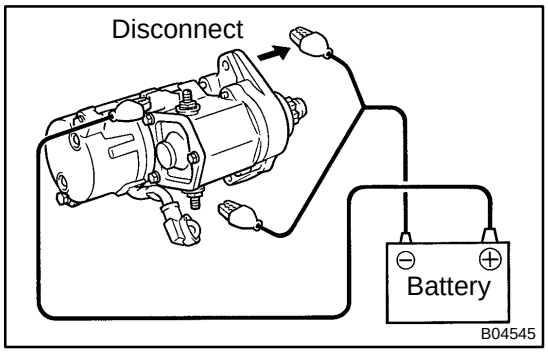

3. INSPECT CLUTCH PINION GEAR RETURN

Disconnect the negative (–) lead from the starter body. Check that the pinion gear returns inward.

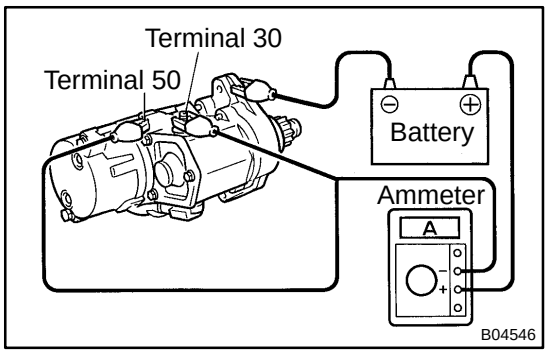

4. DO NO–LOAD PERFORMANCE TEST

(a) Connect the battery and ammeter to the starter as shown.

(b) Check that the starter rotates smoothly and steadily with the pinion gear moving out. Check that the ammeter shows the specified current.

Specified current:

1.4 kW type	90 A or less at 11.5 V
2.0 kW type	100 A or less at 11.5 V

ST08I–03

INSTALLATION

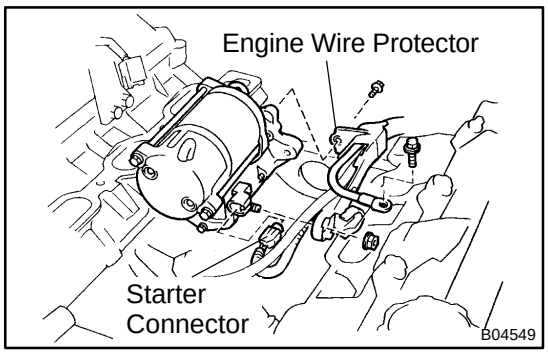

1. INSTALL STARTER

(a) Install the engine wire protector to the starter with the bolt.
Torque: 9.81 N·m (100 kgf·cm, 84 in.·lbf)

(b) Connect the starter wire with the nut.
Torque: 9.81 N·m (100 kgf·cm, 84 in.·lbf)

(c) Connect the starter connector.

(d) Connect the starter to the cylinder block.

(e) Connect the engine wire with the bolt.

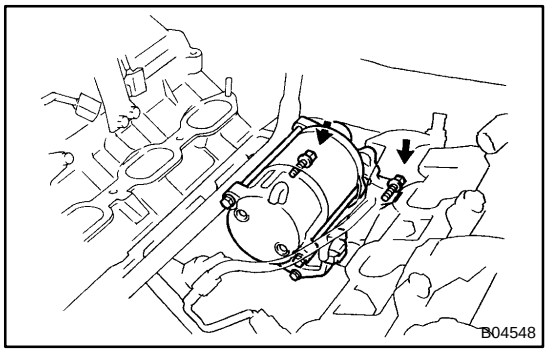

(f) Install the starter with the 2 bolts.
Torque: 39 N·m (400 kgf·cm, 29 ft·lbf)

2. INSTALL INTAKE MANIFOLD ASSEMBLY (See page EM–56)

3. CONNECT THROTTLE BODY ASSEMBLY TO INTAKE MANIFOLD (See page SF–32)

4. INSTALL INTAKE AIR CONNECTOR

5. CONNECT ACCELERATOR CABLE

6. INSTALL THROTTLE BODY COVER

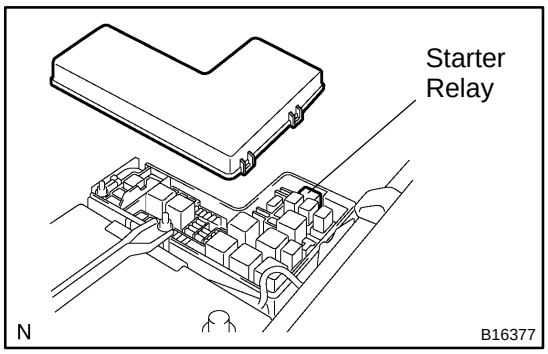

STARTER RELAY

ST08J–06

INSPECTION

1. **REMOVE RELAY BOX COVER**
2. **REMOVE STARTER RELAY (Marking: ST)**

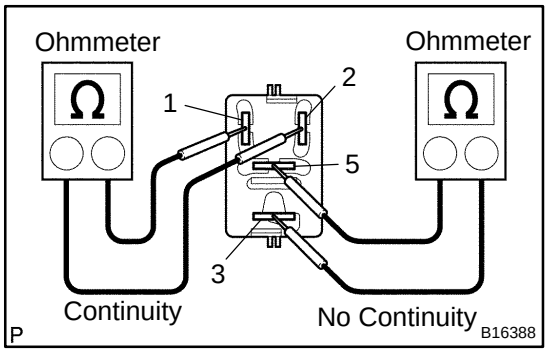

3. **INSPECT STARTER RELAY**

(a) Inspect the relay continuity.

(1) Using an ohmmeter, check that there is continuity between terminals 1 and 2.

If there is no continuity, replace the relay.

(2) Check that there is no continuity between terminals 3 and 5.

If there is continuity, replace the relay.

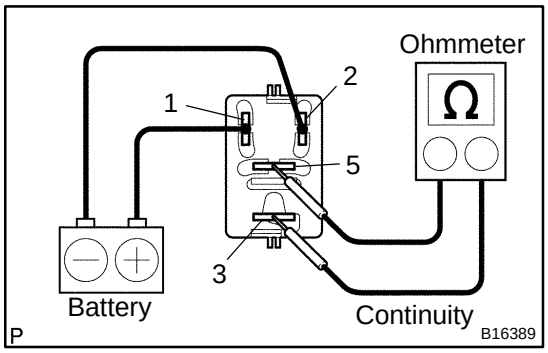

(b) Inspect the relay operation.

(1) Apply battery voltage across terminals 1 and 2.

(2) Using an ohmmeter, check that there is continuity between terminals 3 and 5.

If there is no continuity, replace the relay.

4. **REINSTALL RELAY BOX COVER**
5. **REINSTALL STARTER RELAY**

STEERING SYSTEM

SR01S–03

PRECAUTION

- **Care must be taken to replace parts properly because they could affect the performance of the steering system and result in a driving hazard.**
- **The TOYOTA TUNDRA is equipped with an SRS (Supplemental Restraint System) such as the driver airbag and front passenger airbag. Failure to carry out service operation in the correct sequence could cause the SRS to unexpectedly deploy during servicing, possibly leading to a serious accident. Before servicing (including removal or installation of parts, inspection or replacement), be sure to read the precautionary notices in the RS section.**

TROUBLESHOOTING

SR01T–08

PROBLEM SYMPTOMS TABLE

Use the table below to help you find the cause of the problem. The numbers indicate the priority of the likely cause of the problem. Check each part in the order shown. If necessary, repair or replace these parts.

Symptom	Suspect Area	See page
Hard steering	1. Tires (Improperly inflated)	SA–3
	2. Power steering fluid level (Low)	SR–5
	3. Drive belt (Loose)	SR–3
	4. Front wheel alignment (Incorrect)	SA–5
	5. Steering system joints (Worn)	–
	6. Suspension arm ball joints (Worn)	SA–75
	7. Steering column (Binding)	–
	8. Power steering vane pump	SR–30 SR–41
	9. Power steering gear	SR–52
Poor return	1. Tires (Improperly inflated)	SA–3
	2. Front wheel alignment (Incorrect)	SA–5
	3. Steering column (Binding)	–
	4. Power steering gear	SR–52
Excessive play	1. Steering system joints (Worn)	–
	2. Suspension arm ball joints (Worn)	SA–75
	3. Intermediate shaft, Sliding yoke (Worn)	–
	4. Front wheel bearing (Worn)	SA–9
	5. Power steering gear	SR–52
Abnormal noise	1. Power steering fluid level (Low)	SR–5
	2. Steering system joints (Worn)	–
	3. Power steering vane pump	SR–30 SR–41
	4. Power steering gear	SR–52

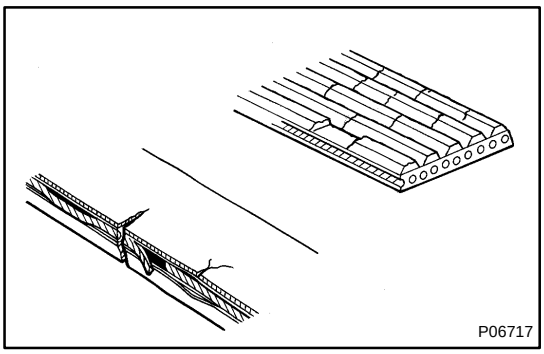

DRIVE BELT

SR01U–04

INSPECTION

INSPECT DRIVE BELT

(a) Visually check the belt for excessive wear, frayed cords, etc.

If any defect has been found, replace the drive belt.

HINT:

Cracks on the rib side of a belt are considered acceptable. If the missing chunks from the ribs are found on the belt, it should be replaced.

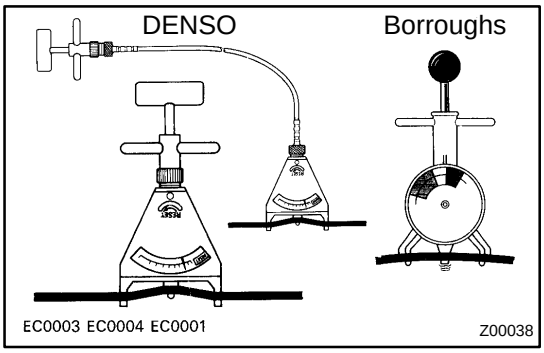

(b) 5VZ–FE engine:

Belt tension gauge:

DENSO BTG–20 (95506–00020)

Borroughs No. BT–33–73F

Drive belt tension:

New belt: 135 – 180 lbf

Used belt: 85 – 120 lbf

If the belt tension is not as specified, adjust it.

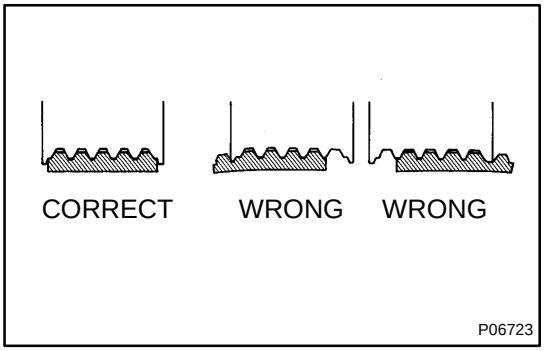

HINT:

- ▲ ”New belt” refers to a belt which has been used less than 5 minutes on a running engine.
- ▲ ”Used belt” refers to a belt which has been used on a running engine for 5 minutes or more.
- ▲ After installing a belt, check that it fits properly in the ribbed grooves.
- ▲ Check with your hand to confirm that the belt has not slipped out of the groove on the bottom of the pulley.
- ▲ After installing a new belt, run the engine for about 5 minutes and recheck the belt tension.

POWER STEERING FLUID

SR01V–04

BLEEDING

1. CHECK FLUID LEVEL (See page SR–5)

2. JACK UP FRONT OF VEHICLE AND SUPPORT IT WITH STANDS

3. TURN STEERING WHEEL

With the engine stopped, turn the wheel slowly from lock to lock several times.

4. LOWER VEHICLE

5. START ENGINE

Run the engine at idle for a few minutes.

6. TURN STEERING WHEEL

(a) With the engine idling, turn the wheel to left or right full lock position and keep it there for 2–3 seconds, then turn the wheel to the opposite full lock position and keep it there for 2–3 seconds.

(b) Repeat (a) several times.

7. STOP ENGINE

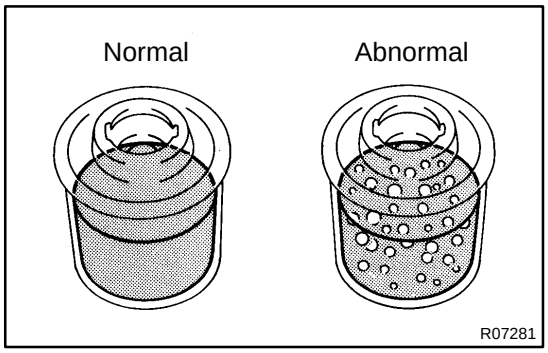

8. CHECK FOR FOAMING OR EMULSIFICATION

If the system has to be bled twice specifically because of foaming or emulsification, check for fluid leaks in the system.

9. CHECK FLUID LEVEL (See page SR–5)

SR01W–04

INSPECTION

1. CHECK FLUID LEVEL

(a) Keep the vehicle level.

(b) With the engine stopped, check the fluid level in the oil reservoir.

If necessary, add fluid.

Fluid: ATF DEXRON® II or III

HINT:

Check that the fluid level is within the HOT LEVEL range on the reservoir/reservoir cap dipstick.

If the fluid is cold, check that it is within the COLD LEVEL range.

(c) Start the engine and run it at idle.

(d) Turn the steering wheel from lock to lock several times to boost fluid temperature.

Fluid temperature: 80˚C (176˚F)

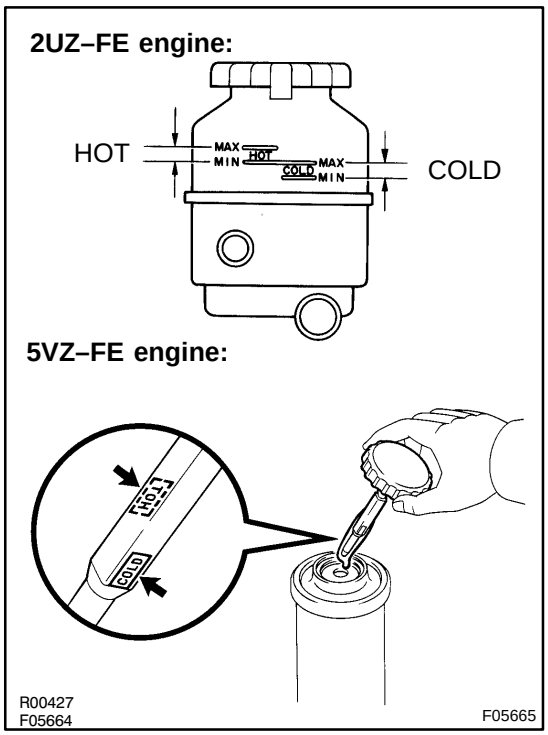

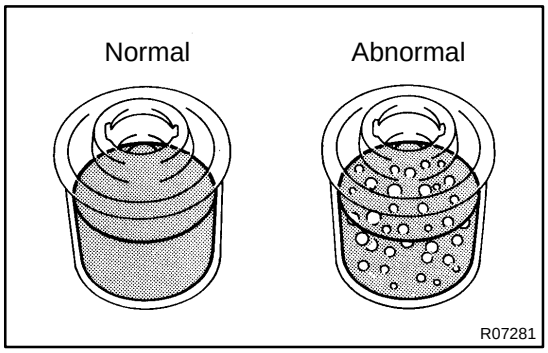

(e) Check for foaming or emulsification.

If there is foaming or emulsification, bleed power steering system (See page SR–4).

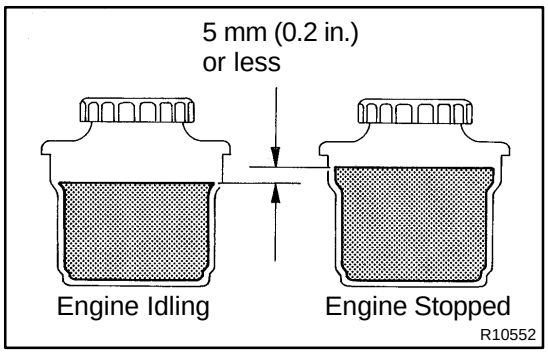

(f) With the engine idling, measure the fluid level in the oil reservoir.

(g) Stop the engine.

(h) Wait a few minutes and remeasure the fluid level in the oil reservoir.

Maximum fluid level rise: 5 mm (0.20 in.)

If a problem is found, bleed power steering system (See page SR–4).

(i) Check the fluid level.

2. CHECK STEERING FLUID PRESSURE

(a) 5VZ–FE engine:
Remove the air cleaner assembly (See page SR–32).

(b) 2UZ–FE engine:
Remove the air cleaner assembly with air cleaner hose (See page SR–43).

(c) Disconnect the pressure feed tube from the PS vane pump.
(5VZ–FE engine: See page SR–32)
(2UZ–FE engine: See page SR–43)

(d) Connect SST, as shown in the illustration below.
SST 09640–10010 (09641–01010, 09641–01030, 09641–01060)

NOTICE:
Check that the valve of the SST is in the open position.

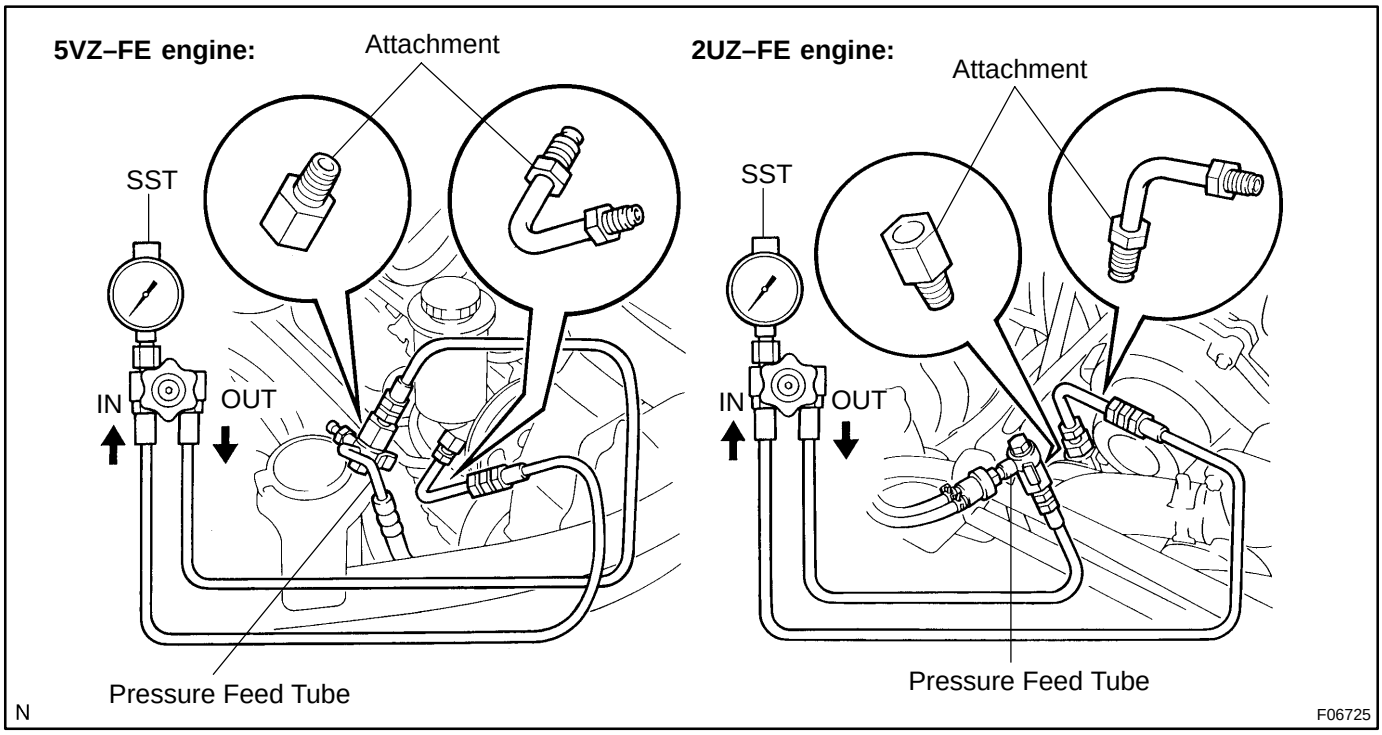

(e) Bleed the power steering system (See page SR–4).

(f) Start the engine and run it at idle.

(g) Turn the steering wheel from lock to lock several times to boost fluid temperature.
Fluid temperature: 80 °C (176 °F)

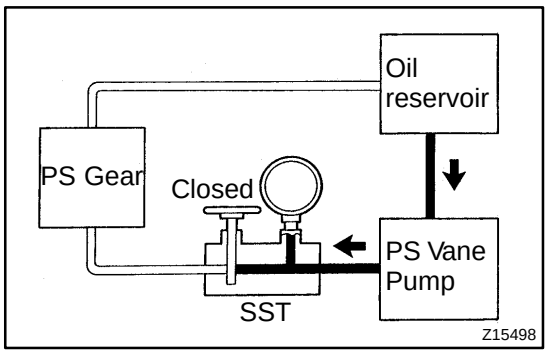

(h) With the engine idling, close the valve of the SST and observe the reading on the SST.
Minimum fluid pressure:
8,336 kPa (85 kgf/cm^2, 1,209 psi)

NOTICE:

- **Do not keep the valve closed for more than 10 seconds.**
- **Do not let the fluid temperature become too high.**

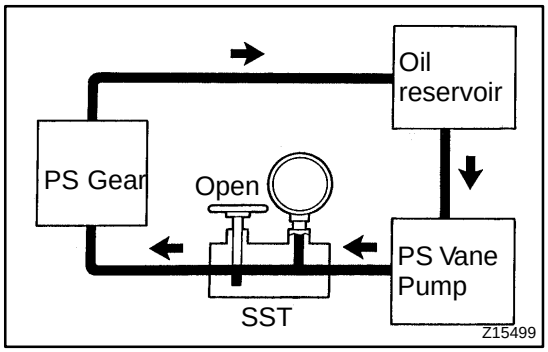

(i) With the engine idling, open the valve fully.
(j) Measure the fluid pressure at engine speeds of 1,000 rpm and 3,000 rpm.
Difference fluid pressure:
490 kPa (5 kgf/cm^2, 71 psi) or less

NOTICE:
Do not turn the steering wheel.

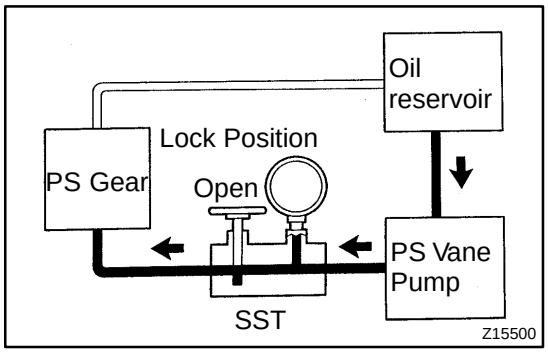

(k) With the engine idling and valve fully opened, turn the steering wheel to full lock.
Minimum fluid pressure:
8,336 kPa (85 kgf/cm^2, 1,209 psi)

NOTICE:

- **Do not maintain lock position for more than 10 seconds.**
- **Do not let the fluid temperature become too high.**

(l) Disconnect the SST.
SST 09640–10010 (09641–01010, 09641–01030, 09641–01060)
(m) Connect the pressure feed tube.
(5VZ–FE engine: See page SR–40)
(2UZ–FE engine: See page SR–51)
(n) 5VZ–FE engine:
Install the air cleaner assembly (See page SR–40).
(o) 2UZ–FE engine:
Install the air cleaner assembly with air cleaner hose (See page SR–51).
(p) Bleed the power steering system (See page SR–4).

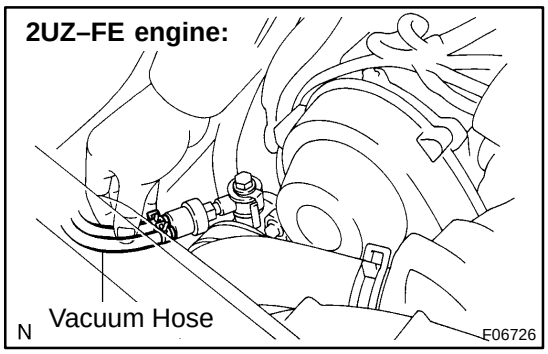

AIR CONTROL VALVE

SR01X–04

INSPECTION

1. TURN AIR CONDITIONING SWITCH OFF

2. CHECK IDLE–UP

(a) Start the engine and run it at idle.

(b) Fully turn the steering wheel.

(c) Check that the engine rotations decrease when the vacuum hose of the air control valve is pinched.

(d) Check that the engine rotations increase when the hose is released.

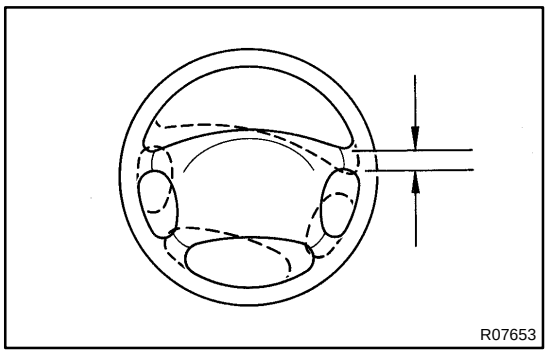

STEERING WHEEL

SR01Y–06

INSPECTION

1. CHECK STEERING WHEEL FREE PLAY

(a) Stop the vehicle and face the tires straight ahead.

(b) Rock the steering wheel gently up and down with a finger lightly, check the steering wheel free play.

Maximum free play: 30 mm (1.18 in.)

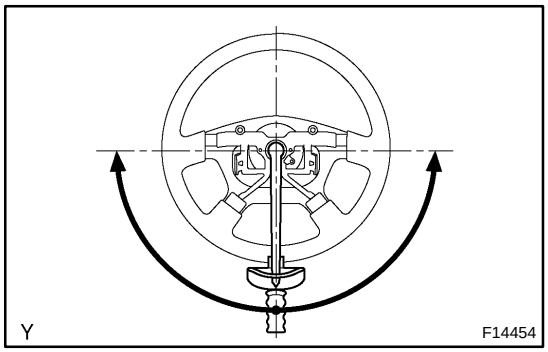

2. CHECK STEERING EFFORT

(a) Center the steering wheel.

(b) Remove the steering wheel pad (See page SR–18).

(c) Start the engine and run it at idle.

(d) Measure the steering effort in both directions.

Steering effort (Reference):

4.9 N·m (50 kgf·cm, 43 in.·lbf)

HINT:

Take the tire type, pressure and contact surface into consideration before making your diagnosis.

(e) Torque the steering wheel set nut.

Torque: 50 N·m (500 kgf·cm, 35 ft·lbf)

(f) Install the steering wheel pad (See page SR–28).

SR1HN–01

REPAIR PROCEDURES

HINT:

This is the repair procedure for steering off center.

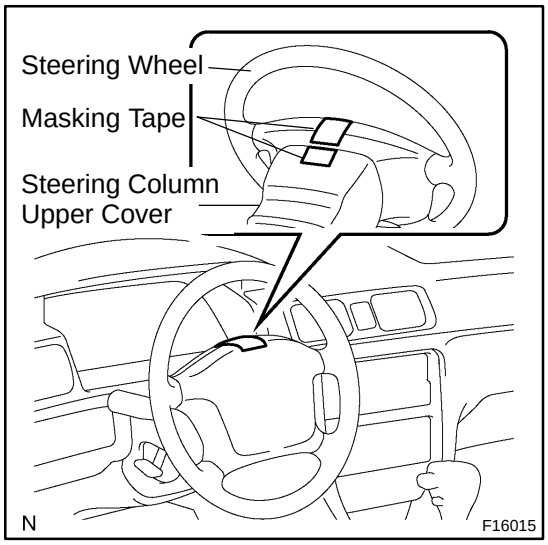

1. INSPECT STEERING WHEEL OFF CENTER

(a) Apply masking tape on the top center of the steering wheel and steering column upper cover.

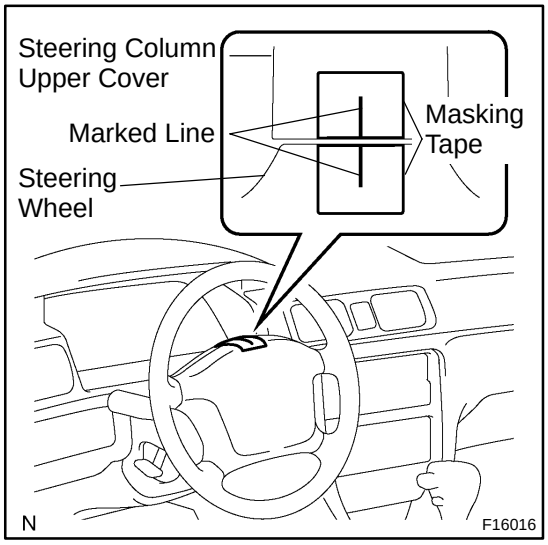

(b) Drive the vehicle in a straight line for 100 meters at a constant speed of 35 mph (56 km/h), and hold the steering wheel to maintain the course.

(c) Draw a line on the masking tape as shown in the illustration.

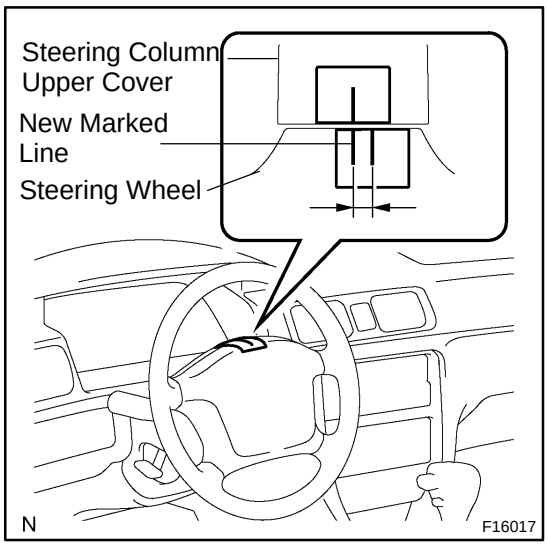

(d) Turn the steering wheel to its straight position.

HINT:

Refer to the upper surface of the steering wheel, steering spoke and SRS airbag line for the straight position.

(e) Draw a new line on the masking tape of the steering wheel as shown in the illustration.

(f) Measure the distance between the 2 lines on the masking tape of the steering wheel.

(g) Convert the measured distance to steering angle.
Measured distance 1 mm (0.04 in.) = Steering angle approximately 1 deg.

HINT:

Make a note of the steering angle.

2. ADJUST STEERING ANGLE

(a) Lift up the vehicle.

NOTICE:

The adjustment method for steering angle is different depending on the models. Check whether it is type A or B.

(b) Draw a line on the RH and LH tie rod and rack ends where it can easily be seen.

(c) Using a paper gauge, measure the distance from RH and LH tie rod ends to the rack end screws.

HINT:

▲ Measure the RH side and LH side.

▲ Make a note of the measured values.

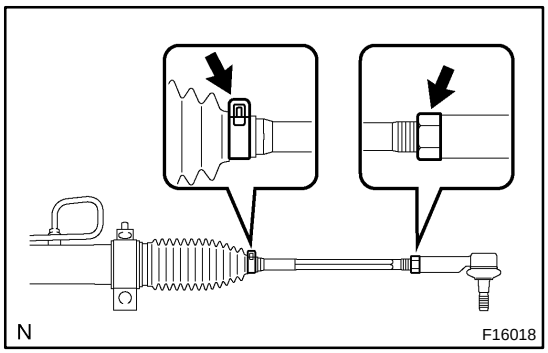

(d) Remove the RH and LH boot clips from the rack boots.

(e) Loosen the RH and LH lock nuts.

(f) Turn the RH and LH rack end by the same amount (but in different directions) according to the steering angle.
1 turn 360 deg. of rack end (1.5 mm (0.059 in.) horizontal movement) = 12 deg. of steering angle

(g) Tighten the RH and LH lock nuts by the specified torque.

NOTICE:

Make sure that the difference in length between RH and LH tie rod ends and rack end screws are within 1.5 mm (0.059 in.).

(h) Install the RH and LH boot clips.

STEERING COLUMN

COMPONENTS

SR0UZ–02

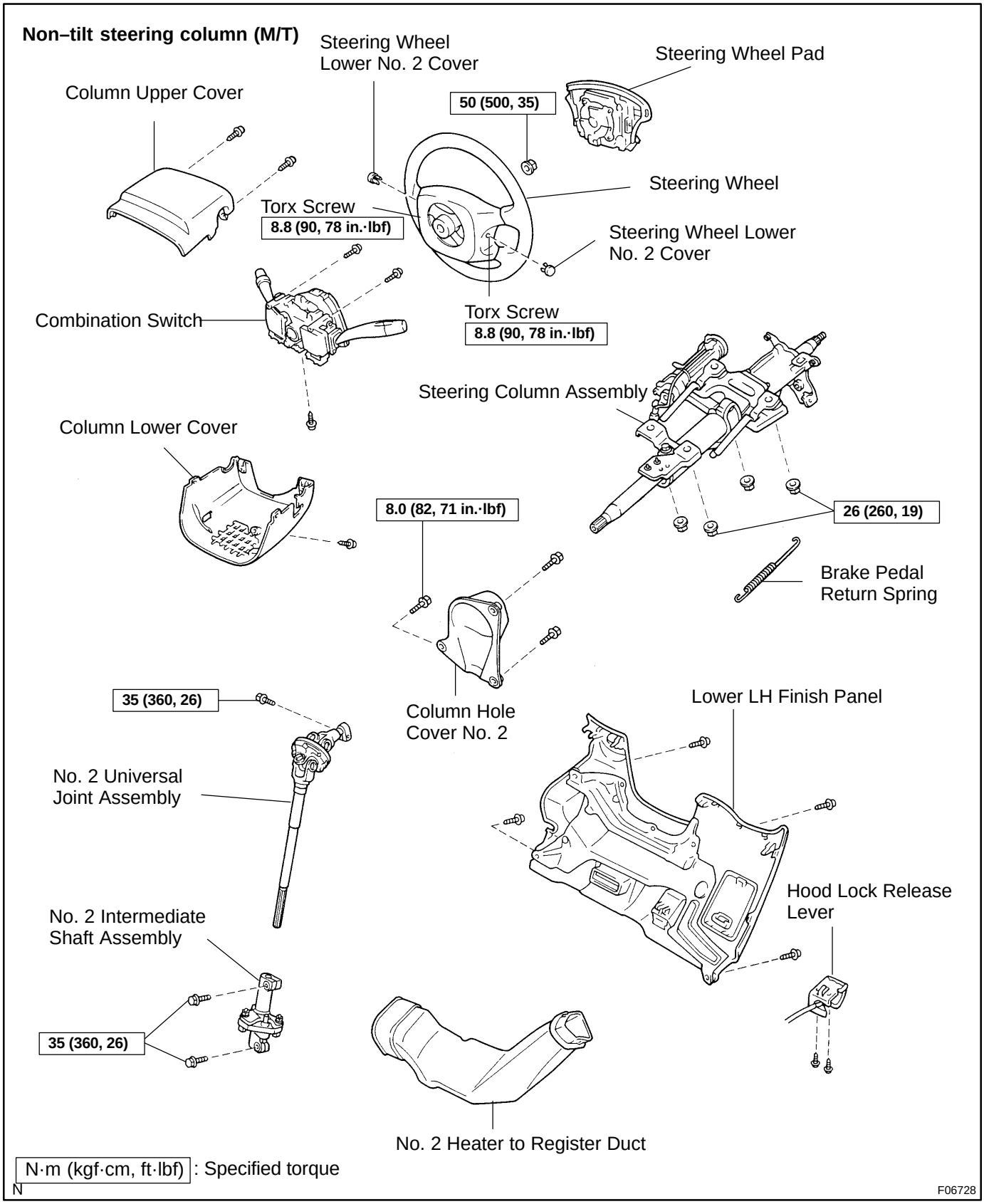

Non–tilt steering column (A/T)

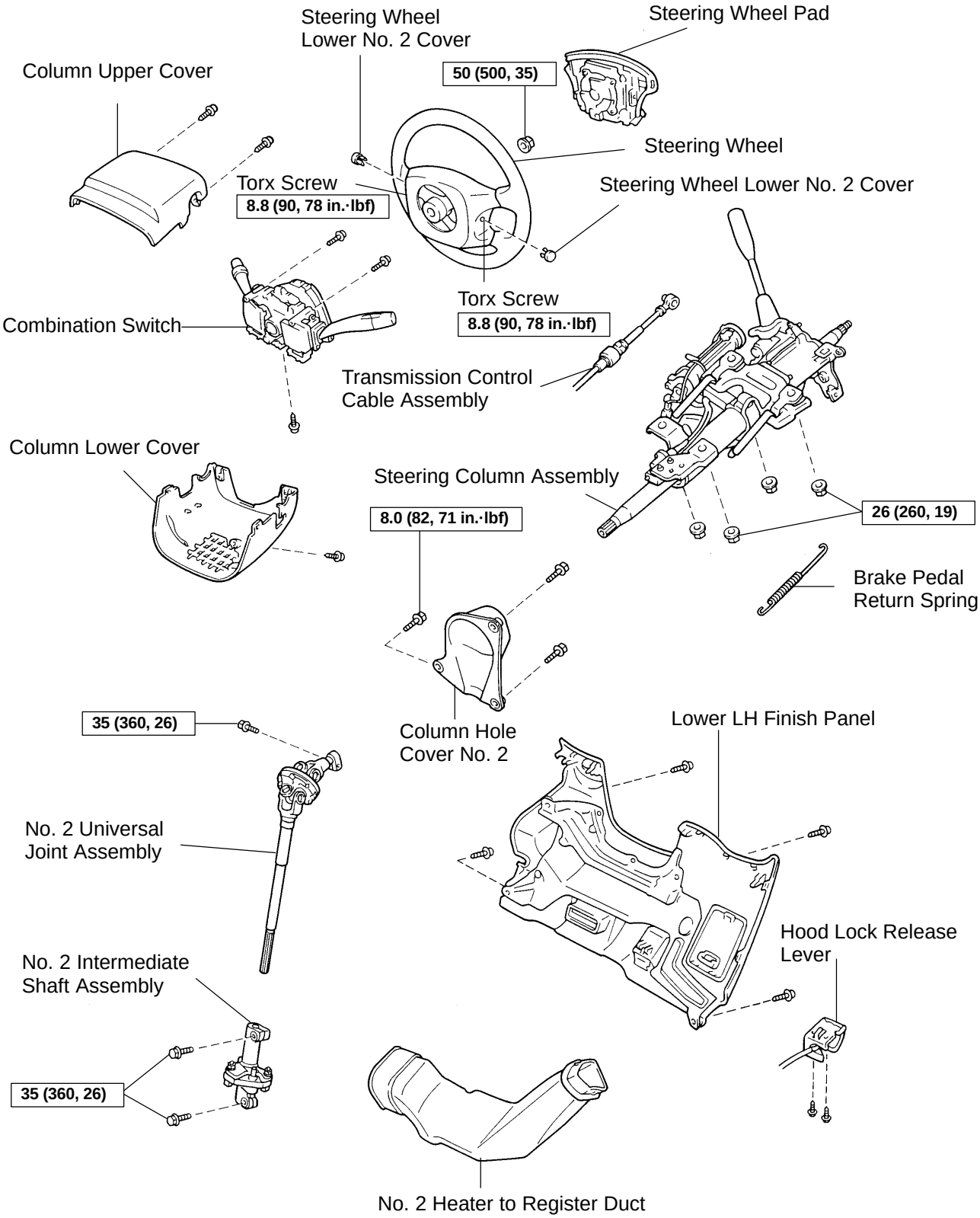

N

N·m (kgf·cm, ft·lbf) : Specified torque

F06708

Tilt steering column (M/T)

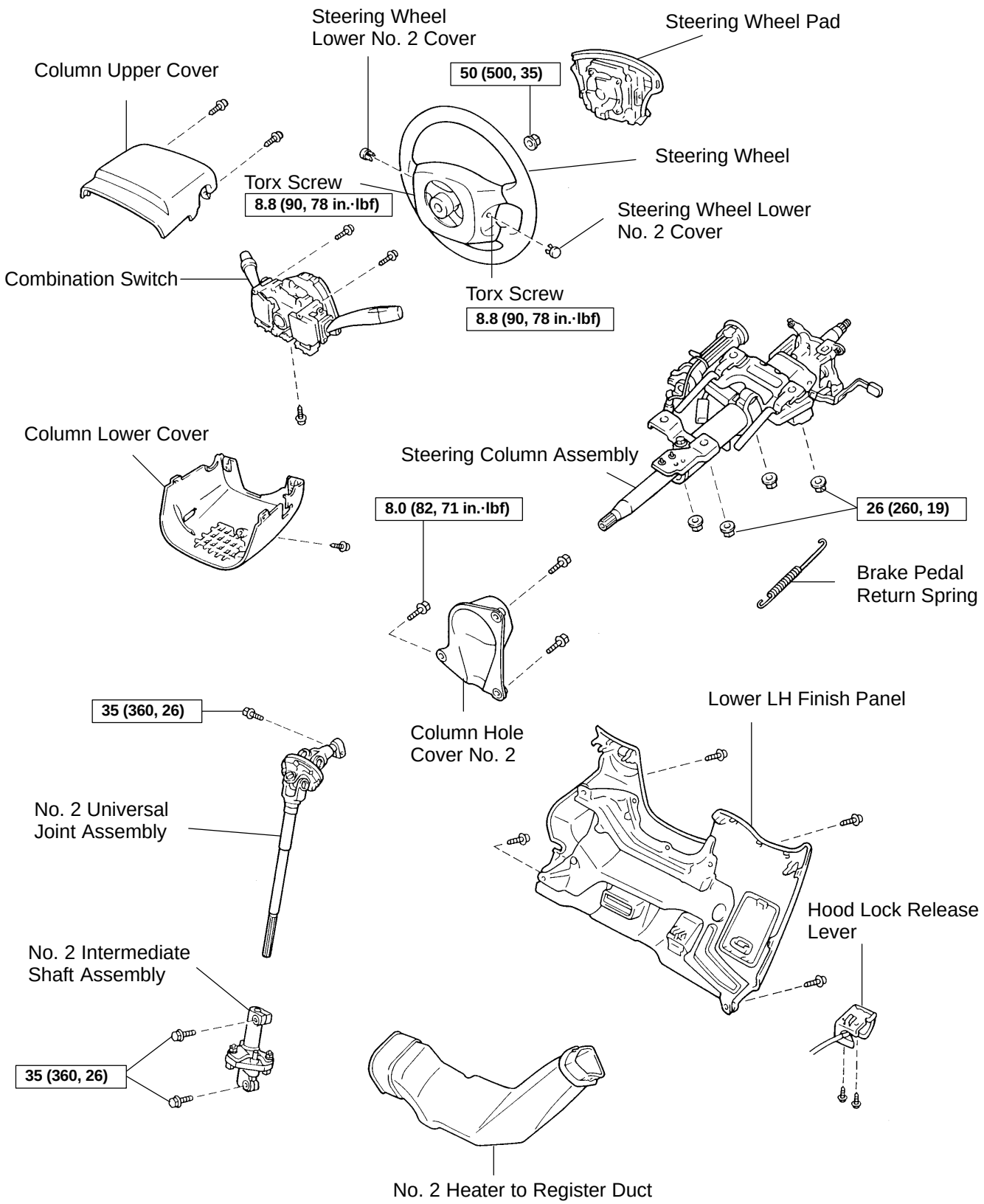

N·m (kgf·cm, ft·lbf) : Specified torque

N

F06729

Tilt steering column (A/T)

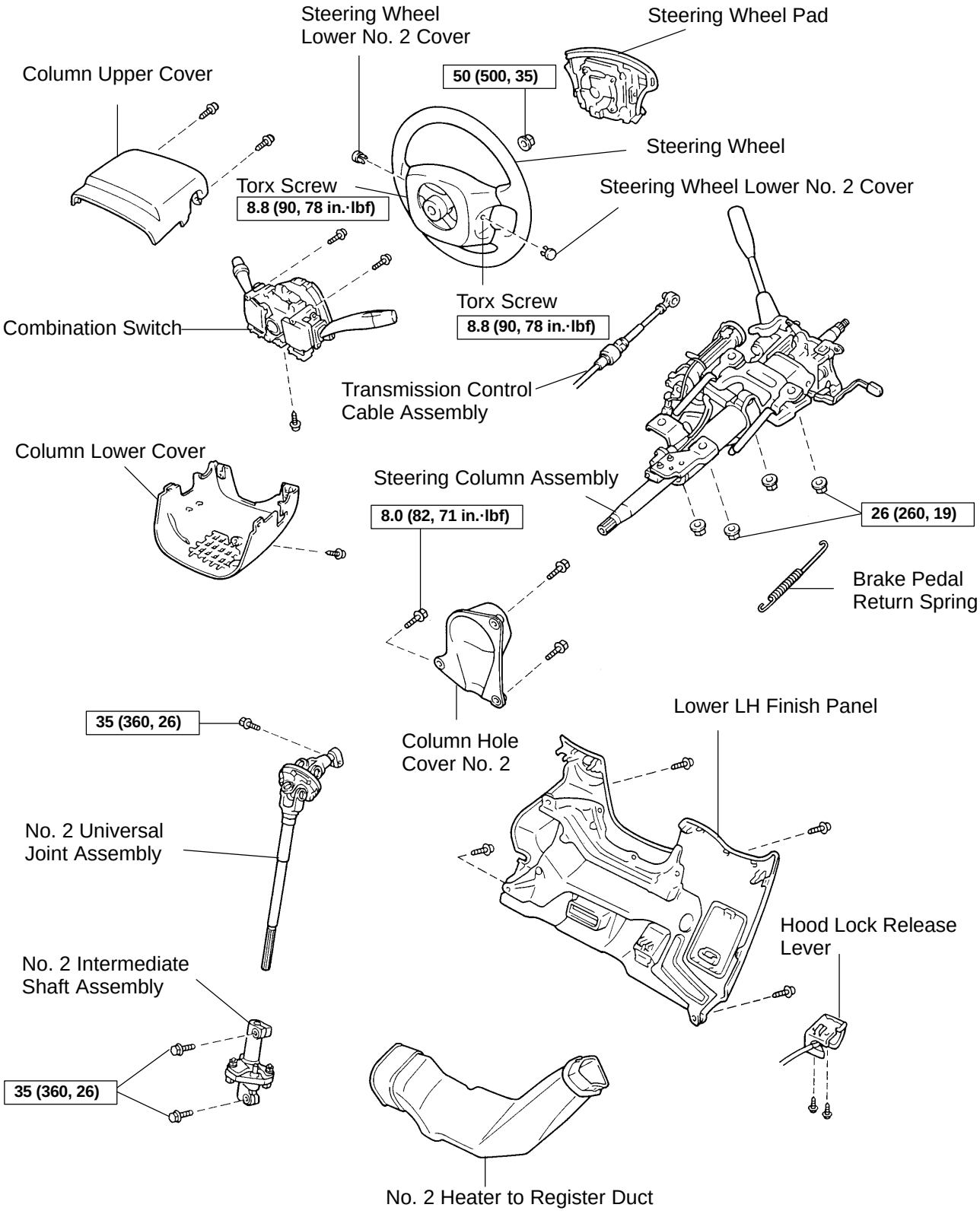

N·m (kgf·cm, ft·lbf) : Specified torque

N

F06707

Non–tilt steering column

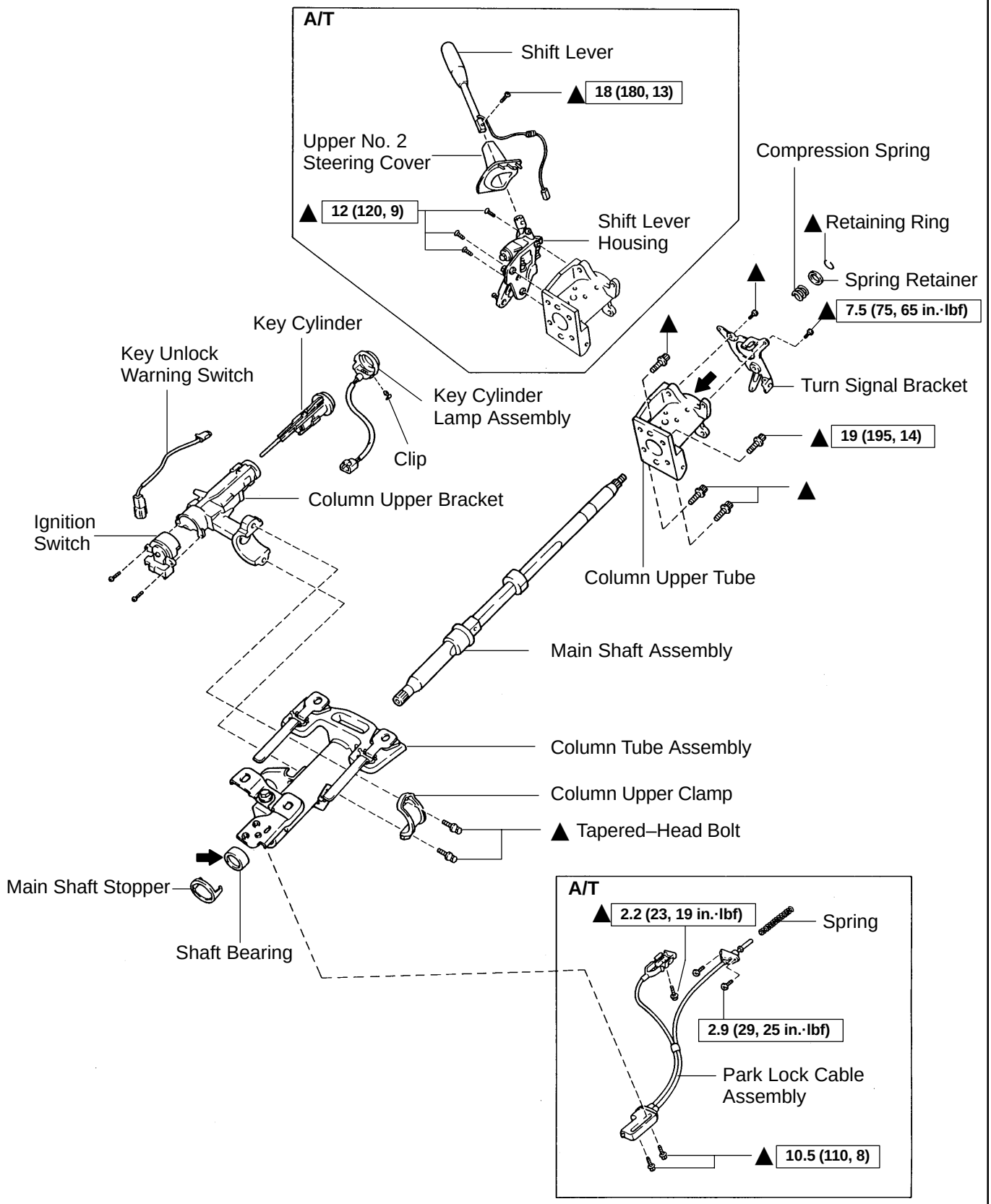

Tilt steering column

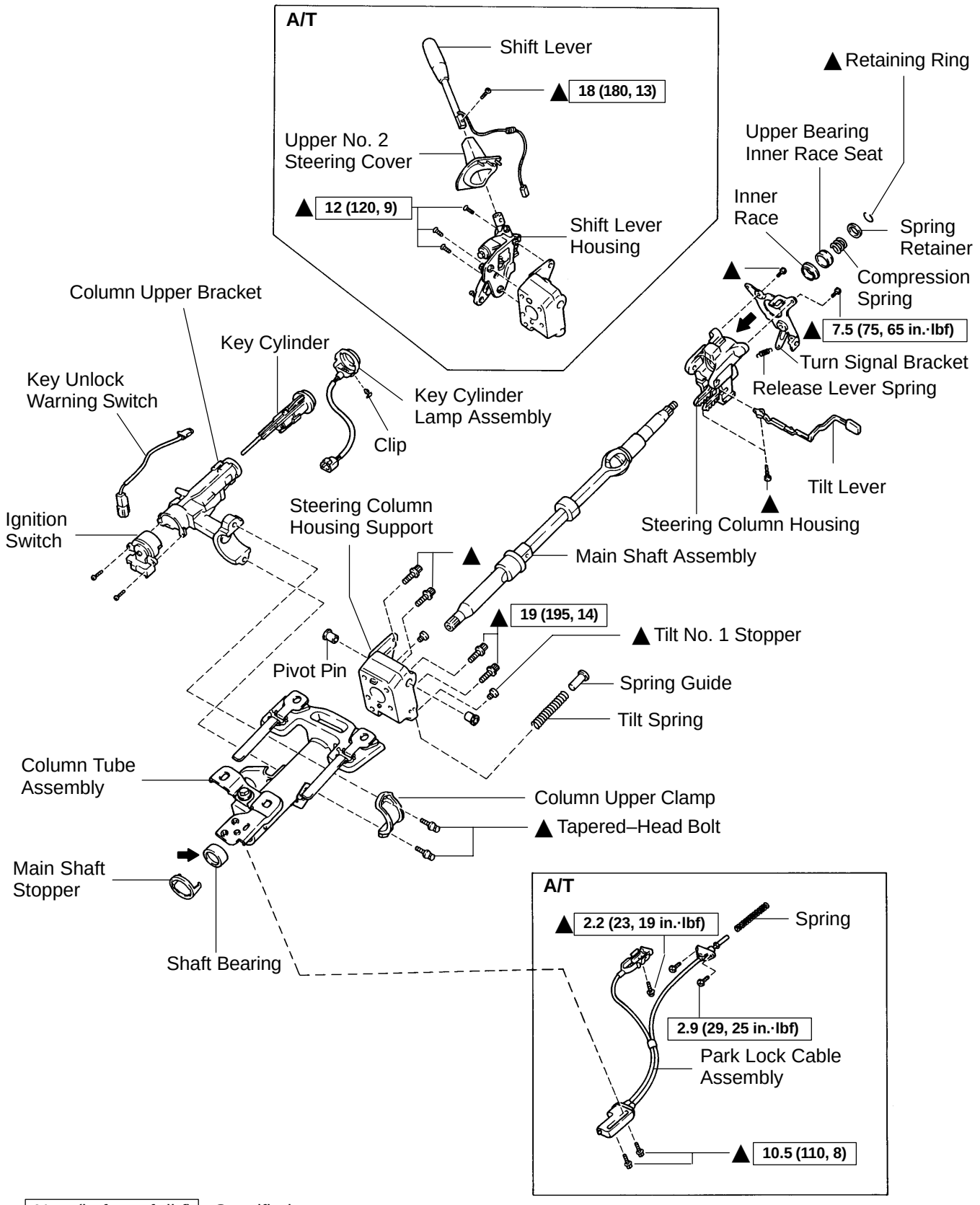

N·m (kgf·cm, ft·lbf) : Specified torque
▲ Non–reusable part
⬅ Molybdenum disulfide lithium base grease

N

F14449

SR0V0–04

REMOVAL

1. REMOVE STEERING WHEEL PAD

NOTICE:

If the airbag connector is disconnected with the ignition switch at ON or ACC, DTCs will be recorded.

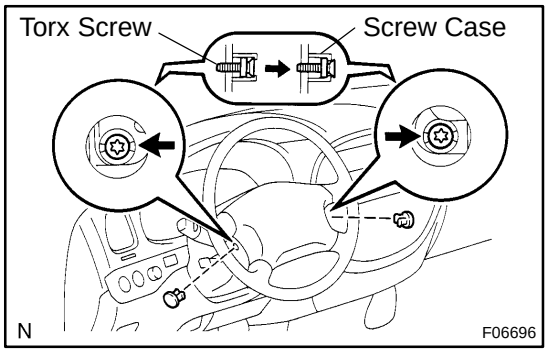

(a) Place the front wheels facing straight ahead.

(b) Remove the 2 steering wheel lower No. 2 covers.

(c) Using a torx socket wrench, loosen the 2 torx screws.

HINT:

Loosen the screw until the groove along the screw circumference catches on the screw case.

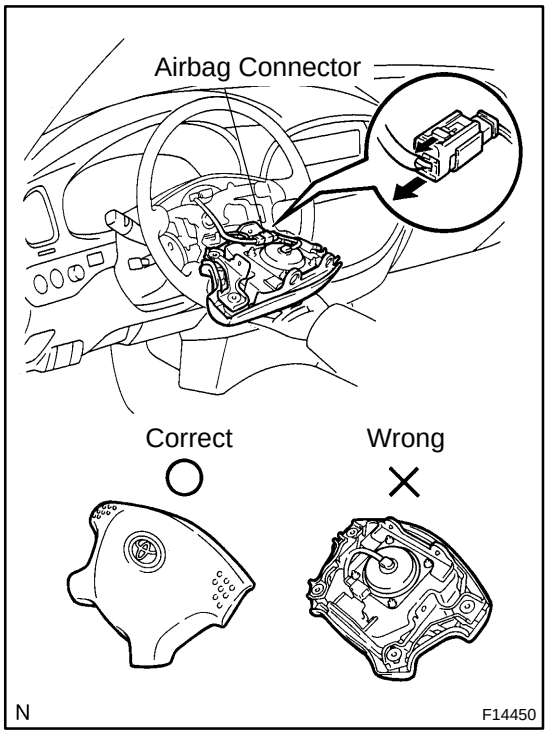

(d) Pull out the wheel pad from the steering wheel and disconnect the airbag connector and horn connector.

CAUTION:

- **When storing the wheel pad, keep the upper surface of the pad facing upward.**
- **Never disassemble the wheel pad.**

NOTICE:

When removing the wheel pad, take care not to pull the airbag wire harness.

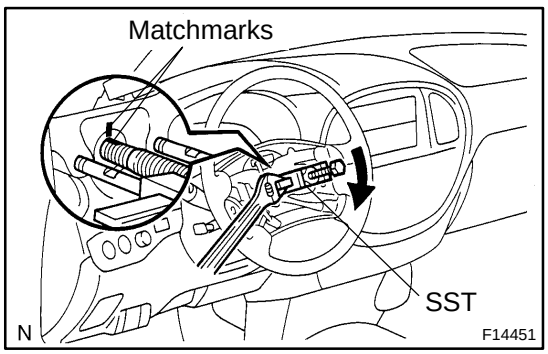

2. REMOVE STEERING WHEEL

(a) Remove the steering wheel set nut.

(b) Place matchmarks on the steering wheel and main shaft assembly.

(c) Using SST, remove the wheel.

SST 09950–50013 (09951–05010, 09952–05010, 09953–05020, 09954–05021)

(d) Disconnect the connector.

3. REMOVE UPPER AND LOWER COLUMN COVERS

Remove the 3 screws, upper and lower column covers.

4. REMOVE COMBINATION SWITCH WITH SPIRAL CABLE

(a) M/T:
Disconnect the 3 connectors.

(b) A/T:
Disconnect the 4 connectors.

(c) Disconnect the airbag connector.

(d) Remove the 3 screws and combination switch.

5. REMOVE SPIRAL CABLE (See page BE–17)

NOTICE:

Do not disassemble the cable or apply oil to it.

6. REMOVE LOWER LH FINISH PANEL

(a) Remove the 2 screws and disconnect the hood lock release lever from the panel.

(b) Remove the 4 panel set bolts and lower LH finish panel.

7. REMOVE NO. 2 HEATER TO REGISTER DUCT

8. REMOVE BRAKE PEDAL RETURN SPRING

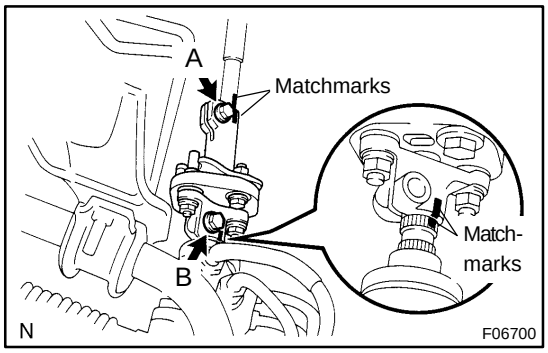

9. REMOVE NO. 2 INTERMEDIATE SHAFT ASSEMBLY

(a) Place matchmarks on the No. 2 universal joint assembly and No. 2 intermediate shaft assembly.

(b) Remove the "A" bolt.

(c) Place matchmarks on the No. 2 intermediate shaft assembly and control valve shaft.

(d) Remove the "B" bolt.

(e) Slide the No. 2 intermediate shaft assembly and remove the No. 2 intermediate shaft assembly.

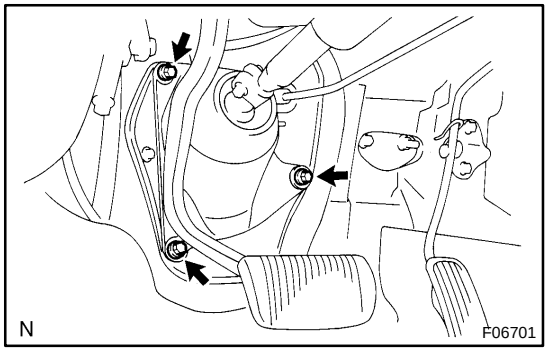

10. REMOVE COLUMN HOLE COVER NO. 2

Remove the 3 bolts and column hole cover No. 2.

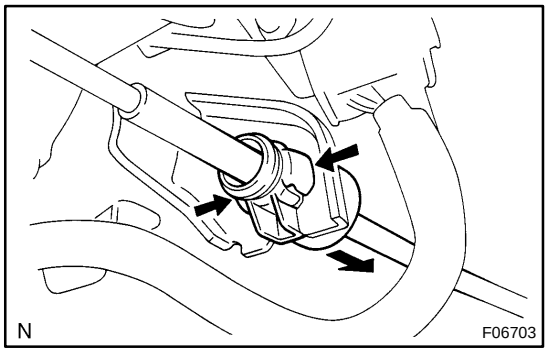

11. A/T:
DISCONNECT TRANSMISSION CONTROL CABLE ASSEMBLY

Disconnect the cable assembly from the column shift lever assembly.

12. REMOVE STEERING COLUMN ASSEMBLY WITH NO. 2 UNIVERSAL JOINT ASSEMBLY

(a) Disconnect the connectors.

(b) Remove the 4 steering column set nuts.

(c) Pull out the steering column assembly with No. 2 universal joint assembly.

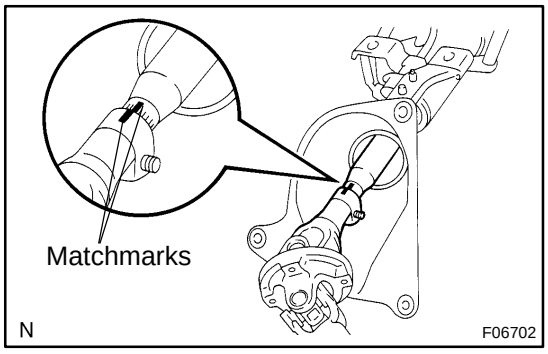

13. DISCONNECT NO. 2 UNIVERSAL JOINT ASSEMBLY

(a) Place matchmarks on the steering column assembly and No. 2 universal joint assembly.

(b) Remove the bolt.

(c) Remove the column hole cover No. 2.

SR0V1–02

DISASSEMBLY

NOTICE:

When using a vise, do not overtighten it.

1. REMOVE KEY CYLINDER LAMP ASSEMBLY

Remove the clip with key cylinder lamp assembly.

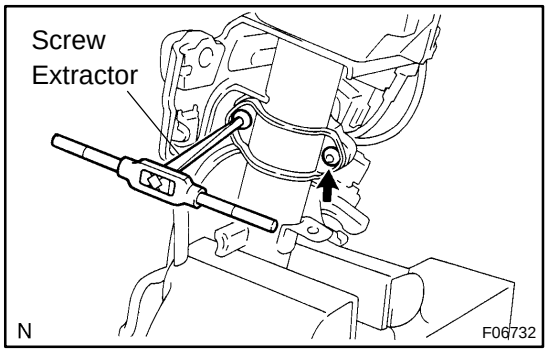

2. REMOVE COLUMN UPPER BRACKET AND COLUMN UPPER CLAMP

(a) Using a centering punch, mark the center of the 2 tapered–head bolts.

(b) Using a 3–4 mm (0.12–0.16 in.) drill, drill into the 2 bolts.

(c) Using a screw extractor, remove the 2 bolts, column upper bracket and column upper clamp.

3. A/T:

REMOVE SHIFT LEVER

Remove the screw and shift lever.

4. A/T:

REMOVE UPPER NO. 2 STEERING COVER

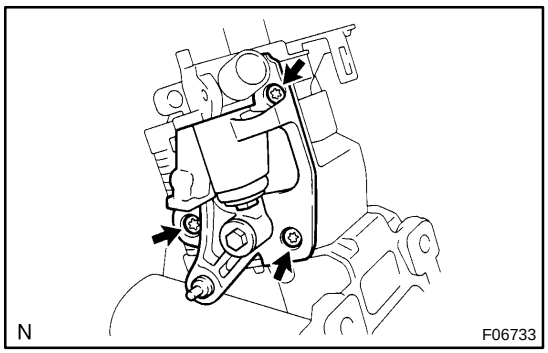

5. A/T:

REMOVE PARK LOCK CABLE ASSEMBLY

(See page AT–23)

6. A/T:

REMOVE SHIFT LEVER HOUSING

Remove the 3 torx screws and shift lever housing.

7. Tilt steering column:

REMOVE RELEASE LEVER SPRING

8. REMOVE TURN SIGNAL BRACKET

Remove the 2 torx screws and turn signal bracket.

9. Non–tilt steering column:

REMOVE COLUMN UPPER TUBE WITH MAIN SHAFT ASSEMBLY

(a) Remove the 4 torx bolts.

(b) Remove the column upper tube with the main shaft assembly from the column tube assembly.

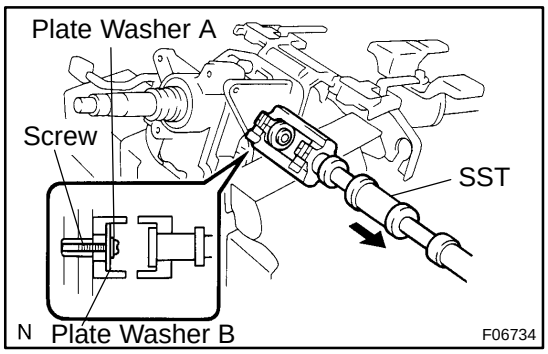

10. Tilt steering column:
REMOVE STEERING COLUMN HOUSING WITH MAIN SHAFT ASSEMBLY

(a) Set SST, plate washer (18 and 36 mm outer diameter) and screw (4.0 mm diameter, 0.7 mm pitch, 15.0 mm length), as shown in the illustration. And then remove the 2 pivot pins.
SST 09910–00015 (09911–00011, 09912–00010)
Reference
Plate washer A (18 mm): 90562 – 04012
Plate washer B (36 mm): 90201 – 10201
Screw: 90154 – 40015

(b) Remove the column housing with the shaft assembly from the column tube assembly.

NOTICE:
Do not bend the universal joint of the main shaft assembly more than 15˚.

(c) Remove the tilt spring and spring guide.

11. Tilt steering column:
REMOVE STEERING COLUMN HOUSING SUPPORT

(a) Remove the 4 torx bolts.
(b) Remove the 2 tilt No.1 stoppers and steering column housing support.

12. REMOVE MAIN SHAFT STOPPER

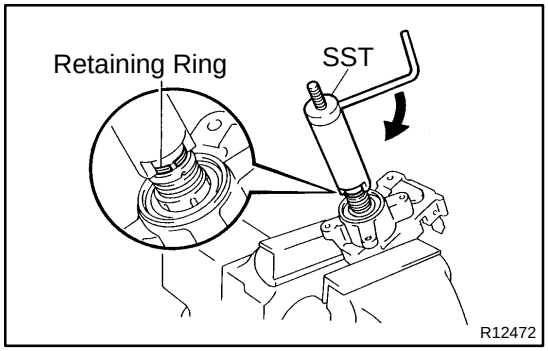

13. REMOVE MAIN SHAFT ASSEMBLY

(a) Install SST to the main shaft assembly, as shown in the illustration.
SST 09612–07010

(b) Using SST, compress the compression spring.

NOTICE:
Do not bend the universal joint of the shaft assembly more than 15˚.

HINT:
Hold the shaft assembly with your hand so that it does not rotate.

(c) Using a screwdriver, remove the retaining ring.
(d) Non–tilt steering column:
Remove the spring retainer and compression spring.
(e) Tilt steering column:
Remove the spring retainer, compression spring, upper bearing inner race seat and inner race.

SR0V2–02

INSPECTION

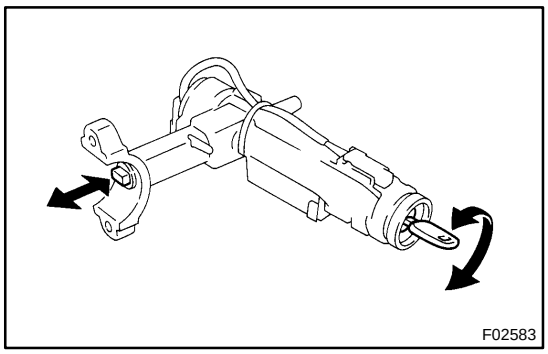

1. INSPECT STEERING LOCK OPERATION

Check that the steering lock mechanism operates properly.

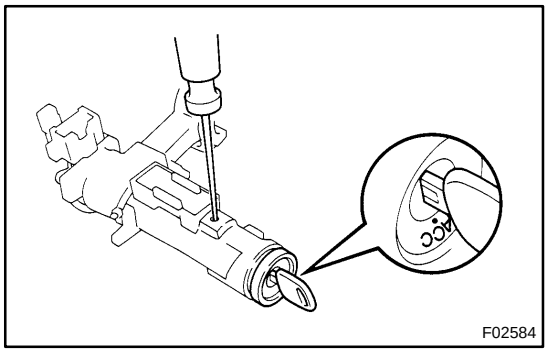

2. IF NECESSARY, REPLACE KEY CYLINDER

(a) Place the ignition key at the ACC position.

(b) Push down the stop pin with a screwdriver, and pull out the cylinder.

(c) Install a new cylinder.

HINT:

Make sure the key is at the ACC position.

3. INSPECT IGNITION SWITCH (See page BE–15)

4. IF NECESSARY, REPLACE IGNITION SWITCH

(a) Remove the 2 screws and ignition switch.

(b) Install a new ignition switch with the 2 screws.

5. INSPECT KEY UNLOCK WARNING SWITCH (See page BE–15)

6. IF NECESSARY, REPLACE KEY UNLOCK WARNING SWITCH

(a) Slide out the key unlock warning switch.

(b) Install a new key unlock warning switch.

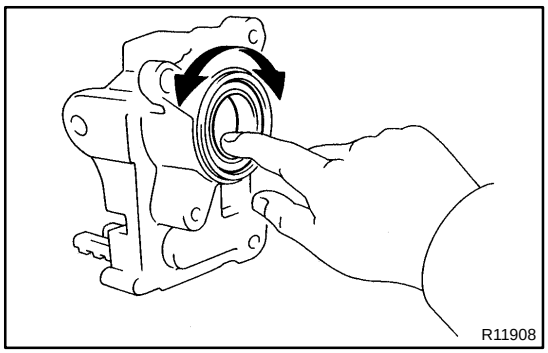

7. A/T:

INSPECT BEARING

(a) Check the bearing rotation condition and check for abnormal noise.

If faulty, replace the column housing.

(b) Coat the bearing with molybdenum disulfide lithium base grease.

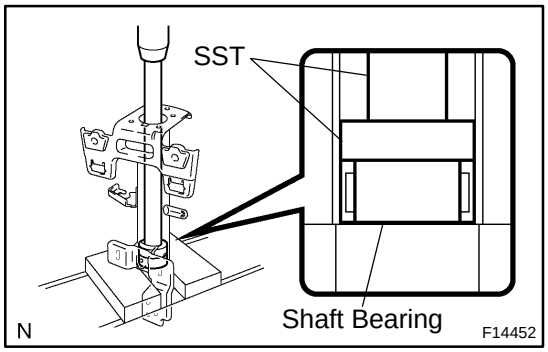

8. IF NECESSARY, REPLACE SHAFT BEARING

(a) Using SST, press out the shaft bearing.

SST 09950–60010 (09951–00430), 09950–70010 (09951–07360)

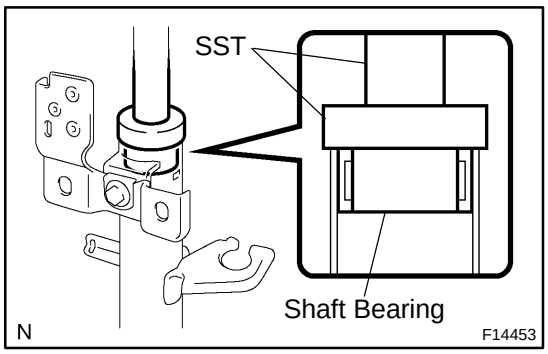

(b) Coat a new shaft bearing with molybdenum disulfide lithium base grease.

(c) Using SST, press in the shaft bearing.
SST 09950–60010 (09951–00460),
09950–70010 (09951–07150)

SR0V3–02

REASSEMBLY

NOTICE:

When using a vise, do not overtighten it.

1. COAT PARTS INDICATED BY ARROWS WITH MOLYBDENUM DISULFIDE LITHIUM BASE GREASE (See page SR–12)

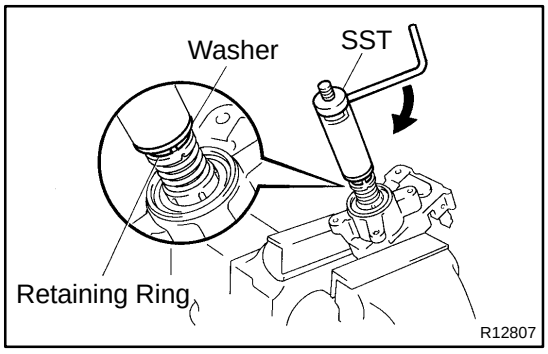

2. INSTALL MAIN SHAFT ASSEMBLY

(a) Non–tilt steering column:
Install the compression spring and spring retainer.

(b) Tilt steering column:
Install the inner race, upper bearing inner race seat, compression spring and spring retainer.

(c) Install a new retaining ring to the main shaft assembly.

(d) Install the washer of SST to the main shaft assembly.

(e) Install SST to the main shaft assembly, as shown in the illustration.
SST 09612–07010

(f) Using SST, push down the retaining ring until it fits into the shaft groove and install the main shaft assembly.

NOTICE:

Do not bend the universal joint of the shaft assembly more than 15˚.

HINT:

Hold the main shaft assembly with your hand so that it does not rotate.

3. INSTALL MAIN SHAFT STOPPER

4. Tilt steering column:
INSTALL STEERING COLUMN HOUSING SUPPORT

(a) Install the 2 new tilt No.1 stopper with the steering column housing support.

(b) Install 4 new torx bolts.
Torque: 19 N·m (195 kgf·cm, 14 ft·lbf)

5. Non–tilt steering column:
INSTALL COLUMN UPPER TUBE WITH MAIN SHAFT ASSEMBLY

(a) Install the column upper tube with the main shaft assembly to the column tube assembly.

(b) Install 4 new torx bolts.
Torque: 19 N·m (195 kgf·cm, 14 ft·lbf)

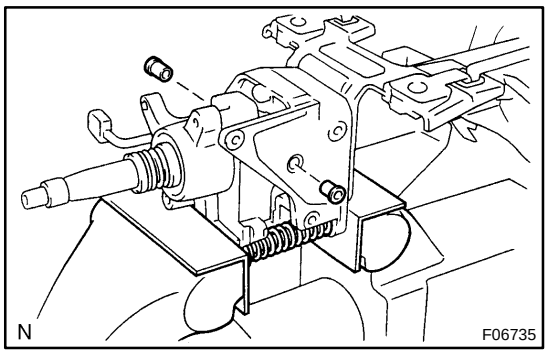

6. Tilt steering column:
INSTALL STEERING COLUMN HOUSING WITH MAIN SHAFT ASSEMBLY

(a) Install the steering column housing with the main shaft assembly into the column tube assembly.
(b) Install the tilt spring and spring guide.
(c) Using a vise to hold the steering column housing and steering column housing support.
(d) Temporarily install 2 new pivot pins.

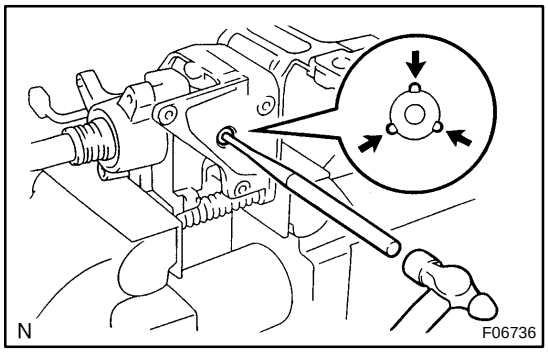

(e) Using a punch and a hammer, tap in the pivot pin.
(f) Using a pin punch, stake on 3 places evenly around the hole as shown in the illustration.

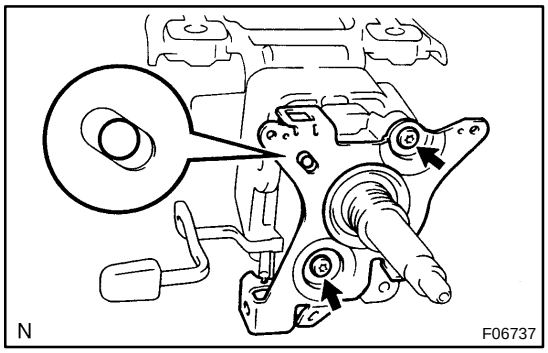

7. INSTALL TURN SIGNAL BRACKET

Install the turn signal bracket with 2 new torx screws.

Torque: 7.5 N·m (75 kgf·cm, 65 in.·lbf)

HINT:

Set the hole of the turn signal bracket and projection of steering column housing.

8. Tilt steering column:
INSTALL RELEASE LEVER SPRING

9. A/T:
INSTALL PARK LOCK CABLE ASSEMBLY (See page AT–24)

10. A/T:
INSTALL SHIFT LEVER HOUSING

Install the shift lever housing with 3 new torx screws.

Torque: 12 N·m (120 kgf·cm, 9 ft·lbf)

11. A/T:
INSTALL UPPER NO. 2 STEERING COVER

12. A/T:
INSTALL SHIFT LEVER

Install the shift lever with a new torx screw.

Torque: 18 N·m (180 kgf·cm, 13 ft·lbf)

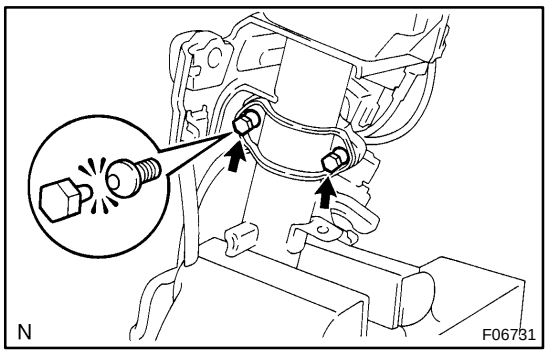

13. INSTALL COLUMN UPPER BRACKET AND COLUMN UPPER CLAMP

(a) Install the column upper bracket and column upper clamp with 2 new tapered–head bolts.

HINT:

Insert the bracket pin into the column tube hole.

(b) Tighten the tapered–head bolts until the bolt heads break off.

14. INSTALL KEY CYLINDER LAMP ASSEMBLY

Install the clip with the key cylinder lamp assembly.

SR0V4–02

INSTALLATION

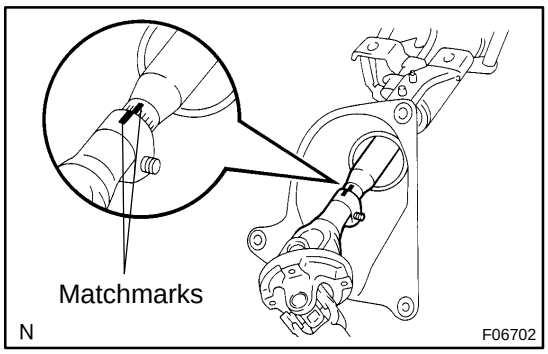

1. CONNECT NO. 2 UNIVERSAL JOINT ASSEMBLY

(a) Insert the column hole cover No. 2.

(b) Align the matchmarks on the column assembly and No. 2 universal joint assembly.

(c) Install the bolt.

Torque: 35 N·m (360 kgf·cm, 26 ft·lbf)

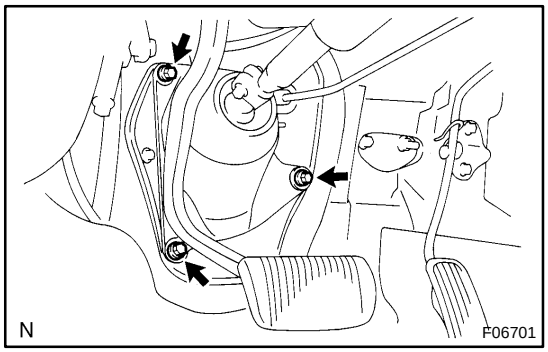

2. INSTALL STEERING COLUMN ASSEMBLY WITH NO. 2 UNIVERSAL JOINT ASSEMBLY

(a) Install the column assembly with No. 2 universal joint assembly.

(b) Install the 4 steering column set nuts.

Torque: 26 N·m (260 kgf·cm, 19 ft·lbf)

(c) Connect the connectors.

3. A/T:

CONNECT TRANSMISSION CONTROL CABLE ASSEMBLY

Connect the cable assembly to the shift lever assembly.

4. INSTALL COLUMN HOLE COVER NO. 2

Install the column hole cover No. 2 to body with the 3 bolts.

Torque: 8.0 N·m (82 kgf·cm, 71 ft·lbf)

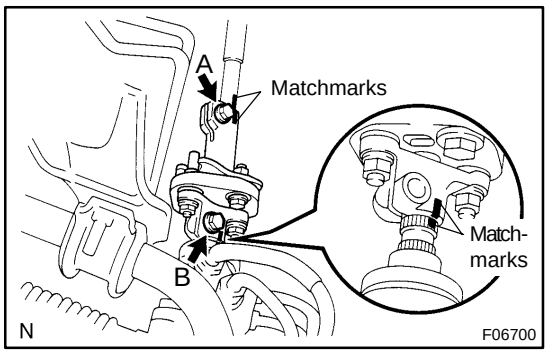

5. INSTALL NO. 2 INTERMEDIATE SHAFT ASSEMBLY

(a) Align the matchmarks on the No. 2 universal joint assembly and No. 2 intermediate shaft assembly.

(b) Align the matchmarks on the control valve shaft and No. 2 intermediate shaft assembly.

(c) Install the ”A” and ”B” bolts.

Torque: 35 N·m (360 kgf·cm, 26 ft·lbf)

6. INSTALL BRAKE PEDAL RETURN SPRING

7. INSTALL NO. 2 HEATER TO REGISTER DUCT

8. INSTALL LOWER LH FINISH PANEL

(a) Install the lower LH finish panel with the 4 bolts.

(b) Connect the hood lock release lever with the 2 screws.

9. INSTALL SPIRAL CABLE (See page BE–17)

10. INSTALL COMBINATION SWITCH WITH SPIRAL CABLE

(a) Install the combination switch with the 3 screws.
(b) Connect the airbag connector.
(c) M/T:
Connect the 3 connectors.
(d) A/T:
Connect the 4 connectors.

11. INSTALL UPPER AND LOWER COLUMN COVERS

Install the upper and lower column covers with the 3 screws.

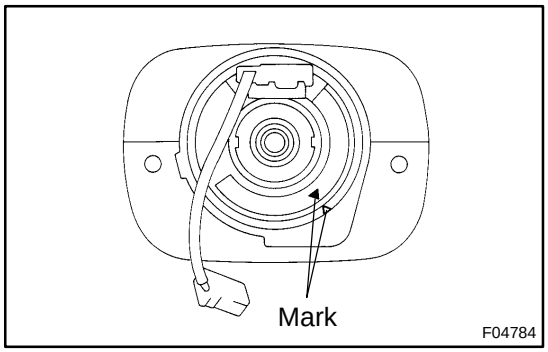

12. CENTER SPIRAL CABLE

(a) Check that the front wheels are facing straight ahead.
(b) Turn the cable counterclockwise by hand until it becomes harder to turn the cable.
(c) Then rotate the cable clockwise about 2.5 turns to align the mark.

HINT:
The cable will rotate about 2.5 turns to either left or right of the center.

13. INSTALL STEERING WHEEL

(a) Align the matchmarks on the wheel and main shaft.
(b) Install the wheel set nut.
Torque: 50 N·m (500 kgf·cm, 35 ft·lbf)
(c) Connect the connector.

14. INSTALL STEERING WHEEL PAD

NOTICE:

- **Never use airbag parts from another vehicle. When replacing parts, replace with new ones.**
- **Make sure the wheel pad is installed to the specified torque.**
- **If the wheel pad has been dropped, or there are cracks, dents or other defects in the case or connector, replace the wheel pad with a new one.**
- **When installing the wheel pad, take care that the wirings do not interfere with other parts and are not pinched between other parts.**
- **When installing the torx screws, take care that any scratches on the other parts (ex. cruise control switch, lower cover) are not made with the torx socket wrench.**

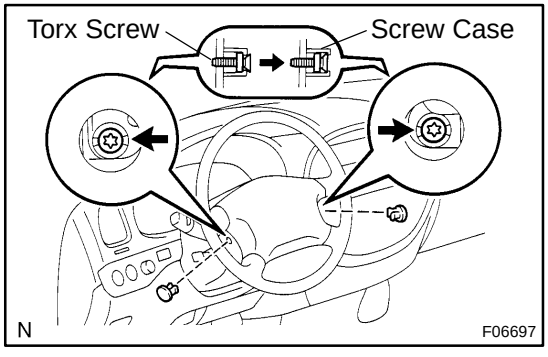

(a) Connect the airbag connector and horn connector.
(b) Install the wheel pad after confirming that the circumference groove of the torx screw is caught on the screw case.
(c) Using a torx socket wrench, torque the 2 screws holding down the upper surface of the wheel pad properly to prevent the wheel pad floating up.
Torque: 8.8 N·m (90 kgf·cm, 78 in.·lbf)
(d) Install the 2 steering wheel lower No. 2 covers.

15. CHECK STEERING WHEEL CENTER POINT

POWER STEERING VANE PUMP (5VZ–FE)

SR02H–03

COMPONENTS

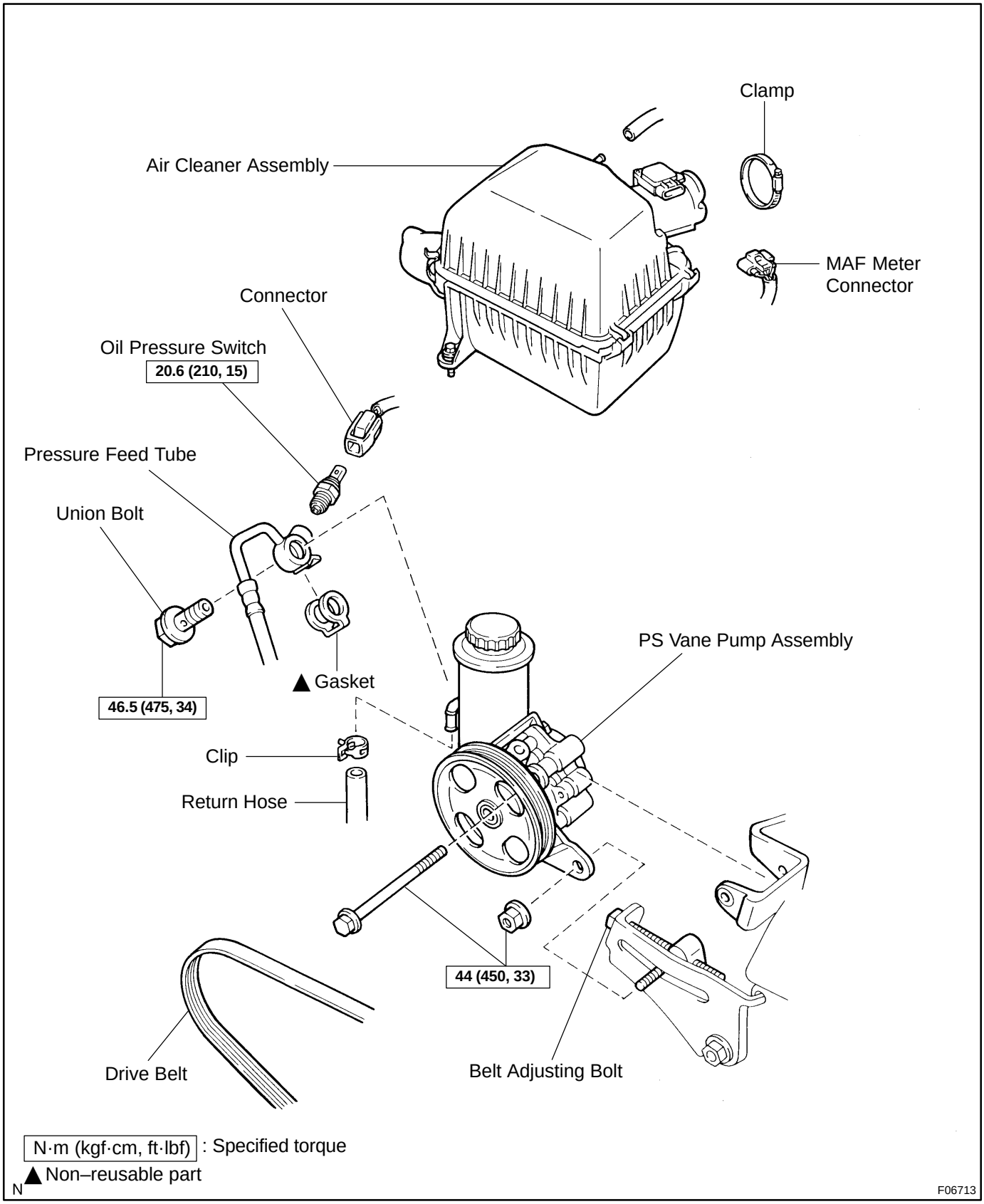

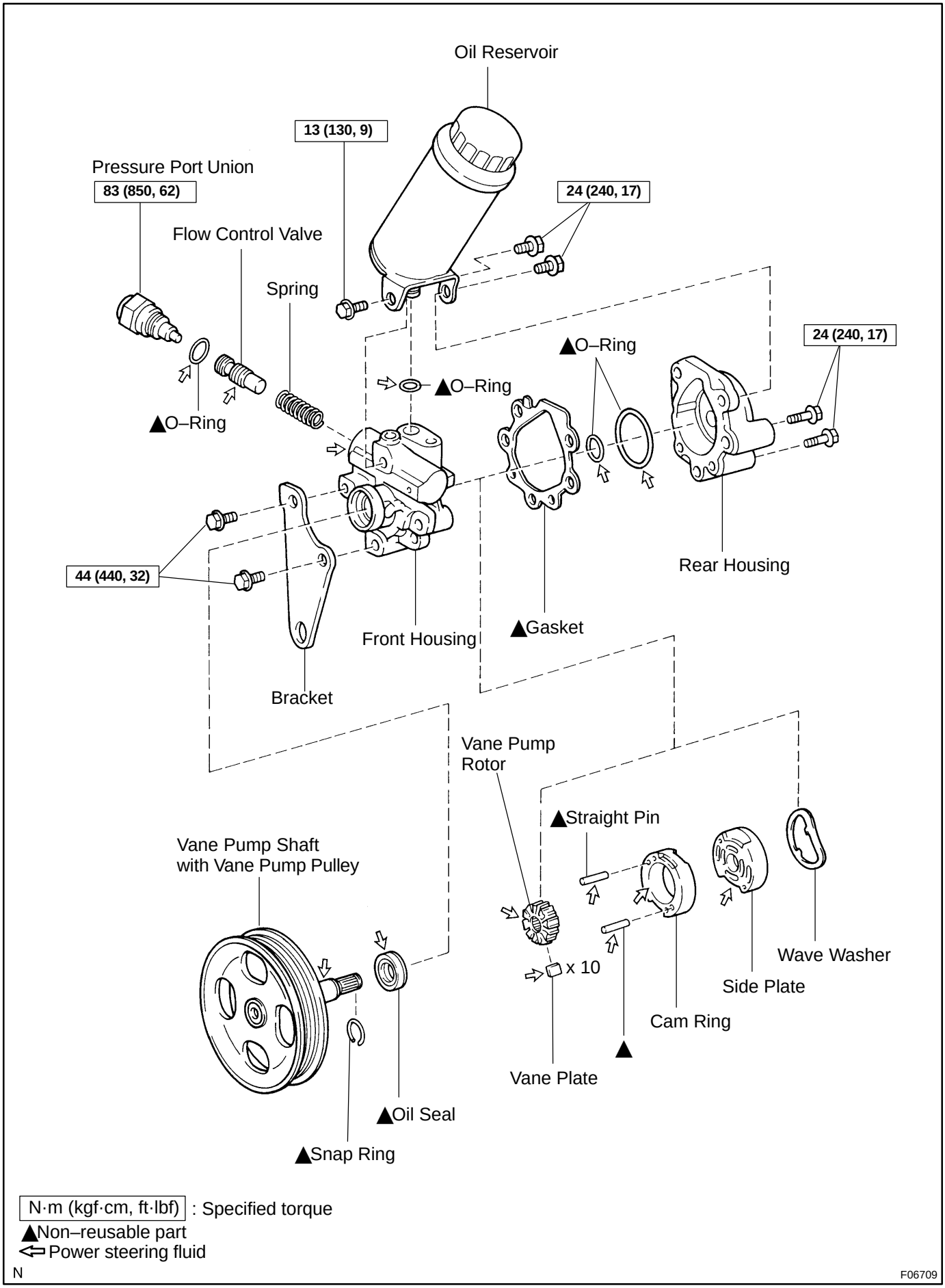
Oil Reservoir
13 (130, 9)
Pressure Port Union
83 (850, 62)
24 (240, 17)
Flow Control Valve
Spring
24 (240, 17)
▲O–Ring
▲O–Ring
▲O–Ring
44 (440, 32)
Rear Housing
Front Housing
▲Gasket
Bracket
Vane Pump Rotor
▲Straight Pin
Vane Pump Shaft with Vane Pump Pulley
x 10
Wave Washer
Side Plate
Cam Ring
▲
Vane Plate
▲Oil Seal
▲Snap Ring
N·m (kgf·cm, ft·lbf) : Specified torque
▲Non–reusable part
⇦ Power steering fluid
N
F06709

SR02I–03

REMOVAL

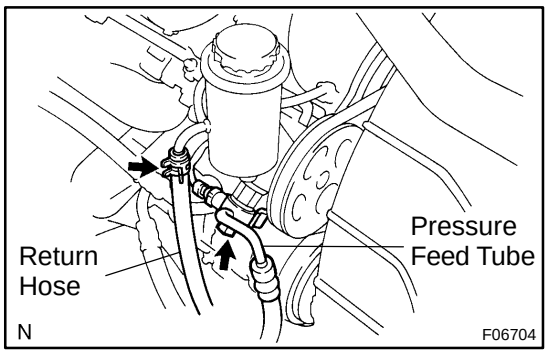

1. REMOVE AIR CLEANER ASSEMBLY

(a) Disconnect the MAF meter connector.

(b) Disconnect the hose.

(c) Remove the clamp

(d) Remove the 3 bolts and air cleaner assembly.

2. DISCONNECT RETURN HOSE

Remove the clip and disconnect the return hose.

NOTICE:

Take care not to spill fluid on the drive belt.

3. REMOVE OIL PRESSURE SWITCH

(a) Disconnect the connector.

(b) Remove the oil pressure switch from the pressure feed tube.

NOTICE:

Be careful not to drop the switch.

If the oil pressure switch is dropped or strongly damaged, replace it with a new one.

4. DISCONNECT PRESSURE FEED TUBE

Remove the union bolt and gasket, and disconnect the tube from the PS vane pump assembly.

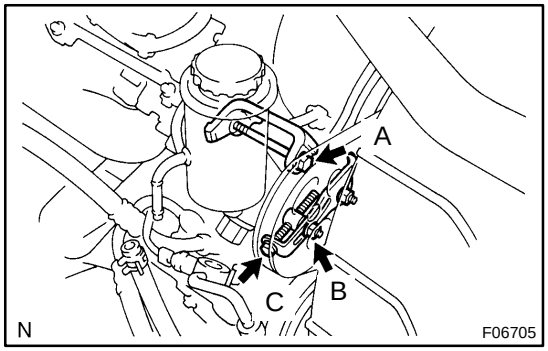

5. REMOVE DRIVE BELT

(a) Loosen the bolt ”A” and nut ”B”.

(b) Loosen the bolt ”C”.

6. REMOVE PS VANE PUMP ASSEMBLY

Remove the bolt ”A”, nut ”B” and PS vane pump assembly.

SR0V5–01

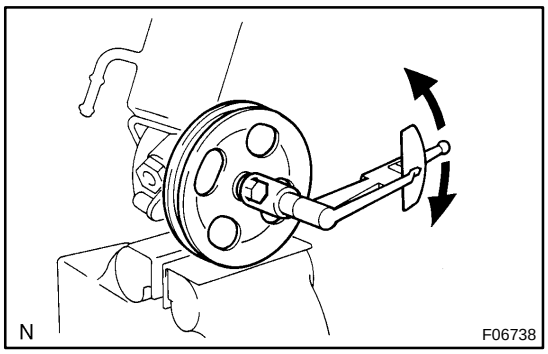

DISASSEMBLY

NOTICE:

When using a vise, do not overtighten it.

1. MEASURE PS VANE PUMP ROTATING TORQUE

(a) Check that the pump rotates smoothly without abnormal noise.

(b) Temporarily install the bolt.

(c) Using a torque wrench, check the pump rotating torque.

Rotating torque:

0.28 N·m (2.8 kgf·cm, 2.4 in.·lbf) or less

2. REMOVE OIL RESERVOIR

(a) Remove the 3 bolts and oil reservoir.

(b) Remove the O–ring from the oil reservoir.

3. REMOVE PRESSURE PORT UNION, FLOW CONTROL VALVE AND SPRING

(a) Remove the pressure port union, flow control valve and spring.

(b) Remove the O–ring from the pressure port union.

4. REMOVE BRACKET

Remove the 2 bolts and bracket.

5. REMOVE REAR HOUSING

(a) Remove the 2 bolts and rear housing.

(b) Remove the 2 O–rings from the rear housing.

6. REMOVE WAVE WASHER

7. REMOVE SIDE PLATE

8. REMOVE GASKET

9. REMOVE CAM RING, 10 VANE PLATES AND VANE PUMP ROTOR

(a) Using a screwdriver, remove the snap ring from the vane pump shaft.

(b) Remove the cam ring, 10 vane plates and vane pump rotor.

NOTICE:

Take care not to drop the plate.

10. REMOVE VANE PUMP SHAFT WITH VANE PUMP PULLEY

11. REMOVE STRAIGHT PINS

Remove the 2 straight pins from the front housing.

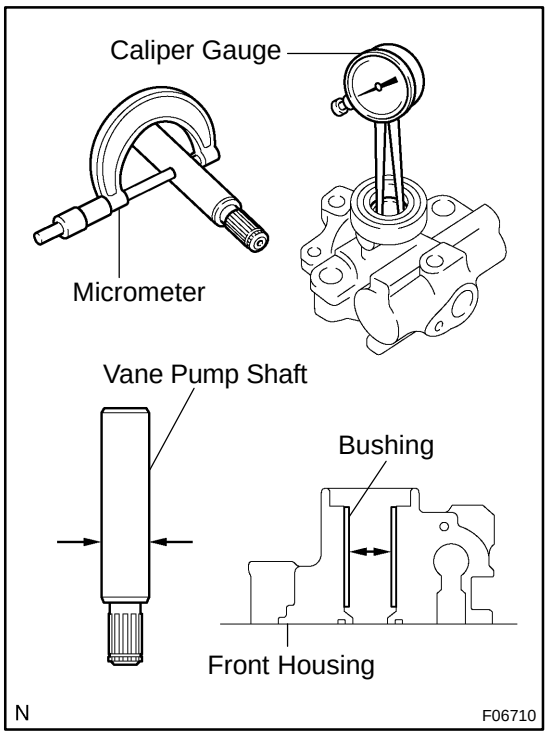

INSPECTION

1. CHECK OIL CLEARANCE BETWEEN VANE PUMP SHAFT AND BUSHING

Using a micrometer and caliper gauge, measure the oil clearance.

Standard clearance:
0.03 – 0.05 mm (0.0012 – 0.0020 in.)
Maximum clearance: 0.07 mm (0.0028 in.)

If it is more than the maximum, replace the shaft and front housing.

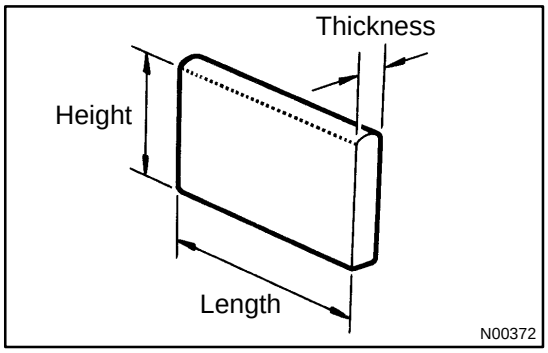

2. INSPECT VANE PUMP ROTOR AND VANE PLATES

(a) Using a micrometer, measure the height, thickness and length of the 10 plates.
Minimum height: 8.6 mm (0.339 in.)
Minimum thickness: 1.397 mm (0.0550 in.)
Minimum length: 14.991 mm (0.5902 in.)

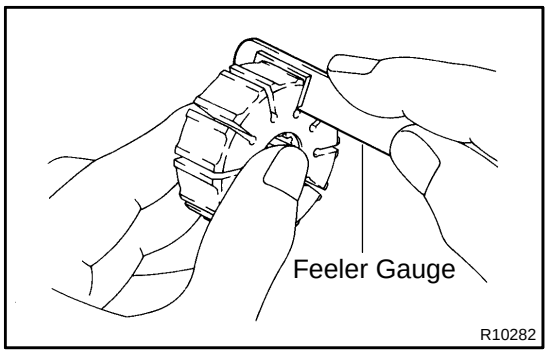

(b) Using a feeler gauge, measure the clearance between the rotor groove and plate.
Maximum clearance: 0.033 mm (0.0013 in.)

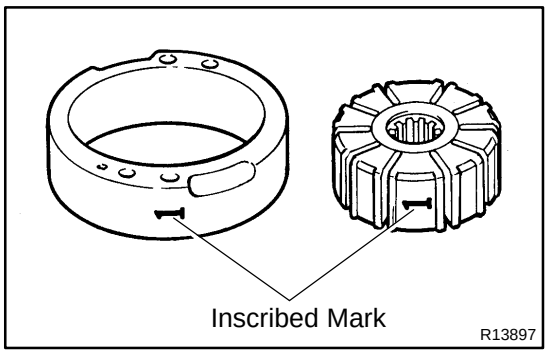

If it is more than the maximum, replace the plate and/or rotor with one having the same mark stamped on the cam ring.

Inscribed mark: 1, 2, 3, 4 or None

HINT:

There are 5 vane plate lengths corresponding to the following rotor and cam ring marks:

Rotor and cam ring mark	Vane plate part number	Vane plate length mm (in.)
None	44345–04010	14.999–15.001 (0.59051–0.59059)
1	44345–04020	14.997–14.999 (0.59043–0.59051)
2	44345–04030	14.995–14.997 (0.59035–0.59043)
3	44345–04040	14.993–14.995 (0.59027–0.59035)
4	44345–04050	14.991–14.993 (0.59020–0.59027)

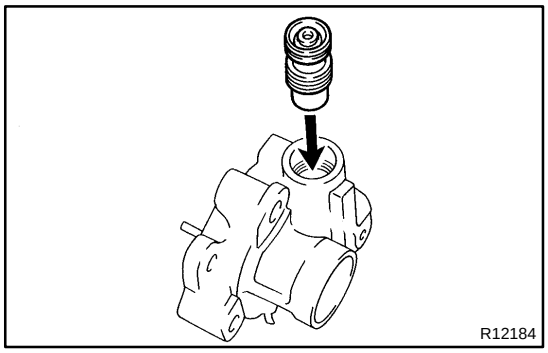

3. INSPECT FLOW CONTROL VALVE

(a) Coat the flow control valve with power steering fluid and check that it falls smoothly into the valve hole by its own weight.

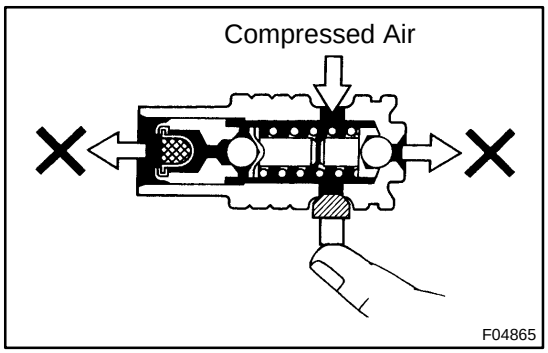

(b) Check the flow control valve for leakage. Close one of the holes and apply compressed air of 392–490 kPa (4–5 kgf/cm^2, 57–71 psi) into the opposite side hole, and confirm that air does not come out from the end holes.

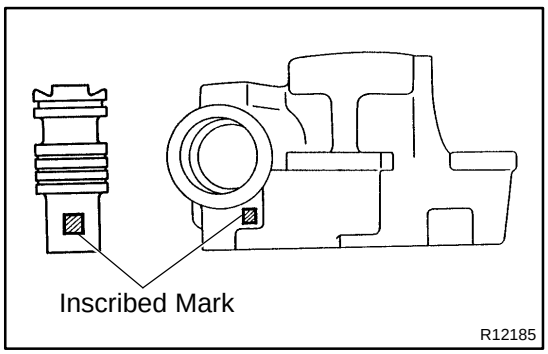

If necessary, replace the flow control valve with one having the same letter as inscribed on the front housing.

Inscribed mark: A, B, C, D, E or F

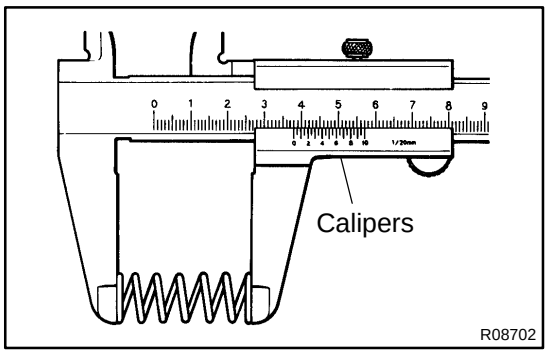

4. INSPECT SPRING

Using vernier calipers, measure the free length of the spring.

Minimum free length: 33.2 mm (1.307 in.)

If it is not within specification, replace the spring.

SR0S8–02

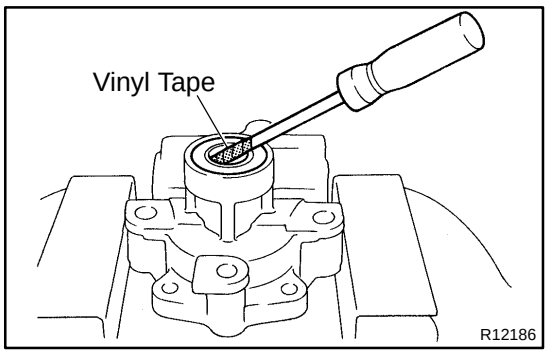

REPLACEMENT

NOTICE:

When using a vise, do not overtighten it.

IF NECESSARY, REPLACE OIL SEAL

(a) Using a screwdriver with vinyl tape wound around its tip, remove the oil seal.

NOTICE:

Be careful not to damage the bushing of the front housing.

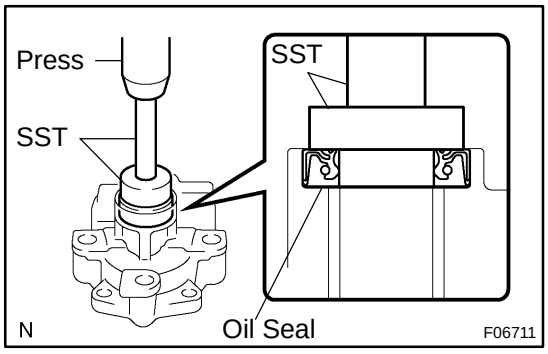

(b) Coat a new oil seal lip with power steering fluid.

(c) Using SST, press in the oil seal.

SST 09950–60010 (09951–00330),
09950–70010 (09951–07100)

NOTICE:

Make sure to install the oil seal facing in the correct direction.

SR0V6–01

REASSEMBLY

NOTICE:

When using a vise, do not overtighten it.

1. COAT PARTS INDICATED BY ARROWS WITH POWER STEERING FLUID (See page SR–30)

2. INSTALL STRAIGHT PINS

Using a plastic hammer, tap in 2 new straight pins to the front housing.

NOTICE:

Be careful not to damage the pins.

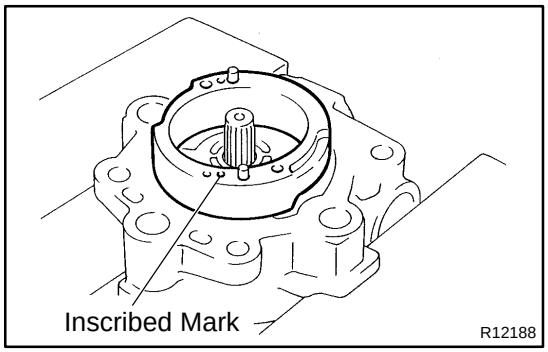

3. INSTALL VANE PUMP SHAFT WITH VANE PUMP PULLEY

4. INSTALL CAM RING

Align the holes of the ring and 2 straight pins, and install the ring with the inscribed mark facing outward.

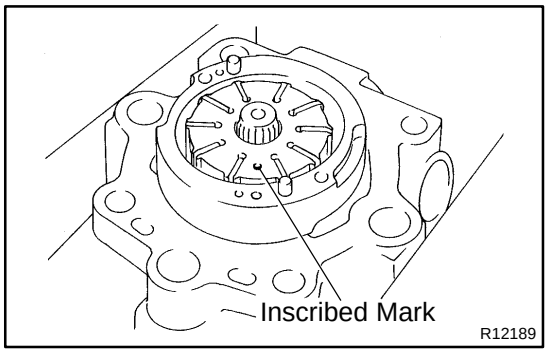

5. INSTALL VANE PUMP ROTOR

(a) Install the rotor with the inscribed mark facing outward.

(b) Install a new snap ring to the vane pump shaft.

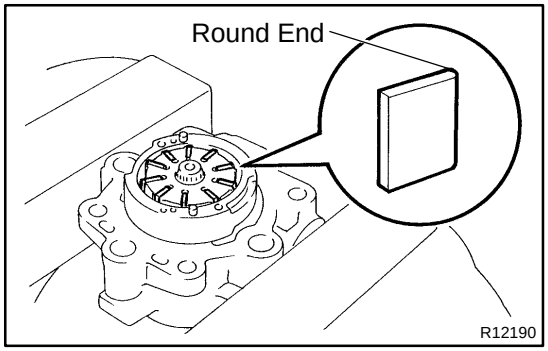

6. INSTALL VANE PLATES

Install the 10 plates with the round end facing outward.

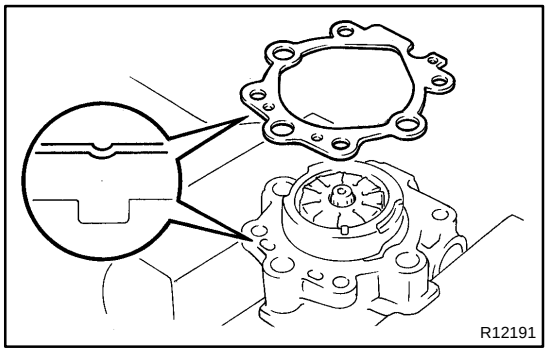

7. INSTALL GASKET

Install a new gasket on the front housing.

NOTICE:

Be careful of the direction of the gasket.

8. INSTALL SIDE PLATE

Align the holes of the side plate and 2 straight pins, and install the plate.

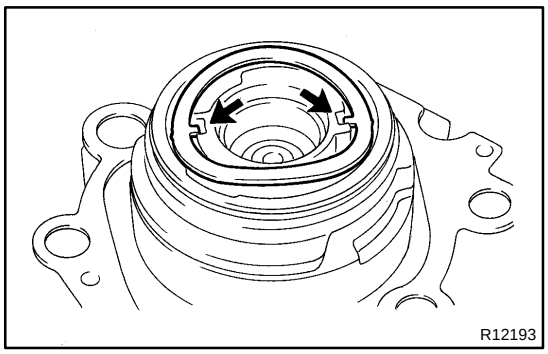

9. INSTALL WAVE WASHER

Install the wave washer so that its protrusions fit into the slots in the side plate.

10. INSTALL REAR HOUSING

(a) Coat 2 new O–rings with power steering fluid and install them to the housing.

(b) Install the rear housing with the 2 bolts.

Torque: 24 N·m (240 kgf·cm, 17 ft·lbf)

11. INSTALL SPRING, FLOW CONTROL VALVE AND PRESSURE PORT UNION

(a) Install the spring.

(b) Install the flow control valve facing in the correct direction (See page SR–30).

(c) Coat a new O–ring with power steering fluid and install it to the union.

(d) Install the pressure port union.

Torque: 83 N·m (850 kgf·cm, 62 ft·lbf)

12. INSTALL BRACKET

Install the bracket with the 2 bolts.

Torque: 44 N·m (440 kgf·cm, 32 ft·lbf)

13. INSTALL OIL RESERVOIR

(a) Coat a new O–ring with power steering fluid and install it to the oil reservoir.

(b) Install the oil reservoir with the 3 bolts.

Torque:
Front side bolt: 13 N·m (130 kgf·cm, 9 ft·lbf)
Rear side bolts: 24 N·m (240 kgf·cm, 17 ft·lbf)

14. MEASURE PS VANE PUMP ROTATING TORQUE (See page SR–33)

Author : Date : 1974

SR02M–04

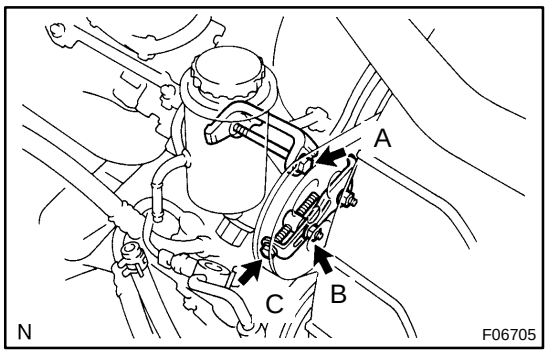

INSTALLATION

1. INSTALL PS VANE PUMP ASSEMBLY

Install the PS vane pump assembly, temporarily tighten the bolt "A" and nut "B".

2. INSTALL DRIVE BELT

(a) Tightening the bolt "C", adjust drive belt tension (See page SR–3).

(b) Torque the bolt "A" and nut "B".

Torque: 44 N·m (450 kgf·cm, 33 ft·lbf)

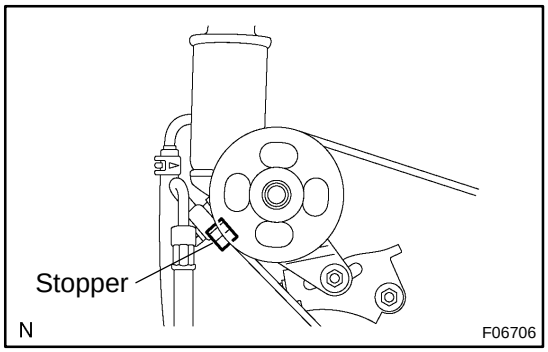

3. CONNECT PRESSURE FEED TUBE

(a) Connect the pressure feed tube.

(b) Install a new gasket and the union bolt to the pressure feed tube.

HINT:

Make sure the stopper of the pressure feed tube is touches the PS vane pump body as shown in the illustration, then torque the union bolt.

Torque: 46.5 N·m (475 kgf·cm, 34 ft·lbf)

4. INSTALL OIL PRESSURE SWITCH

(a) Install the oil pressure switch to the pressure feed tube.

Torque: 20.6 N·m (210 kgf·cm, 15 ft·lbf)

(b) Connect the connector.

NOTICE:

Be careful of a spot like oil on the switch.

5. CONNECT RETURN HOSE

Connect the return hose with the clip.

6. INSTALL AIR CLEANER ASSEMBLY

(a) Install the air cleaner assembly with hose and the 3 bolts.

(b) Install the clamp.

(c) Connect the hose.

(d) Connect the MAF meter connector.

7. BLEED POWER STEERING SYSTEM (See page SR–4)

POWER STEERING VANE PUMP (2UZ–FE)

SR0MD–04

COMPONENTS

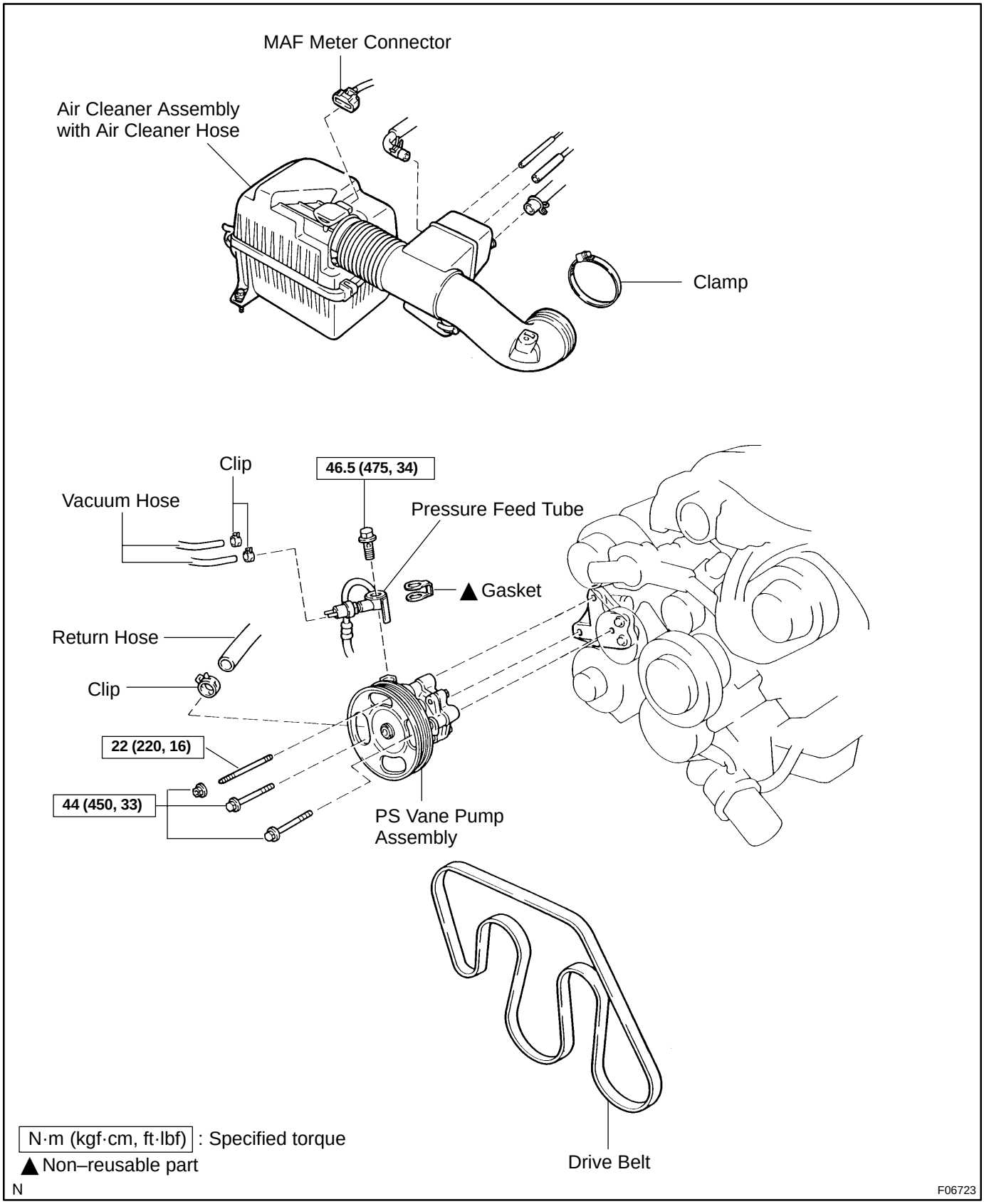

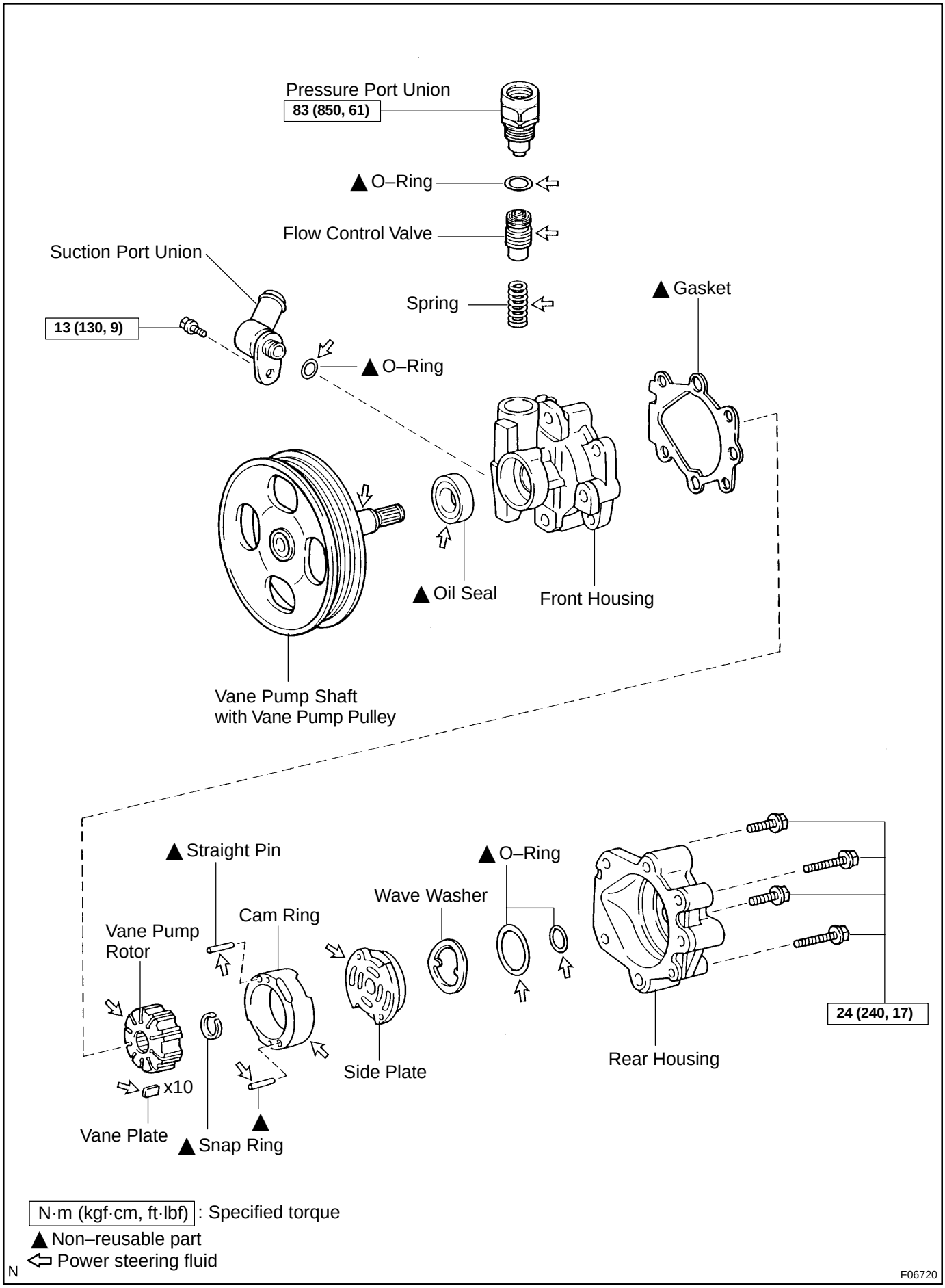
Pressure Port Union
83 (850, 61)
▲ O–Ring
Flow Control Valve
Suction Port Union
Spring
▲ Gasket
13 (130, 9)
▲ O–Ring
▲ Oil Seal
Front Housing
Vane Pump Shaft
with Vane Pump Pulley
▲ Straight Pin
▲ O–Ring
Wave Washer
Cam Ring
Vane Pump
Rotor
24 (240, 17)
Side Plate
Rear Housing
x10
Vane Plate
▲ Snap Ring
N·m (kgf·cm, ft·lbf) : Specified torque
▲ Non–reusable part
⇦ Power steering fluid
N
F06720

SR0ME–04

REMOVAL

1. REMOVE AIR CLEANER ASSEMBLY WITH AIR CLEANER HOSE

(a) Disconnect the MAF meter connector.
(b) Disconnect the hoses.
(c) Remove the clamp.
(d) Remove the 3 bolts and air cleaner assembly with air cleaner hose.

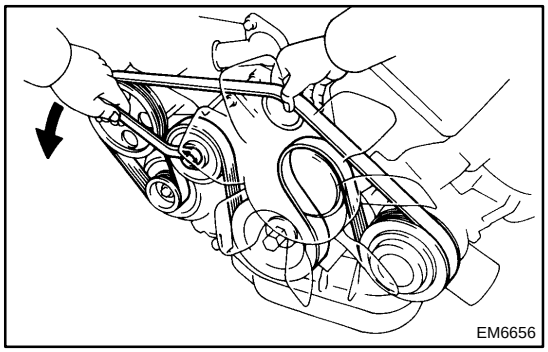
EM6656

2. REMOVE DRIVE BELT

Loosen the drive belt tension by turning the drive belt tensioner counterclockwise, and remove the drive belt.

3. DISCONNECT 2 VACUUM HOSES

Remove the 2 clips and disconnect the 2 vacuum hoses.

4. DISCONNECT RETURN HOSE

Remove the clip and disconnect the return hose.

5. DISCONNECT PRESSURE FEED TUBE

Remove the union bolt and gasket, disconnect the pressure feed tube.

6. REMOVE PS VANE PUMP ASSEMBLY

Remove the 2 bolts, nut, stud bolt and PS vane pump assembly.

SR0V7–01

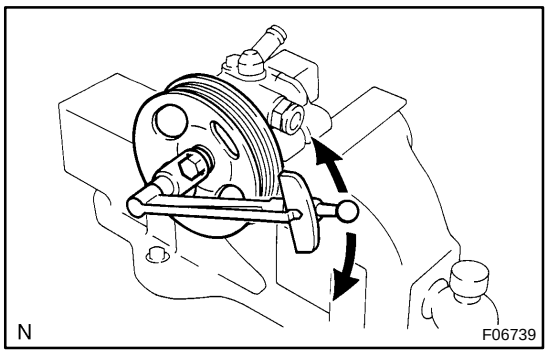

DISASSEMBLY

NOTICE:

When using a vise, do not overtighten it.

1. MEASURE PS VANE PUMP ROTATING TORQUE

(a) Check that the pump rotates smoothly without abnormal noise.

(b) Temporarily install the bolt.

(c) Using a torque wrench, check the pump rotating torque.

Rotating torque:

0.28 N·m (2.8 kgf·cm, 2.4 in.·lbf) or less

2. REMOVE SUCTION PORT UNION

(a) Remove the bolt and suction port union.

(b) Remove the O–ring from the union.

3. REMOVE PRESSURE PORT UNION, FLOW CONTROL VALVE AND SPRING

(a) Remove the pressure port union, flow control valve and spring.

(b) Remove the O–ring from the pressure port union.

4. REMOVE REAR HOUSING

(a) Remove the 4 bolts and rear housing.

HINT:

If the wave washer and side plate are stuck to the rear housing, lightly tap the rear housing with a plastic hammer, and remove the wave washer and side plate.

(b) Remove the 2 O–rings from the rear housing.

5. REMOVE WAVE WASHER

6. REMOVE SIDE PLATE

7. REMOVE GASKET

8. REMOVE CAM RING, 10 VANE PLATES AND VANE PUMP ROTOR

(a) Using a screwdriver, remove the snap ring from the vane pump shaft.

(b) Remove the cam ring, 10 vane plates and vane pump rotor.

NOTICE:

Be careful not to drop the plate.

9. REMOVE VANE PUMP SHAFT WITH VANE PUMP PULLEY

10. REMOVE STRAIGHT PINS

Remove the 2 pins from the front housing.

SR0RF–02

INSPECTION

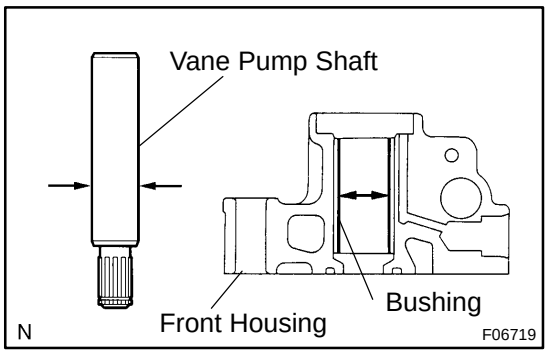

1. CHECK OIL CLEARANCE BETWEEN VANE PUMP SHAFT AND BUSHING

Using a micrometer and caliper gauge, measure the oil clearance.

Standard clearance:
0.03 – 0.05 mm (0.0012 – 0.0020 in.)
Maximum clearance: 0.07 mm (0.0028 in.)

If it is more than the maximum, replace the shaft and front housing.

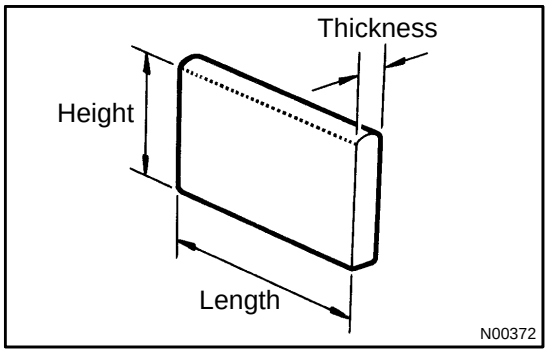

2. INSPECT VANE PUMP ROTOR AND VANE PLATES

(a) Using a micrometer, measure the height, thickness and length of the 10 plates.

Minimum height: 8.6 mm (0.339 in.)
Minimum thickness: 1.397 mm (0.0550 in.)
Minimum length: 14.991 mm (0.5902 in.)

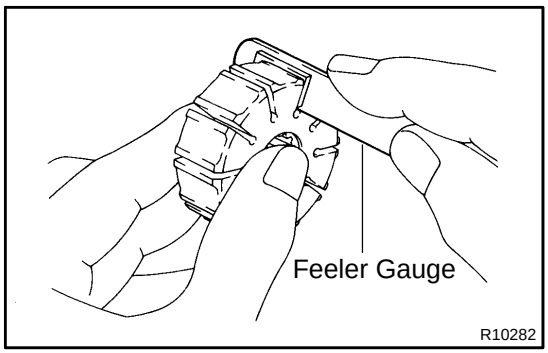

(b) Using a feeler gauge, measure the clearance between the rotor groove and plate.

Maximum clearance: 0.033 mm (0.0013 in.)

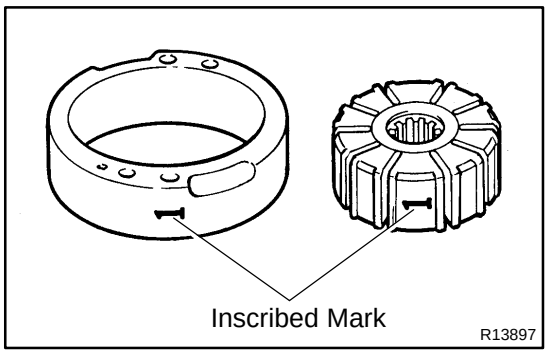

If it is more than the maximum, replace the plate and/or rotor with one having the same mark stamped on the cam ring.

Inscribed mark: 1, 2, 3, 4 or None

HINT:

There are 5 vane plate lengths with the following rotor and cam ring marks:

Rotor and cam ring mark	Vane plate part number	Vane plate length mm (in.)
None	44345–04010	14.999–15.001 (0.59051–0.59059)
1	44345–04020	14.997–14.999 (0.59043–0.59051)
2	44345–04030	14.995–14.997 (0.59035–0.59043)
3	44345–04040	14.993–14.995 (0.59027–0.59035)
4	44345–04050	14.991–14.993 (0.59020–0.59027)

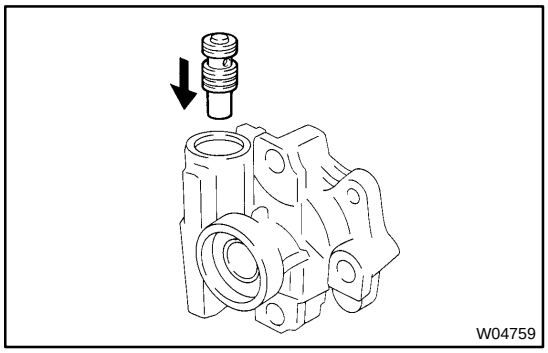

3. INSPECT FLOW CONTROL VALVE

(a) Coat the valve with power steering fluid and check that it falls smoothly into the valve hole by its own weight.

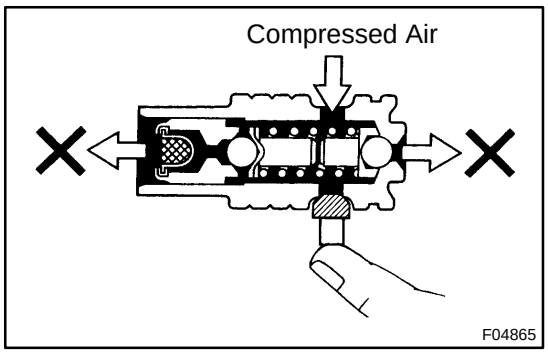

(b) Check the flow control valve for leakage.
Close one of the holes and apply compressed air 392–490 kPa (4–5 kgf/cm^2, 57–71 psi) into the opposite side, and confirm that air does not come out from the end holes.

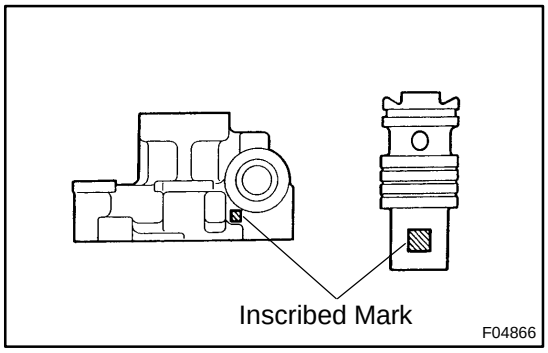

If necessary, replace the valve with one having the same letter as inscribed on the front housing.

Inscribed mark: A, B, C, D, E or F

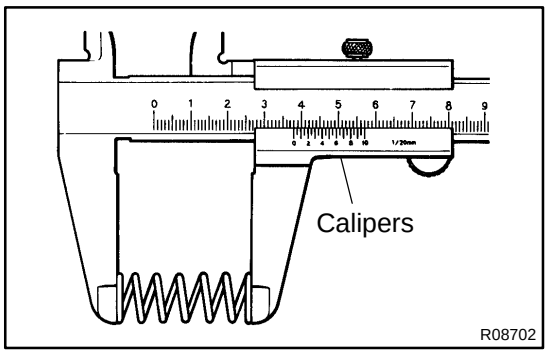

4. INSPECT SPRING

Using vernier calipers, measure the free length of the spring.

Minimum free length: 33.2 mm (1.307 in.)

If it is not within the specification, replace the spring.

SR0RG–02

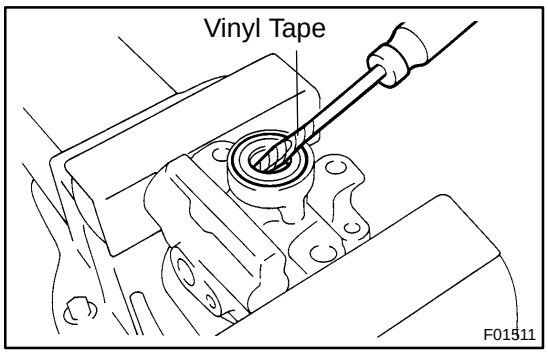

REPLACEMENT

NOTICE:

When using a vise, do not overtighten it.

IF NECESSARY, REPLACE OIL SEAL

(a) Using a screwdriver with vinyl tape wound around its tip, remove the oil seal.

NOTICE:

Be careful not to damage the front housing.

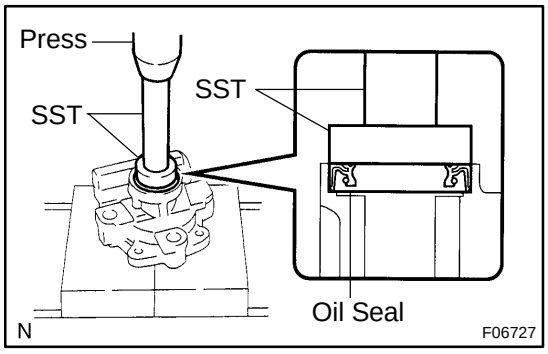

(b) Coat a new oil seal lip with power steering fluid.

(c) Using SST, press in the oil seal.

SST 09950–60010 (09951–00330),
09950–70010 (09951–07100)

NOTICE:

Make sure to install the oil seal facing in the correct direction.

SR0V8–01

REASSEMBLY

NOTICE:

When using a vise, do not overtighten it.

1. COAT PARTS INDICATED BY ARROWS WITH POWER STEERING FLUID (See page SR–41)

2. INSTALL VANE PUMP SHAFT WITH VANE PUMP PULLEY

3. INSTALL STRAIGHT PINS

Using a plastic hammer, tap in 2 new pins to the front housing.

NOTICE:

Be careful not to damage the pins.

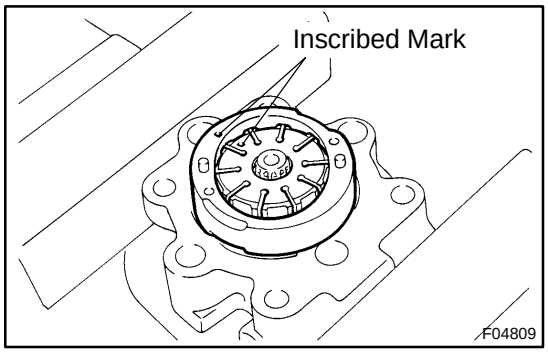

4. INSTALL CAM RING

Install the cam ring with the inscribed mark facing outward.

HINT:

Align the holes of the cam ring with the straight pins.

5. INSTALL VANE PUMP ROTOR

(a) Install the vane pump rotor with the inscribed mark facing outward.

(b) Install a new snap ring to the vane pump shaft.

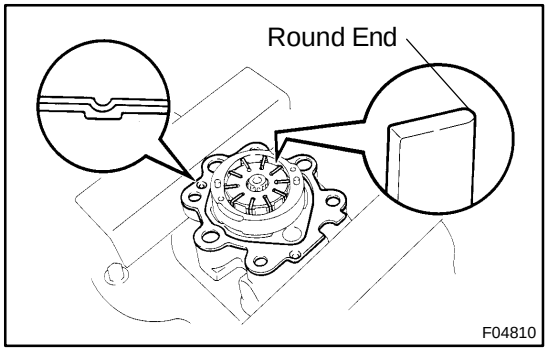

6. INSTALL VANE PLATES AND GASKET

(a) Install the 10 plates with the round end facing outward.

(b) Install a new gasket on the front housing.

NOTICE:

Be careful of the direction of the gasket.

7. INSTALL SIDE PLATE

Align the holes of the plate and 2 straight pins.

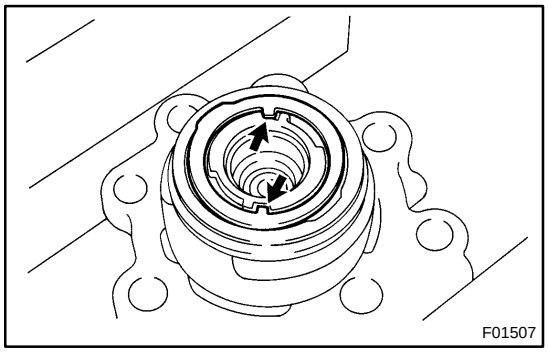

8. INSTALL WAVE WASHER

Install the washer so that its protrusions fit into the slots in the side plate.

9. INSTALL REAR HOUSING

(a) Coat 2 new O–rings with power steering fluid and install them to the rear housing.

(b) Install the rear housing with the 4 bolts.

Torque: 24 N·m (240 kgf·cm, 17 ft·lbf)

10. INSTALL SPRING, FLOW CONTROL VALVE AND PRESSURE PORT UNION

(a) Install the spring to the front housing.

(b) Install the flow control valve facing the correct direction (See page SR–41).

(c) Coat a new O–ring with power steering fluid and install it to the pressure port union.

(d) Install the pressure port union.
Torque: 83 N·m (850 kgf·cm, 61 ft·lbf)

11. INSTALL SUCTION PORT UNION

(a) Coat a new O–ring with power steering fluid and install it to the suction port union.

(b) Install the suction port union with the bolt.
Torque: 13 N·m (130 kgf·cm, 9 ft·lbf)

12. MEASURE PS VANE PUMP ROTATING TORQUE (See page SR–44)

SR0MI–07

INSTALLATION

1. INSTALL PS VANE PUMP ASSEMBLY

(a) Install the PS vane pump assembly with the stud bolt.
Torque: 22 N·m (220 kgf·cm, 16 ft·lbf)

(b) Install the 2 bolt and nut.
Torque: 44 N·m (450 kgf·cm, 33 ft·lbf)

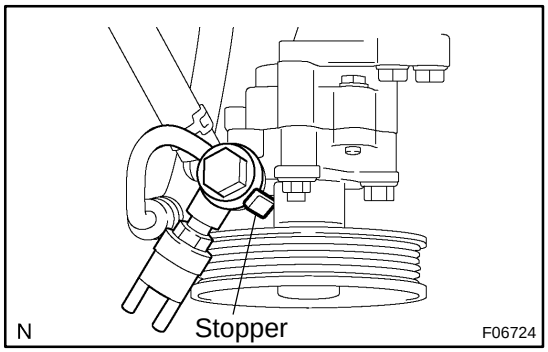

2. INSTALL PRESSURE FEED TUBE

(a) Connect the pressure feed tube.

(b) Install a new gasket and the union bolt to the pressure feed tube.

HINT:

Make sure the stopper of the pressure feed tube touches the PS vane pump body as shown in the illustration, then torque the union bolt.

Torque: 46.5 N·m (475 kgf·cm, 34 ft·lbf)

3. CONNECT RETURN HOSE

Connect the return hose with the clip.

4. CONNECT 2 VACUUM HOSES

Connect the 2 vacuum hoses and install the 2 clips.

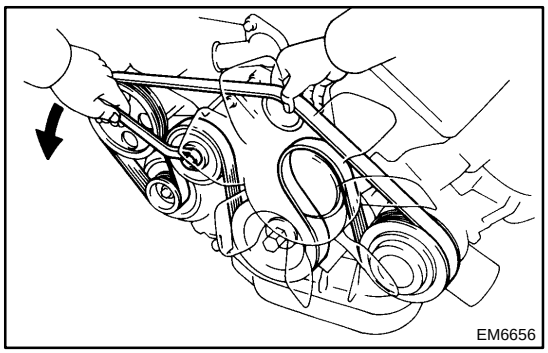

5. INSTALL DRIVE BELT

Loosen the drive belt tension by turning the drive belt tensioner counterclockwise, and install the belt.

6. INSTALL AIR CLEANER ASSEMBLY WITH AIR CLEANER HOSE

(a) Install the air cleaner assembly with air cleaner hose and the 3 bolts.

(b) Install the clamp.

(c) Connect the hoses.

(d) Connect the MAF meter connector.

7. BLEED POWER STEERING SYSTEM (See page SR–4)

POWER STEERING GEAR

COMPONENTS

SR02N–04

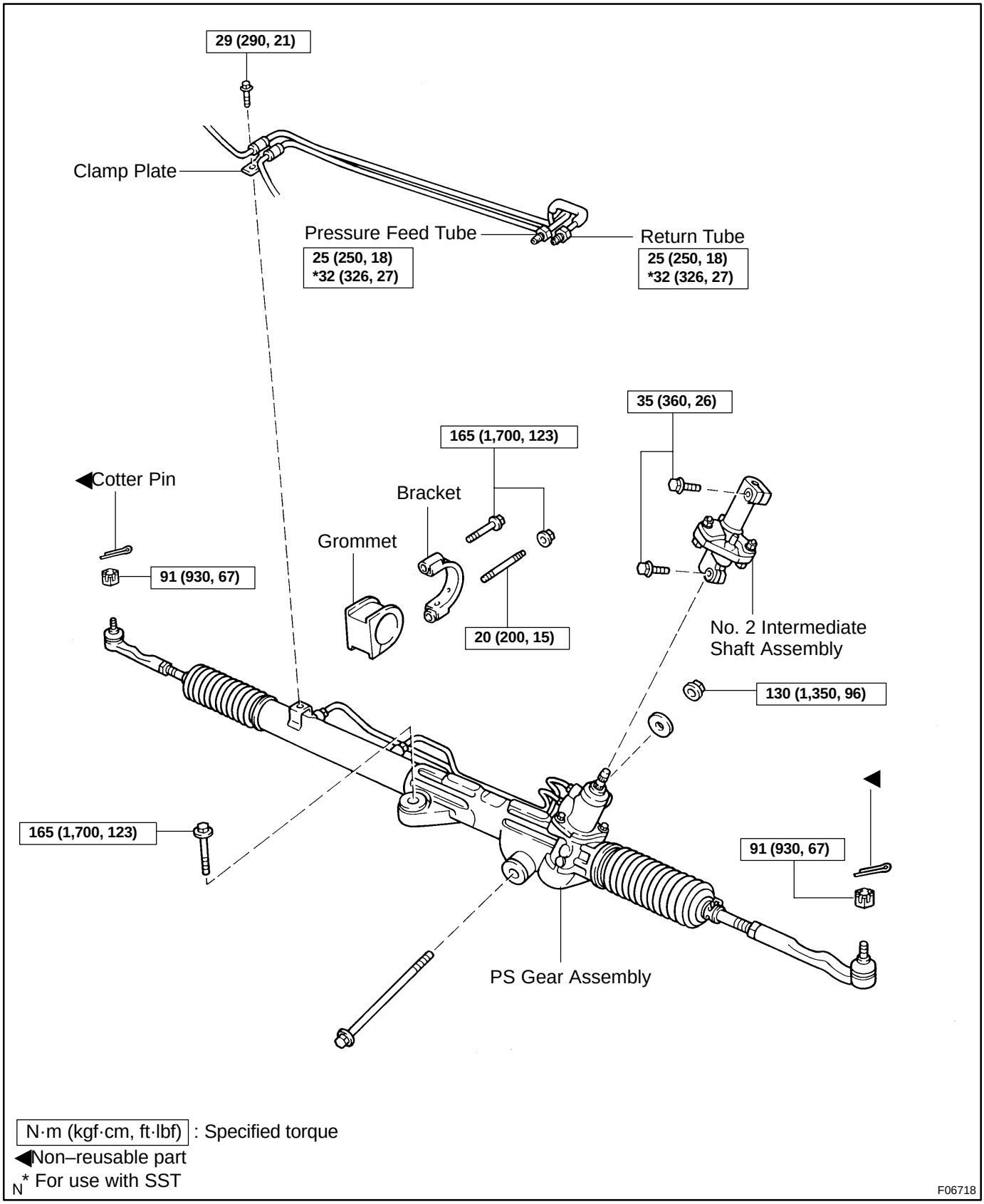

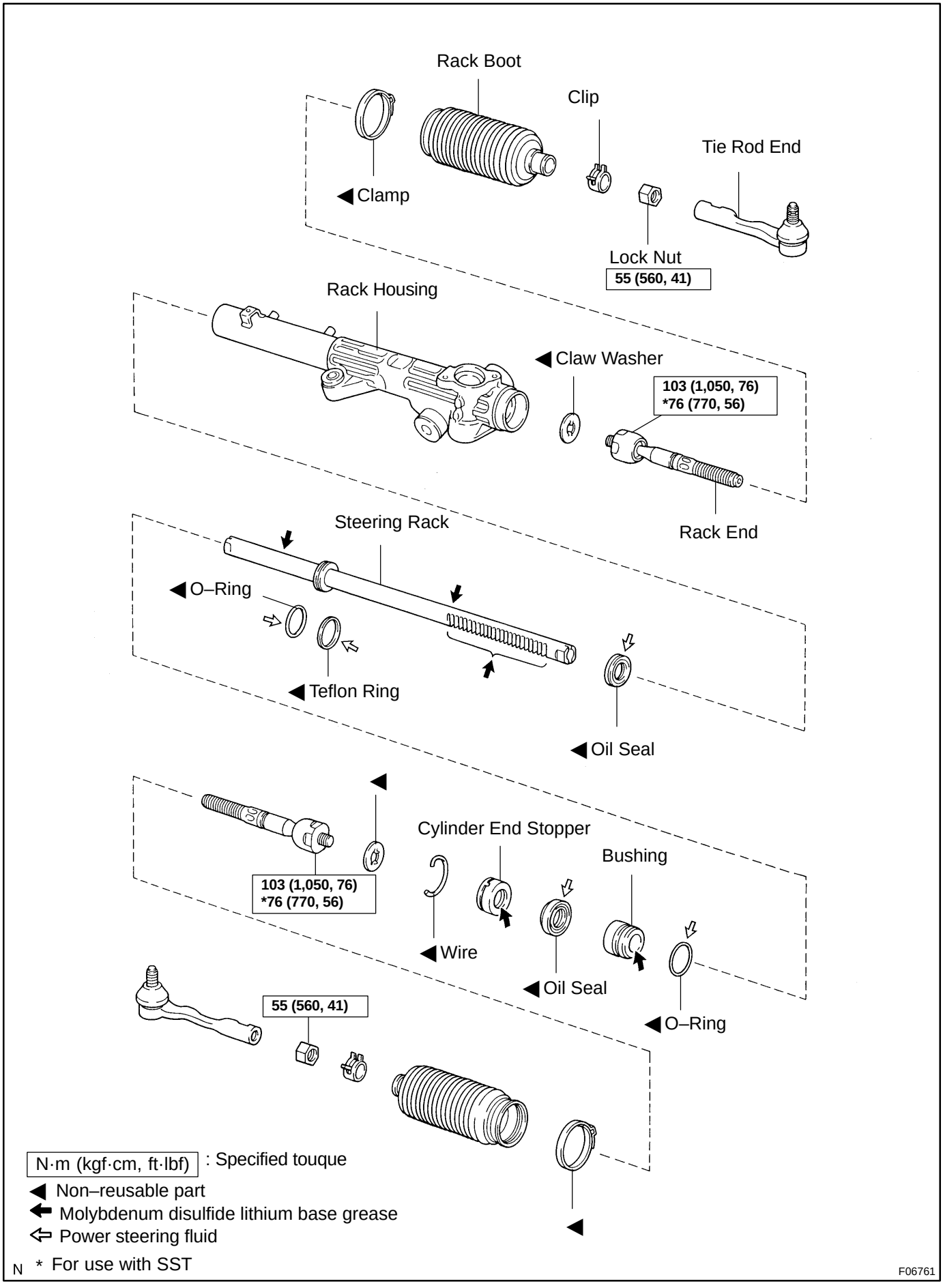
Rack Boot
Clip
Tie Rod End
◀ Clamp
Lock Nut
55 (560, 41)
Rack Housing
◀ Claw Washer
103 (1,050, 76)
*76 (770, 56)
Rack End
Steering Rack
◀ O–Ring
◀ Teflon Ring
◀ Oil Seal
103 (1,050, 76)
*76 (770, 56)
Cylinder End Stopper
Bushing
◀ Wire
◀ Oil Seal
◀ O–Ring
55 (560, 41)
◀
N·m (kgf·cm, ft·lbf) : Specified touque
◀ Non–reusable part
Molybdenum disulfide lithium base grease
Power steering fluid
N * For use with SST
F06761

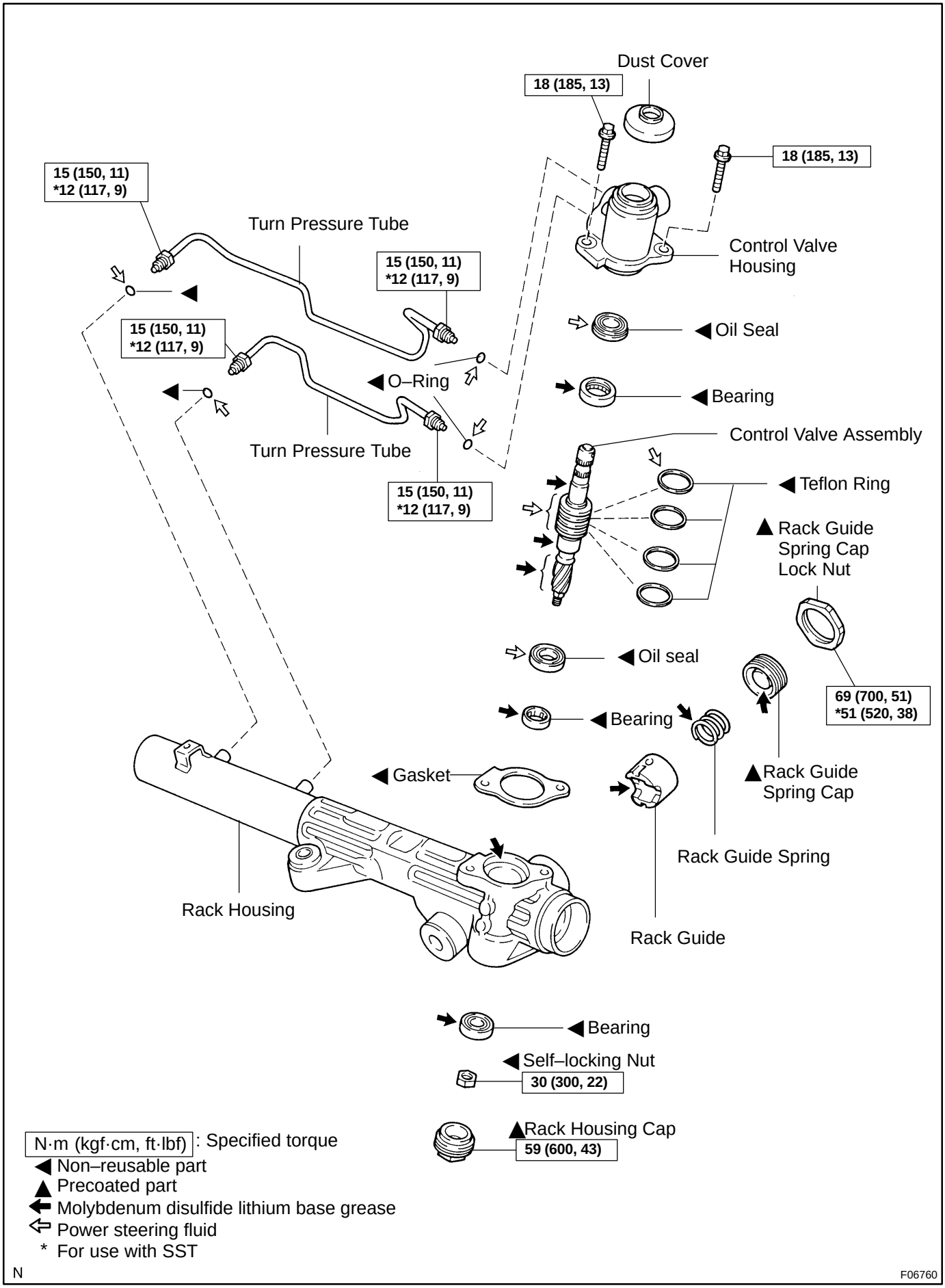
Dust Cover
18 (185, 13)
18 (185, 13)
15 (150, 11)
*12 (117, 9)
Turn Pressure Tube
Control Valve
Housing
15 (150, 11)
*12 (117, 9)
15 (150, 11)
*12 (117, 9)
Oil Seal
O–Ring
Bearing
Turn Pressure Tube
Control Valve Assembly
15 (150, 11)
*12 (117, 9)
Teflon Ring
Rack Guide
Spring Cap
Lock Nut
Oil seal
69 (700, 51)
*51 (520, 38)
Bearing
Rack Guide
Spring Cap
Gasket
Rack Guide Spring
Rack Housing
Rack Guide
Bearing
Self–locking Nut
30 (300, 22)
Rack Housing Cap
59 (600, 43)
N·m (kgf·cm, ft·lbf): Specified torque
Non–reusable part
Precoated part
Molybdenum disulfide lithium base grease
Power steering fluid
* For use with SST
N
F06760

SR02O–05

REMOVAL

1. PLACE FRONT WHEELS FACING STRAIGHT AHEAD

2. REMOVE STEERING WHEEL PAD (See page SR–18)

3. REMOVE STEERING WHEEL (See page SR–18)

4. DISCONNECT RH AND LH TIE ROD ENDS (See page SA–75)

5. DISCONNECT NO. 2 INTERMEDIATE SHAFT ASSEMBLY (See page SR–18)

6. DISCONNECT CLAMP PLATE

Remove the bolt and disconnect the clamp plate.

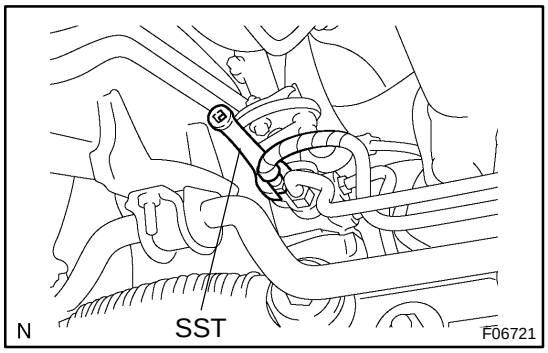

7. DISCONNECT PRESSURE FEED AND RETURN TUBES

Using SST, disconnect the tube.

SST 09023–12700

8. REMOVE PS GEAR ASSEMBLY

(a) Remove the bolt, nut and stud bolt from the bracket.

(b) Remove the 2 set bolts, nut, washer and PS gear assembly.

9. REMOVE BRACKET AND GROMMET

SR0V9–02

DISASSEMBLY

NOTICE:

When using a vise, do not overtighten it.

1. REMOVE 2 TURN PRESSURE TUBES

(a) Using SST, remove the 2 turn pressure tubes.
SST 09023–12700

(b) Remove the 4 O–rings from the tubes.

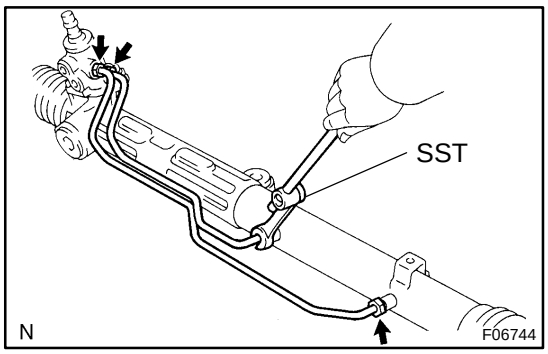

2. SECURE PS GEAR ASSEMBLY IN VISE

Using SST, 2 bolts and nuts, secure the gear assembly in a vise, as shown in the illustration.

SST 09612–00012

Reference:
Bolt: 90105–10346
Nut: 90170–10198

HINT:

Use 2 of the same type of SST.

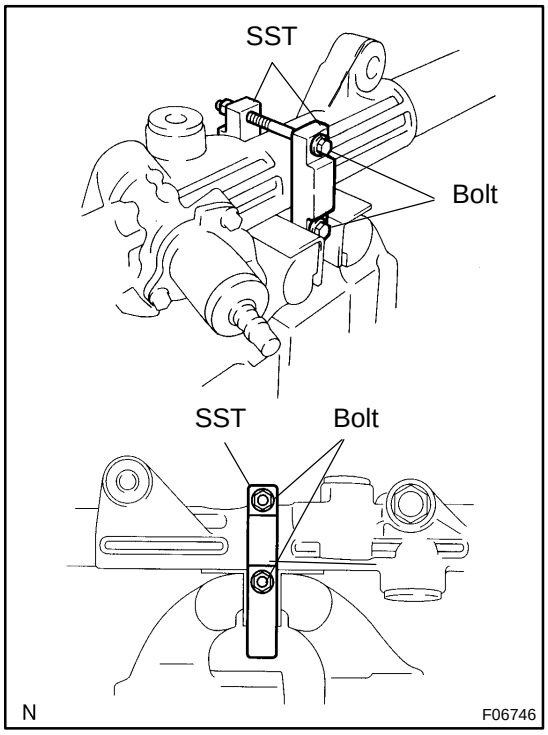

3. REMOVE RH AND LH TIE ROD ENDS AND LOCK NUTS

(a) Place matchmarks on the tie rod end, lock nut and rack end.

(b) Loosen the lock nut, remove the tie rod end and lock nut.

(c) Employ the same manner described above to the other side.

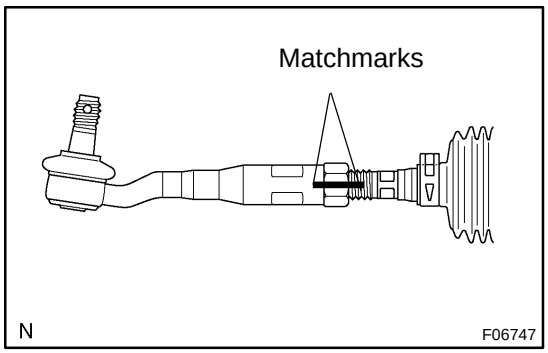

4. REMOVE RH AND LH CLIPS, RACK BOOTS AND CLAMPS

(a) Using a screwdriver, loosen the 2 clamps.

(b) Remove the 2 clips and boots.

HINT:

Mark the RH and LH boots.

NOTICE:

Be careful not to damage the boot.

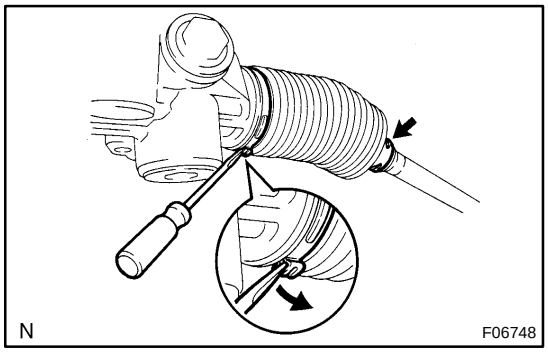

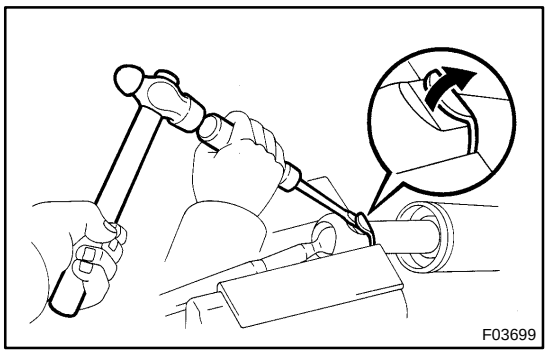

5. REMOVE RH AND LH RACK ENDS AND CLAW WASHERS

(a) Using a screwdriver and hammer, unstake the washer.

NOTICE:

Avoid any impact on the steering rack.

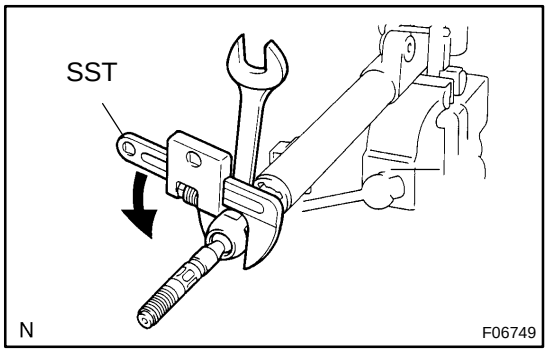

(b) Using a spanner to hold the steering rack steadily, and using SST, remove the rack end.

SST 09922–10010

HINT:

Mark the RH and LH rack ends.

NOTICE:

Use SST 09922–10010 in the direction shown in the illustration.

(c) Remove the washer from the rack end.

(d) Employ the same manner described above to the other side.

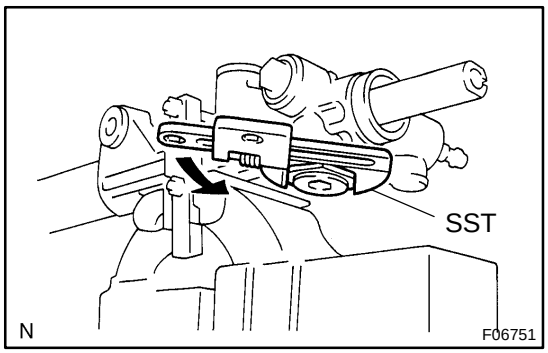

6. REMOVE RACK GUIDE SPRING CAP LOCK NUT

Using SST, remove the lock nut.

SST 09922–10010

NOTICE:

Use SST 09922–10010 in the direction shown in the illustration.

7. REMOVE RACK GUIDE SPRING CAP, RACK GUIDE SPRING AND RACK GUIDE

(a) Using a hexagon wrench, remove the rack guide spring cap.

(b) Remove the rack guide spring and rack guide.

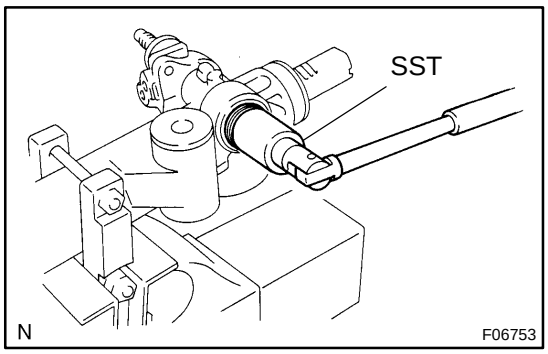

8. REMOVE RACK HOUSING CAP

Using SST, remove the rack housing cap.

SST 09816–30010

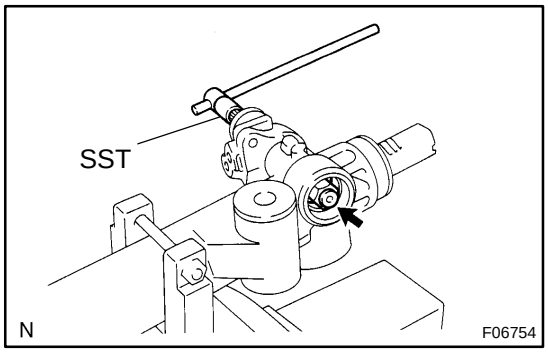

9. REMOVE SELF–SOCKING NUT

Using SST to stop the control valve shaft rotating, remove the nut.

SST 09616–00011

10. REMOVE DUST COVER

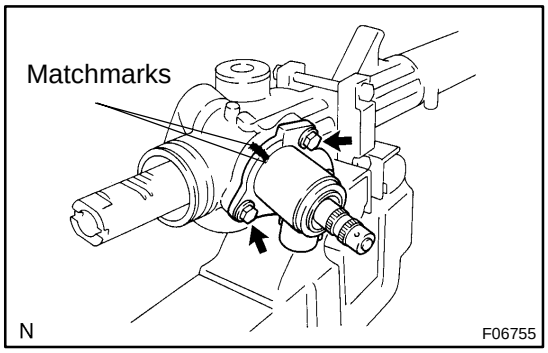

11. REMOVE CONTROL VALVE HOUSING WITH CONTROL VALVE ASSEMBLY

(a) Place matchmarks on the control valve housing and rack housing.

(b) Remove the 2 bolts and control valve housing with control valve assembly.

(c) Remove the gasket from the rack housing.

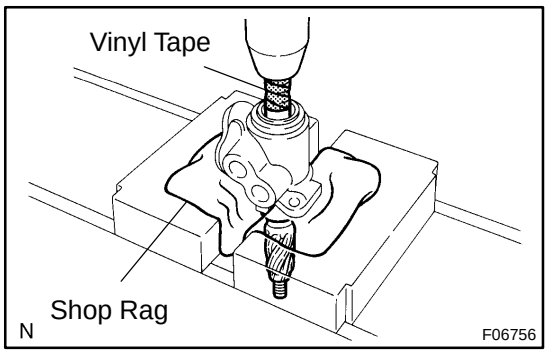

12. REMOVE CONTROL VALVE ASSEMBLY

(a) To prevent oil seal lip damage, wind vinyl tape on the serrated part of the valve shaft.

(b) Press out the valve assembly with the oil seal.

NOTICE:

- **Place a shop rag between the valve housing and the blocks.**
- **Be careful not to drop the valve assembly.**
- **Be careful not to damage the oil seal lip.**

13. REMOVE OIL SEAL

Remove the oil seal from the control valve assembly.

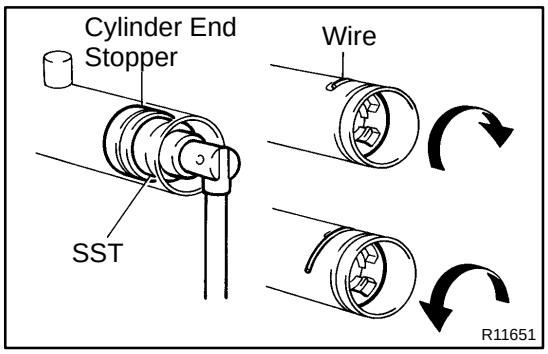

14. REMOVE CYLINDER END STOPPER

(a) Using SST, turn the stopper clockwise until the wire end is visible through the service hole.
SST 09631–16010

(b) Using SST, turn the stopper counterclockwise, and remove the wire.
SST 09631–16010

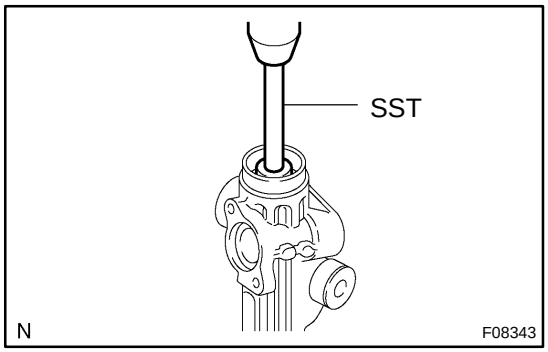

15. REMOVE STEERING RACK AND BUSHING

(a) Using SST, press out the steering rack with the bushing

NOTICE:

Take care not to drop the rack.

SST 09950–70010 (09951–07200)

(b) Remove the bushing from the rack.

(c) Remove the O–ring from the bushing.

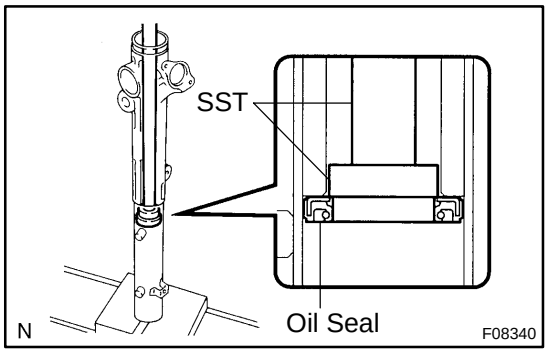

16. REMOVE OIL SEAL

Using SST, press out the oil seal.

SST 09950–60010 (09951–00360),
09950–70010 (09951–07360)

SR0VA–01

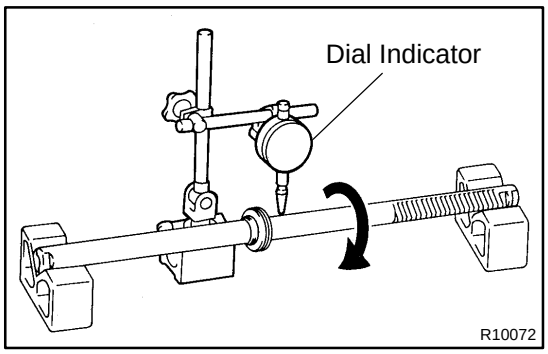

INSPECTION

INSPECT STEERING RACK

(a) Using a dial indicator, check the rack for runout, teeth wear and damage.

Maximum runout: 0.03 mm (0.0118 in.)

(b) Check the back surface for wear and damage.

SR0VB–01

REPLACEMENT

NOTICE:

When using a vise, do not overtighten it.

1. IF NECESSARY, REPLACE OIL SEAL AND BEARING

(a) Using SST, press out the oil seal and bearing from the control valve housing.

SST 09950–60010 (09951–00250), 09950–70010 (09951–07150)

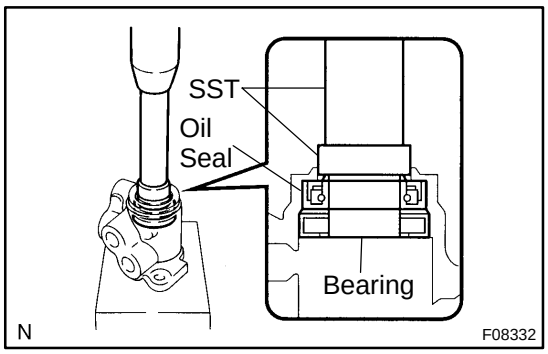

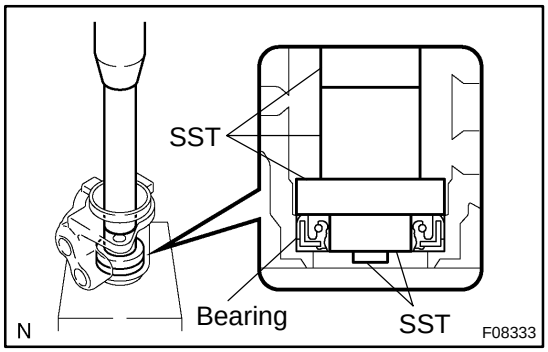

(b) Coat a new oil seal lip with power steering fluid.

(c) Using SST, press in the oil seal.

SST 09950–60010 (09951–00180, 09951–00320, 09952–06010), 09950–70010 (09951–07150)

NOTICE:

Make sure to install the oil seal facing in the correct direction.

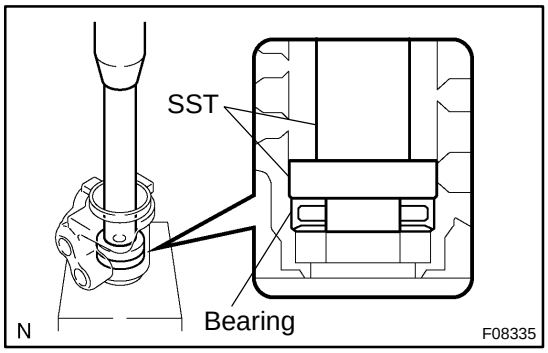

(d) Coat a new bearing with molybdenum disulfide lithium base grease.

(e) Using SST, press in the bearing.

SST 09950–60010 (09951–00340), 09950–70010 (09951–07150)

2. IF NECESSARY, REPLACE 2 BEARINGS

(a) Using SST, press out the bearing.

SST 09950–60010 (09951–00260), 09950–70010 (09951–07150)

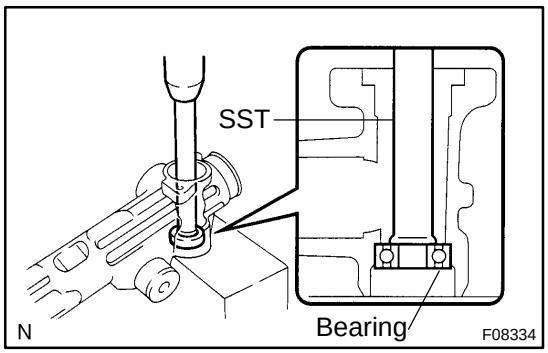

(b) Using SST, press out the bearing from the rack housing.

SST 09950–60010 (09951–00260), 09950–70010 (09951–07200)

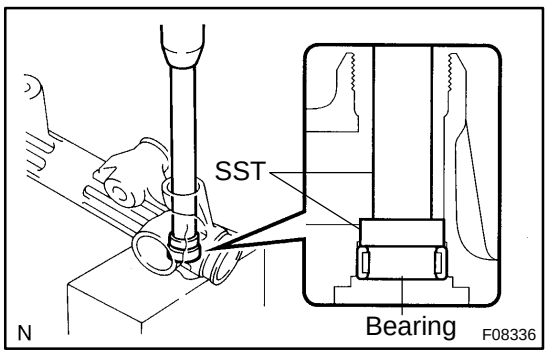

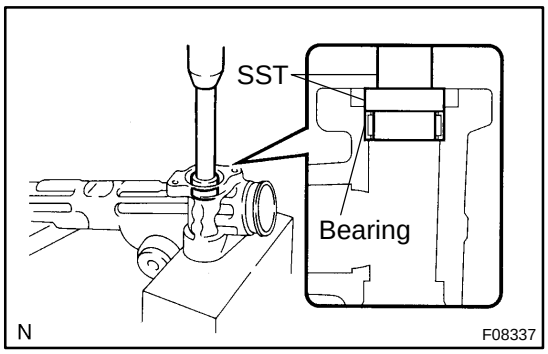

(c) Coat a new bearing with molybdenum disulfide lithium base grease.
(d) Using SST, press in the bearing.
SST 09950–60010 (09951–00310), 09950–70010 (09951–07150)

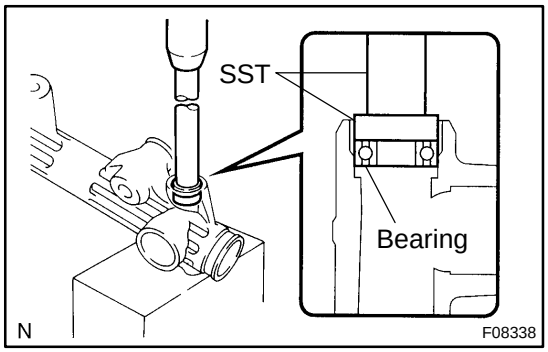

(e) Coat a new bearing with molybdenum disulfide lithium base grease.
(f) Using SST, press in the bearing.
SST 09950–60010 (09951–00320), 09950–70010 (09951–07150)

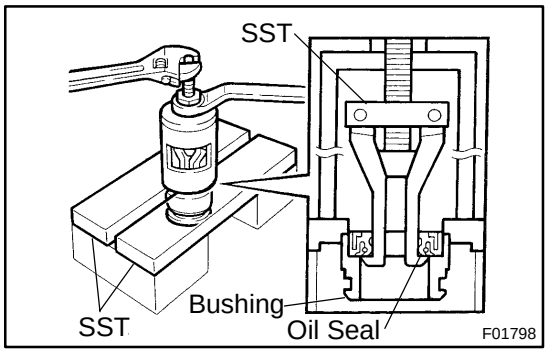

3. IF NECESSARY, REPLACE OIL SEAL

(a) Using SST, remove the oil seal from the bushing.
SST 09527–20011, 09612–24014 (09613–22011)

NOTICE:
Be careful not to damage the bushing.

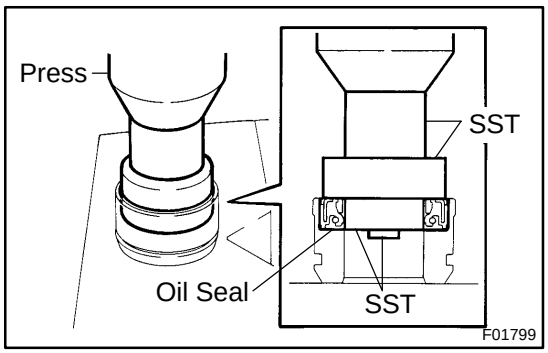

(b) Coat a new oil seal lip with power steering fluid.
(c) Using SST, press in the oil seal.
SST 09950–60010 (09951–00300, 09951–00460, 09952–06010)

NOTICE:
Make sure to install the oil seal facing in the correct direction.

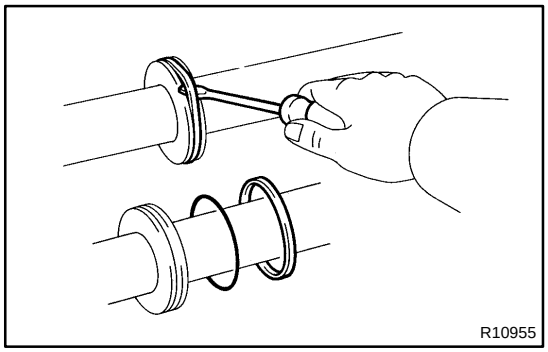

4. IF NECESSARY, REPLACE TEFLON RING AND O–RING

(a) Using a screwdriver, remove the teflon ring and O–ring from the steering rack.

NOTICE:
Be careful not to damage the groove for the teflon ring.

(b) Coat a new O–ring with power steering fluid and install it to steering rack.

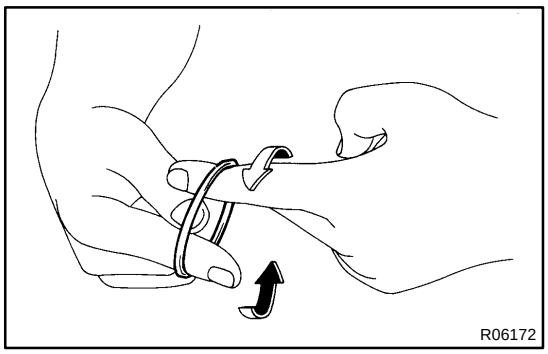

(c) Expand a new teflon ring with your fingers.

NOTICE:

Be careful not to over–expand the teflon ring.

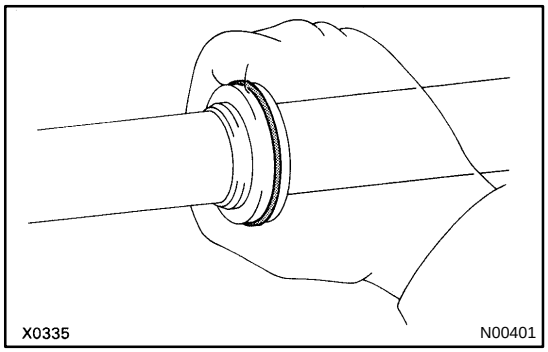

(d) Coat the teflon ring with power steering fluid.

(e) Install the teflon ring to the steering rack, and settle it down with your fingers.

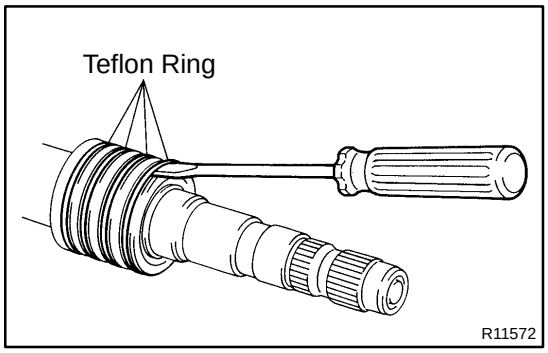

5. IF NECESSARY, REPLACE TEFLON RINGS

(a) Using a screwdriver, remove the 4 teflon rings from the control valve assembly.

NOTICE:

Be careful not to damage the grooves for the teflon ring.

(b) Expand 4 new teflon rings with your fingers.

NOTICE:

Be careful not to overexpand the teflon ring.

(c) Coat the teflon rings with power steering fluid.

(d) Install the teflon rings to the control valve assembly, and settle them down with your fingers.

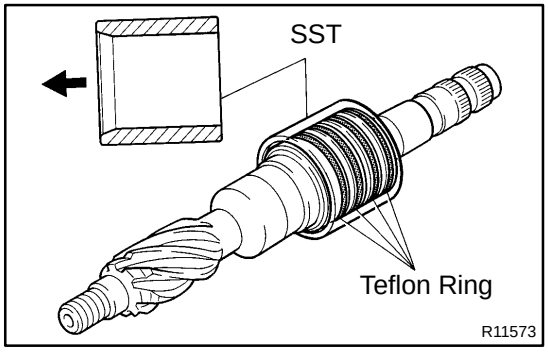

(e) Carefully slide the tapered end of SST over the teflon rings until they fit to the control valve assembly.
SST 09631–20081

NOTICE:

Be careful not to damage the teflon rings.

SR02R–04

REASSEMBLY

NOTICE:

When using a vise, do not overtighten it.

1. COAT PARTS INDICATED BY ARROWS WITH POWER STEERING FLUID OR MOLYBDENUM DISULFIDE LITHIUM BASE GREASE (See pages SR–52)

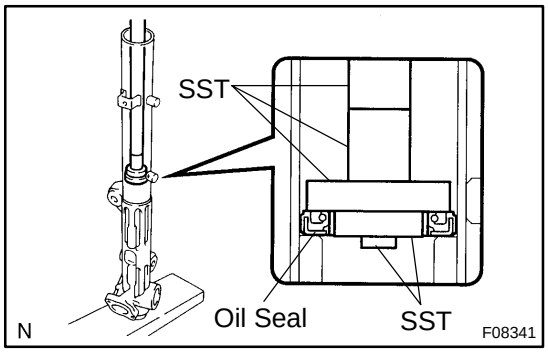

2. INSTALL OIL SEAL

(a) Coat a new oil seal lip with power steering fluid.

(b) Using SST, press in the oil seal.

SST 09950–60010 (09951–00330, 09951–00490, 09952–06010), 09950–70010 (09951–07360)

NOTICE:

- **Make sure to install the oil seal facing in the correct direction.**
- **Take care that the oil seal does not get reversed as you install it.**

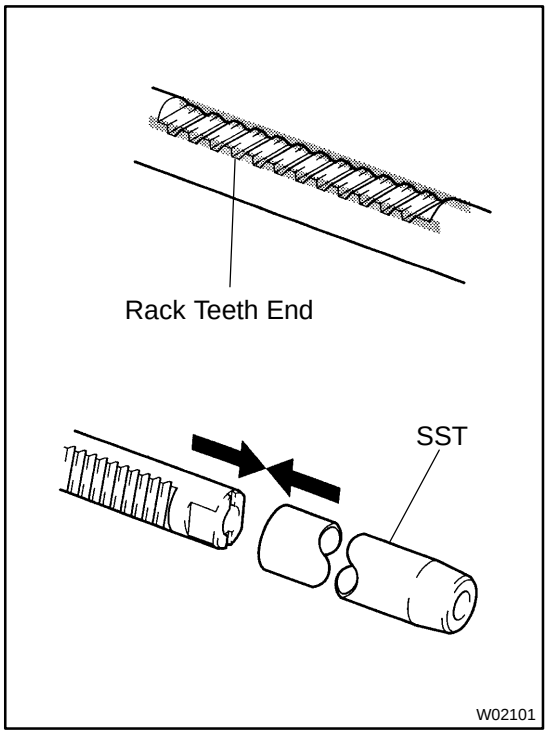

3. INSTALL STEERING RACK

(a) Install SST to the rack.

SST 09631–20051

HINT:

If necessary, scrape the burrs off the rack teeth end and burnish.

(b) Coat the SST with power steering fluid.

(c) Install the steering rack into the rack housing.

NOTICE:

Be careful not to damage the oil seal lip.

(d) Remove the SST.

SST 09631–20051

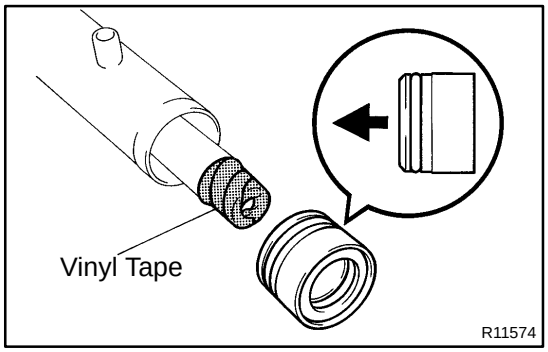

4. INSTALL BUSHING

(a) Coat a new O–ring with power steering fluid and install it to the bushing.

(b) To prevent oil seal lip damage, wind vinyl tape on the steering rack end, and apply power steering fluid.

(c) Install the bushing.

NOTICE:

- **Make sure to install the bushing facing in the correct direction.**
- **Be careful not to damage the oil seal lip.**

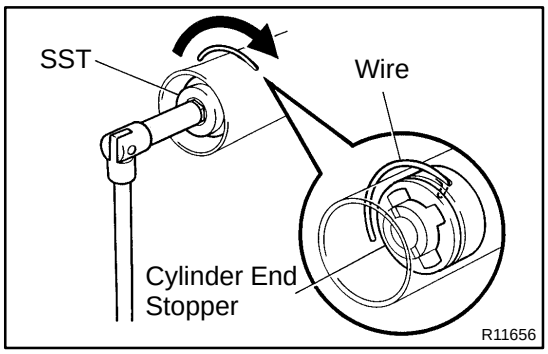

5. INSTALL CYLINDER END STOPPER

(a) Align the installation hole for the wire of the stopper with the slot of the rack housing.
(b) Install a new wire into the stopper.
(c) Using SST, turn the stopper clockwise 450 ± 50°.
SST 09631–16010

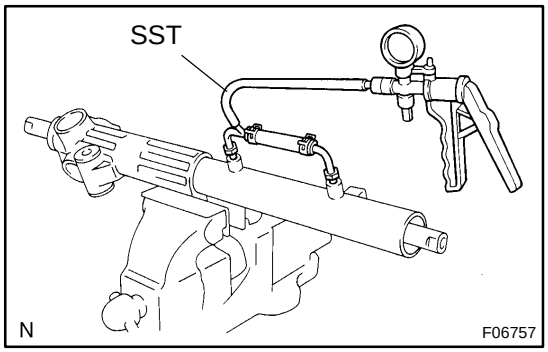

6. AIR TIGHTNESS TEST

(a) Install SST to the rack housing.
SST 09631–12071
(b) Apply 53 kPa (400 mmHg, 15.75 in.Hg) of vacuum for about 30 seconds.
(c) Check that there is no change in the vacuum.

If there is change in the vacuum, check the installation of the oil seals.

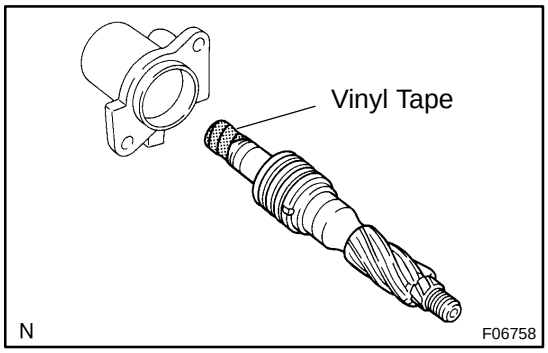

7. INSTALL CONTROL VALVE ASSEMBLY

(a) To prevent oil seal lip damage, wind vinyl tape on the serrated part of the valve shaft.
(b) Coat the teflon rings with power steering fluid.
(c) Install the valve assembly into the valve housing.

NOTICE:

Be careful not to damage the teflon rings and oil seal.

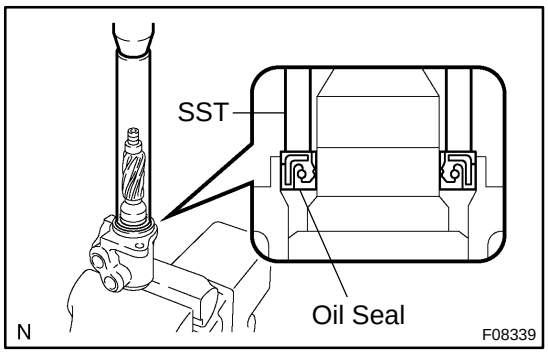

8. INSTALL OIL SEAL

(a) Coat a new oil seal lip with power steering fluid.
(b) Using SST, press in the oil seal.
SST 09612–22011

NOTICE:

Make sure to install the oil seal facing in the correct direction.

9. INSTALL CONTROL VALVE HOUSING WITH CONTROL VALVE ASSEMBLY

(a) Place a new gasket on the rack housing.
(b) Align the matchmarks on the control valve housing with control valve assembly and rack housing.
(c) Install the 2 bolts.
Torque: 18 N·m (185 kgf·cm, 13 ft·lbf)

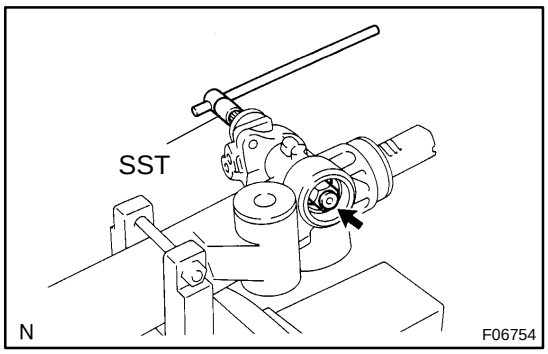

10. INSTALL SELF–LOCKING NUT

Using SST to stop the control valve shaft rotating, install a new nut.

SST 09616–00011

Torque: 30 N·m (300 kgf·cm, 22 ft·lbf)

11. INSTALL DUST COVER

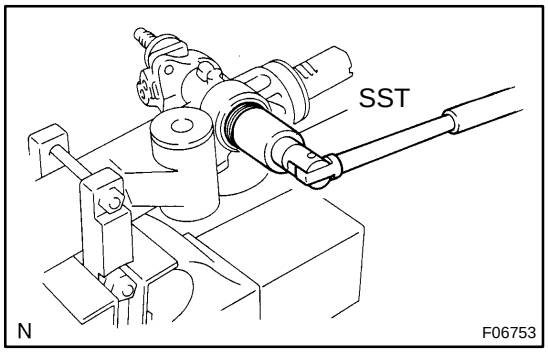

12. INSTALL RACK HOUSING CAP

(a) Apply sealant to 2 or 3 threads of the rack housing cap.

Sealant:
Part No.08833–00080, THREE BOND 1344, LOCTITE 242 or equivalent

(b) Using SST, install the rack housing cap.

SST 09816–30010

Torque: 59 N·m (600 kgf·cm, 43 ft·lbf)

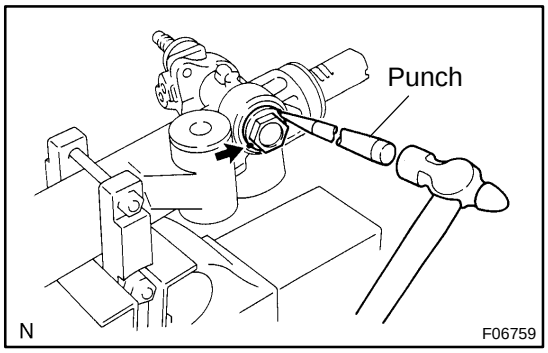

(c) Using a punch and hammer, stake the 2 parts of the cap.

13. INSTALL RACK GUIDE, RACK GUIDE SPRING AND RACK GUIDE SPRING CAP

(a) Install the rack guide and rack guide spring.

(b) Apply sealant to 2 or 3 threads of the rack guide spring cap.

Sealant:
Part No.08833–00080, THREE BOND 1344, LOCTITE 242 or equivalent

(c) Temporarily install the rack guide spring cap.

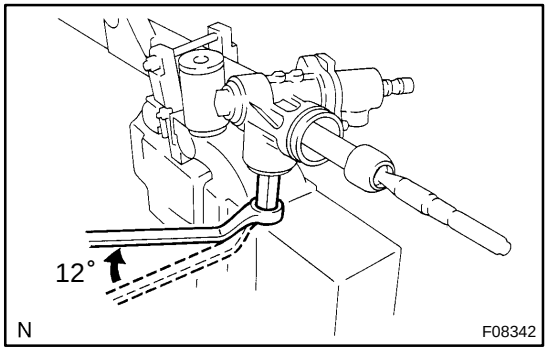

14. ADJUST TOTAL PRELOAD

(a) To prevent the steering rack teeth from damaging the oil seal lip, temporarily install the RH and LH rack ends.

(b) Using a hexagon wrench, install the rack guide spring cap.

Torque: 25 N·m (250 kgf·cm, 18 ft·lbf)

(c) Using a hexagon wrench, return the rack guide spring cap 12 °.

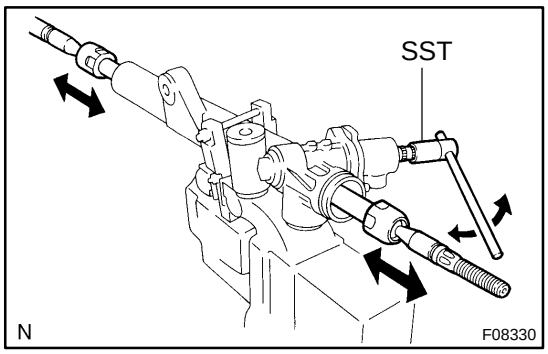

(d) Using SST, turn the control valve shaft right and left 1 or 2 times.
SST 09616–00011

(e) Using a hexagon wrench, loosen the rack guide spring cap until the rack guide spring is not functioning.

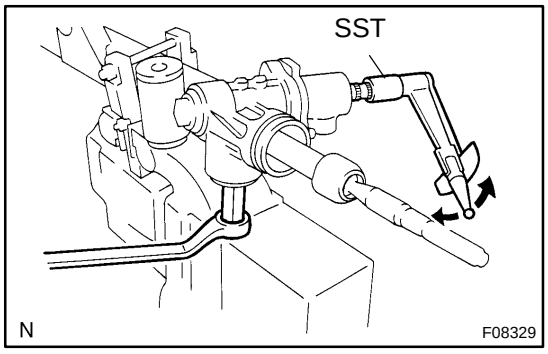

(f) Using SST, torque wrench and hexagon wrench, tighten the rack guide spring cap until the preload is within specification.
SST 09616–00011
Preload (turning):
1.0 – 1.45 N·m (10 – 14.5 kgf·cm, 8.7 – 12.6 in.·lbf)

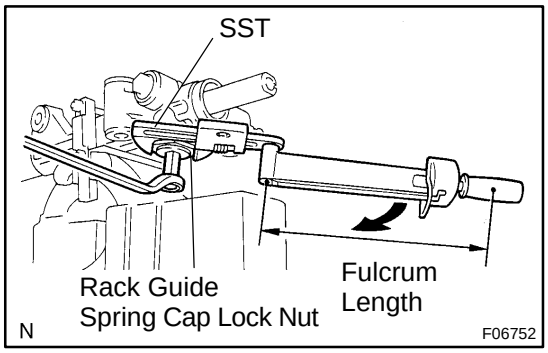

15. INSTALL RACK GUIDE SPRING CAP LOCK NUT

(a) Apply sealant to 2 or 3 threads of the lock nut.
Sealant:
Part No.08833–00080, THREE BOND 1344, LOCTITE 242 or equivalent

(b) Temporarily install the lock nut.

(c) Using a hexagon wrench to hold the rack guide spring cap, and using SST, torque the lock nut.
SST 09922–10010
Torque: 51 N·m (520 kgf·cm, 38 ft·lbf)

NOTICE:
Use SST 09922–10010 in the direction shown in the illustration.

HINT:
Use a torque wrench with a fulcrum length of 345 mm (13.58 in.).

(d) Recheck the total preload.
Preload (turning):
1.0 – 1.45 N·m (10 – 14.5 kgf·cm, 8.7 – 12.6 in.·lbf)

(e) Remove the RH and LH rack ends.

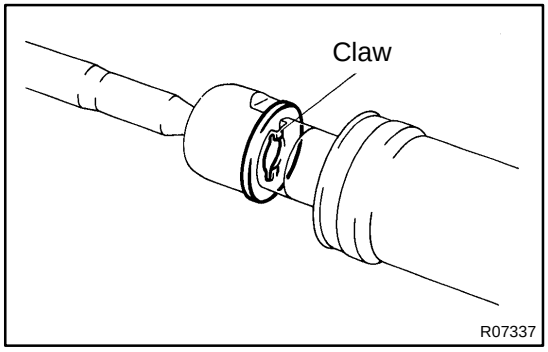

16. INSTALL RH AND LH CLAW WASHERS AND RACK ENDS

(a) Install a new claw washer, and temporarily install the rack end.

HINT:
Align the claws of the claw washer with the steering rack grooves.

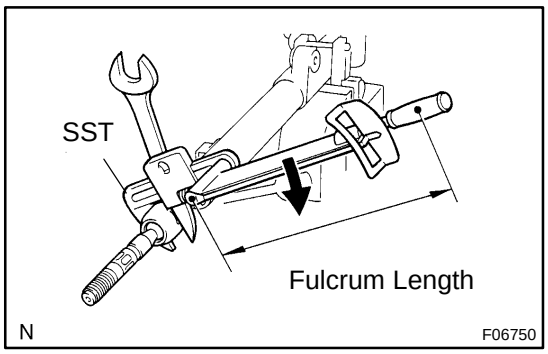

(b) Using a spanner to hold the steering rack steady, and using SST, torque the rack end.
SST 09922–10010
Torque: 76 N·m (770 kgf·cm, 56 ft·lbf)

NOTICE:
Use SST 09922–10010 in the direction shown in the illustration.

HINT:
Use a torque wrench with a fulcrum length of 345 mm (13.58 in.).

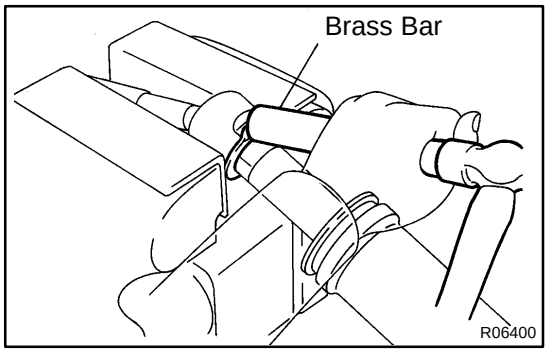

(c) Using a brass bar and hammer, stake the washer.

NOTICE:
Avoid any impact on the rack.

(d) Employ the same manner described above to the other side.

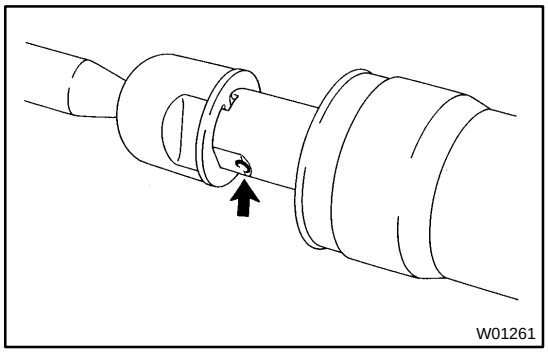

17. INSTALL RH AND LH RACK BOOTS, CLAMPS AND CLIPS

(a) Ensure that the steering rack hole is not clogged with grease.

HINT:
If the hole is clogged, the pressure inside the boot will change after it is assembled and the steering wheel is turned.

(b) Set a new clamp to the groove of the rack boot.

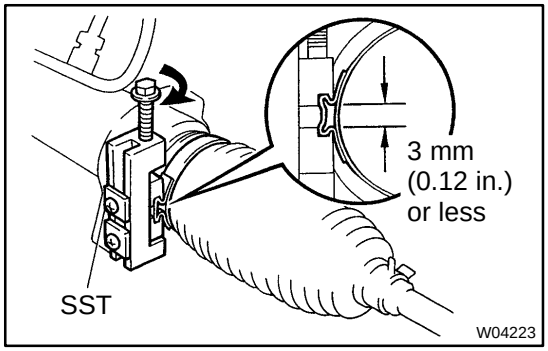

(c) Install the boot.

NOTICE:
Be careful not to damage or twist the boot.

(d) Using SST, tighten the clamp as shown in the illustration.
SST 09521–24010

(e) Install the clip to the rack boot.

(f) Employ the same manner describer above to the other side.

18. INSTALL RH AND LH TIE ROD ENDS AND LOCK NUTS

(a) Screw the lock nut and tie rod end onto the rack end until the matchmarks are aligned.

(b) After adjusting toe–in, torque the nut (See page SA–5).
Torque: 55 N·m (560 kgf·cm, 41 ft·lbf)

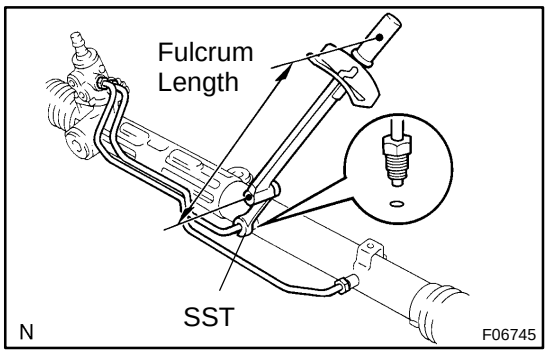

19. INSTALL 2 TURN PRESSURE TUBES

(a) Coat 4 new O–rings with power steering fluid and install them to the turn pressure tubes.

(b) Using SST, install the 2 turn pressure tubes.
SST 09023–12700
Torque: 12 N·m (117 kgf·cm, 9 ft·lbf)

HINT:

▲ Use a torque wrench with a fulcrum length of 250 mm (9.84 in.).

▲ This torque value is effective in case that SST is parallel to a torque wrench.

SR02S–04

INSTALLATION

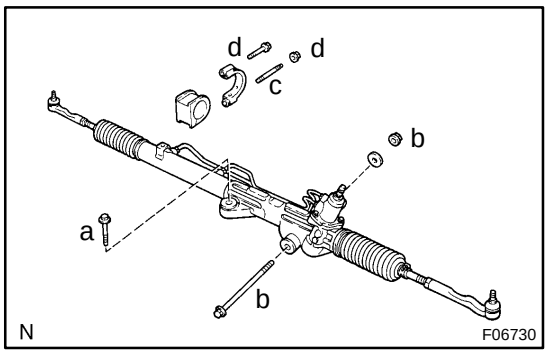

1. INSTALL GROMMET AND BRACKET

2. INSTALL PS GEAR ASSEMBLY

(a) Install the PS gear assembly with the gear assembly set bolt.
Torque: 165 N·m (1,700 kgf·cm, 123 ft·lbf)

(b) Install the gear assembly set bolt, washer and nut.
Torque: 130 N·m (1,350 kgf·cm, 96 ft·lbf)

(c) Install the stud bolt to the bracket.
Torque: 20 N·m (200 kgf·cm, 15 ft·lbf)

(d) Install the bolt and nut to the bracket.
Torque: 165 N·m (1,700 kgf·cm, 123 ft·lbf)

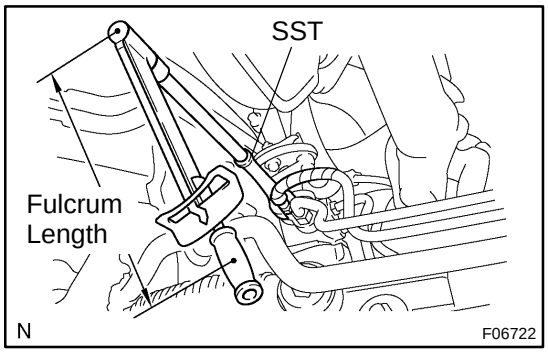

3. CONNECT PRESSURE FEED AND RETURN TUBES

Using SST, connect the tubes.
SST 09023–12700
Torque: 32 N·m (326 kgf·cm, 27 ft·lbf)

HINT:

▲ Use a torque wrench with a fulcrum length of 300 mm (11.81 in.).

▲ This torque value is effective in case that SST is parallel to a torque wrench.

4. CONNECT CLAMP PLATE

Connect the clamp plate and install the bolt.
Torque: 29 N·m (290 kgf·cm, 21 ft·lbf)

5. CONNECT NO. 2 INTERMEDIATE SHAFT ASSEMBLY (See page SR–28)

6. CONNECT RH AND LH TIE ROD ENDS (See page SA–75)

7. POSITION FRONT WHEEL FACING STRAIGHT AHEAD

HINT:
Do it with the front of the vehicle jacked up.

8. CENTER SPIRAL CABLE (See page SR–28)

9. INSTALL STEERING WHEEL

(a) Align the matchmarks on the wheel and steering column main shaft.

(b) Temporarily tighten the wheel set nut.

(c) Connect the connector.

10. BLEED POWER STEERING SYSTEM (See page SR–4)

11. CHECK STEERING WHEEL CENTER POINT

12. **TORQUE STEERING WHEEL SET NUT**
    Torque: 50 N·m (500 kgf·cm, 35 ft·lbf)
13. **INSTALL STEERING WHEEL PAD (See page SR–28)**
14. **CHECK FRONT WHEEL ALIGNMENT (See page SA–5)**

TROUBLESHOOTING

SA090–11

PROBLEM SYMPTOMS TABLE

Use the table below to help you find the cause of the problem. The numbers indicate the priority of the likely cause of the problem. Check each part in order. If necessary, replace these parts.

Symptom	Suspect Area	See page
Bottoming	1. Vehicle (Overloaded)	–
	2. Spring (Weak)	SA–53 SA–145
	3. Shock absorber (Worn)	SA–56 SA–141
Sways/pitches	1. Tire (Worn or improperly inflated)	SA–3
	2. Stabilizer bar (Bent or broken)	SA–79
	3. Shock absorber (Worn)	SA–56 SA–141
Front wheel shimmy	1. Tire (Worn or improperly inflated)	SA–3
	2. Wheel (Out of balance)	SA–3
	3. Shock absorber (Worn)	SA–56
	4. Wheel alignment (Incorrect)	SA–5
	5. Ball joints (Worn)	SA–72 SA–74 SA–77
	6. Hub bearing (Loose or worn)	–
	7. Steering linkage (Loose or worn)	–
	8. Steering gear (Out of adjustment or broken)	SR–52
Abnormal tire wear	1. Tire (Improperly inflated)	SA–3
	2. Wheel alignment (Incorrect)	SA–5
	3. Shock absorber (Worn)	SA–56 SA–141
	4. Suspension parts (Worn)	–
Noise in front differential	1. Oil level (Low or wrong grade)	SA–26
	2. Excessive backlash between pinion and ring gear	SA–28
	3. Ring, pinion or side gear (Worn or chipped)	SA–28
	4. Pinion shaft bearing (Worn)	SA–28
	5. Side bearing (Worn)	SA–28
	6. Differential bearing (Loose or worn)	SA–28
Oil leak from front differential	1. Oil level (Too high or wrong grade)	SA–26
	2. Front differential rear oil seal (Worn or damaged)	SA–26
	3. Side gear oil seal (Worn or damaged)	SA–28
	4. Companion flange (Loose or damaged)	SA–28
	5. Side gear shaft (Damaged)	SA–28
Noise in rear axle	1. Oil level (Low or wrong grade)	SA–92
	2. Excessive backlash between pinion and ring gear	SA–95
	3. Ring, pinion or side gear (Worn or chipped)	SA–95
	4. Pinion shaft bearing (Worn)	SA–95
	5. Axle shaft bearing (Worn)	SA–83
	6. Differential bearing (Loose or worn)	SA–95
Oil leak from rear axle	1. Oil seal (Worn or damaged)	SA–83
	2. Rear axle housing (Cracked)	–
Oil leak from rear differential	1. Oil level (Too high or wrong grade)	SA–92
	2. Oil seal (Worn or damaged)	SA–92
	3. Companion flange (Loose or damaged)	SA–95

SA28L–01

REPAIR PROCEDURES

HINT:

This is a flow chart for vehicle pull.

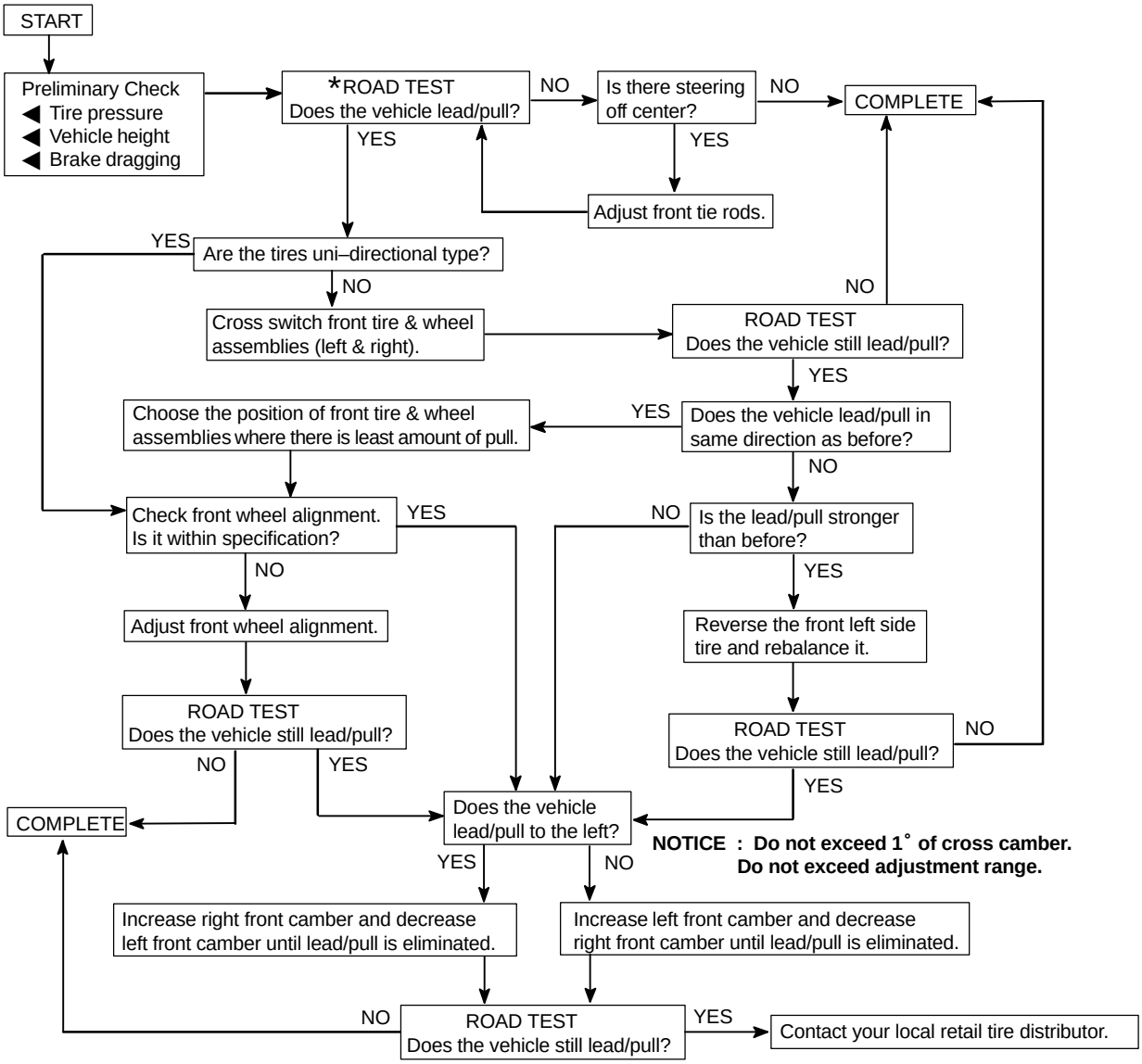

* Select a flat road where the vehicle can be driven in a straight line for 100 meters at a constant speed of 35mph. Please confirm safety and set the steering wheel to its straight position. Drive the vehicle in a straight line for 100 meters at a constant speed of 35mph without holding the steering wheel.

(1) The vehicle can keep straight but the steering wheel has some angle.
→ STEERING OFF CENTER (See page SR–10)

(2) The vehicle cannot keep straight.
→ STEERING PULL

TIRE AND WHEEL

SA1KL–03

INSPECTION

1. INSPECT TIRE

(a) Check the tires for wear and proper inflation pressure.

Cold tire inflation pressure:

Tire size	Front kPa (kgf/cm^2, psi)	Rear kPa (kgf/cm^2, psi)
P245/70R16	180 (1.8, 26)	240 (2.4, 35)
P265/70R16	180 (1.8, 26)	200 (2.0, 29)
P265/65R17	200 (2.0, 29)	220 (2.2, 32)

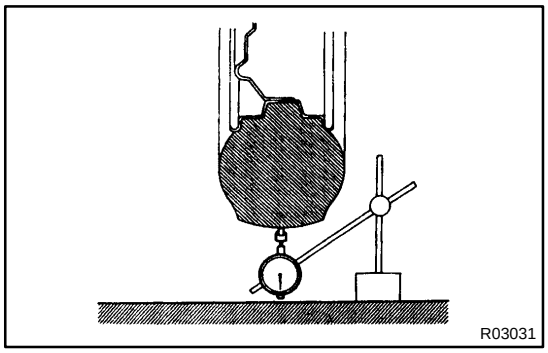

(b) Using a dial indicator, check the tire runout.
Tire runout: 3.0 mm (0.118 in.) or less

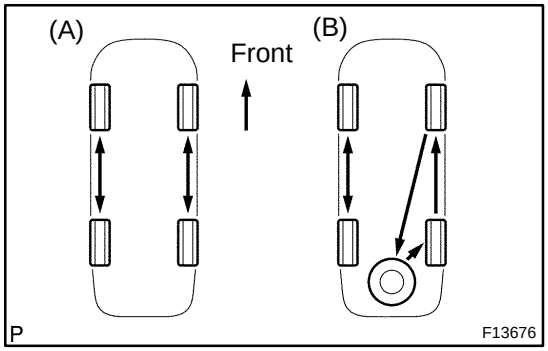

2. ROTATING TIRE

HINT:

- ▲ Rotate tires as shown in the illustration.
- ▲ Rotate as shown in (B) if the spare tire is included in the rotation.

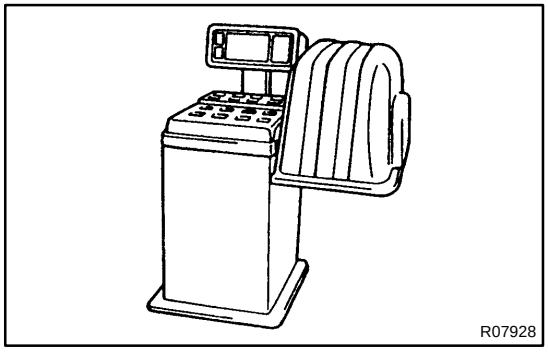

3. INSPECT WHEEL BALANCE

(a) Check and adjust the Off–the–car balance.

(b) If necessary, check and adjust the On–the–car balance.
Imbalance after adjustment: 14.0 g (0.031 lb) or less

4. CHECK FRONT SUSPENSION FOR LOOSENESS

5. CHECK STEERING LINKAGE FOR LOOSENESS

6. CHECK BALL JOINT FOR LOOSENESS

7. CHECK SHOCK ABSORBER WORKS PROPERLY

▲ Check if oil leaks

▲ Check the mounting bushings for wear

▲ Bounce front and rear of the vehicle

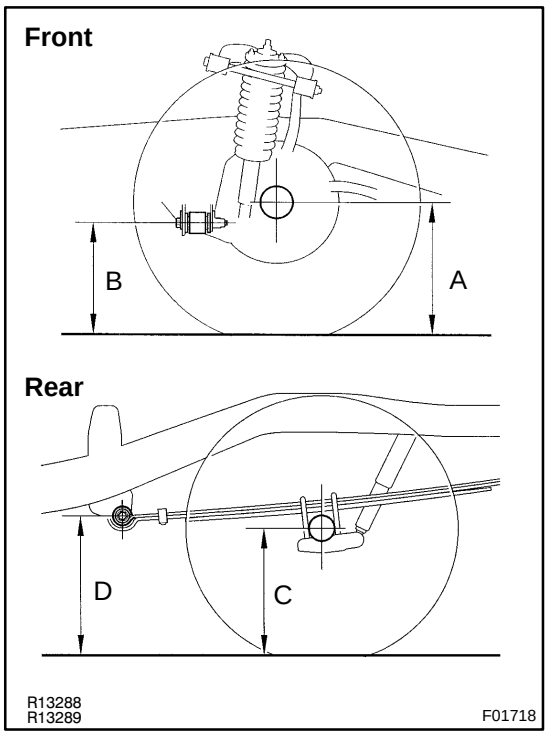

FRONT WHEEL ALIGNMENT

SA1FZ–05

INSPECTION

1. MEASURE VEHICLE HEIGHT (See page SS–59)

Measuring points:

A: Ground clearance of the front drive shaft center

B: Ground clearance of the front adjusting cam bolt center

C: Ground clearance of the rear axle shaft center

D: Ground clearance of the leaf spring front side bushing center

Vehicle height:

Front: A – B

Rear: C – D

NOTICE:

Before inspecting the wheel alignment, adjust the vehicle height to the specified value.

If the vehicle height is not the specified value, try to adjust it by pushing down on or lifting the body.

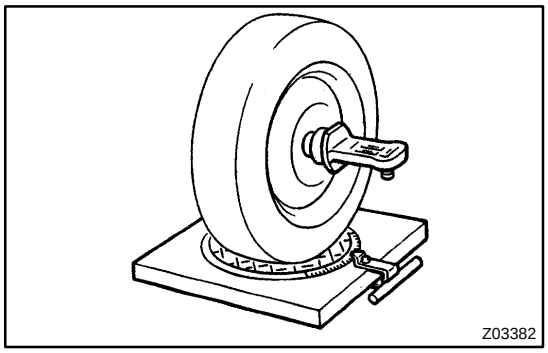

2. INSTALL CAMBER–CASTER–KINGPIN GAUGE OR POSITION VEHICLE ON WHEEL ALIGNMENT TESTER

Follow the specific instructions of the equipment manufacturer.

3. INSPECT CAMBER, CASTER AND STEERING AXIS INCLINATION (See page SS–59)

If the steering axis inclination is not within the specified value, after the camber and caster have been correctly adjusted, recheck the steering knuckle and front wheel for bearing or looseness.

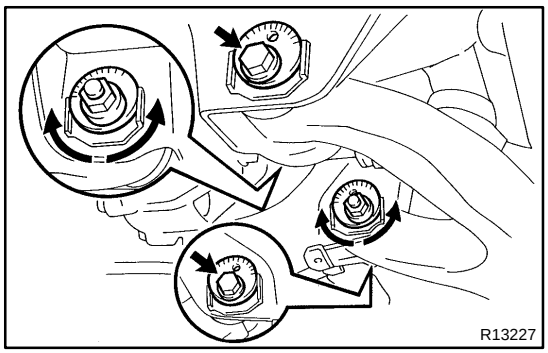

4. ADJUST CAMBER AND CASTER

(a) Loosen the front and/or rear adjusting cam set bolts.

(b) Adjust the camber and caster by front and/or rear adjusting cams (See adjustment chart).

HINT:

Try to adjust the camber and caster to the center of the specified values.

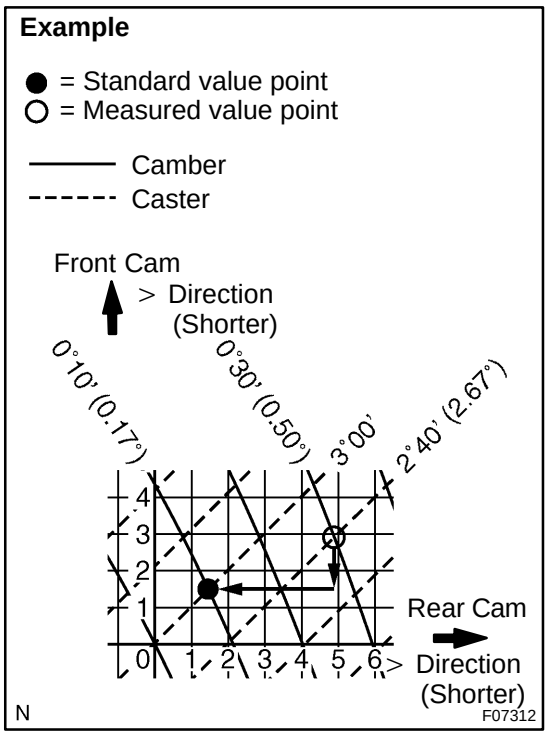

(c) How to read adjustment chart (Example).

(1) Find the applicable wheel alignment standard value for the particular model.

(2) Mark the selected standard value on the adjustment chart.

Example:

Camber: 0˚10' (0.17˚)

Caster: 3˚00'

(3) Measure the present wheel alignment value with the vehicle in non–loaded condition.

(4) Mark the measured present value on the adjustment chart.

Example:

Camber: 0˚30' (0.50˚)

Caster: 2˚40' (2.67˚)

(5) As shown in the example chart, read the distance from the measured value to the standard value, and adjust the front and/or rear adjusting cams accordingly.

Amount to turn adjusting cams (by graduation):

Example:

Front cam: 1.3 < Direction

Rear cam: 3.3 < Direction

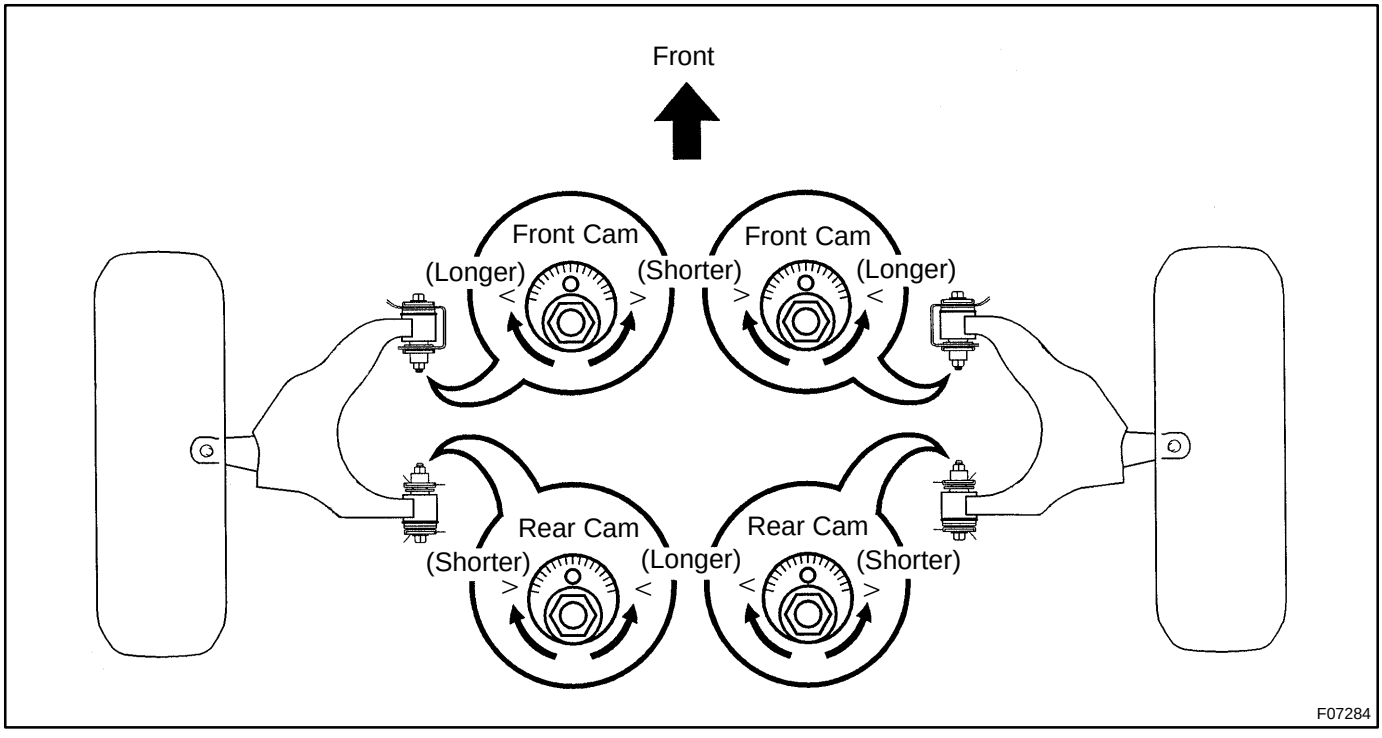

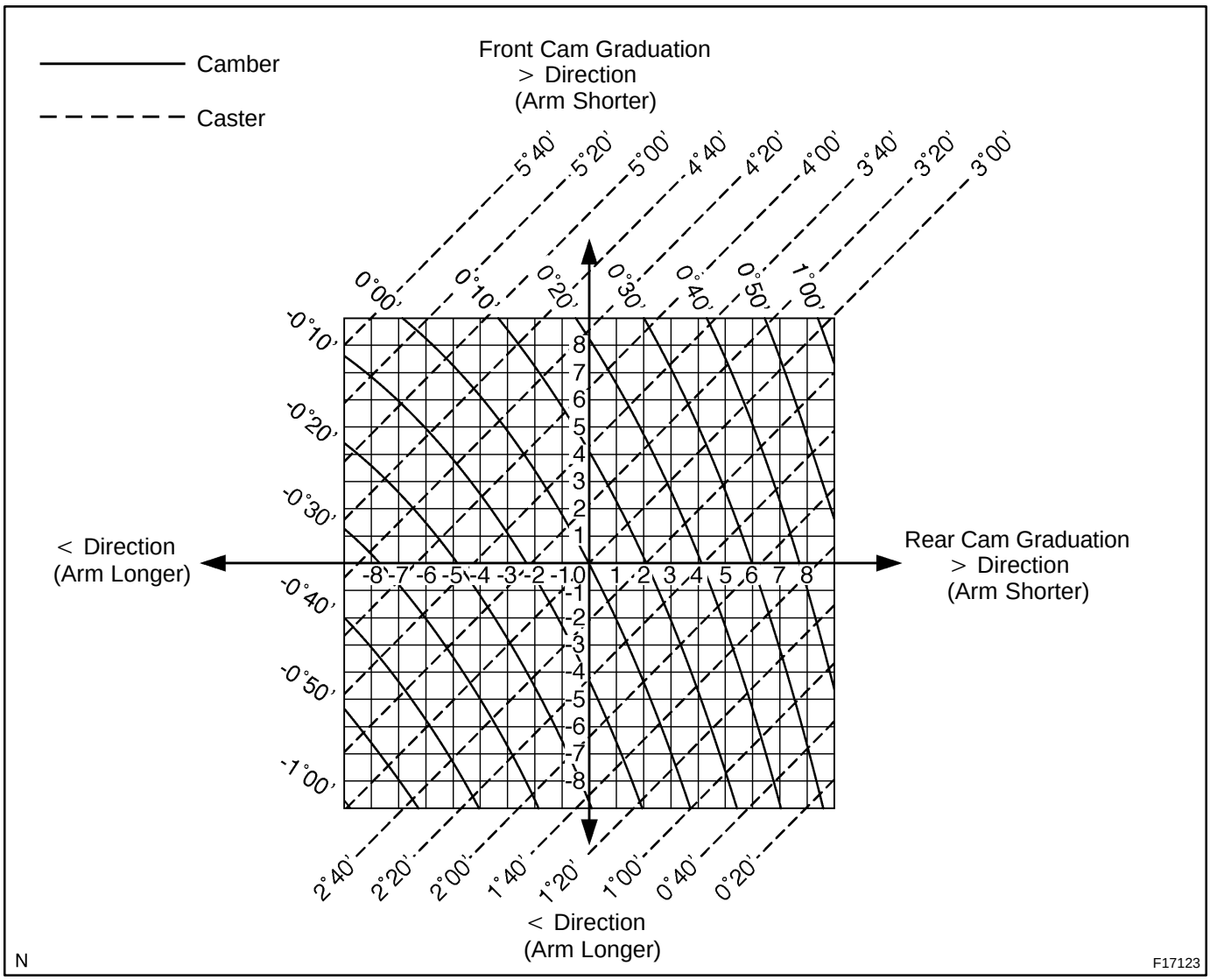

(d) Torque the front and/or rear adjusting cam set bolts.
Torque: 130 N·m (1,325 kgf·cm, 96 ft·lbf)

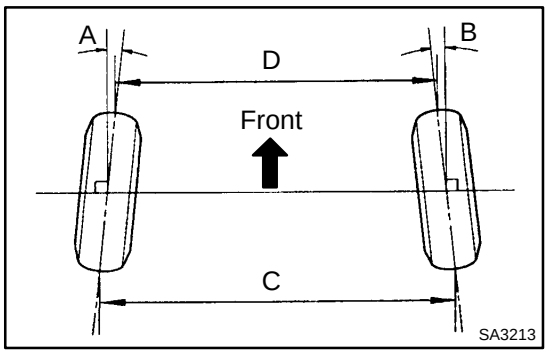

5. INSPECT TOE–IN (See page SS–59)

If the toe–in is not within the specified value, adjust the rack ends.

6. ADJUST TOE–IN AND WHEEL ANGLE

(a) Remove the 2 clips.

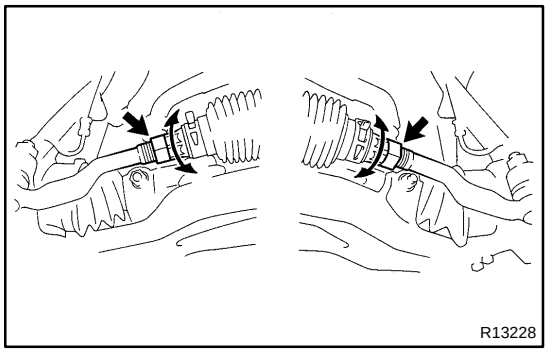

(b) Loosen the tie rod end lock nuts.

(c) Turn the right and left rack ends by an equal amount to adjust the toe–in.

HINT:

Try to adjust the toe–in to the center of the specified value.

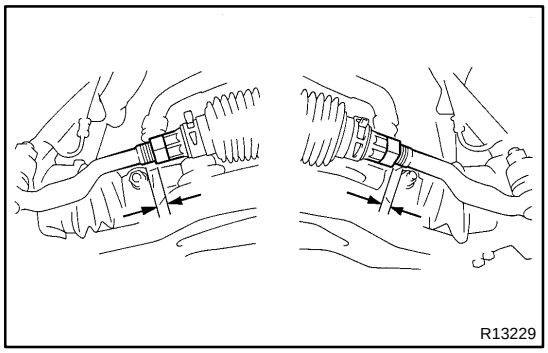

(d) Make sure that the lengths of the right and left rack ends are the same.

Rack end length difference: 1.5 mm (0.059 in.) or less

(e) Tighten the tie rod end lock nuts.

Torque: 55 N·m (560 kgf·cm, 41 ft·lbf)

(f) Place the boots on the seats and install the clips.

HINT:

Make sure that the boots are not twisted.

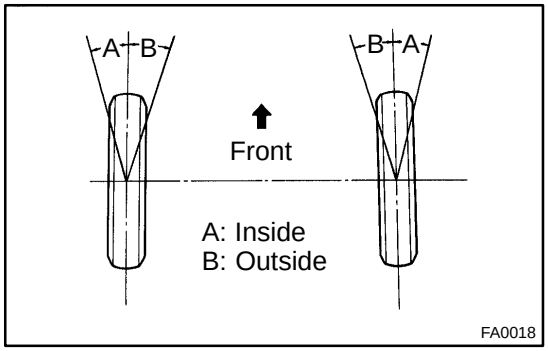

(g) Inspect the wheel angle See page (SS–59).

Turn the steering wheel fully and measure the turning angle.

Wheel turning angle:

If the right and left wheel turning angles differ from the specified value, readjust the toe–in and wheel angle within the specified value. At this time, make sure that the lengths of the right and left rack ends are the same.

Rack end length difference: 1.5 mm (0.059 in.) or less

FRONT AXLE HUB

COMPONENTS

SA1JY–02

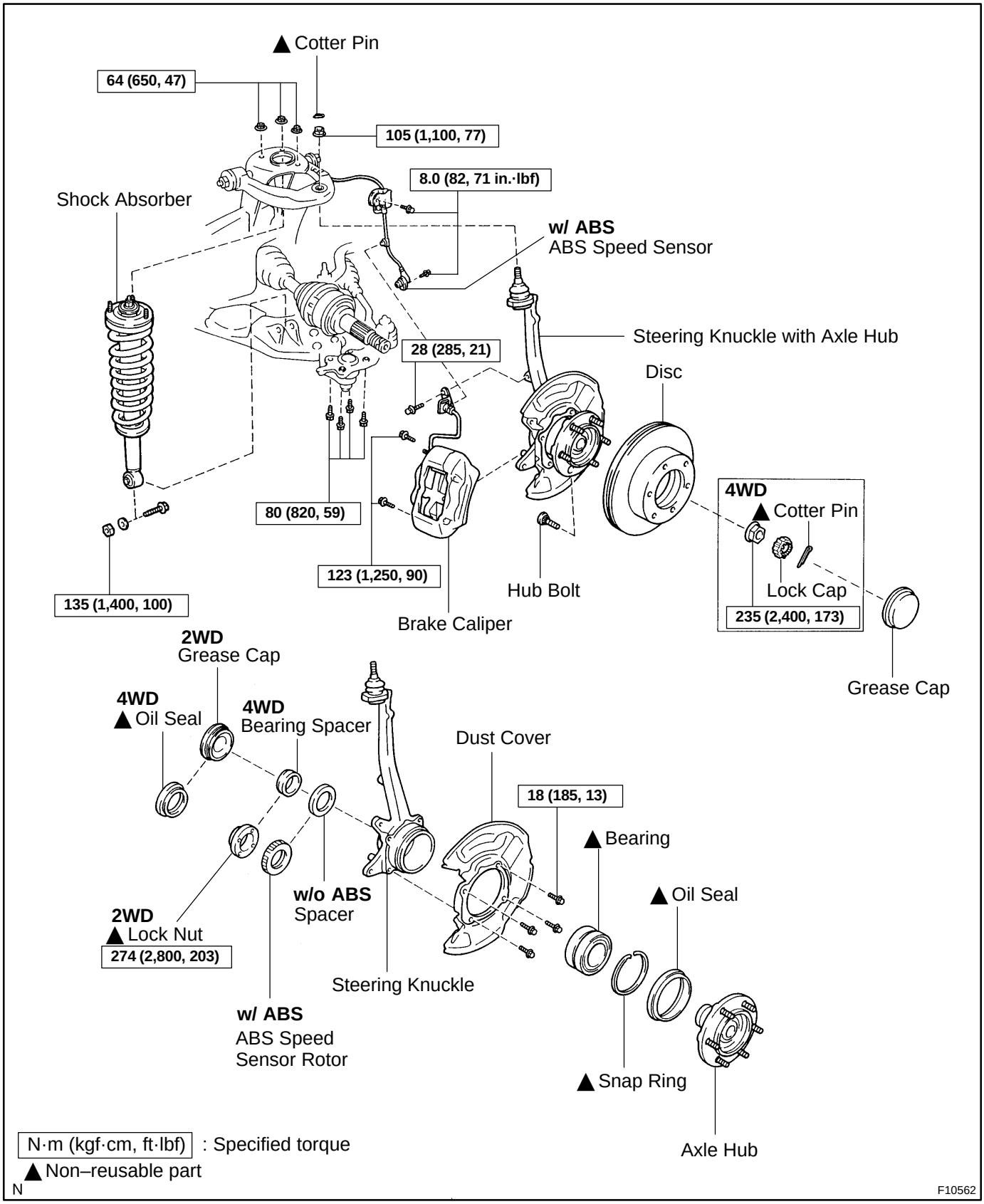

SA1JZ–01

REMOVAL

1. REMOVE FRONT WHEEL

2. REMOVE GREASE CAP

Using a screwdriver and hammer, remove the grease cap.

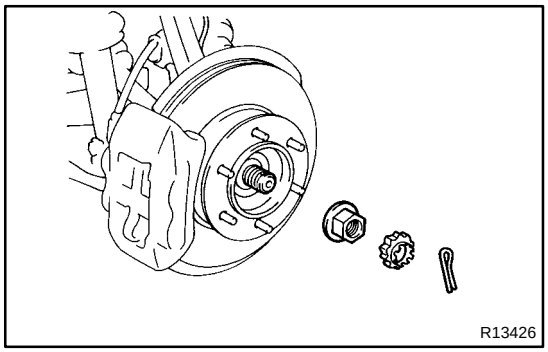

3. 4WD:
DISCONNECT DRIVE SHAFT

(a) Remove the cotter pin and lock cap.

(b) While applying the brakes, remove the lock nut.

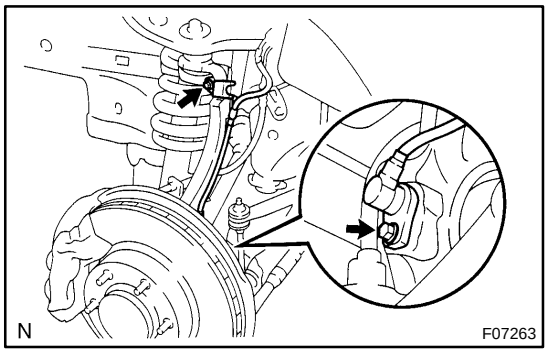

4. w/ ABS:
DISCONNECT ABS SPEED SENSOR AND WIRE HARNESS CLAMP FROM STEERING KNUCKLE

Remove the 2 bolts and disconnect the ABS speed sensor and wire harness clamp from the steering knuckle.

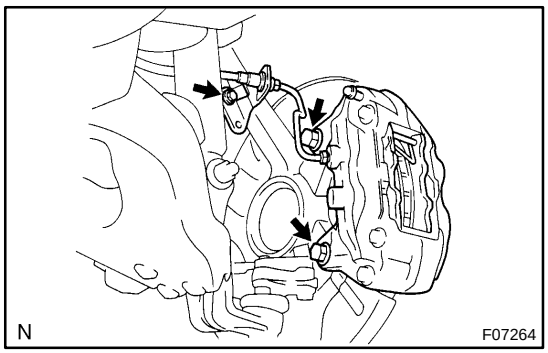

5. REMOVE BRAKE CALIPER AND DISC

(a) Remove the bolt and brake line clamp from the steering knuckle.

(b) Remove the 2 bolts, brake caliper and disc.

NOTICE:

Do not damage the brake tube.

(c) Support the brake caliper securely.

6. REMOVE SHOCK ABSORBER (See page SA–54)

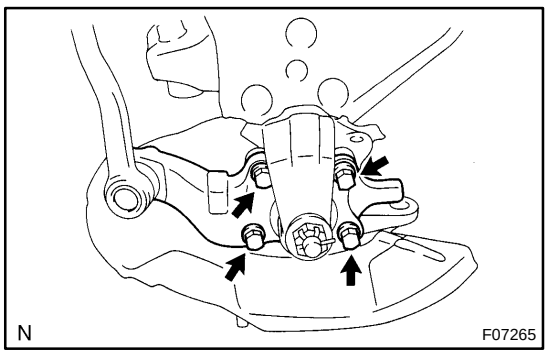

7. DISCONNECT LOWER BALL JOINT

Remove the 4 bolts and disconnect the lower ball joint.

8. REMOVE STEERING KNUCKLE

(a) Remove the cotter pin and loosen the nut.

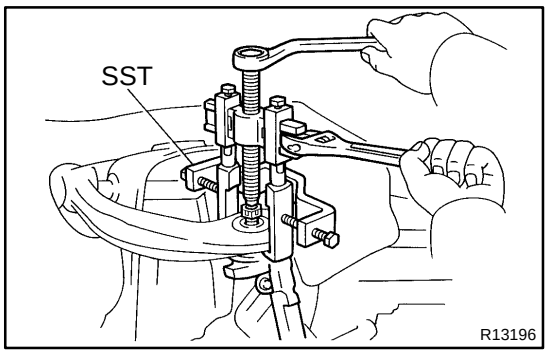

(b) Using SST, disconnect the steering knuckle.
SST 09950–40011 (09951–04010, 09952–04010, 09553–04020, 09554–04010, 09955–04031, 09958–04011)

(c) Remove the nut and steering knuckle.

NOTICE:

4WD:

Be careful not to damage the oil seal and drive shaft boot.

HINT:

4WD:

When it is difficult to disconnect the drive shaft, tap the tip of the drive shaft with a plastic hammer.

SA1K0–01

DISASSEMBLY

1. 2WD:

REMOVE GREASE CAP

(a) Mount the axle hub in a soft jaw vise.

HINT:

Close the vise until it holds hub bolts. Do not tighten further.

(b) Using a screwdriver, remove the grease cap.

2. 4WD:

REMOVE OIL SEAL (INSIDE)

(a) Mount the axle hub in a soft jaw vise.

HINT:

Close the vise until it holds hub bolts. Do not tighten further.

(b) Using a screwdriver, remove the oil seal (inside).

3. 2WD:

REMOVE LOCK NUT AND ABS SPEED SENSOR ROTOR/SPACER

(a) Using a chisel and hammer, loosen the staked part of the lock nut.

NOTICE:

Be careful not to damage the bushing.

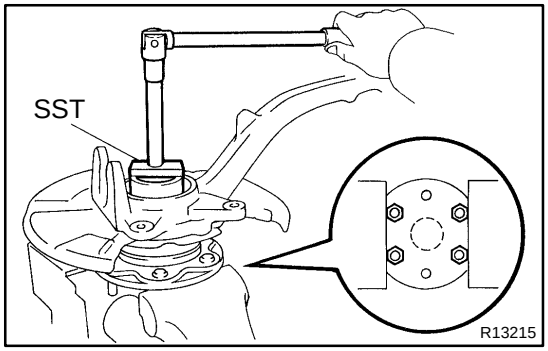

(b) Using SST, remove the lock nut.

SST 09318–12010

(c) Remove the ABS speed sensor rotor/spacer.

NOTICE:

Take care not to scratch the serration of the speed sensor rotor.

4. REMOVE AXLE HUB FROM STEERING KNUCKLE

(a) Remove the 4 bolts and shift the dust cover towards the hub side (outside).

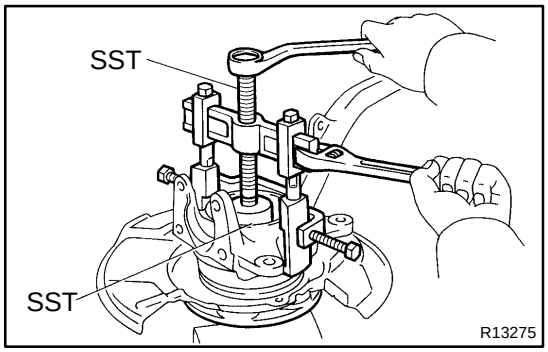

(b) Using SST, remove the axle hub from the steering knuckle.

SST 09710–30021 (09710–03051), 09950–40011 (09951–04020, 09952–04010, 09953–04020, 09954–04010, 09955–04031, 09957–04010, 09958–04011)

(c) Remove the dust cover from the steering knuckle.

(d) 4WD:

Remove the bearing spacer and ABS speed sensor rotor (w/ ABS)/spacer (w/o ABS).

NOTICE:

Take care not to scratch the serration of the speed sensor rotor.

5. REMOVE OIL SEAL (OUTSIDE)

Using a screwdriver, remove the oil seal (outside) from the steering knuckle.

6. REMOVE BEARING FROM STEERING KNUCKLE

(a) Using snap ring pliers, remove the snap ring.

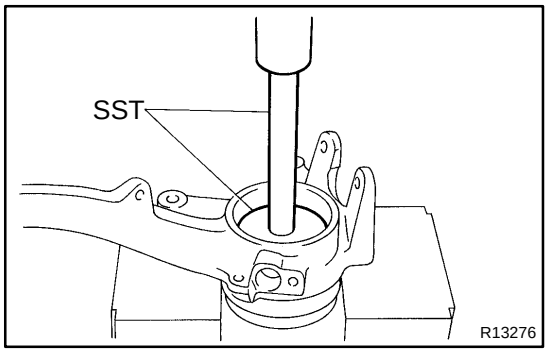

(b) Using SST and a press, remove the bearing from the steering knuckle.

SST 09950–60020 (09951–00810),
09950–70010 (09951–07150)

SA1K1–01

REASSEMBLY

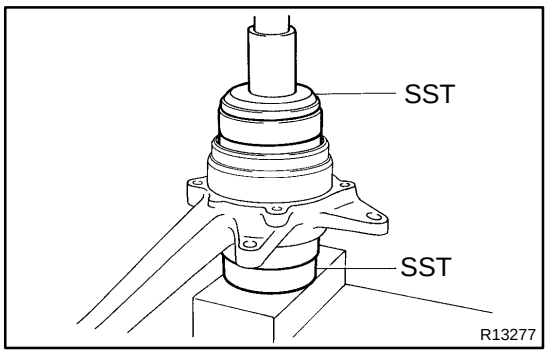

1. INSTALL NEW BEARING

(a) Using SST and a press, install a new bearing to the steering knuckle.
SST 09527–17011, 09950–60020 (09951–00910)

(b) Using snap ring pliers, install a new snap ring.

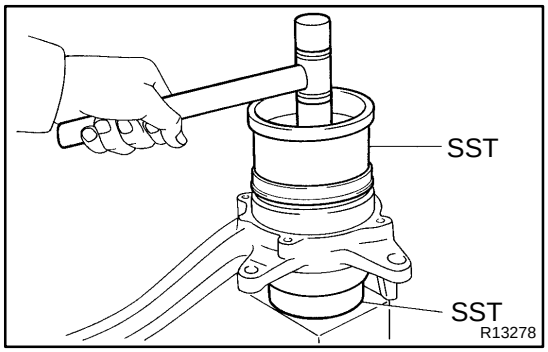

2. INSTALL NEW OIL SEAL (OUTSIDE)

(a) Using SST and a plastic hammer, install a new oil seal (outside).
SST 09223–15030, 09527–17011

(b) Coat MP grease to the oil seal lip.

3. INSTALL AXLE HUB TO STEERING KNUCKLE

(a) Install the dust cover to the steering knuckle with the 4 bolts.
Torque: 18 N·m (185 kgf·cm, 13 ft·lbf)

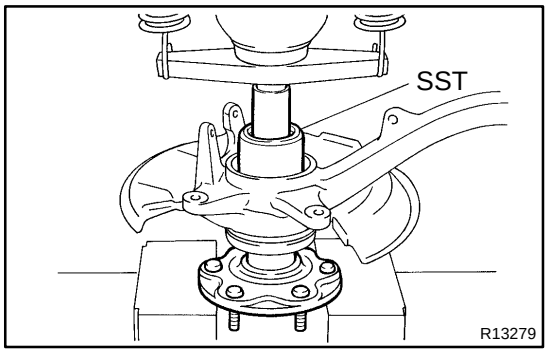

(b) Using SST and a press, install the axle hub to the steering knuckle.
SST 09649–17010

4. INSTALL ABS SPEED SENSOR ROTOR (w/ ABS)/ SPACER (w/o ABS)

NOTICE:

Do not scratch the serration of the speed sensor rotor.

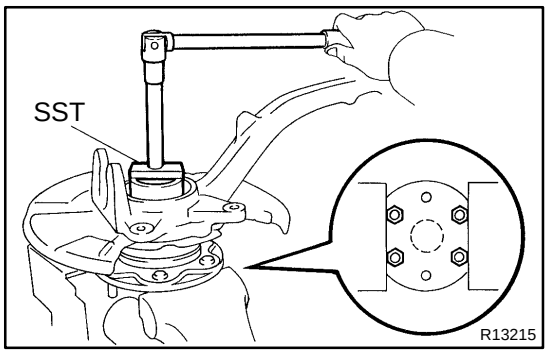

5. 2WD:
INSTALL NEW LOCK NUT

(a) Using SST, install and torque a new lock nut to the axle hub.
SST 09318–12010
Torque: 274 N·m (2,800 kgf·cm, 203 ft·lbf)

(b) Using a chisel and hammer, stake the lock nut.

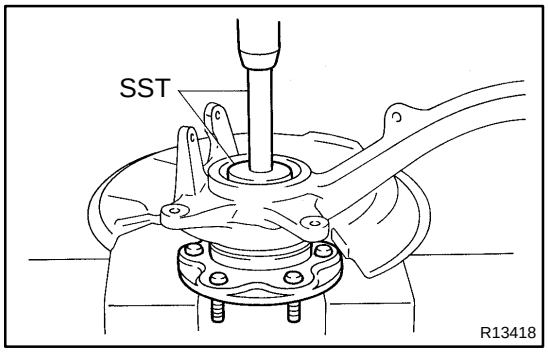

6. 4WD:
INSTALL BEARING SPACER

Using SST and a press, install the bearing spacer.
SST 09950–60010 (09951–00650),
09950–70010 (09951–07150)

7. 2WD:
INSTALL GREASE CAP

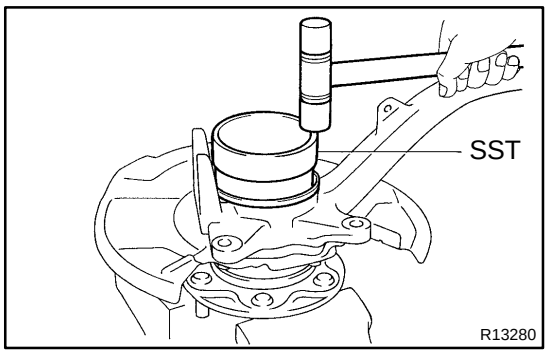

8. 4WD:

INSTALL NEW OIL SEAL (INSIDE)

(a) Using SST and a plastic hammer, install a new oil seal (inside).

SST 09527–17011

HINT:

Lightly strike the SST on its circumference evenly.

(b) Coat MP grease to the oil seal lip.

SA1G6–02

INSTALLATION

1. INSTALL STEERING KNUCKLE

(a) 4WD:

Insert the drive shaft into the axle hub and temporarily tighten the nut.

NOTICE:

Be careful not to damage the oil seal and drive shaft boot.

(b) Connect the steering knuckle to the upper suspension arm.

(c) Install the nut and a new cotter pin.

If the holes for the cotter pin are not aligned, tighten the nut further up to 60°.

Torque: 105 N·m (1,100 kgf·cm, 77 ft·lbf)

2. CONNECT LOWER BALL JOINT

Connect the lower ball joint to the steering knuckle with 4 bolts.

Torque: 80 N·m (820 kgf·cm, 59 ft·lbf)

3. INSTALL SHOCK ABSORBER (See page SA–59)

4. INSTALL BRAKE CALIPER

(a) Install the disc, brake caliper and 2 bolts.

Torque: 123 N·m (1,250 kgf·cm, 90 ft·lbf)

(b) Install the brake line clamp to the steering knuckle with bolt.

Torque: 28 N·m (285 kgf·cm, 21 ft·lbf)

5. w/ ABS:

CONNECT ABS SPEED SENSOR AND WIRE HARNESS CLAMP

Connect the ABS speed sensor and wire harness clamp to the steering knuckle with 2 bolts.

Torque: 8.0 N·m (82 kgf·cm, 71 ft·lbf)

6. 4WD:

INSTALL DRIVE SHAFT LOCK NUT

(a) While applying the brakes, tighten the nut.

Torque: 235 N·m (2,400 kgf·cm, 173 ft·lbf)

(b) Install the lock cap and a new cotter pin.

If the holes for the cotter pin are not aligned, tighten the nut further up to 60°.

7. INSTALL GREASE CAP

8. INSTALL FRONT WHEEL

Torque: 110 N·m (1,150 kgf·cm, 83 ft·lbf)

9. DEPRESS BRAKE PEDAL SEVERAL TIMES

10. CHECK FRONT WHEEL ALIGNMENT (See page SA–5)

11. CHECK ABS SPEED SENSOR SIGNAL (See page DI–448)

FRONT WHEEL HUB BOLT

SA1K2–01

REPLACEMENT

1. REMOVE FRONT WHEEL

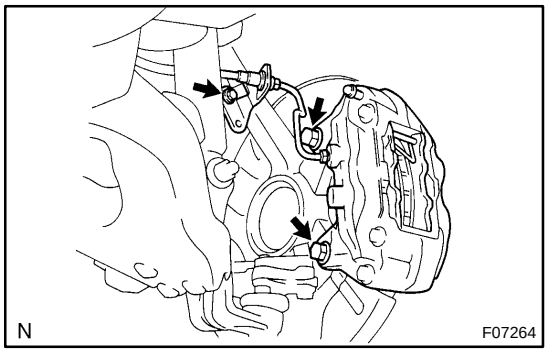

2. REMOVE BRAKE CALIPER AND DISC

(a) Remove the bolt and brake line clamp from the steering knuckle.

(b) Remove the 2 bolts, brake caliper and disc.

(c) Support the brake caliper securely.

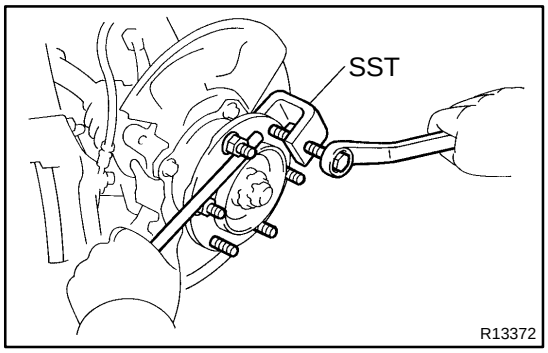

3. REMOVE HUB BOLT

Using SST and a screwdriver or an equivalent, remove the hub bolt.

SST 09650–17011

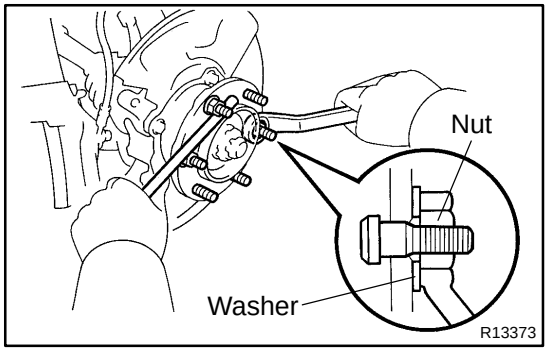

4. INSTALL HUB BOLT

(a) Install a washer and nut to a new hub bolt as shown in the illustration.

(b) Using a screwdriver or an equivalent to hold, install the hub bolt by torquing the nut.

(c) Remove the nut and washer.

5. INSTALL BRAKE DISC AND CALIPER

(a) Install the brake disc, caliper and 2 bolts.

Torque: 123 N·m (1,250 kgf·cm, 90 ft·lbf)

(b) Install the brake line clamp to the steering knuckle with bolt.

Torque: 28 N·m (285 kgf·cm, 21 ft·lbf)

6. INSTALL FRONT WHEEL

Torque: 110 N·m (1,150 kgf·cm, 83 ft·lbf)

7. DEPRESS BRAKE PEDAL SEVERAL TIMES

FRONT DRIVE SHAFT

COMPONENTS

SA09G–04

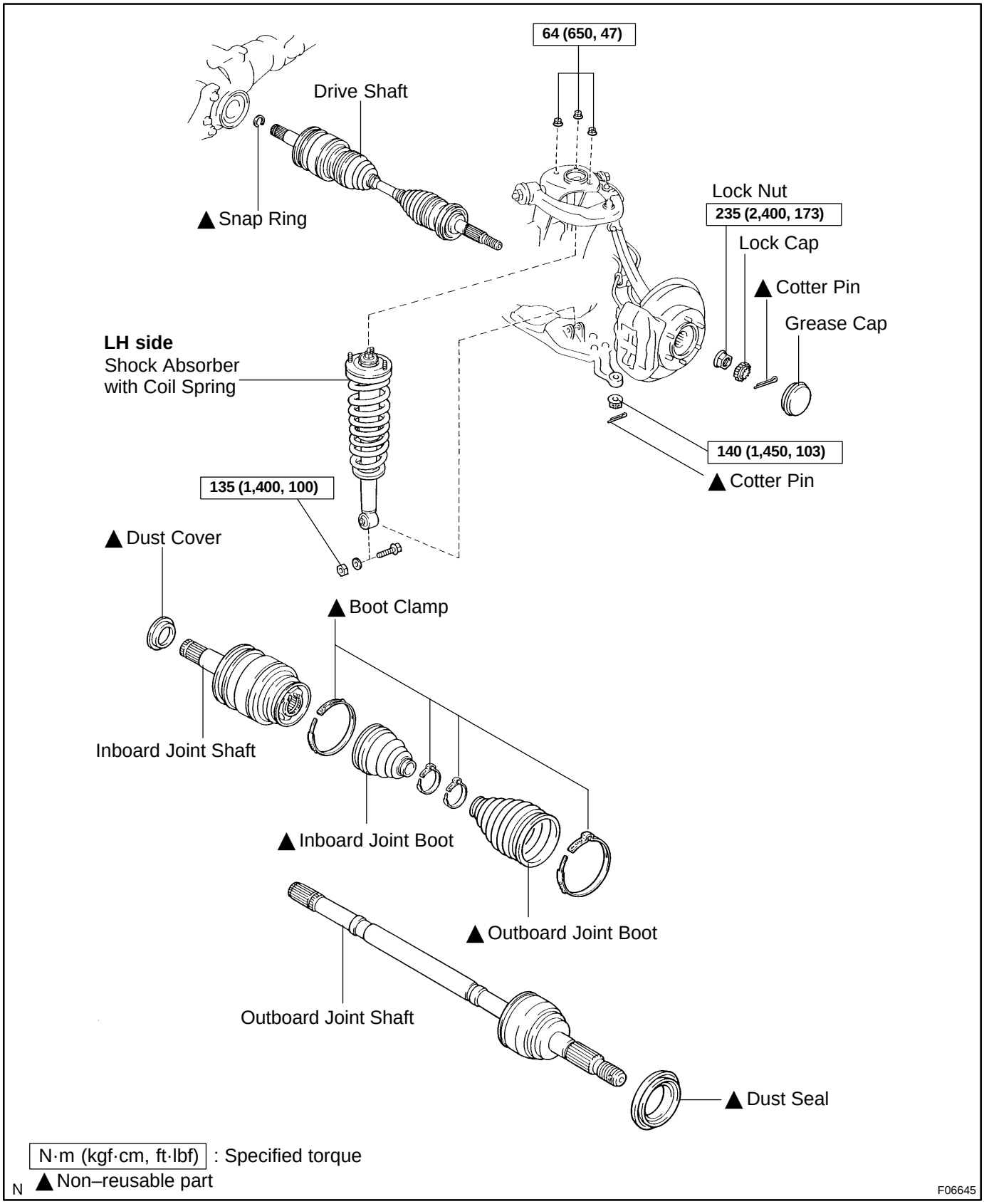

SA09H–04

REMOVAL

1. REMOVE FRONT WHEEL

2. REMOVE ENGINE UNDER COVER

3. DRAIN DIFFERENTIAL OIL

4. REMOVE DRIVE SHAFT LOCK NUT

(a) Using a screwdriver and hammer, remove the grease cap.

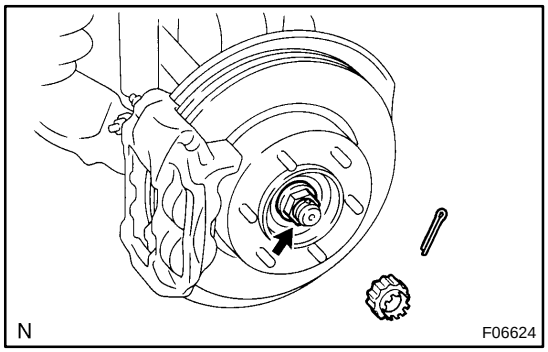

(b) Remove the cotter pin and lock cap.

(c) While applying the brakes, remove the lock nut.

5. DISCONNECT LOWER SUSPENSION ARM FROM LOWER BALL JOINT

(a) Remove the cotter pin and nut.

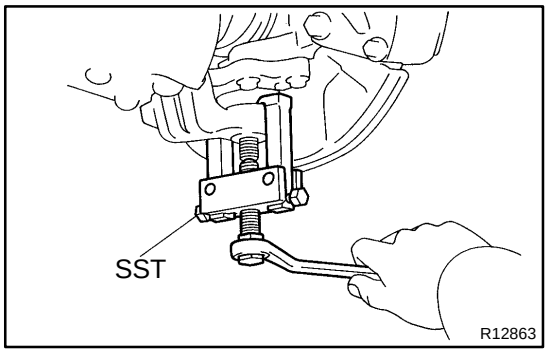

(b) Using SST, disconnect the lower suspension arm from the lower ball joint.

SST 09628–62011

6. DISCONNECT DRIVE SHAFT FROM STEERING KNUCKLE

(a) Using a plastic hammer, disengage the drive shaft from the axle hub.

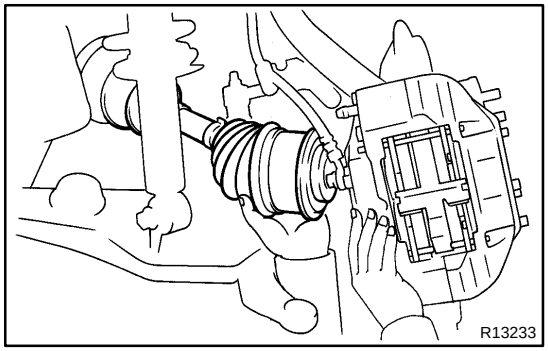

(b) Push the steering knuckle outward and disconnect the drive shaft from the steering knuckle.

NOTICE:

Be careful not to damage the oil seal, boots and dust seal.

7. LH drive shaft:

REMOVE LH SHOCK ABSORBER (See page SA–54)

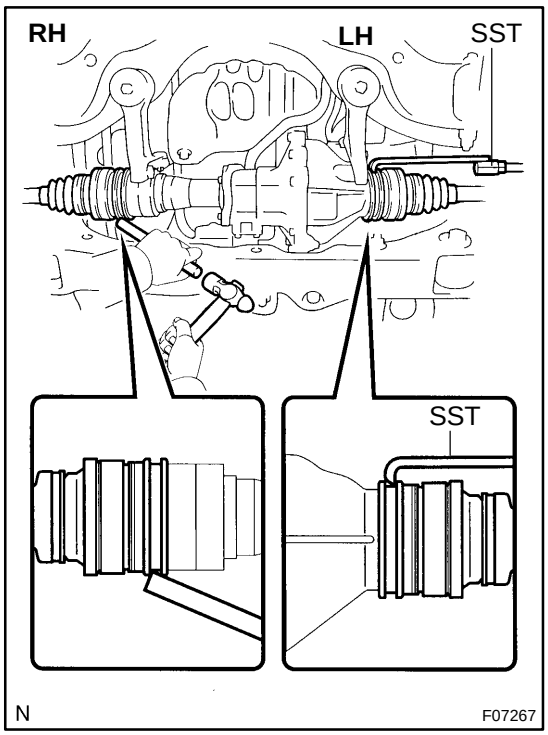

8. REMOVE DRIVE SHAFT

(a) RH drive shaft:
Using a brass bar and hammer, remove the RH drive shaft.

NOTICE:

Be careful not to damage the dust cover and oil seal.

(b) LH drive shaft:
Using SST, remove the LH drive shaft.
SST 09520–01010, 09520–24010 (09520–32040)

NOTICE:

Be careful not to damage the dust cover and oil seal.

(c) Using a screwdriver, remove the snap ring from the inboard joint shaft.

SA09I–03

DISASSEMBLY

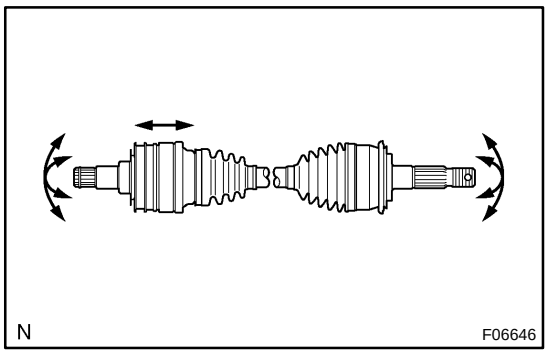

1. CHECK DRIVE SHAFT

(a) Check to see that there is no remarkable play in the outboard joint.

(b) Check to see that the inboard joint slides smoothly in the thrust direction.

(c) Check to see that there is no remarkable play in the radial direction of the inboard joint.

(d) Check the boots for damage.

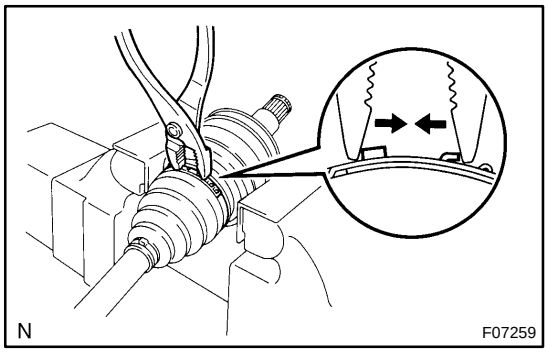

2. REMOVE INBOARD AND OUTBOARD JOINT BOOT CLAMPS

(a) Using pliers, pinch the claws to compress the large inboard joint boot clamp and remove it.

(b) Using a side cutter, cut the small inboard joint boot clamp and remove it.

(c) Using a side cutter, cut the 2 outboard joint boot clamps and remove them.

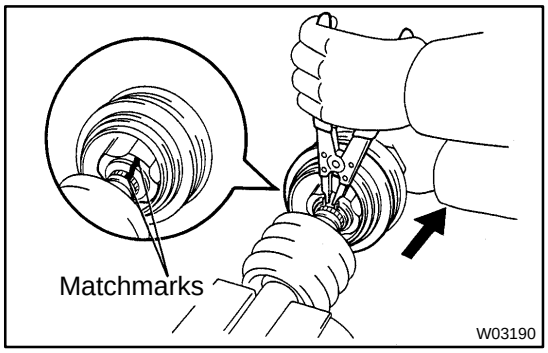

3. REMOVE INBOARD JOINT SHAFT FROM OUTBOARD JOINT SHAFT

(a) Place matchmarks on the inboard and outboard joint shafts.

NOTICE:

Do not punch the marks.

(b) Using a snap ring expander, pull out the outboard joint shaft while expanding the snap ring.

4. REMOVE INBOARD AND OUTBOARD JOINT BOOTS

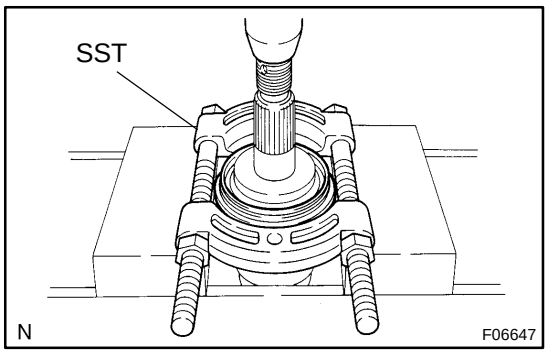

5. REMOVE DUST SEAL

Using SST and a press, remove the dust seal.

SST 09950–00020

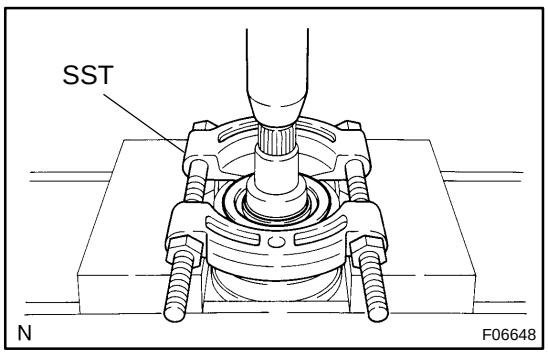

6. REMOVE DUST COVER

Using SST and a press, remove the dust cover.

SST 09950–00020

SA1K3–01

REASSEMBLY

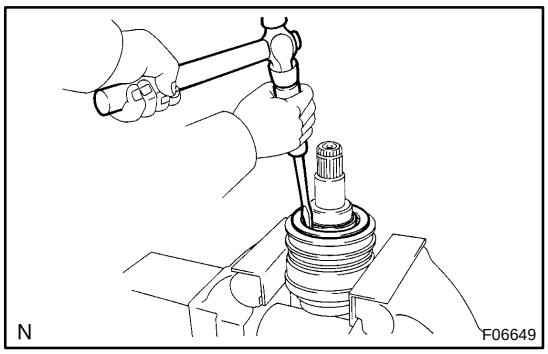

1. INSTALL DUST COVER

Using a screwdriver and hammer, install a new dust cover.

2. INSTALL DUST SEAL

Using a screwdriver and hammer, install a new dust seal.

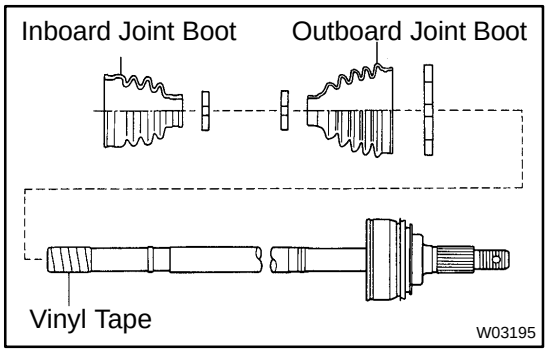

3. TEMPORARILY INSTALL OUTBOARD AND INBOARD JOINT BOOTS AND NEW BOOT CLAMPS

HINT:

- ▲ Before installing the boots, wrap the spline of the outboard joint shaft with vinyl tape to prevent the boots from bearing damaged.
- ▲ Before installing the boots, place 3 new clamps to the small boot ends and large boot end (outboard joint side).

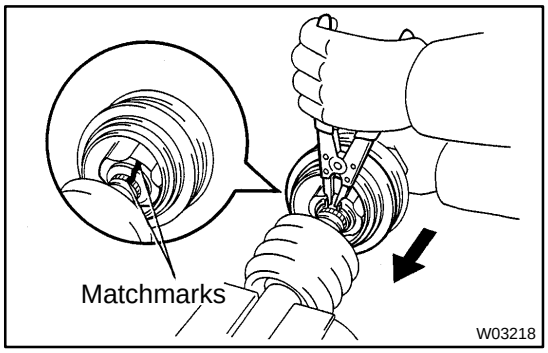

4. INSTALL INBOARD JOINT SHAFT TO OUTBOARD JOINT SHAFT

Align the matchmarks placed before disassembly, and using a snap ring expander, put in the inboard joint shaft while expanding the snap ring.

5. INSTALL BOOT TO OUTBOARD JOINT

Before assembling the boot, pack the outboard joint and boot with grease in the boot kit.

Grease capacity (Color = Black):
205 – 225 g (7.23 – 7.94 oz.)

6. INSTALL BOOT TO INBOARD JOINT SHAFT

(a) Pack the inboard joint and boot with grease in the boot kit.
Grease capacity (Color = Black):
190 – 210 g (6.70 – 7.41 oz.)

(b) Temporarily install the boot to the inboard joint shaft.

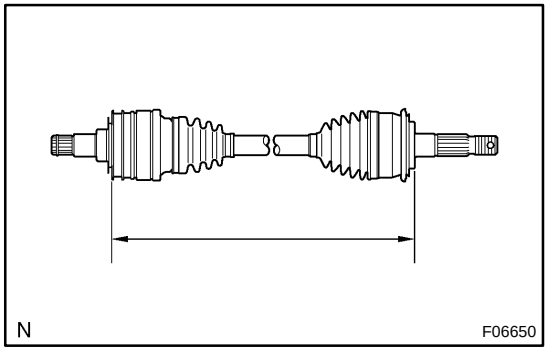

7. CHECK DRIVE SHAFT LENGTH

(a) Make sure that the 2 boots are on the shaft groove.

(b) Make sure that the 2 boots are not stretched or contracted when the drive shaft is at standard length.
Drive shaft standard length:
523.5 ± 2.0 mm (20.610 ± 0.079 in.)

8. INSTALL LARGE INBOARD JOINT BOOT CLAMP TO INBOARD JOINT SHAFT BOOT

(a) Place the large inboard joint boot clamp.

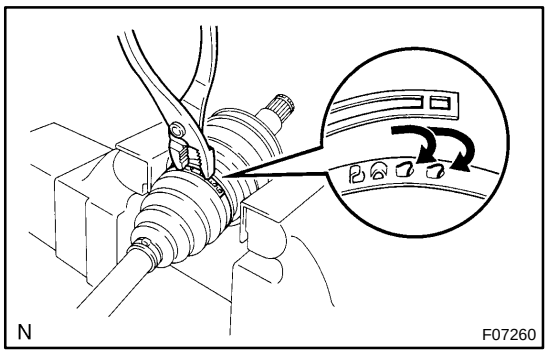

(b) Using pliers, compress the clamp and attach the claws.

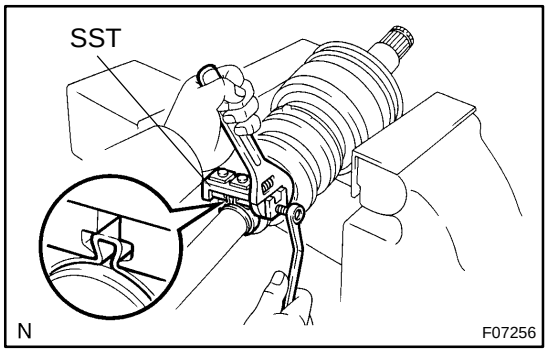

9. INSTALL OTHER BOOT CLAMPS TO BOTH BOOTS

(a) Secure the clamp onto the boot.

(b) Place SST onto the clamp.
SST 09521–24010

(c) Tighten the SST so that the clamp is pinched.

NOTICE:

Do not overtighten the SST.

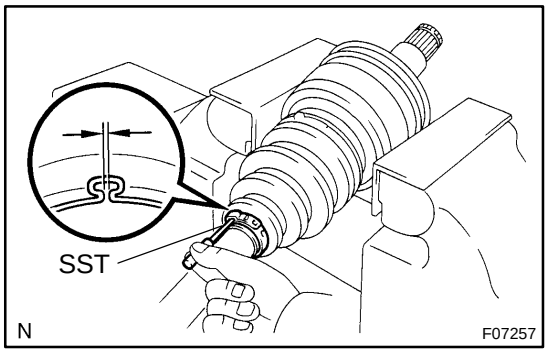

(d) Using SST, adjust the clearance of the clamp.
SST 09240–00020
Clearance: 1.0 – 1.5 mm (0.039 – 0.059 in.)

10. CHECK DRIVE SHAFT (See page SA–21)

SA09K–03

INSTALLATION

1. INSTALL DRIVE SHAFT TO DIFFERENTIAL

(a) Install a new snap ring to the inboard joint shaft.

(b) Coat the gear oil to the inboard joint shaft and differential case sliding surface.

(c) Set the snap ring with opening side facing downward.

(d) Using a brass bar and hammer, install the drive shaft.

NOTICE:

Be careful not to damage the dust cover and oil seal.

HINT:

Whether the inboard joint shaft is in contact with the pinion shaft or not can be known from the sound or feeling when driving it in.

(e) Check that there is 2 – 3 mm (0.08 – 0.12 in.) of play in the axial direction.

(f) Check that the drive shaft cannot be removed by hand.

2. LH drive shaft:

INSTALL LH SHOCK ABSORBER (See page SA–59)

3. CONNECT DRIVE SHAFT TO STEERING KNUCKLE

NOTICE:

Be careful not to damage the oil seal, boots and dust seal.

4. CONNECT LOWER SUSPENSION ARM TO LOWER BALL JOINT

(a) Connect the lower suspension arm to the lower ball joint.

(b) Install the nut and a new cotter pin.

If the holes for the cotter pin are not aligned, tighten the nut further up to 60˚.

HINT:

Face the hole for the cotter pin forward.

Torque: 140 N·m (1,450 kgf·cm, 103 ft·lbf)

5. INSTALL DRIVE SHAFT LOCK NUT

(a) While applying brakes, install the nut.

Torque: 235 N·m (2,400 kgf·cm, 173 ft·lbf)

(b) Install the lock cap and a new cotter pin.

If the holes for the cotter pin are not aligned, tighten the nut further up to 60˚.

6. FILL DIFFERENTIAL WITH HYPOID GEAR OIL (See page SA–26)

7. INSTALL ENGINE UNDER COVER

8. INSTALL FRONT WHEEL

Torque: 110 N·m (1,150 kgf·cm, 83 ft·lbf)

FRONT DIFFERENTIAL REAR OIL SEAL

COMPONENTS

SA09L–03

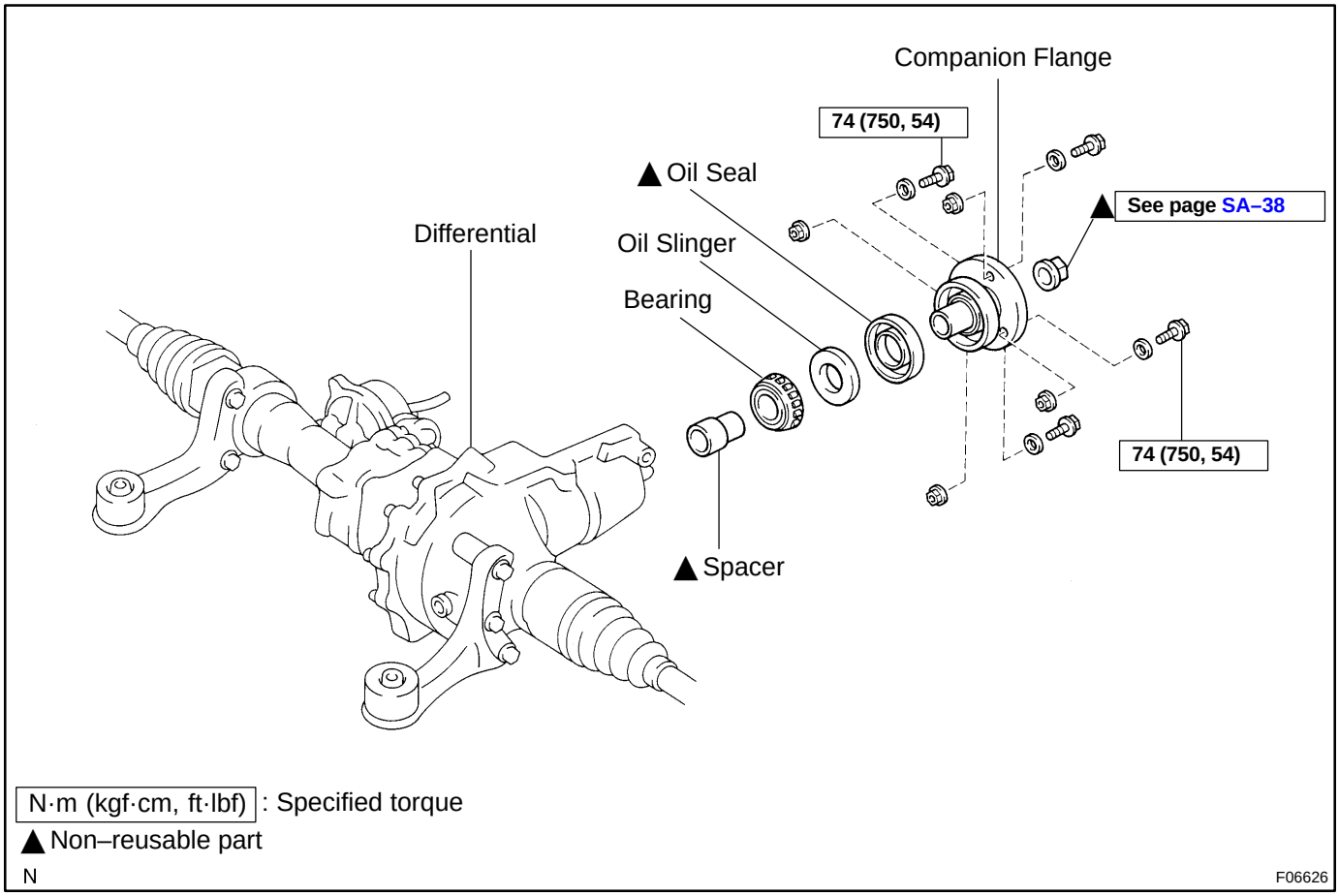

N·m (kgf·cm, ft·lbf) : Specified torque
▲ Non–reusable part

N

F06626

SA09M–07

REPLACEMENT

1. **REMOVE ENGINE UNDER COVER**
2. **DRAIN DIFFERENTIAL OIL**
3. **REMOVE FRONT PROPELLER SHAFT**
   (See page PR–10)

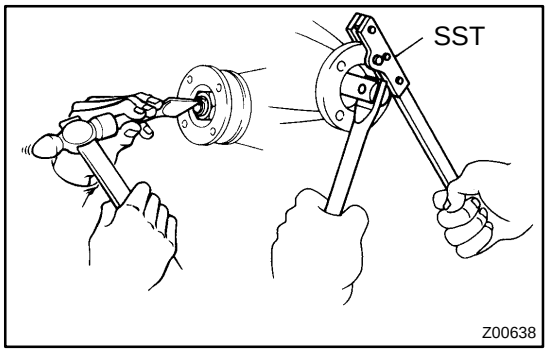

4. **REMOVE COMPANION FLANGE**

(a) Using a chisel and hammer, loosen the staked part of the nut.

(b) Using SST to hold the flange, remove the nut.
SST 09330–00021

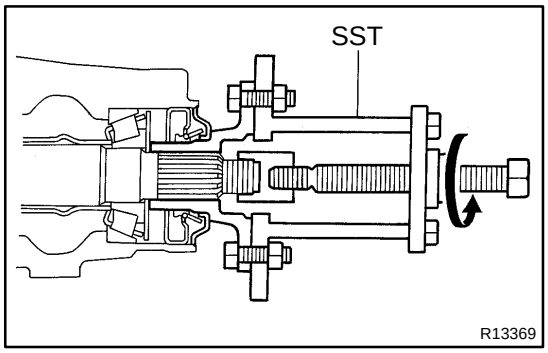

(c) Using SST, remove the companion flange.
SST 09950–30012 (09951–03010, 09953–03010, 09954–03010, 09955–03030, 09956–03020)

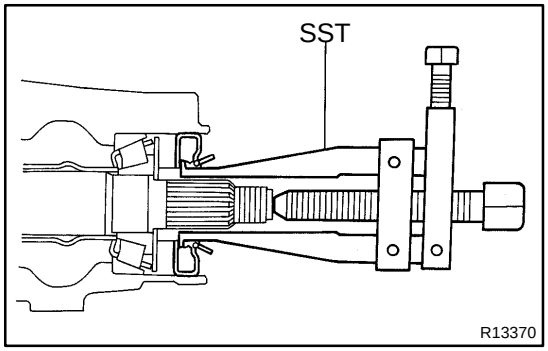

5. **REMOVE OIL SEAL AND OIL SLINGER**

(a) Using SST, remove the oil seal.
SST 09308–10010

(b) Remove the oil slinger.

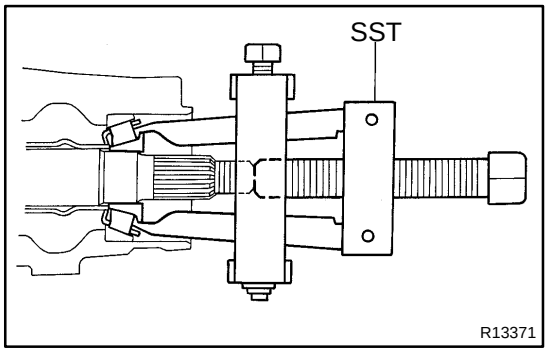

6. **REMOVE REAR BEARING AND BEARING SPACER**

(a) Using SST, remove the rear bearing from the drive pinion.
SST 09556–22010

(b) Remove the bearing spacer.

7. **INSTALL BEARING SPACER, REAR BEARING AND OIL SLINGER**

(a) Install a new bearing spacer and place the rear bearing and oil slinger.

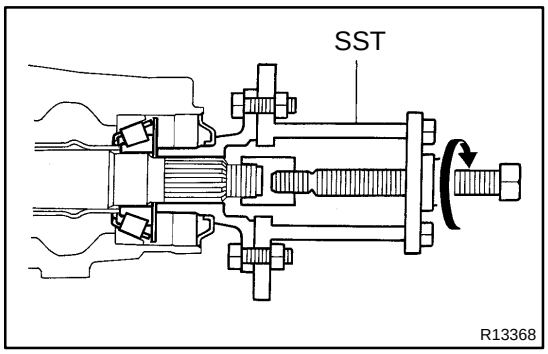

(b) Using SST and the companion flange, install the rear bearing, then remove the companion flange.
SST 09950–30012 (09951–03010, 09953–03010, 09954–03010, 09955–03030, 09956–03020)

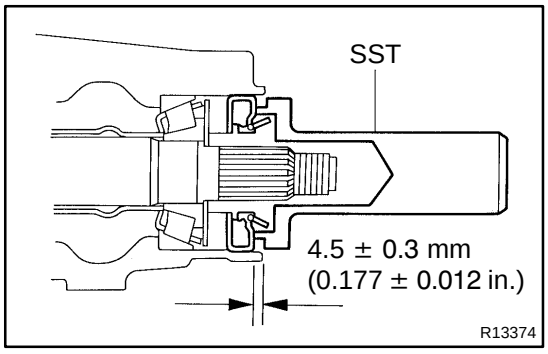

8. INSTALL OIL SEAL

(a) Coat a new oil seal lip with MP grease.

(b) Using SST and a hammer, install the oil seal.
SST 09554–22010
Oil seal drive in depth: 4.5 ± 0.3 mm (0.177 ± 0.012 in.)

9. INSTALL COMPANION FLANGE

(a) Place the companion flange on the drive pinion.

(b) Coat the threads of a new nut with hypoid gear oil.

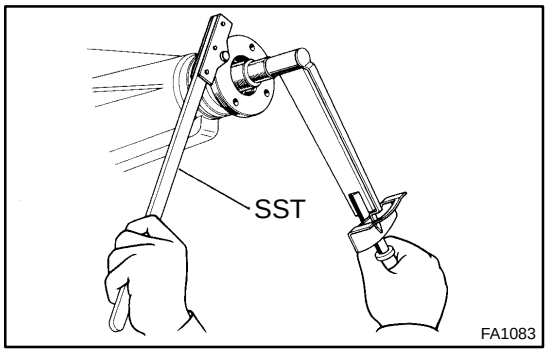

(c) Using SST to hold the flange, torque the nut.
SST 09330–00021
Torque: 108 N·m (1,100 kgf·cm, 80 ft·lbf)

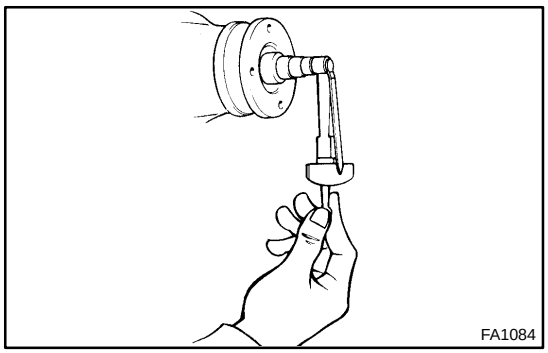

10. ADJUST DRIVE PINION PRELOAD (See page SA–38)

11. STAKE DRIVE PINION NUT

12. INSTALL FRONT PROPELLER SHAFT (See page PR–15)

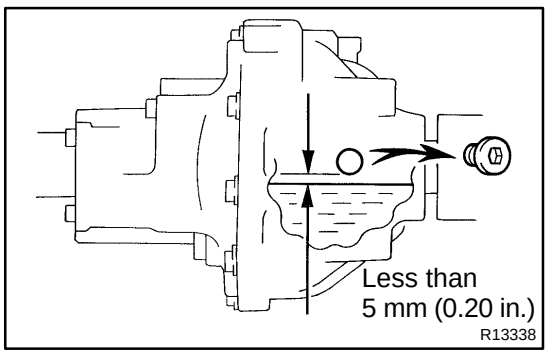

13. FILL DIFFERENTIAL WITH HYPOID GEAR OIL
Torque: 39 N·m (400 kgf·cm, 29 ft·lbf)
Oil type: Hypoid gear oil API GL–5
Recommended oil viscosity: SAE 75W–90
Capacity: 1.15 liters (1.22 US qts, 1.01 Imp. qts)

14. INSTALL ENGINE UNDER COVER

FRONT DIFFERENTIAL CARRIER

SA09N–03

COMPONENTS

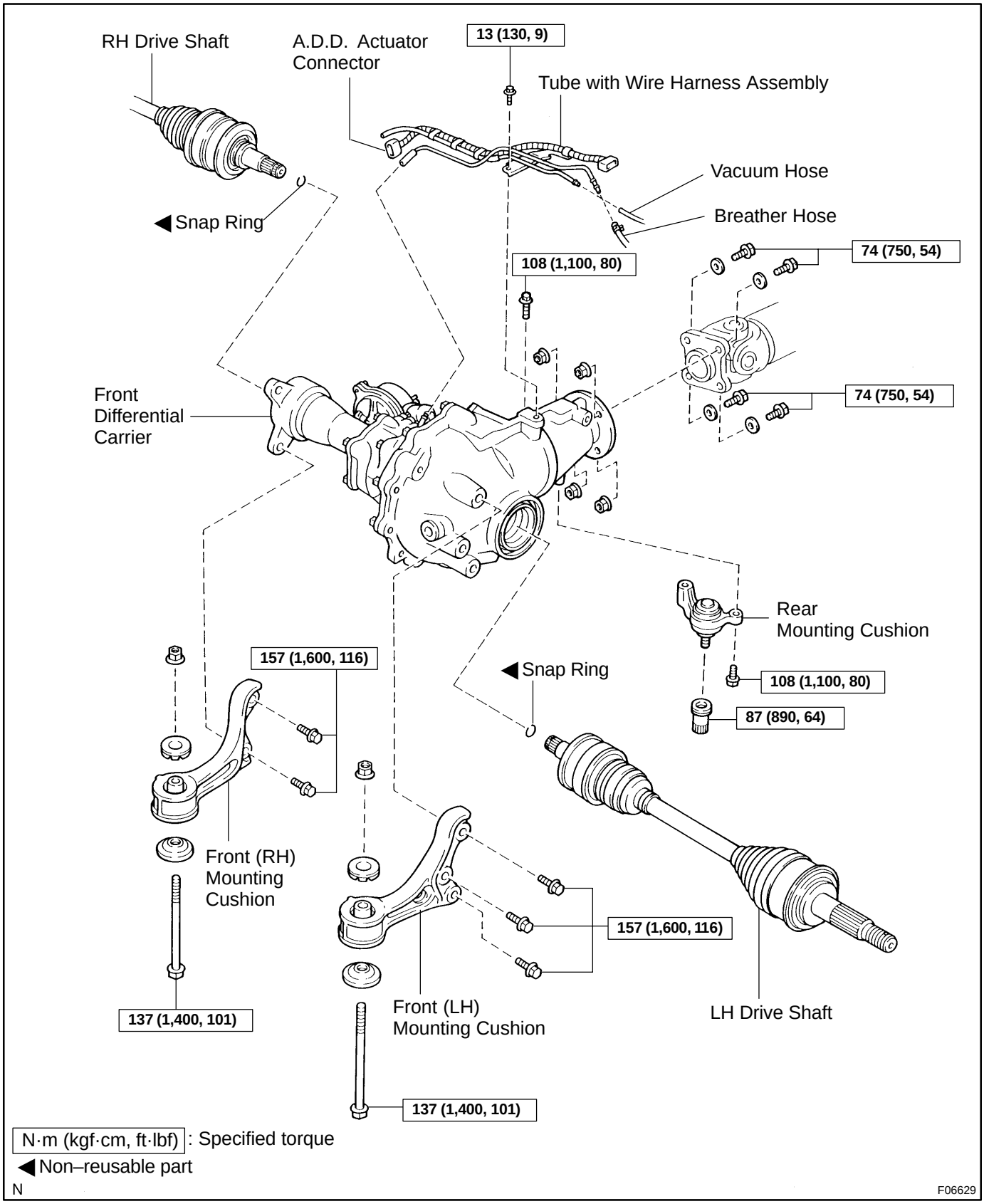

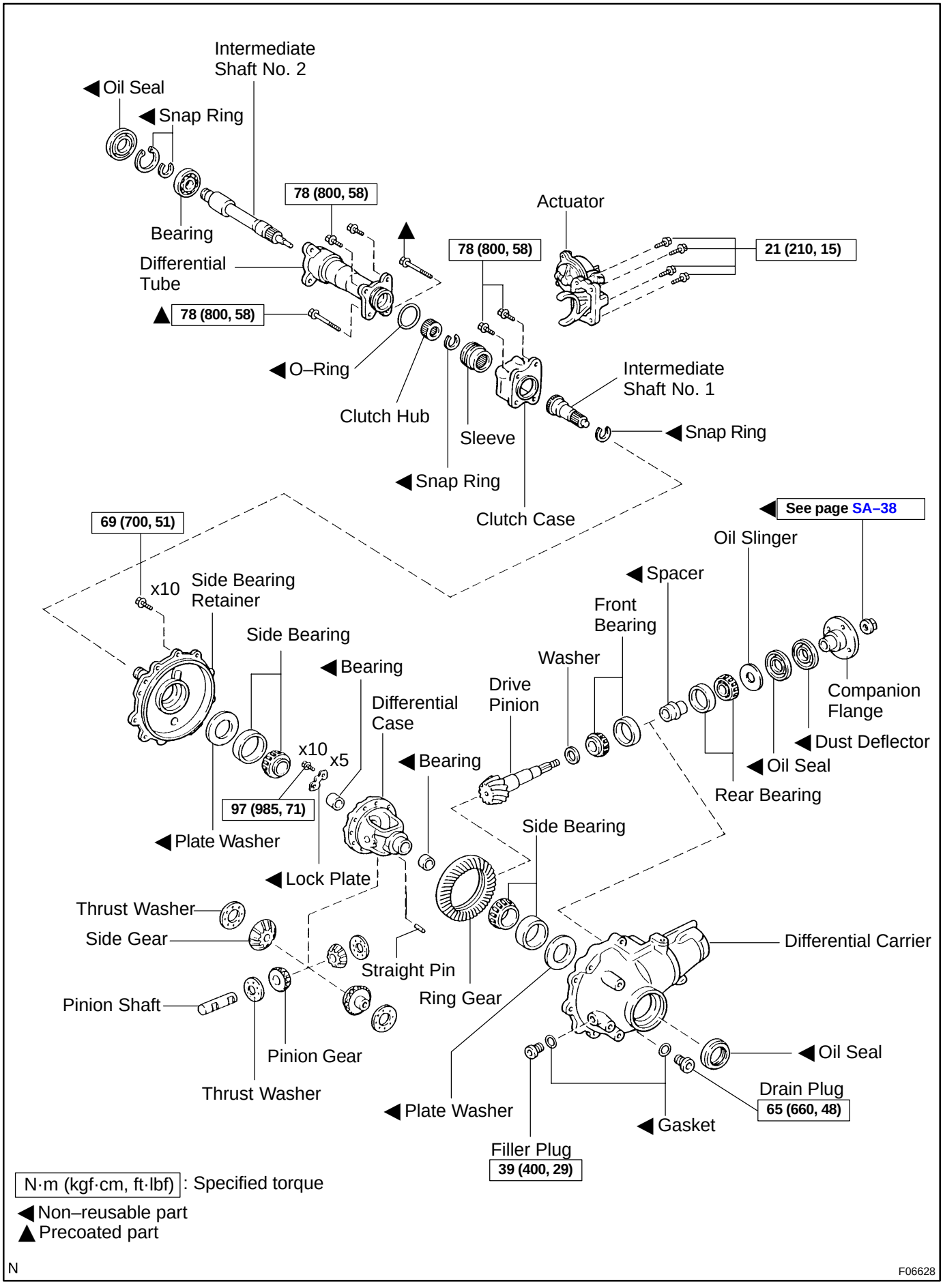

N·m (kgf·cm, ft·lbf) : Specified torque
◀ Non–reusable part
▲ Precoated part

N

F06628

SA09O–03

REMOVAL

1. DRAIN DIFFERENTIAL OIL

2. REMOVE DRIVE SHAFTS (See page SA–19)

3. DISCONNECT FRONT PROPELLER SHAFT (See page PR–10)

HINT:

Support the front propeller shaft securely.

4. REMOVE TUBE WITH WIRE HARNESS ASSEMBLY

(a) Disconnect the breather hose, vacuum hose and actuator connector.

(b) Remove the bolt and tube with wire harness assembly.

5. REMOVE FRONT DIFFERENTIAL CARRIER

(a) Support the front differential with a jack.

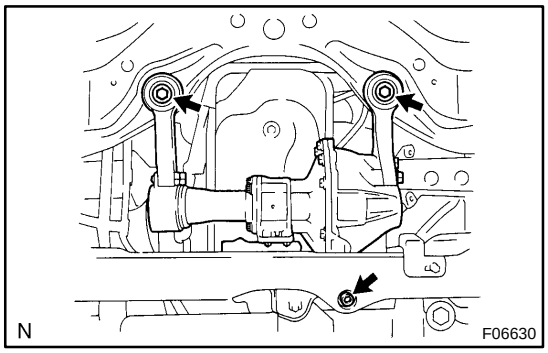

(b) Using a hexagon (12 mm) wrench, remove the rear mounting nut.

(c) Remove the 2 front mounting bolts.

(d) Lower the jack and remove the front differential carrier.

6. REMOVE DIFFERENTIAL MOUNTING CUSHIONS

(a) Remove the 2 bolts and rear mounting cushion.

(b) Remove the 5 bolts and 2 front mounting cushions.

SA09P–07

DISASSEMBLY

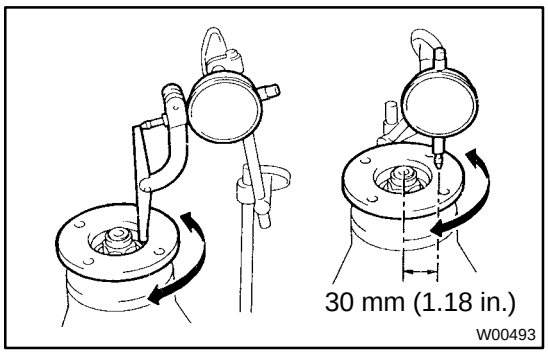

1. CHECK COMPANION FLANGE RUNOUT

Using a dial indicator, measure the vertical and lateral runout of the companion flange.

Maximum runout: 0.10 mm (0.0039 in.)

If the runout exceeds the maximum, replace the companion flange.

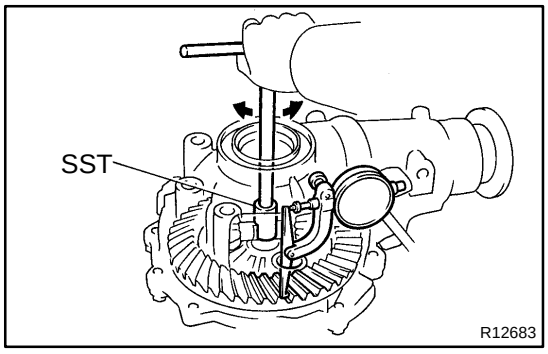

2. CHECK RING GEAR BACKLASH

Using SST and a dial indicator, measure the ring gear backlash.

SST 09564–32011

Backlash: 0.13 – 0.18 mm (0.0051 – 0.0071 in.)

HINT:

Measure at 3 or more points on the circumference of the ring gear.

If the backlash is not within the specified value, adjust the side bearing preload or repair as necessary.

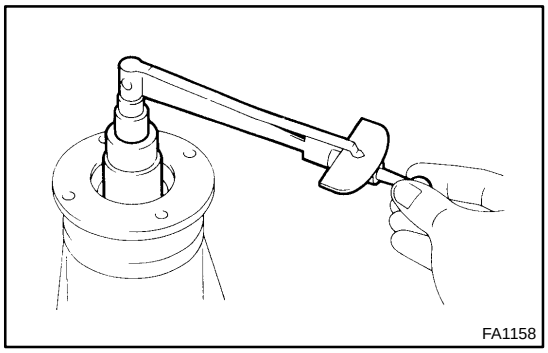

3. MEASURE DRIVE PINION PRELOAD

Using a torque wrench, measure the preload using the backlash between the drive pinion and ring gear.

Preload (at starting):
0.6 – 1.0 N·m (6 – 10 kgf·cm, 5.2 – 8.7 in.·lbf)

4. CHECK TOTAL PRELOAD

Using a torque wrench, measure the total preload with the teeth of the drive pinion and ring gear in contact.

Total preload (at starting):
Drive pinion preload plus 0.4 – 0.6 N·m (4 – 6 kgf·cm, 3.5 – 5.2 in.·lbf)

If necessary, disassemble and inspect the differential.

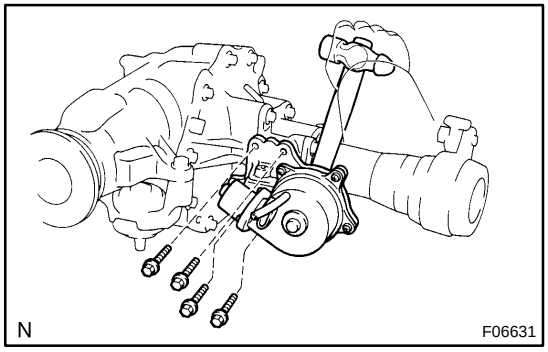

5. REMOVE A.D.D. ACTUATOR

(a) Remove the 4 bolts.

(b) Using a hammer handle, remove the actuator.

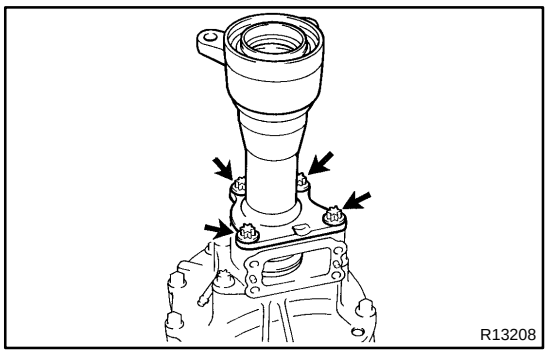

6. REMOVE DIFFERENTIAL TUBE

(a) Using a torx socket (E14), remove the 4 torx bolts.

(b) Using a plastic hammer, tap on the differential tube to remove it.

(c) Remove the sleeve.

(d) Remove the O–ring from the differential tube.

7. REMOVE CLUTCH CASE

(a) Using a torx socket (E14), remove the 2 torx bolts.

(b) Using a plastic hammer, tap on the clutch case to remove it.

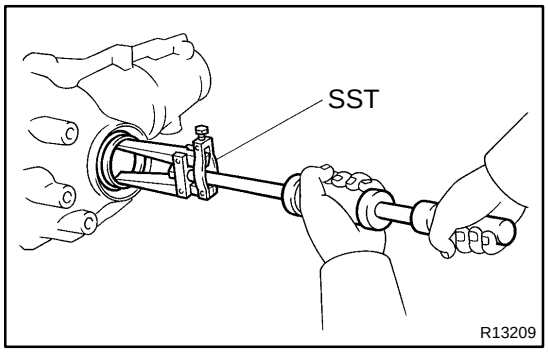

8. REMOVE SIDE OIL SEAL

Using SST, remove the side oil seal.

SST 09308–00010

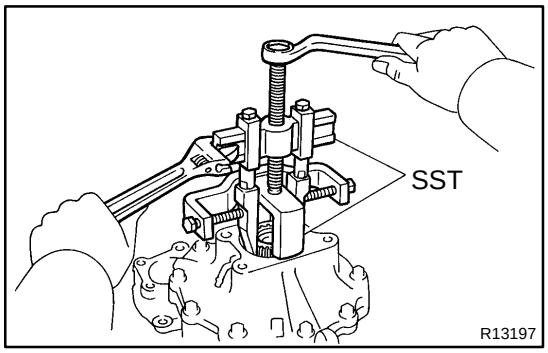

9. REMOVE INTERMEDIATE SHAFT NO. 1

(a) Using SST, remove the intermediate shaft No. 1.

SST 09350–20015 (09369–20040), 09950–40011 (09951–04010, 09952–04010, 09953–04020, 09954–04010, 09955–04011, 09957–04010, 09958–04011)

(b) Remove the snap ring.

10. REMOVE COMPANION FLANGE

(a) Using a chisel and hammer, unstake the nut.

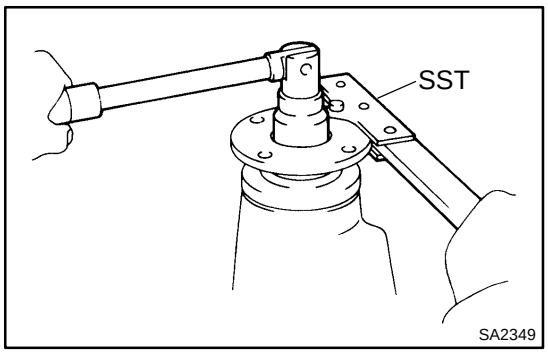

(b) Using SST to hold the flange, remove the nut.

SST 09330–00021

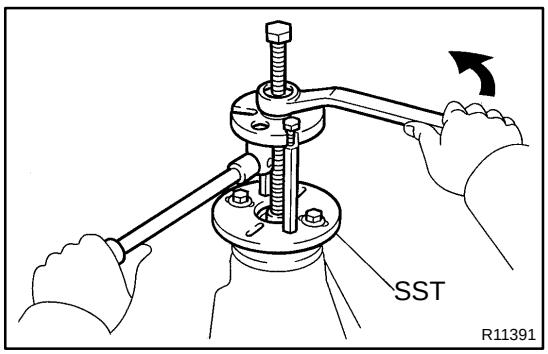

(c) Using SST, remove the companion flange.

SST 09950–30012 (09951–03010, 09953–03010, 09954–03010, 09955–03030, 09956–03020)

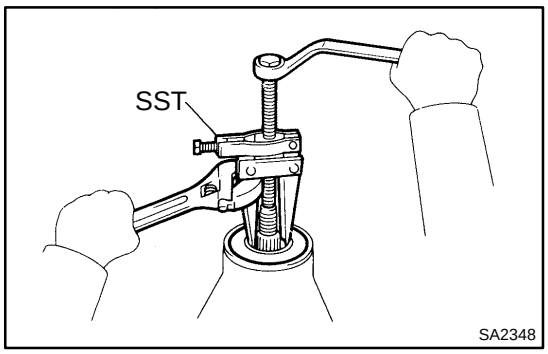

11. REMOVE OIL SEAL AND OIL SLINGER

(a) Using SST, remove the oil seal.
SST 09308–10010

(b) Remove the oil slinger.

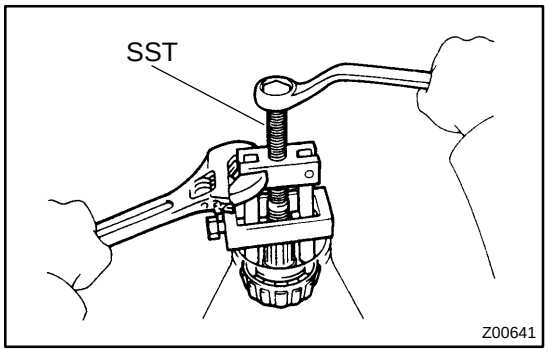

12. REMOVE REAR BEARING AND BEARING SPACER

(a) Using SST, remove the rear bearing from the drive pinion.
SST 09556–22010

(b) Remove the bearing spacer.

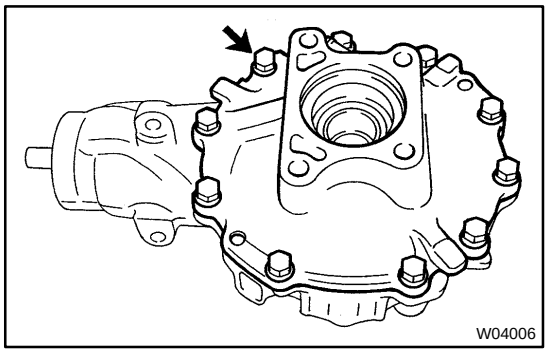

13. REMOVE SIDE BEARING RETAINER

Remove the 10 bolts and tap out the retainer with a plastic hammer.

14. REMOVE DIFFERENTIAL CASE ASSEMBLY

15. REMOVE DRIVE PINION FROM DIFFERENTIAL CARRIER

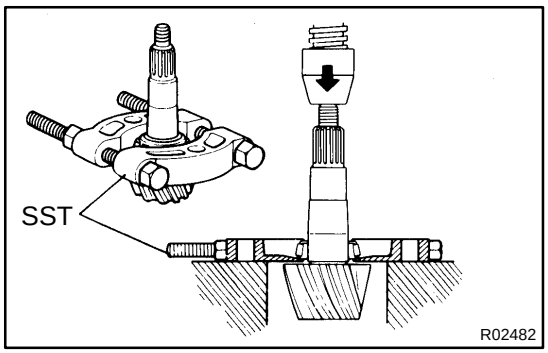

16. REMOVE DRIVE PINION FRONT BEARING

Using SST and a press, remove the bearing and washer from the drive pinion.
SST 09950–00020

HINT:
If the drive pinion or ring gear is damaged, replace them as a set.

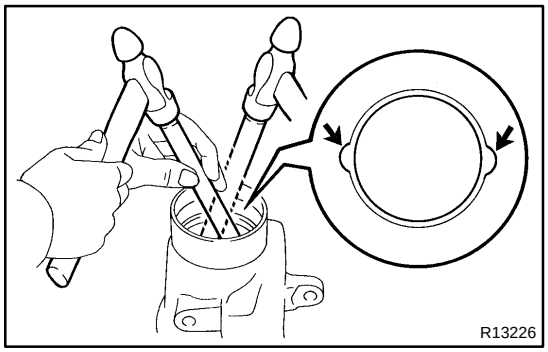

17. REMOVE DRIVE PINION BEARING OUTER RACES

(a) Using a brass bar and hammer, remove the front bearing outer race.

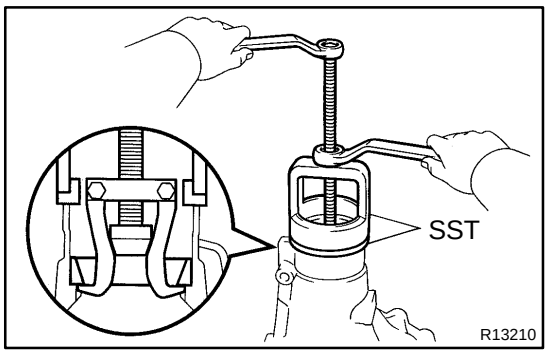

(b) Using SST, remove the rear bearing outer race.
SST 09502–12010, 09612–65014 (09612–01020, 09612–01050)

18. REMOVE SIDE BEARING OUTER RACES

HINT:

- ▲ Measure the plate washer thickness and note it down.
- ▲ Tag the bearing outer races to show the location for reassembling.

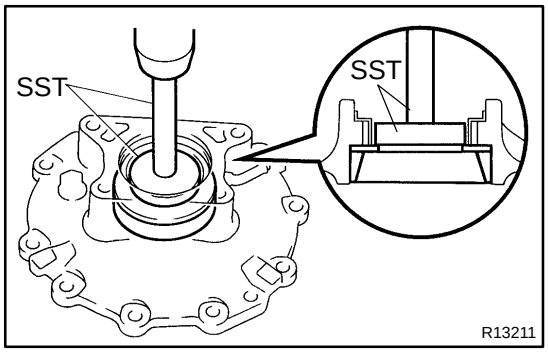

(a) Using SST and a press, remove the plate washer and outer race from the bearing retainer.
SST 09950–60010 (09951–00540), 09950–70010 (09951–07150)

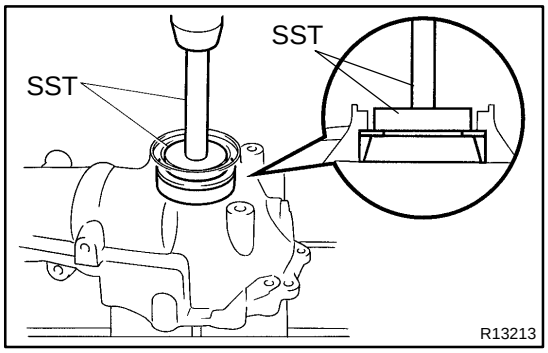

(b) Using SST and a press, remove the plate washer and outer race from the differential carrier.
SST 09950–60010 (09951–00650), 09950–70010 (09951–07150)

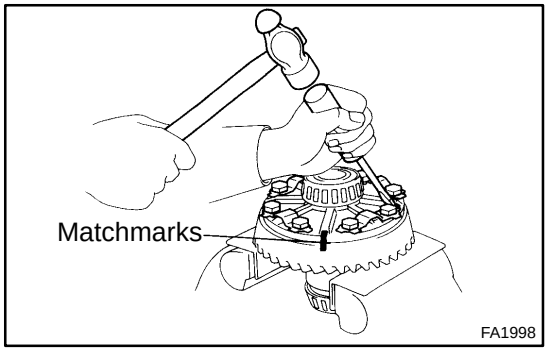

19. REMOVE RING GEAR

(a) Place matchmarks on the ring gear and differential case.
(b) Using a screwdriver and hammer, unstake the 5 lock plates.
(c) Remove the 10 bolts and 5 lock plates.
(d) Using a plastic hammer, tap on the ring gear to separate it from the differential case.

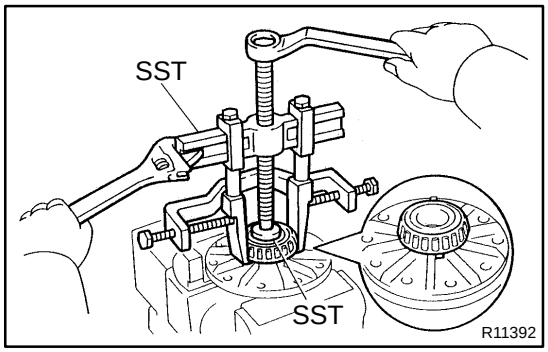

20. REMOVE SIDE BEARINGS

Using SST, remove the 2 side bearings from the differential case.
SST 09950–40011 (09951–04010, 09952–04010, 09953–04020, 09954–04010, 09955–04061, 09957–04010, 09958–04011), 09950–60010 (09951–00480)

HINT:

Fix the claws of SST to the notch in the differential case.

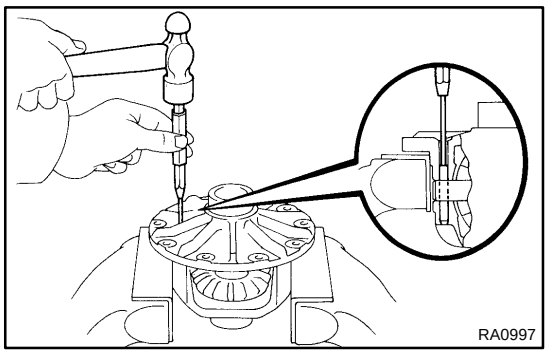

21. DISASSEMBLE DIFFERENTIAL CASE ASSEMBLY

(a) Using a pin punch and hammer, remove the straight pin.

(b) Remove the pinion shaft, 2 pinion gears, pinion gear thrust washers, side gears and side gear thrust washers from the differential case.

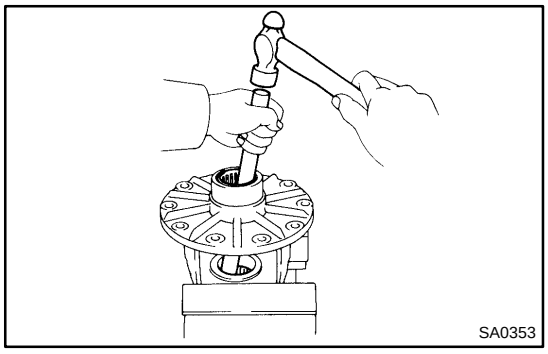

22. REMOVE BEARINGS

Using a brass bar and hammer, remove the 2 bearings.

SA1K4–01

REPLACEMENT

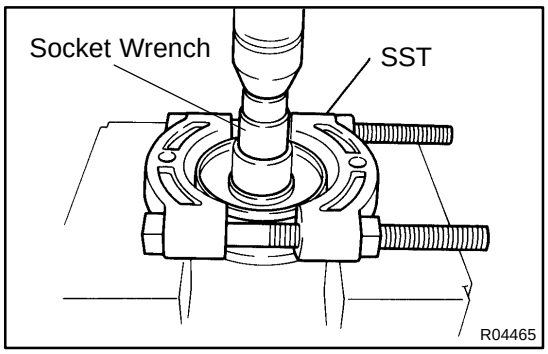

1. REPLACE COMPANION FLANGE DUST DEFLECTOR, IF NECESSARY

(a) Using SST, a socket wrench and a press, remove the dust deflector.
SST 09950–00020

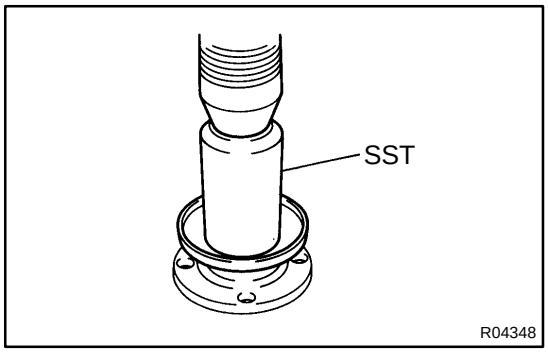

(b) Using SST and a press, install a new dust deflector.
SST 09636–20010

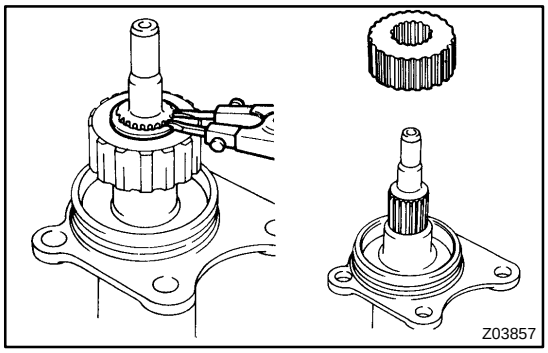

2. REPLACE INTERMEDIATE SHAFT NO. 2, IF NECESSARY

(a) Remove the clutch hub.
(1) Using a snap ring expander, remove the snap ring.
(2) Remove the clutch hub from the intermediate shaft No. 2.

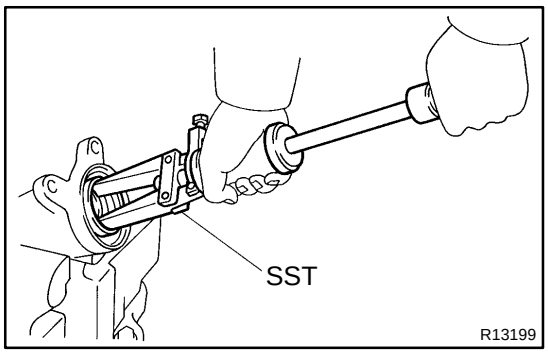

(b) Remove the oil seal.
Using SST, remove the oil seal from the tube.
SST 09308–00010

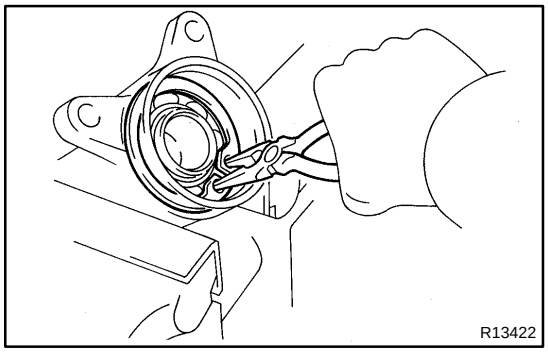

(c) Remove the intermediate shaft No. 2 from the tube.
(1) Using needle nose pliers, remove the snap ring.
(2) Remove the shaft from the tube.

(d) Remove the intermediate shaft No. 2 bearing.
(1) Using a snap ring expander, remove the snap ring.

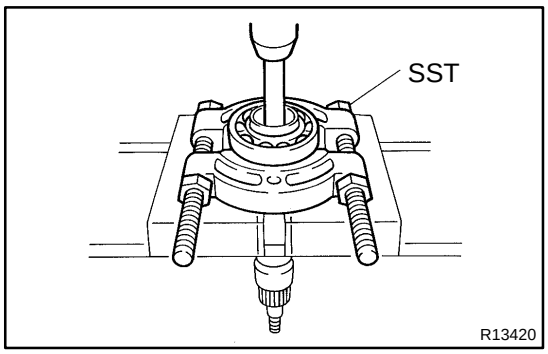

(2) Using SST, a brass bar and press, remove the bearing.

SST 09950–00020

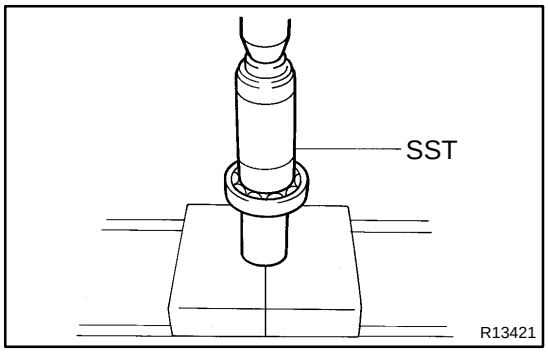

(e) Install a new intermediate shaft No. 2 bearing.
(1) Using SST and a press, install a new bearing.
SST 09309–37010
(2) Using a snap ring expander, install a new snap ring.

(f) Install the intermediate shaft No. 2 to the tube.
(1) Install the shaft into the tube.
(2) Using needle nose pliers, install a new snap ring.

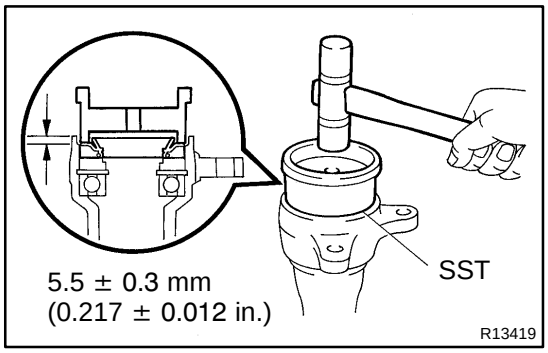

(g) Install a new oil seal.
(1) Using SST and a plastic hammer, install a new oil seal.
SST 09223–15020
Oil seal drive in depth: 5.5 ± 0.3 mm (0.217 ± 0.012 in.)
(2) Coat the oil seal lip with MP grease.

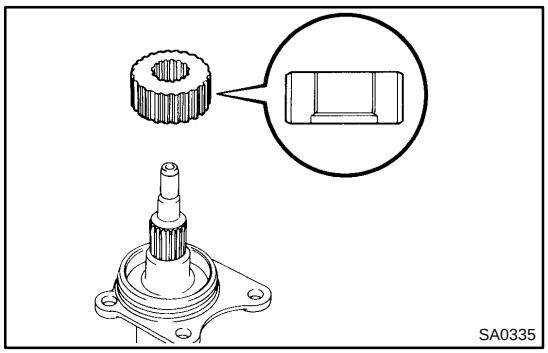

(h) Install the clutch hub.
(1) Install the clutch hub to the shaft.
(2) Using a snap ring expander, install a new snap ring.

SA09R–07

REASSEMBLY

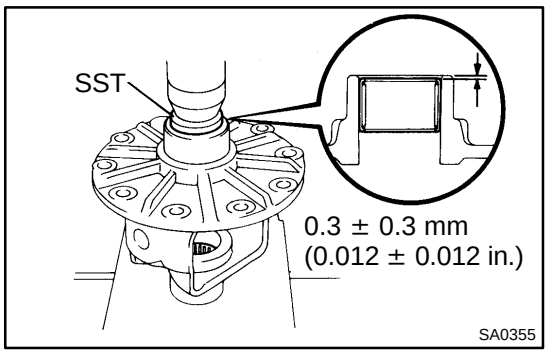

1. INSTALL NEW BEARINGS

Using SST and a press, install 2 new bearings.

SST 09950–60010 (09951–00380)

Bearing press in depth:
0.3 ± 0.3 mm (0.012 ± 0.012 in.)

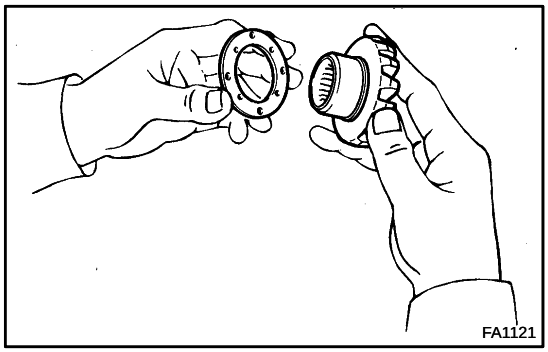

2. ASSEMBLE DIFFERENTIAL CASE

(a) Install the 2 thrust washers on the side gears.

(b) Install the 2 side gears, pinion gears, pinion gear thrust washers and pinion shaft in the differential case.

HINT:
Align the holes for the straight pin in the differential case and pinion shaft.

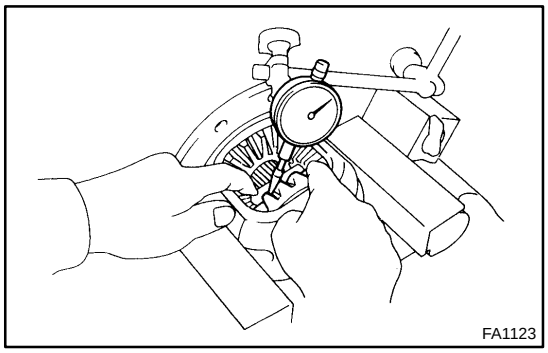

(c) Using a dial indicator, measure the side gear backlash while holding one pinion gear toward the differential case.

Backlash: 0 – 0.20 mm (0 – 0.0079 in.)

If the backlash is not within the specified value, replace the side gear thrust washer with the one of an appropriate thickness.

HINT:
Refer to the following table to select thrust washers which will ensure that the backlash is within the specified value.

Washer thickness:

Thickness mm (in.)	Thickness mm (in.)
0.96 – 1.04 (0.0378 – 0.0409)	1.16 – 1.24 (0.0457 – 0.0488)
1.06 – 1.14 (0.0417 – 0.0449)	1.26 – 1.34 (0.0496 – 0.0528)

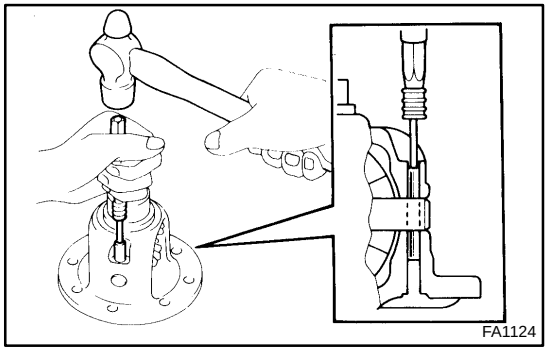

3. INSTALL STRAIGHT PIN AND STAKE DIFFERENTIAL CASE

(a) Using a pin punch and hammer, install the straight pin through the differential case and hole in the pinion shaft.

(b) Stake the differential case.

4. INSTALL RING GEAR ON DIFFERENTIAL CASE

(a) Clean the contact surfaces of the differential case and ring gear.

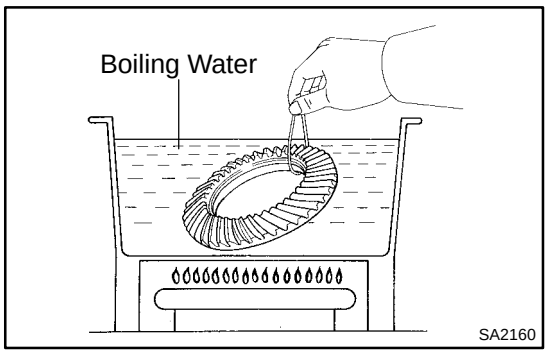

(b) Heat the ring gear to about 100˚C (212˚F) in boiling water.
(c) Carefully take the ring gear out of the boiling water.
(d) After the moisture on the ring gear has completely evaporated, quickly install the ring gear to the differential case.

HINT:
Align the matchmarks on the ring gear and differential case.

(e) Temporarily install 5 new lock plates and 10 bolts so that the bolt holes in the ring gear and differential case are aligned.
(f) After the ring gear has cooled sufficiently, torque the ring gear set bolts.
Torque: 97 N·m (985 kgf·cm, 71 ft·lbf)

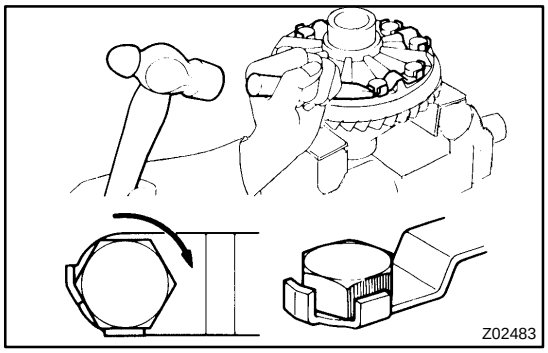

(g) Using a chisel and hammer, stake the 5 lock plates.

HINT:
Stake the claws of the lock plates to fix the bolts. For the claw contacting the protruding portion of the bolt, stake only the half of it along the tightening direction.

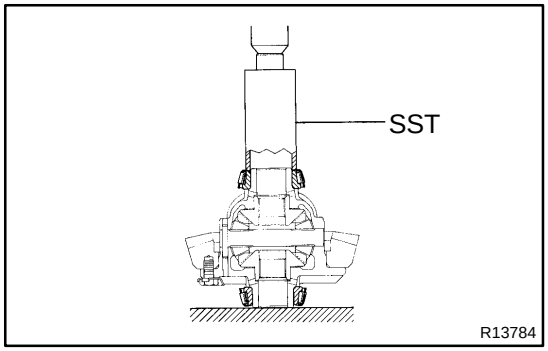

5. INSTALL SIDE BEARINGS

Using SST and a press, install the bearings into the differential case.

SST 09226–10010

6. INSTALL SIDE BEARING OUTER RACES

If replacing the side bearings, fit the thinnest new plate washers to each bearing outer race.
If reusing the bearings, fit the new washers with the same thickness as removed.

(a) Install a new plate washer to the side bearing retainer.
(b) Using SST and a press, install the bearing outer race.
SST 09950–60020 (09951–00790),
09950–70010 (09951–07150)
(c) Install a new plate washer to the differential carrier.

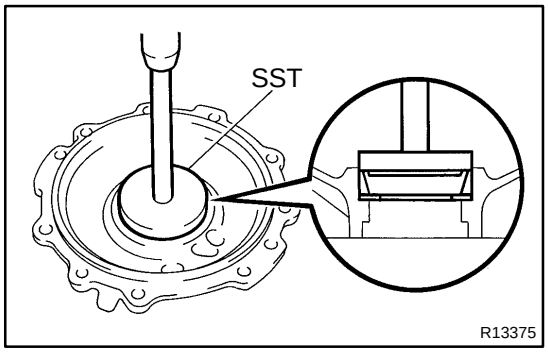

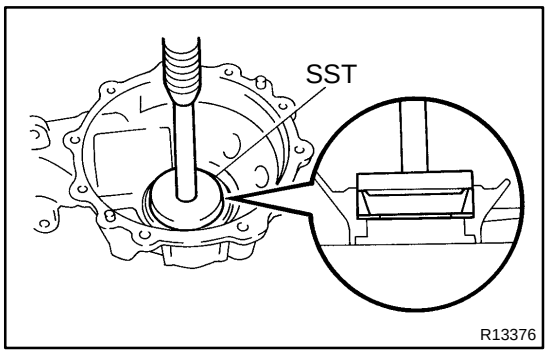

(d) Using SST and a press, install the bearing outer race.
SST 09950–60020 (09951–00790),
09950–70010 (09951–07150)

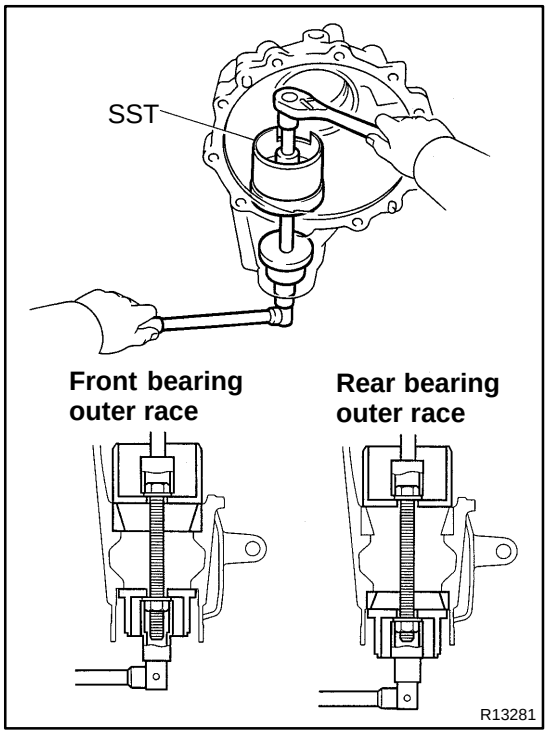

7. INSTALL DRIVE PINION FRONT AND REAR BEARING OUTER RACES

Using SST, install the 2 outer races.
SST 09570–22011

8. INSTALL DRIVE PINION FRONT BEARING

(a) Install the washer on the drive pinion.

HINT:

First fit a washer with the same thickness as the washer which was removed, then after checking the tooth contact pattern, replace the washer with one of a different thickness if necessary.

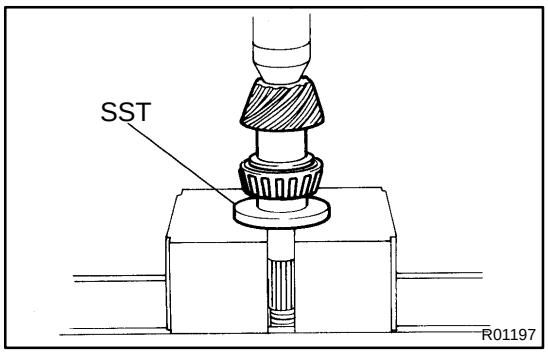

(b) Using SST and a press, install the front bearing onto the drive pinion.
SST 09506–30012

9. TEMPORARILY ADJUST DRIVE PINION PRELOAD

(a) Install the drive pinion, rear bearing and oil slinger.

HINT:

After adjusting the ring gear tooth contact pattern, assemble the spacer and oil seal.

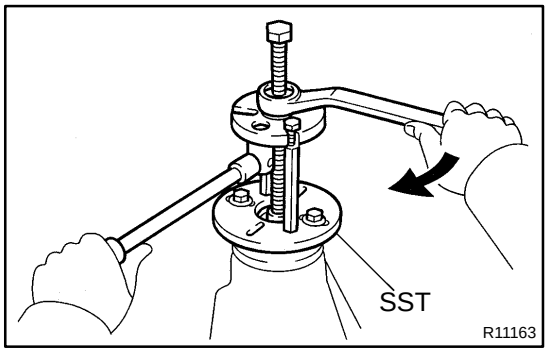

(b) Using SST, install the companion flange.
SST 09950–30012 (09951–03010, 09953–03010, 09954–03010, 09955–03030, 09956–03020)

(c) Coat the threads of the nut with hypoid gear oil.

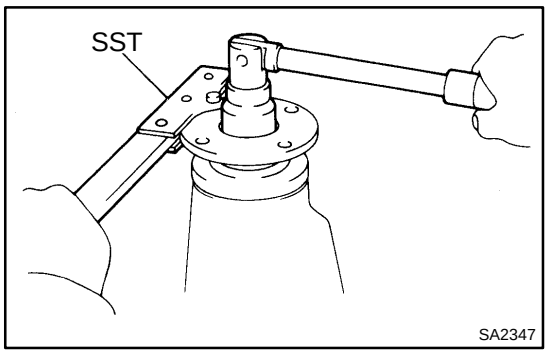

(d) Using SST to hold the flange, tighten the nut.

HINT:

Adjust the drive pinion preload by tightening the companion flange nut.

SST 09330–00021

NOTICE:

As there is no spacer, tighten the nut a little at a time and be careful not to overtighten it.

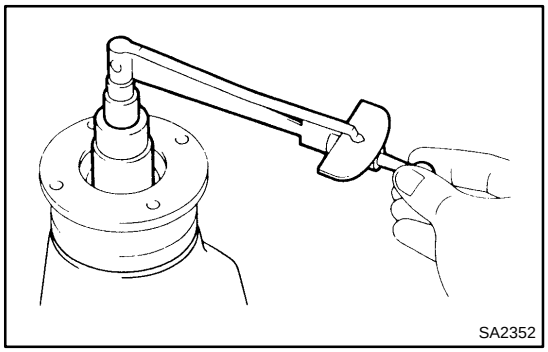

(e) Using a torque wrench, measure the preload of the drive pinion using the backlash between the drive pinion and ring gear.

Preload (at starting):

New bearing

1.2 – 1.9 N·m (12 – 19 kgf·cm, 10.4 – 16.5 in.·lbf)

Reused bearing

0.6 – 1.0 N·m (6 – 10 kgf·cm, 5.2 – 8.7 in.·lbf)

10. INSTALL DIFFERENTIAL CASE IN DIFFERENTIAL CARRIER

11. ADJUST RING GEAR BACKLASH

(a) Install the side bearing retainer with the 10 bolts.

Torque: 69 N·m (700 kgf·cm, 51 ft·lbf)

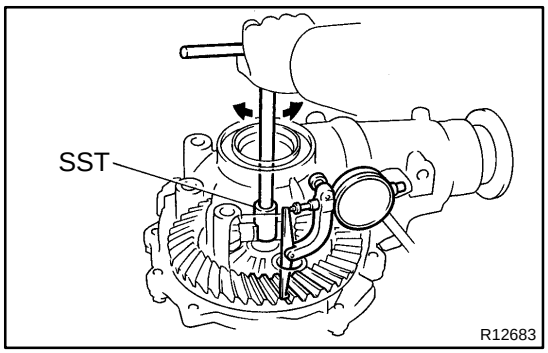

(b) Using SST and a dial indicator, measure the ring gear backlash.

SST 09564–32011

Backlash: 0.13 – 0.18 mm (0.0051 – 0.0071 in.)

If the backlash is not within the specified value, adjust it by either increasing or decreasing the thickness of plate washers on both sides by an equal amount.

HINT:

There should be no clearance between the plate washer and case. Ensure that there is ring gear backlash.

Washer thickness:

Thickness mm (in.)	Thickness mm (in.)	Thickness mm (in.)
2.00 – 2.02 (0.0787 – 0.0795)	2.27 – 2.29 (0.0894 – 0.0902)	2.54 – 2.56 (0.1000 – 0.1008)
2.03 – 2.05 (0.0799 – 0.0807)	2.30 – 2.32 (0.0906 – 0.0913)	2.57 – 2.59 (0.1012 – 0.1020)
2.06 – 2.08 (0.0811 – 0.0819)	2.33 – 2.35 (0.0917 – 0.0925)	2.60 – 2.62 (0.1024 – 0.1031)
2.09 – 2.11 (0.0823 – 0.0831)	2.36 – 2.38 (0.0929 – 0.0937)	2.63 – 2.65 (0.1035 – 0.1043)
2.12 – 2.14 (0.0835 – 0.0843)	2.39 – 2.41 (0.0941 – 0.0949)	2.66 – 2.68 (0.1047 – 0.1055)
2.15 – 2.17 (0.0846 – 0.0854)	2.42 – 2.44 (0.0953 – 0.0961)	2.69 – 2.71 (0.1059 – 0.1067)
2.18 – 2.20 (0.0858 – 0.0866)	2.45 – 2.47 (0.0965 – 0.0972)	2.72 – 2.74 (0.1071 – 0.1079)
2.21 – 2.23 (0.0870 – 0.0878)	2.48 – 2.50 (0.0976 – 0.0984)	2.75 – 2.77 (0.1083 – 0.1091)
2.24 – 2.26 (0.0882 – 0.0890)	2.51 – 2.53 (0.0988 – 0.0996)	2.78 – 2.80 (0.1094 – 0.1102)

12. MEASURE TOTAL PRELOAD

Using a torque wrench, measure the preload with the teeth of the drive pinion and ring gear in contact.

Total preload (at starting):

Drive pinion preload plus 0.4 – 0.6 N·m (4 – 6 kgf·cm, 3.5 – 5.2 in.·lbf)

13. INSPECT TOOTH CONTACT BETWEEN RING GEAR AND DRIVE PINION

(a) Remove the 10 bolts, side bearing retainer and differential case.

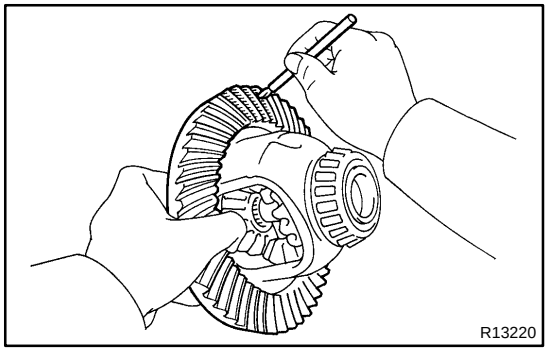

(b) Coat 3 or 4 teeth at three different positions on the ring gear with red lead primer.

(c) Install the differential case and side bearing retainer with the 10 bolts.

Torque: 69 N·m (700 kgf·cm, 51 ft·lbf)

(d) Hold the companion flange firmly and rotate the ring gear in both directions.

(e) Remove the 10 bolts, side bearing retainer and differential case.

(f) Inspect the tooth contact pattern.

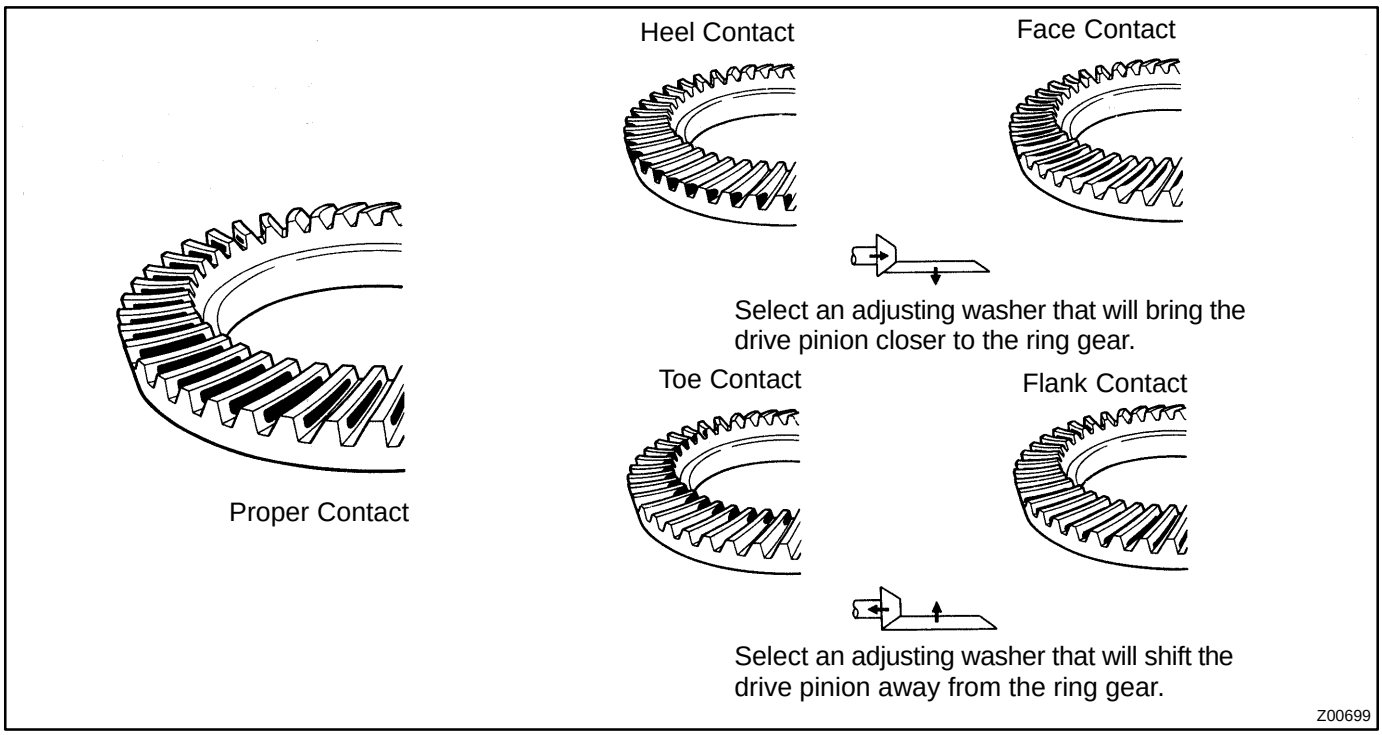

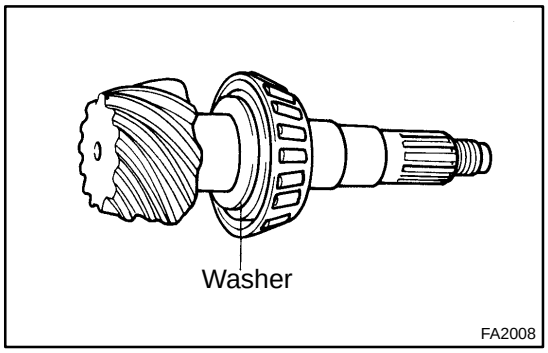

If the teeth are not contacting properly, use the following table to select a proper washer for correction.

Washer thickness:

Thickness mm (in.)	Thickness mm (in.)	Thickness mm (in.)
1.69 – 1.71 (0.0665 – 0.0673)	1.93 – 1.95 (0.0760 – 0.0768)	2.17 – 2.19 (0.0854 – 0.0862)
1.72 – 1.74 (0.0677 – 0.0685)	1.96 – 1.98 (0.0772 – 0.0780)	2.20 – 2.22 (0.0866 – 0.0874)
1.75 – 1.77 (0.0689 – 0.0697)	1.99 – 2.01 (0.0783 – 0.0791)	2.23 – 2.25 (0.0878 – 0.0886)
1.78 – 1.80 (0.0701 – 0.0709)	2.02 – 2.04 (0.0795 – 0.0803)	2.26 – 2.28 (0.0890 – 0.0898)
1.81 – 1.83 (0.0713 – 0.0720)	2.05 – 2.07 (0.0807 – 0.0815)	2.29 – 2.31 (0.0902 – 0.0909)
1.84 – 1.86 (0.0724 – 0.0732)	2.08 – 2.10 (0.0819 – 0.0827)	2.32 – 2.34 (0.0913 – 0.0921)
1.87 – 1.89 (0.0736 – 0.0744)	2.11 – 2.13 (0.0831 – 0.0839)	–
1.90 – 1.92 (0.0748 – 0.0756)	2.14 – 2.16 (0.0843 – 0.0850)	–

14. REMOVE COMPANION FLANGE AND OIL SLINGER (See page SA–31)

15. REMOVE REAR BEARING (See page SA–31)

16. INSTALL NEW BEARING SPACER, REAR BEARING AND OIL SLINGER

(a) Install a new bearing spacer and place the rear bearing and oil slinger.

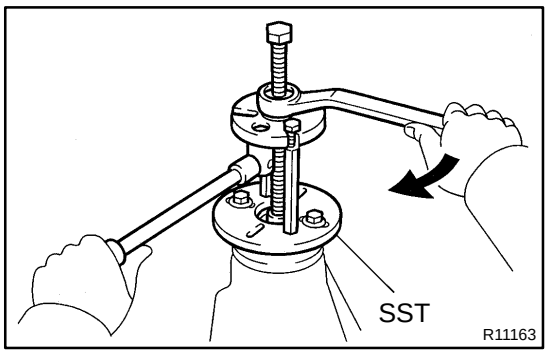

(b) Using SST and the companion flange, install the rear bearing, then remove the companion flange.
SST 09950–30012 (09951–03010, 09953–03010, 09954–03010, 09955–03030, 09956–03020)

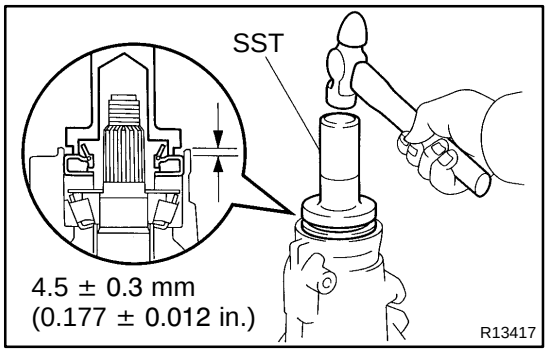

17. INSTALL OIL SEAL

(a) Using SST and a hammer, install a new oil seal.
SST 09554–22010
Oil seal drive in depth: 4.5 ± 0.3 mm (0.177 ± 0.012 in.)

(b) Coat the oil seal lip with MP grease.

18. INSTALL COMPANION FLANGE

(a) Place the companion flange on the drive pinion.

(b) Coat the threads of a new nut with hypoid gear oil.

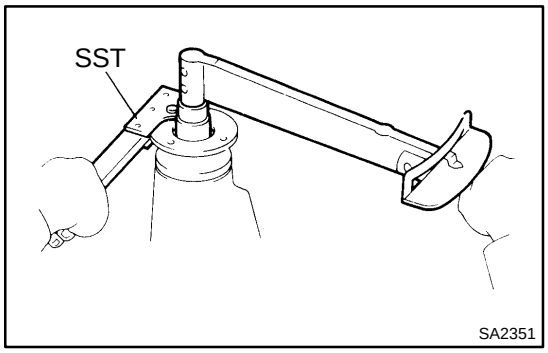

(c) Using SST to hold the flange, torque the nut.
SST 09330–00021
Torque: 108 N·m (1,100 kgf·cm, 80 ft·lbf)

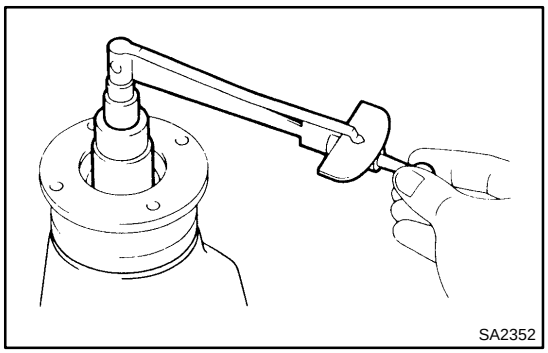

19. ADJUST DRIVE PINION PRELOAD

Using a torque wrench, measure the preload of the drive pinion using the backlash between the drive pinion and the ring gear.

Preload (at starting):
New bearing
1.2 – 1.9 N·m (12 – 19 kgf·cm, 10.4 – 16.5 in.·lbf)
Reused bearing
0.6 – 1.0 N·m (6 – 10 kgf·cm, 5.2 – 8.7 in.·lbf)

If the preload is greater than the specified value, replace the bearing spacer.

If the preload is less than the specified value, retighten the nut with 13 N·m (130 kgf·cm, 9 ft·lbf) of torque at a time until the specified preload is reached.

Torque: 223 N·m (2,275 kgf·cm, 165 ft·lbf) or less

If the maximum torque is exceeded while retightening the nut, replace the bearing spacer and repeat the preload adjusting procedure. Do not loosen the nut to reduce the preload.

20. INSTALL DIFFERENTIAL CASE

21. INSTALL SIDE BEARING RETAINER

(a) Remove any old FIPG material and be careful not to drop oil on the contact surfaces of the differential carrier and side bearing retainer.

(b) Clean both installation surfaces of loose FIPG and oil material with gasoline or alcohol.

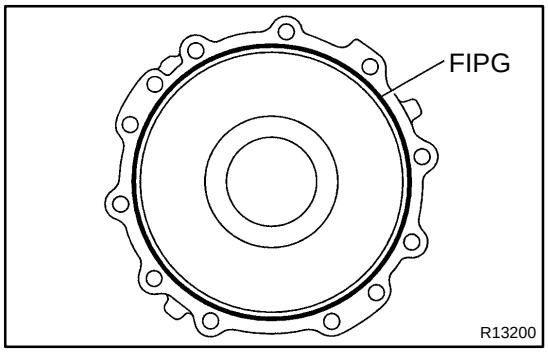

(c) Apply FIPG to the side bearing retainer, as shown in the illustration.

FIPG:

Part No. 08826–00090, THREE BOND 1281 or equivalent

HINT:

Install the side bearing retainer within 10 minutes after applying FIPG.

(d) Install the side bearing retainer with the 10 bolts.

Torque: 69 N·m (700 kgf·cm, 51 ft·lbf)

22. CHECK TOTAL PRELOAD (See step 12.)

23. RECHECK RING GEAR BACKLASH

(See page SA–31)

24. RECHECK TOOTH CONTACT BETWEEN RING GEAR AND DRIVE PINION (See step 13.)

25. CHECK COMPANION FLANGE RUNOUT (See page SA–31)

26. STAKE DRIVE PINION NUT

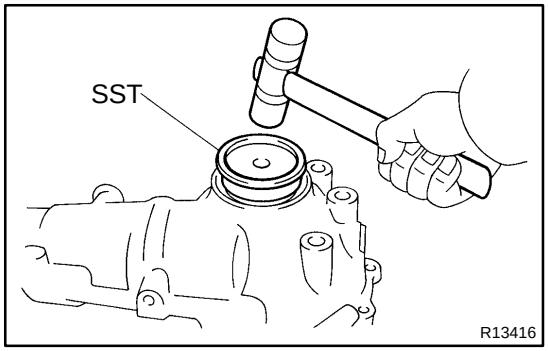

27. INSTALL SIDE OIL SEAL

(a) Using SST and a plastic hammer, install a new oil seal until its surface is flush with the differential carrier end.

SST 09608–32010

(b) Coat the oil seal lip with MP grease.

28. INSTALL INTERMEDIATE SHAFT NO. 1

(a) Install a new snap ring to the shaft.

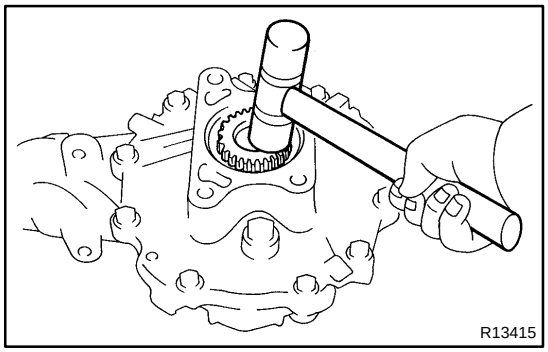

(b) Using a plastic hammer, install the shaft to the differential case.

(c) Check that there is 2 – 3 mm (0.08 – 0.12 in.) of play in the axial direction.

(d) Check that the intermediate shaft will not come out by trying to pull it completely out by hand.

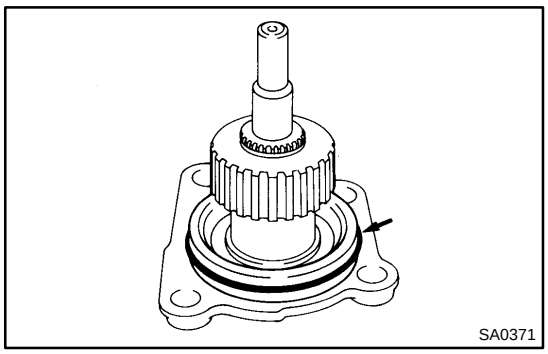
SA0371

29. INSTALL CLUTCH CASE TO DIFFERENTIAL TUBE

(a) Install a new O–ring to the tube.

(b) Coat the O–ring with MP grease.

(c) Install the clutch case to the tube.

(d) Using a torx socket (E14), torque the 2 torx bolts.
Torque: 78 N·m (800 kgf·cm, 58 ft·lbf)

30. INSTALL CLUTCH SLEEVE

31. INSTALL DIFFERENTIAL TUBE TO DIFFERENTIAL

(a) Remove any old FIPG material and be careful not to drop oil on the contact surfaces of the differential and clutch case.

(b) Clean both installation surfaces of loose FIPG and oil material with gasoline or alcohol.

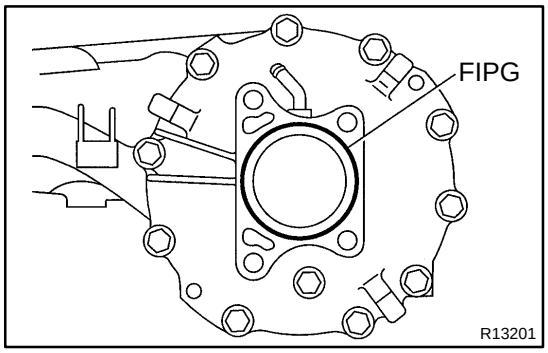

R13201

(c) Apply FIPG to the differential, as shown in the illustration.
FIPG:
Part No. 08826–00090, THREE BOND 1281 or equivalent

HINT:
Install the differential tube within 10 minutes after applying FIPG.

(d) Install the differential tube to the differential.

(e) Clean the threads of the 2 long torx bolts and retainer bolt holes with toluene or trichlorethylene.

(f) Apply adhesive to 2 or 3 threads of the long bolts end.
Adhesive:
Part No. 08833–00070, THREE BOND 1324 or equivalent

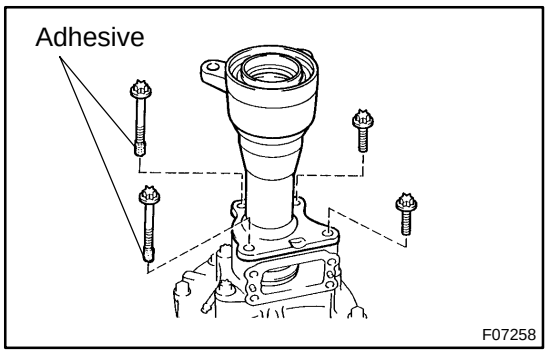

F07258

(g) Using torx socket (E14), torque the 4 torx bolts.
Torque: 78 N·m (800 kgf·cm, 58 ft·lbf)

32. INSTALL A.D.D. ACTUATOR

(a) Remove any old FIPG material and be careful not to drop oil on the contact surfaces of the actuator and clutch case.

(b) Clean both installation surfaces of loose FIPG and oil material with gasoline or alcohol.

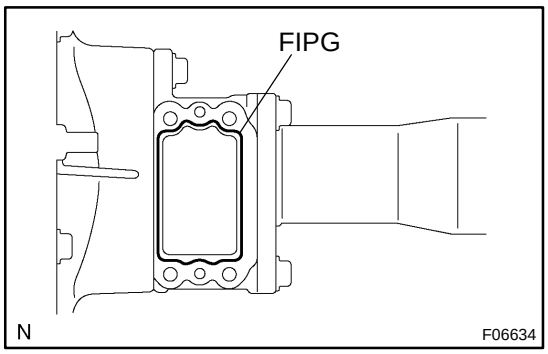

(c) Apply FIPG to the clutch case, as shown in the illustration.
FIPG:
Part No. 08826–00090, THREE BOND 1281 or equivalent

HINT:

Install the actuator within 10 minutes after applying FIPG.

(d) Install the A.D.D. actuator with the 4 bolts.
Torque: 21 N·m (210 kgf·cm, 15 ft·lbf)

SA09S–03

INSTALLATION

1. INSTALL DIFFERENTIAL MOUNTING CUSHIONS

(a) Install the 2 front mounting cushions with the 5 bolts.
Torque: 157 N·m (1,600 kgf·cm, 116 ft·lbf)

(b) Install the rear mounting cushion with the 2 bolts.
Torque: 108 N·m (1,100 kgf·cm, 80 ft·lbf)

2. INSTALL FRONT DIFFERENTIAL CARRIER

(a) Jack up the front differential.

(b) Install the 2 front mounting bolts.
Torque: 137 N·m (1,400 kgf·cm, 101 ft·lbf)

(c) Using a hexagon (12 mm) wrench, install the rear mounting nut.
Torque: 87 N·m (890 kgf·cm, 64 ft·lbf)

(d) Remove the jack.

3. INSTALL TUBE WITH WIRE HARNESS ASSEMBLY

(a) Install tube with wire harness assembly with the bolt.
Torque: 13 N·m (130 kgf·cm, 9 ft·lbf)

(b) Connect the actuator connector, vacuum hose and breather hose.

4. CONNECT FRONT PROPELLER SHAFT (See page PR–15)

5. INSTALL DRIVE SHAFTS (See page SA–24)

6. FILL DIFFERENTIAL WITH HYPOID GEAR OIL (See page SA–26)

A.D.D. CONTROL SYSTEM

LOCATION

SA0BF–04

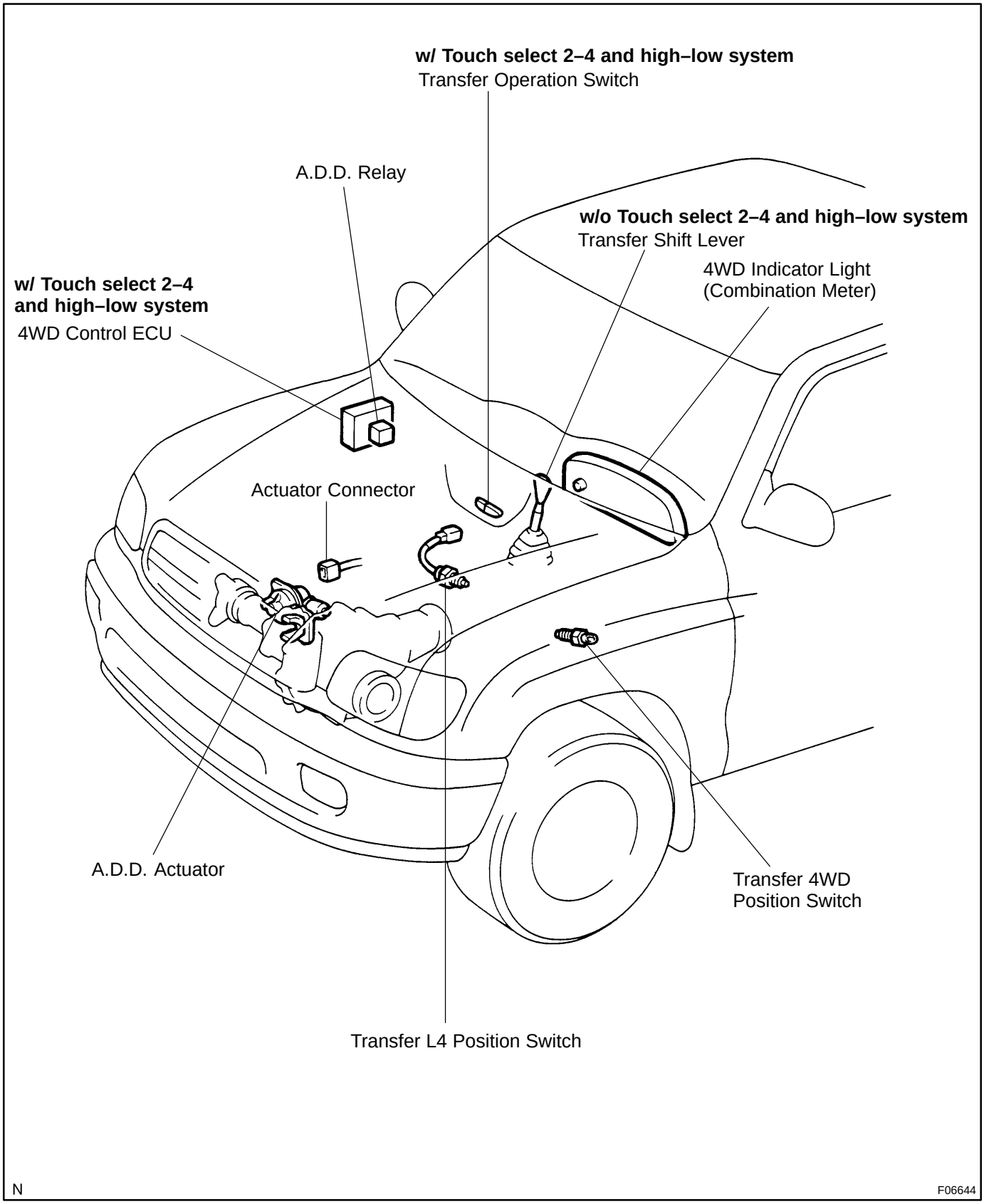

SA1KN–02

INSPECTION

1. INSPECT A.D.D. ACTUATOR

(a) Disconnect the actuator connector.

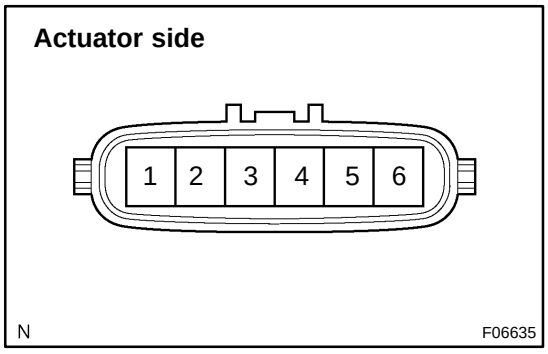

(b) Measure the resistance between the terminals 2 and 6.
Standard resistance: 0.3 – 100 Ω

(c) Measure the resistance between the terminals 2 or 6 and body ground.
Standard resistance: More than 0.5 MΩ

If the resistance value is not as specified, replace the actuator assembly.

2. INSPECT A.D.D. ACTUATOR OPERATION

Apply battery positive voltage between the terminal 2 or 6, and check the actuator operation by sound, A.D.D. status and continuity between the terminal 3 and 4.

Battery voltage applied terminal	3–4 terminals continuity	A.D.D. status
2 (+) – 6 (–)	Continuity	Connected
2 (–) – 6 (+)	No continuity	Disconnected

If the operation is not as specified, replace the actuator assembly.

3. INSPECT LIMIT SWITCH CONTINUITY

(a) Connect the actuator connector.

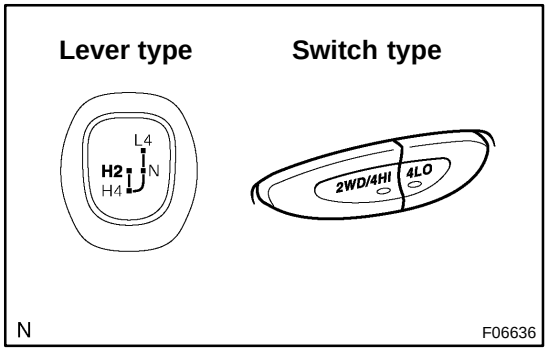

(b) Shift the transfer shift lever or switch the transfer operation switch to ”H2” position.

(c) Check the A.D.D. actuator operation by sound.

(d) Disconnect the actuator connector.

(e) Check the continuity between each terminal, as shown in the chart.

Tester connected terminal number	Specified condition
1 – 3	No continuity
1 – 4	No continuity
3 – 5	Continuity
4 – 5	No continuity

(f) Connect the actuator connector.

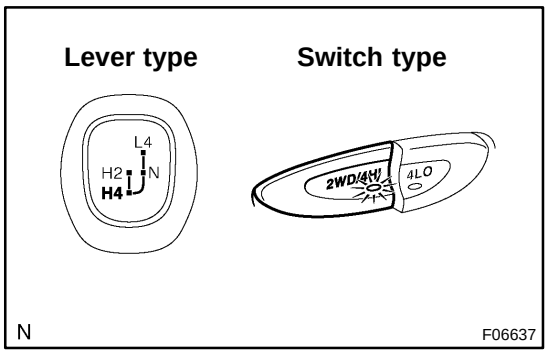

(g) Shift the transfer shift lever or switch the transfer operation switch to "H4" position.
(h) Check the A.D.D. actuator operation by sound.
(i) Disconnect the actuator connector.
(j) Check the continuity between each terminal, as shown in the chart.

Tester connected terminal number	Specified condition
1 – 3	Continuity
1 – 4	No continuity
3 – 5	No continuity
4 – 5	No continuity

(k) Connect the actuator connector.

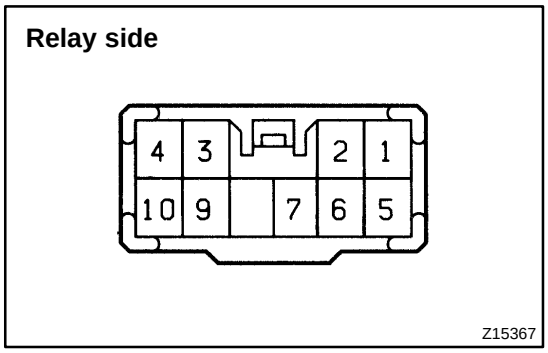

4. INSPECT A.D.D. RELAY

(a) Check the continuity between each terminal, as shown in the chart.

Tester connected terminal number	Specified condition
1 – 2	Continuity
2 – 4	Continuity
6 – 7	*

*: There is a diode between the terminals 6 and 7. If no continuity exists, check that continuity exists when changing the position of < probe for the position of negative > probe of tester.

(b) Apply battery positive voltage between each terminal and check the continuity between each terminal, as shown in the chart.

Battery voltage applied terminal	Tester connected terminal number	Specified condition
6 (+) – 5 (–)	1 – 3 1 – 2	Continuity No continuity
7 (+) – 2 (–)	9 – 10	No continuity
9 (+) – 10 (–)	3 – 4 2 – 4	Continuity No continuity

If continuity is not as specified, replace the relay.

5. INSPECT TRANSFER 4WD POSITION SWITCH (See page TR–10 or TR–15)

6. REMOVE A.D.D. ACTUATOR (See page SA–31)

7. INSPECT CLUTCH HUB AND CLUTCH SLEEVE

(a) Check the clutch hub and clutch sleeve for wear and damage.

If necessary, replace them.

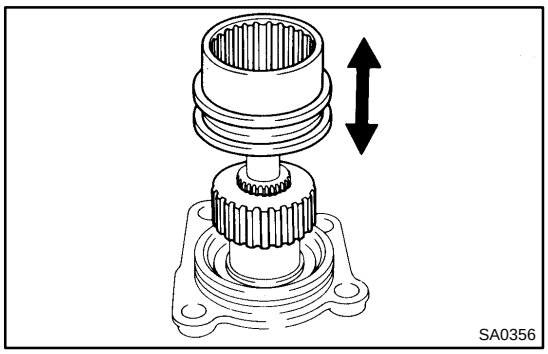

(b) Check that clutch sleeve slides smoothly on the clutch hub.

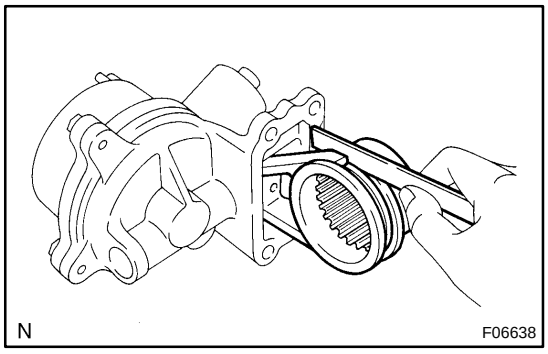

8. MEASURE SLEEVE FORK AND CLUTCH SLEEVE CLEARANCE

Using a feeler gauge, measure the clearance between the sleeve fork and clutch sleeve.

Maximum clearance: 0.35 mm (0.0138 in.)

If the clearance exceeds the maximum, replace the fork or sleeve.

FRONT SHOCK ABSORBER

SA09Z–04

COMPONENTS

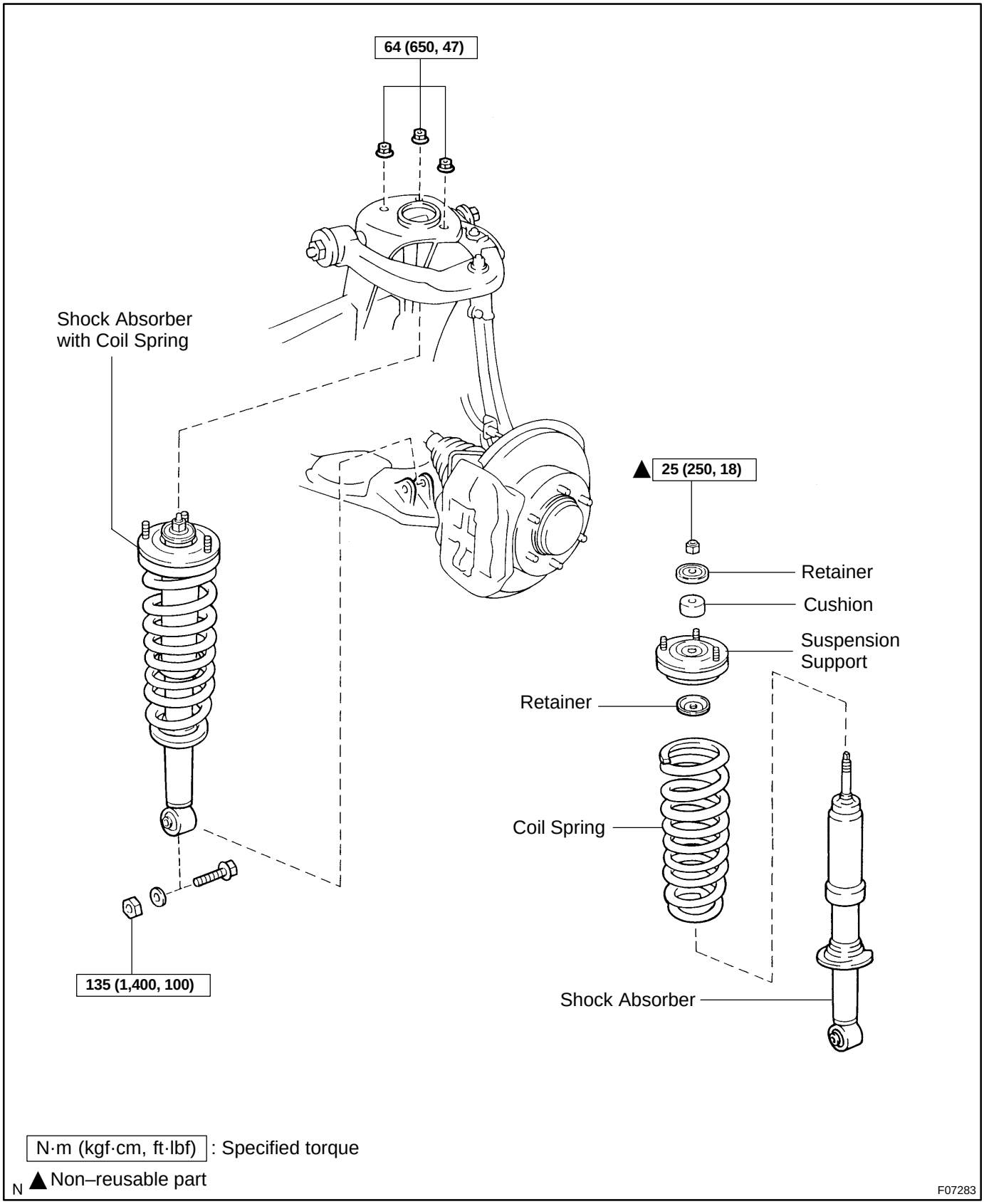

SA0A0–03

REMOVAL

1. REMOVE FRONT WHEEL

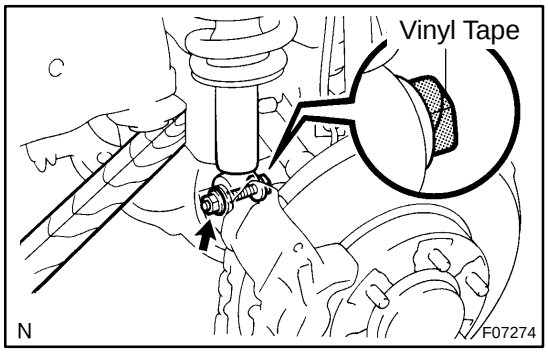

2. DISCONNECT SHOCK ABSORBER FROM LOWER SUSPENSION ARM

(a) Remove the shock absorber lower side set nut and washer.

NOTICE:

Do not remove the bolt.

(b) Wrap the bolt's head with vinyl tape to prevent the drive shaft boot from being damaged.

(c) Pry down the lower suspension arm to remove the bolt and disconnect the shock absorber.

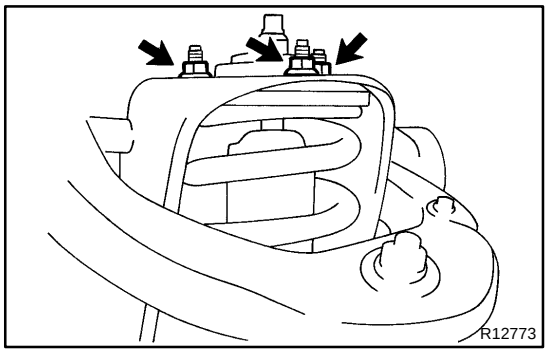

3. REMOVE SHOCK ABSORBER WITH COIL SPRING

Remove the 3 nuts and shock absorber with the coil spring.

SA0A1–03

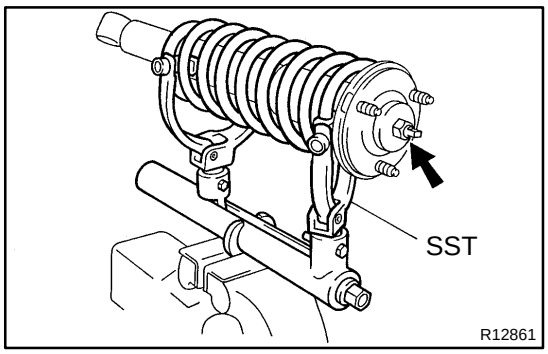

DISASSEMBLY

REMOVE SUSPENSION SUPPORT AND COIL SPRING

(a) Using SST, compress the coil spring.
SST 09727–30021 (09727–00010, 09727–00021, 09727–00031)

NOTICE:

- **Make sure that the suspension support is free from the coil spring.**
- **Do not compress the coil spring more than necessary.**
- **Do not use an impact wrench. It will damage the SST.**
- **Do not make your position at the top side of the shock absorber.**

(b) Remove the suspension support center nut.

(c) Remove the 2 retainers, cushion, suspension support and coil spring.

SA0A2–03

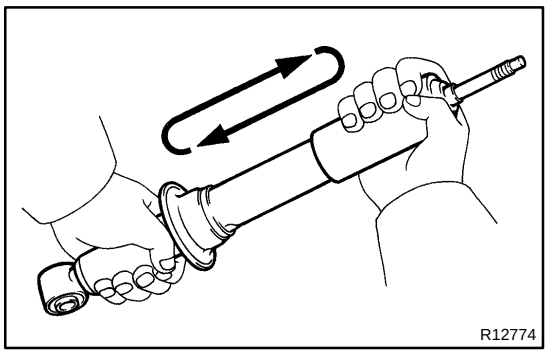

INSPECTION

INSPECT SHOCK ABSORBER

Compress and extend the shock absorber rod and check that there is no abnormal resistance or unusual operation sounds. If there is any abnormality, replace the shock absorber with a new one.

NOTICE:

When discarding the shock absorber, see DISPOSAL on page SA–57.

SA0A3–03

DISPOSAL

1. FULLY EXTEND SHOCK ABSORBER ROD

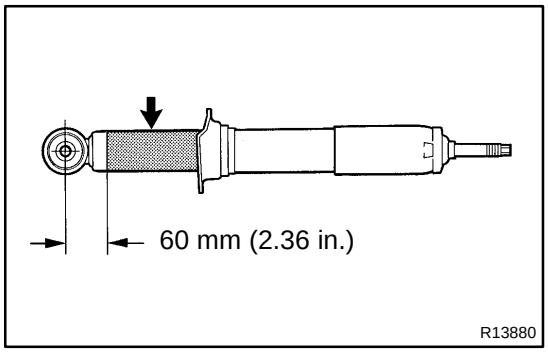

2. DRILL HOLE TO DISCHARGE GAS FROM CYLINDER

Using a drill, make a hole in the cylinder as shown in the illustration to discharge the gas inside.

CAUTION:

The discharged gas is harmless, but be careful of chips which may fly up when drilling.

SA0A5–04

REASSEMBLY

1. INSTALL COIL SPRING TO SHOCK ABSORBER

(a) Using SST, compress the coil spring.
SST 09727–30021 (09727–00010, 09727–00021, 09727–00031)

NOTICE:

- **Do not compress the coil spring more than necessary.**
- **Do not use an impact wrench. It will damage the SST.**

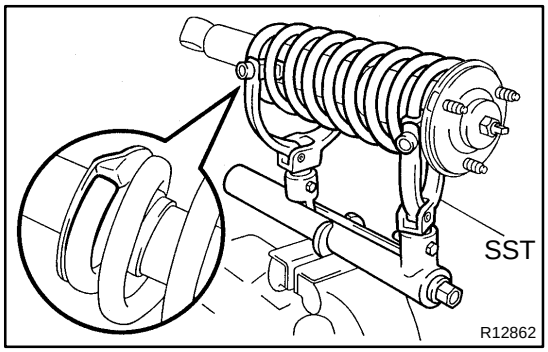

(b) Install the coil spring to the shock absorber.

HINT:

Fit the lower end of the coil spring into the gap of the spring seat of the shock absorber.

2. INSTALL SUSPENSION SUPPORT

(a) Install the cushion, 2 retainers and suspension support to the piston rod.

(b) Temporarily tighten a new suspension support center nut.

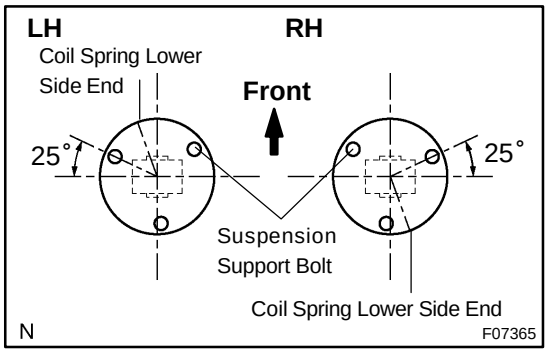

(c) Position the suspension support as shown in the illustration.

(d) Remove the SST.
SST 09727–30021 (09727–00010, 09727–00021, 09727–00031)

NOTICE:

Do not make your position at the top side of the shock absorber.

HINT:

After removing the SST, recheck the direction of the suspension support.

(e) Torque the suspension center nut.
Torque: 25 N·m (250 kgf·cm, 18 ft·lbf)

SA0A6–03

INSTALLATION

1. INSTALL SHOCK ABSORBER WITH COIL SPRING

(a) Install the upper side of shock absorber to the chassis frame with the 3 nuts.
Torque: 64 N·m (650 kgf·cm, 47 ft·lbf)

(b) Connect the lower side of shock absorber to the lower suspension arm with bolt, washer and nut.
Torque: 135 N·m (1,400 kgf·cm, 100 ft·lbf)

2. INSTALL FRONT WHEEL
Torque: 110 N·m (1,150 kgf·cm, 83 ft·lbf)

FRONT UPPER SUSPENSION ARM

SA0AC–05

COMPONENTS

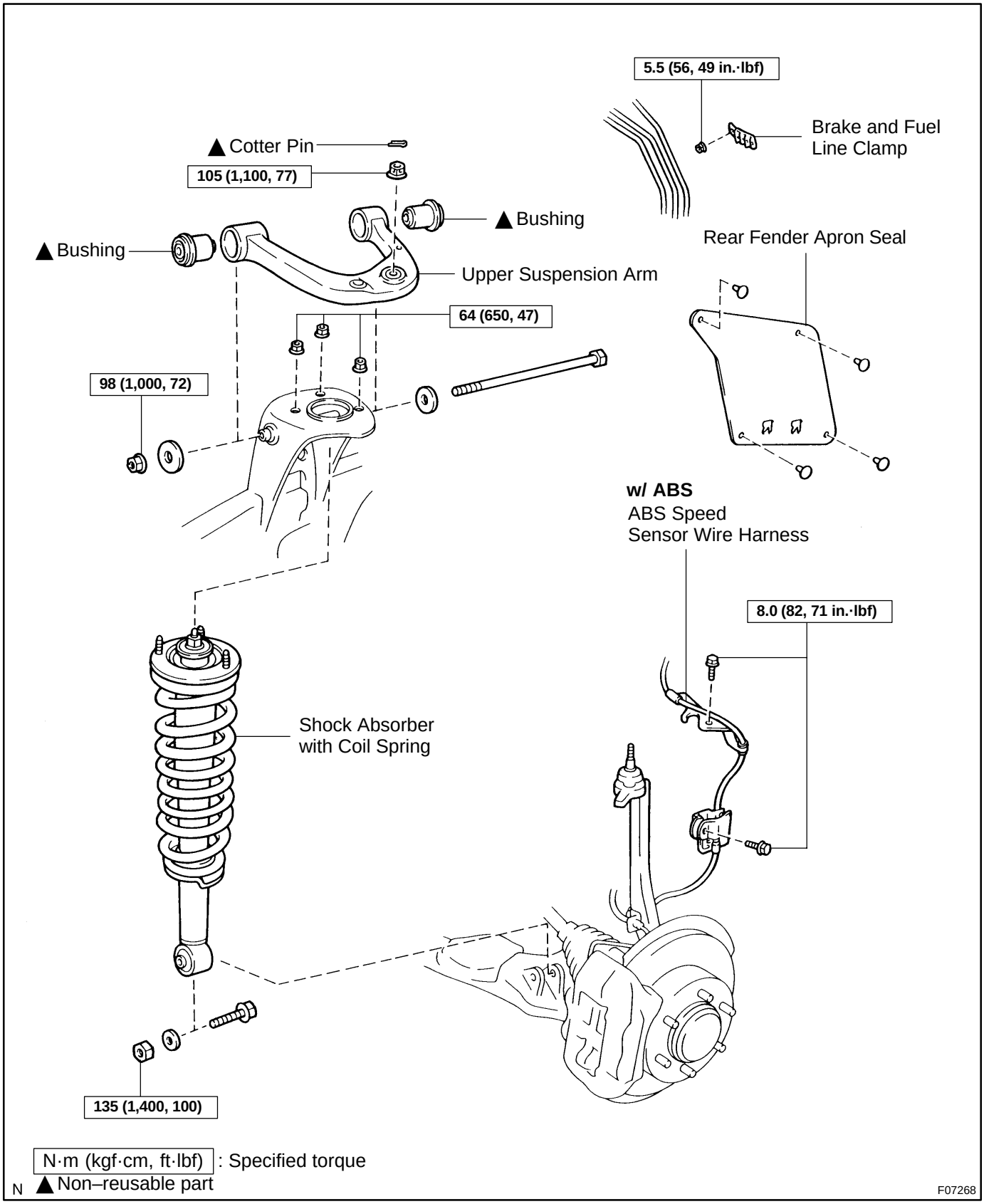

SA1K6–02

REMOVAL

1. REMOVE SHOCK ABSORBER WITH COIL SPRING
(See page SA–54)

2. w/ ABS:
DISCONNECT ABS SPEED SENSOR WIRE HARNESS CLAMPS

Remove the 2 bolts and ABS speed sensor wire harness clamps from the steering knuckle and upper suspension arm.

3. DISCONNECT UPPER BALL JOINT

(a) Remove the cotter pin and loosen the nut.

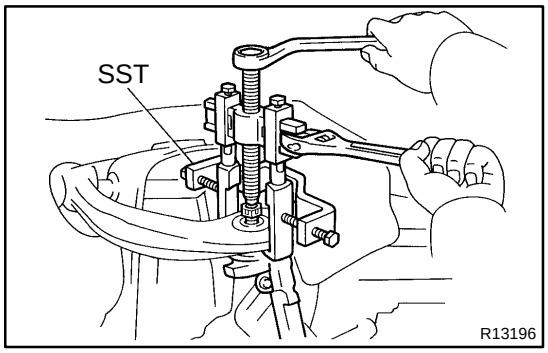

(b) Using SST, disconnect the upper ball joint.
SST 09950–40011 (09951–04010, 09952–04010, 09953–04020, 09954–04010, 09955–04031, 09958–04011)

(c) Support the steering knuckle securely.

(d) Remove the nut.

4. REMOVE REAR FENDER APRON SEAL

Remove the 4 clips and rear fender apron seal.

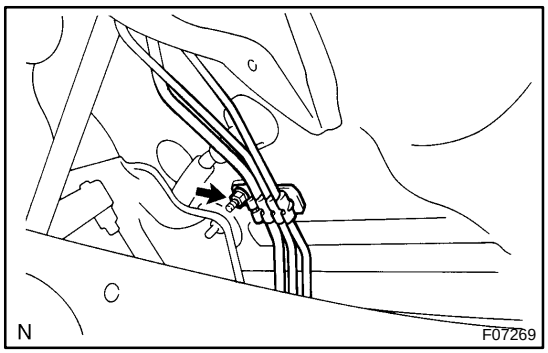

5. REMOVE BRAKE AND FUEL LINE CLAMP

Disengage the 2 brake lines and fuel line, and remove the nut and brake line clamp.

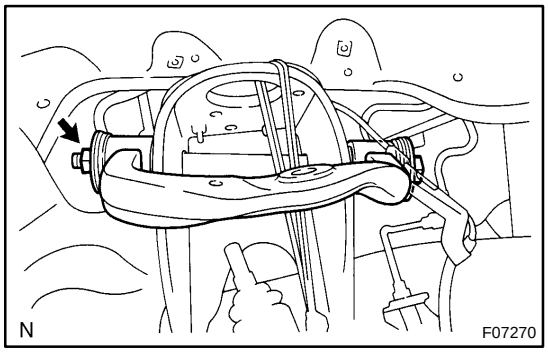

6. REMOVE UPPER SUSPENSION ARM

Remove the nut, bolt, 2 washers and upper suspension arm.

SA05Q–02

REPLACEMENT

1. REMOVE BUSHING

(a) Using a chisel and hammer, pry up the flange of the bushing.

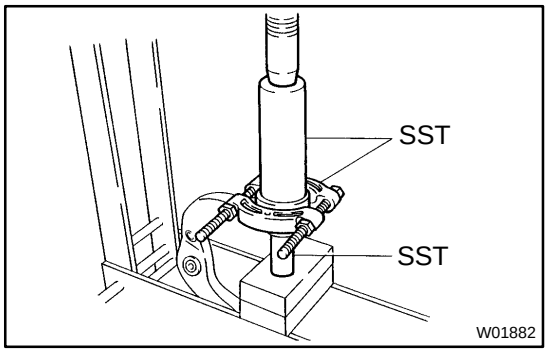

(b) Using SST and a press, remove the bushing.
SST 09613–26010, 09631–20060, 09950–00020

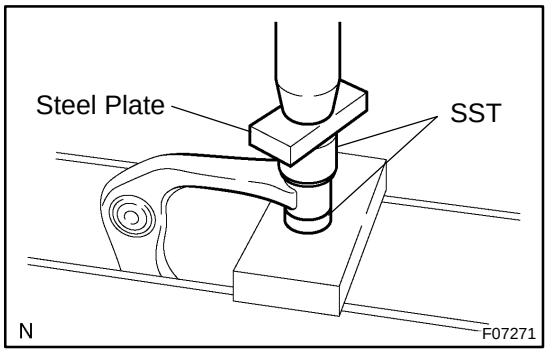

2. INSTALL NEW BUSHING

Using SST, a press and steel plate, install a new bushing.
SST 09631–12090, 09710–30021 (09710–03051)

SA0AE–04

INSTALLATION

1. INSTALL UPPER SUSPENSION ARM

Install the upper suspension arm with 2 washers, bolt and nut.

Torque: 98 N·m (1,000 kgf·cm, 72 ft·lbf)

HINT:

After stabilizing the suspension, torque the nut.

2. INSTALL BRAKE AND FUEL LINE CLAMP

Torque: 5.5 N·m (56 kgf·cm, 49 in.·lbf)

3. INSTALL REAR FENDER APRON SEAL

4. CONNECT UPPER BALL JOINT

(a) Connect the upper ball joint to the upper suspension arm.

(b) Install the nut and a new cotter pin.

If the holes for the cotter pin are not aligned, tighten the nut further up to 60°.

Torque: 105 N·m (1,100 kgf·cm, 77 ft·lbf)

5. w/ ABS:

CONNECT ABS SPEED SENSOR WIRE HARNESS CLAMPS.

Torque: 8.0 N·m (82 kgf·cm, 71 in.·lbf)

6. INSTALL SHOCK ABSORBER WITH COIL SPRING (See page SA–59)

7. CHECK FRONT WHEEL ALIGNMENT (See page SA–5)

FRONT LOWER SUSPENSION ARM

SA0AJ–05

COMPONENTS

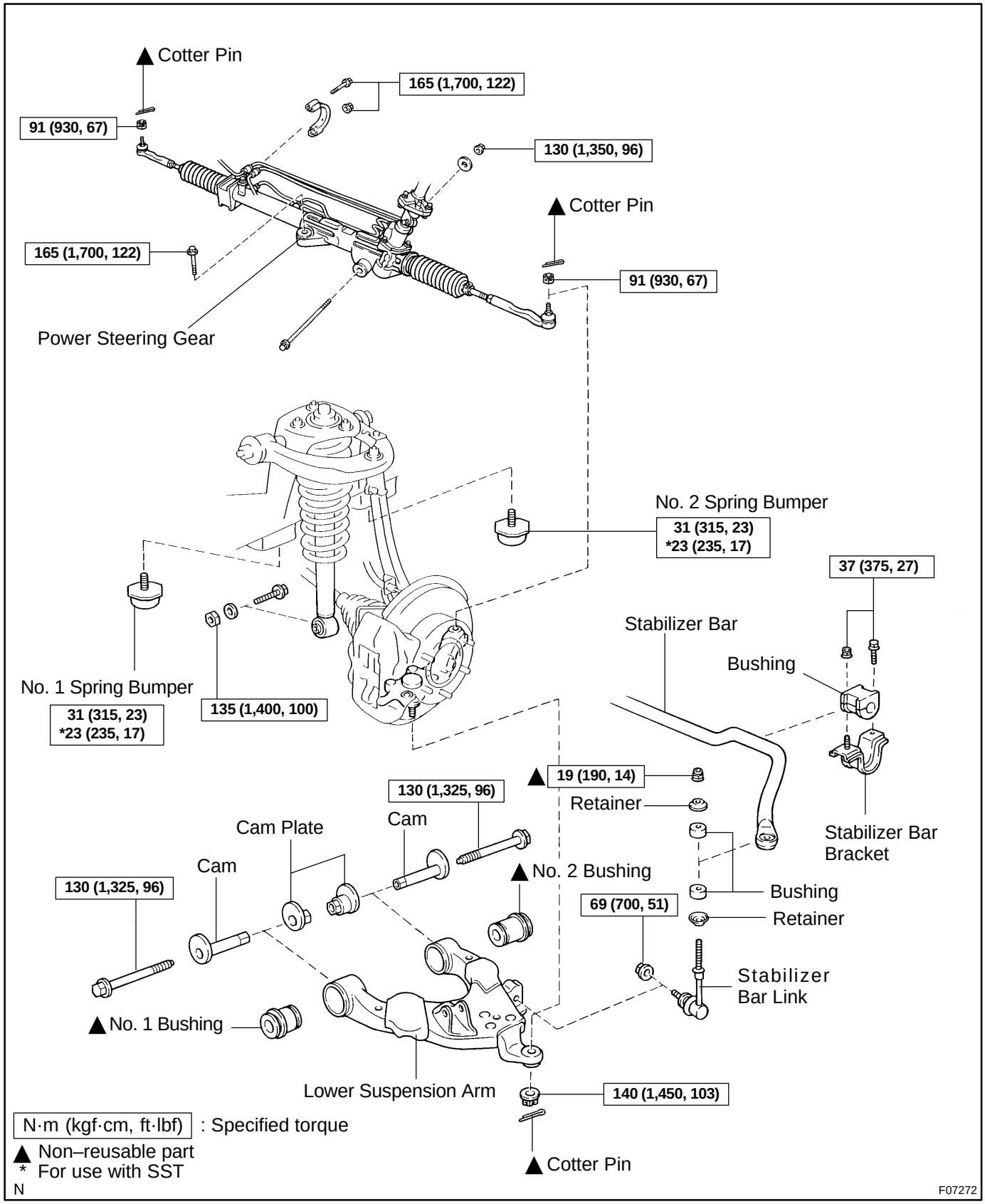

SA1KI–01

REMOVAL

1. REMOVE RH AND LH FRONT WHEELS

2. DISCONNECT RH AND LH TIE ROD ENDS

(a) Remove the cotter pin and nut.

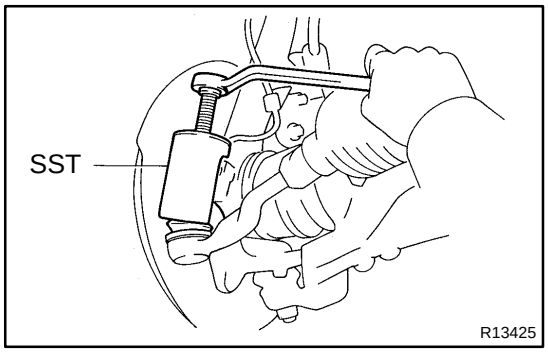

(b) Using SST, disconnect the tie rod end from the lower ball joint.
SST 09610–20012

(c) Employ the same manner described above to the other side.

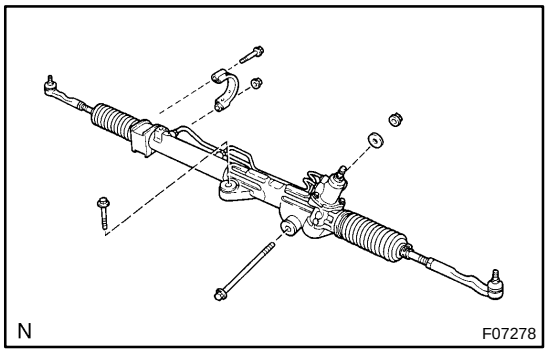

3. REMOVE POWER STEERING GEAR SET BOLTS AND NUTS

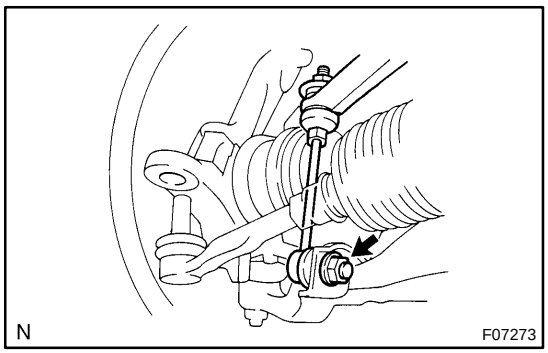

4. DISCONNECT STABILIZER BAR LINK FROM LOWER SUSPENSION ARM

Remove the nut and disconnect the stabilizer bar link from the lower suspension arm.

HINT:

If the ball joint turns together with nut, use a hexagon (6 mm) wrench to hold the stud.

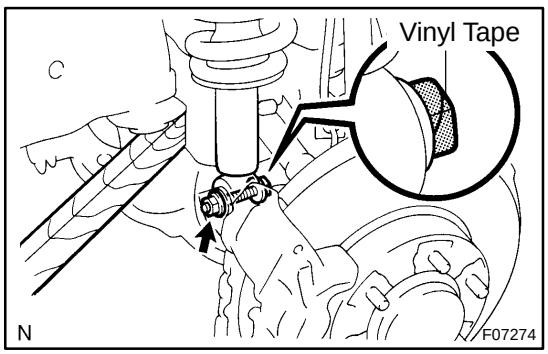

5. DISCONNECT SHOCK ABSORBER FROM LOWER SUSPENSION ARM

(a) Remove the shock absorber lower side set nut and washer.

NOTICE:

Do not remove the bolt.

(b) Wrap the bolt's head with vinyl tape to prevent the drive shaft boot from being damaged.

(c) Pry down the lower suspension arm to remove the bolt and disconnect the shock absorber.

6. DISCONNECT LOWER BALL JOINT FROM LOWER SUSPENSION ARM

(a) Remove the cotter pin and nut.

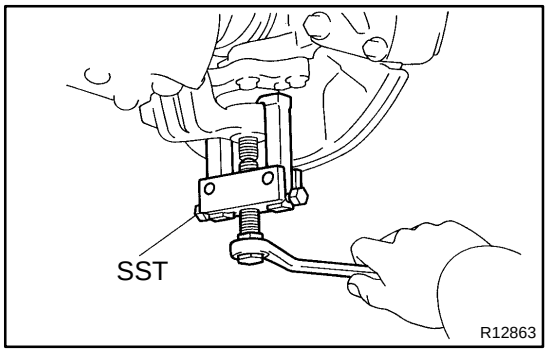

(b) Using SST, disconnect the lower ball joint from the lower suspension arm.
SST 09628–62011

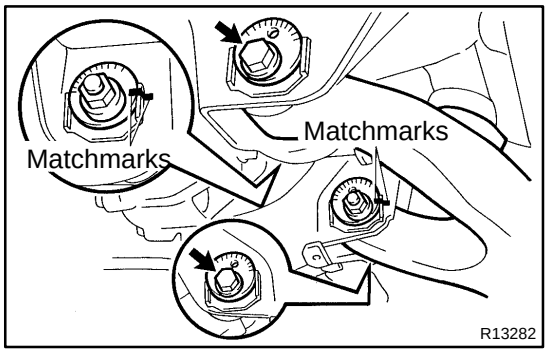

7. REMOVE LOWER SUSPENSION ARM

(a) Place matchmarks on the front and rear cam plates and chassis frame.

(b) Remove the 2 cam plates, bolts, cams and lower suspension arm while slightly shifting the power steering gear rearward.

NOTICE:
Do not damage the power steering gear tubes.

SA1KJ–02

REPLACEMENT

1. REPLACE BUSHING

(a) Using a chisel and hammer, pry up the flange of the bushing.

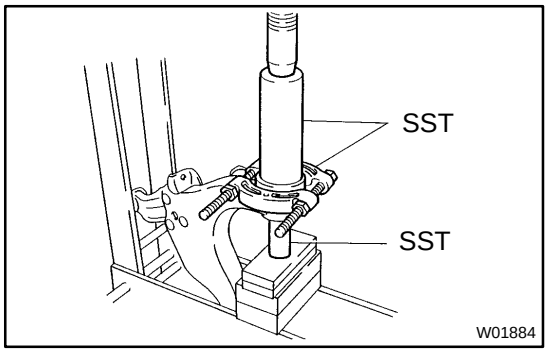

(b) Using SST and a press, remove the bushing.
SST 09613–26010, 09632–36010, 09950–00020

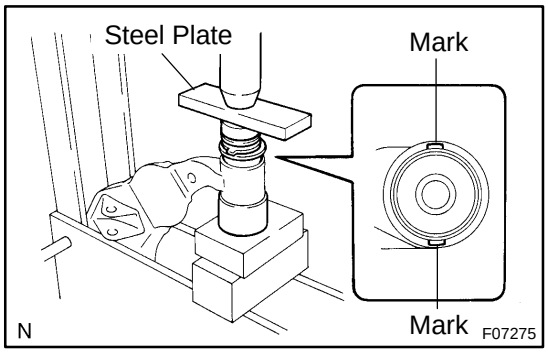

(c) Using SST, a press and steel plate, install a new No. 1 bushing.
SST 09502–12010, 09631–12090

HINT:
Before installing the bushing, set it in the correct direction, as shown in the illustration.

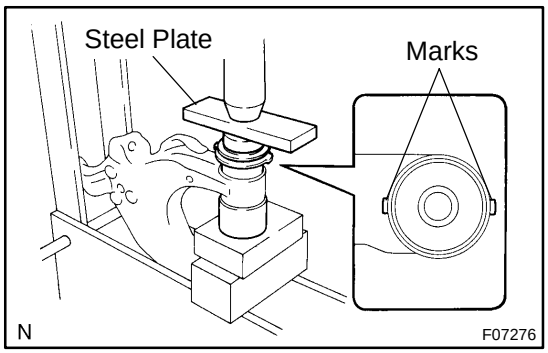

(d) Using SST, a press and steel plate, install a new No. 2 bushing.
SST 09631–12090, 09950–60020 (09951–00680)

HINT:
Before installing the bushing, set it in the correct direction, as shown in the illustration.

2. REPLACE NO. 1 AND NO. 2 SPRING BUMPERS ON–VEHICLE

(a) Remove the front wheel.

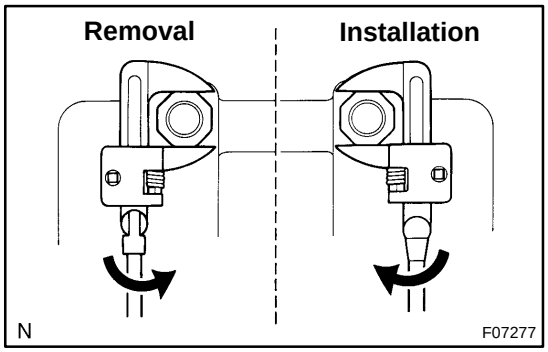

(b) Using SST, replace the No. 1 spring bumper.
SST 09922–10010

HINT:
At the time of installation, use a torque wrench with a fulcrum length of 345 mm (13.58 in.).

Torque: 23 N·m (235 kgf·cm, 17 ft·lbf)

(c) Replace No. 2 spring bumper.

(1) Remove the stabilizer bar (See page SA–80).

(2) Using SST, replace the No. 2 spring bumper.

SST 09922–10010

HINT:

At the time of installation, use a torque wrench with a fulcrum length of 345 mm (13.58 in.).

Torque: 23 N·m (235 kgf·cm, 17 ft·lbf)

(3) Install the stabilizer bar (See page SA–82).

(d) Install the front wheel.

Torque: 110 N·m (1,150 kgf·cm, 83 ft·lbf)

SA1KK–02

INSTALLATION

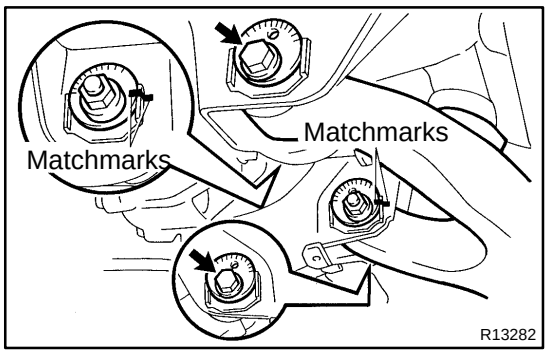

1. INSTALL LOWER SUSPENSION ARM TO CHASSIS FRAME

Install the lower suspension arm with the 2 cams, bolts and cam plates while slightly shifting the power steering gear rearward.

Torque: 130 N·m (1,325 kgf·cm, 96 ft·lbf)

NOTICE:

Do not damage the power steering gear tubes.

HINT:

After stabilizing the suspension, align the matchmarks on the front and rear cam plates and chassis frame, and torque the bolts.

2. CONNECT LOWER BALL JOINT TO LOWER SUSPENSION ARM

Connect the lower ball joint and install the nut and a new cotter pin.

Torque: 140 N·m (1,450 kgf·cm, 103 ft·lbf)

If the holes for the cotter pin are not aligned, tighten the nut further up to 60°.

3. CONNECT SHOCK ABSORBER TO LOWER SUSPENSION ARM

Torque: 135 N·m (1,400 kgf·cm, 100 ft·lbf)

4. CONNECT STABILIZER BAR LINK TO LOWER SUSPENSION ARM

Torque: 69 N·m (700 kgf·cm, 51 ft·lbf)

HINT:

If the ball joint turns together with the nut, use a hexagon (6 mm) wrench to hold the stud.

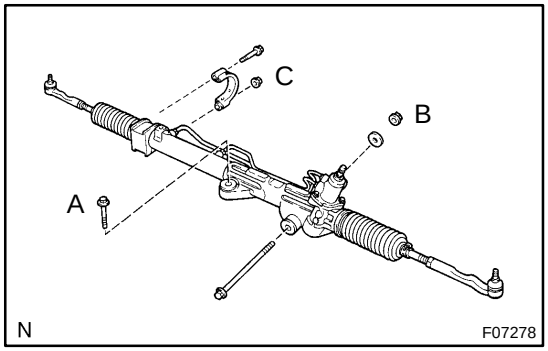

5. INSTALL POWER STEERING GEAR

Torque:

A bolt: 165 N·m (1,700 kgf·cm, 122 ft·lbf)

B nut: 130 N·m (1,350 kgf·cm, 96 ft·lbf)

C bolt and nut: 165 N·m (1,700 kgf·cm, 122 ft·lbf)

6. CONNECT RH AND LH TIE ROD ENDS

Connect the RH and LH tie rod ends to the lower ball joints with the nuts and new cotter pins.

Torque: 91 N·m (930 kgf·cm, 67 ft·lbf)

If the holes for the cotter pin are not aligned, tighten the nut further up to 60°.

7. INSTALL RH AND LH FRONT WHEELS

Torque: 110 N·m (1,150 kgf·cm, 83 ft·lbf)

8. CHECK FRONT WHEEL ALIGNMENT (See page SA–5)

FRONT UPPER BALL JOINT

COMPONENTS

SA1K7–02

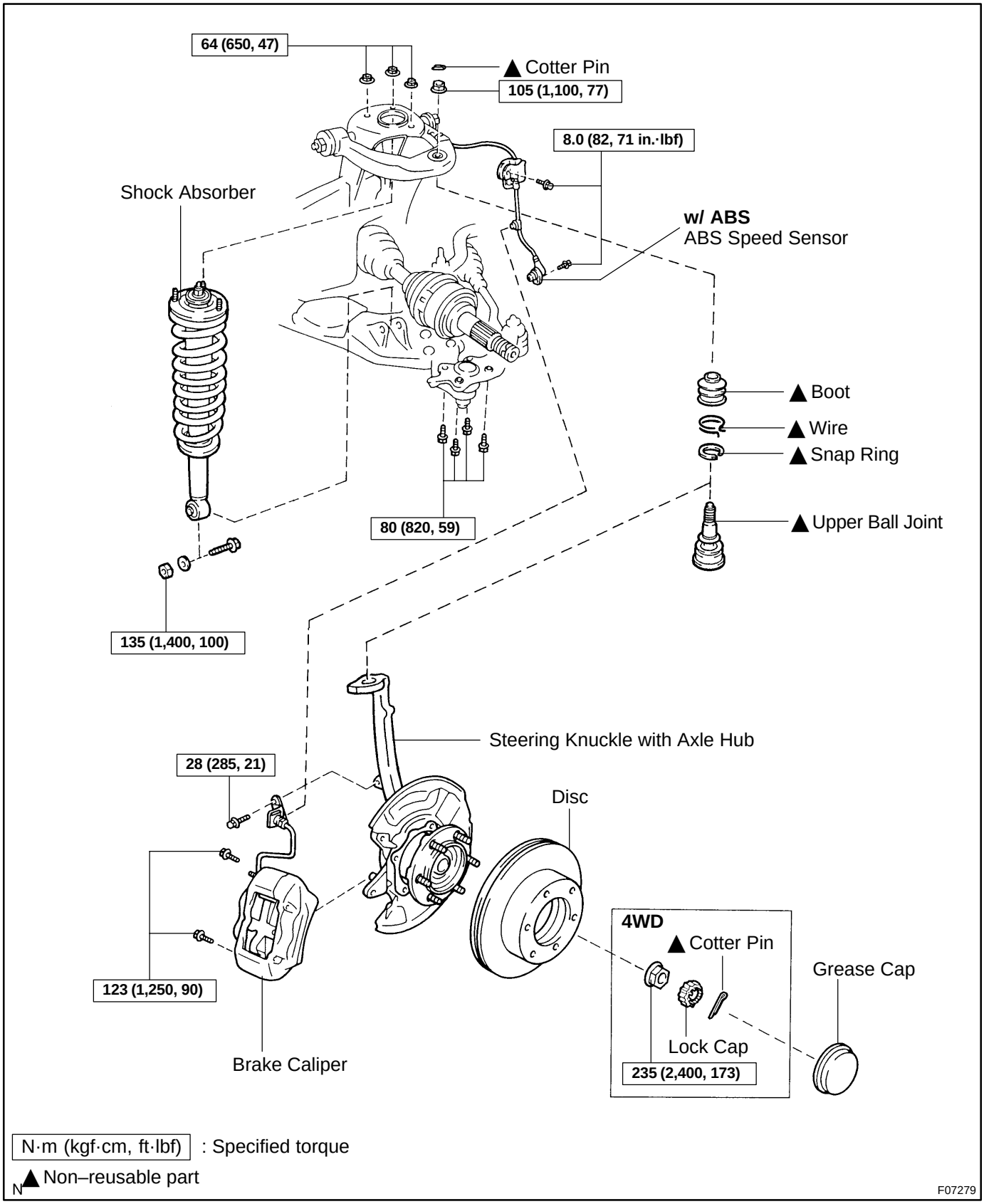

SA1K8–01

REMOVAL

1. REMOVE STEERING KNUCKLE WITH AXLE HUB (See page SA–10)

2. REMOVE UPPER BALL JOINT

(a) Remove the wire and boot.

(b) Using a snap ring expander, remove the snap ring.

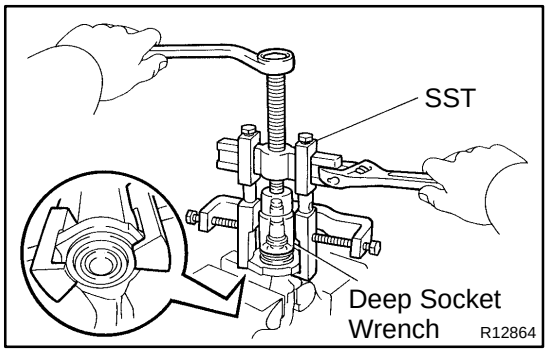

(c) Using SST and a deep socket wrench, remove the upper ball joint.

SST 09950–40011 (09951–04010, 09952–04010, 09953–04020, 09954–04010, 09955–04031, 09957–04010, 09958–04011)

SA0AO–03

INSPECTION

1. INSPECT UPPER BALL JOINT BOOT FOR DAMAGE

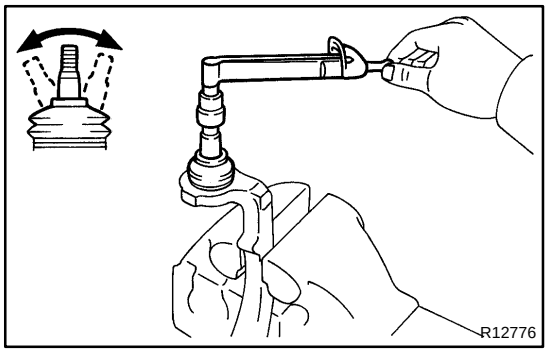

2. INSPECT UPPER BALL JOINT FOR ROTATION CONDITION

(a) As shown in the illustration, flip the ball joint stud back and forth 5 times, before installing the nut.

(b) Using a torque wrench, turn the nut continuously 1 turn per 2 – 4 seconds and take the torque reading on the 5th turn.

Turning torque:
0.7 – 4.4 N·m (7 – 45 kgf·cm, 6 – 39 in.·lbf)

SA1K9–01

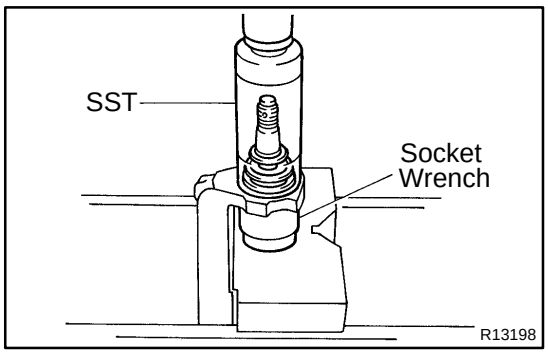

INSTALLATION

1. INSTALL UPPER BALL JOINT

(a) Using SST and a socket wrench, install a new ball joint.
SST 09309–37010

(b) Using a snap ring expander, install a new snap ring.

(c) Install a new boot and fix it with a new wire.

HINT:

Use the grease supplied in the kit.

2. INSTALL STEERING KNUCKLE WITH AXLE HUB
(See page SA–16)

FRONT LOWER BALL JOINT

SA0AW–03

ON–VEHICLE INSPECTION

INSPECT LOWER BALL JOINT EXCESSIVE PLAY ON–VEHICLE

(a) Remove the front wheel and install the hub nuts to the disc.

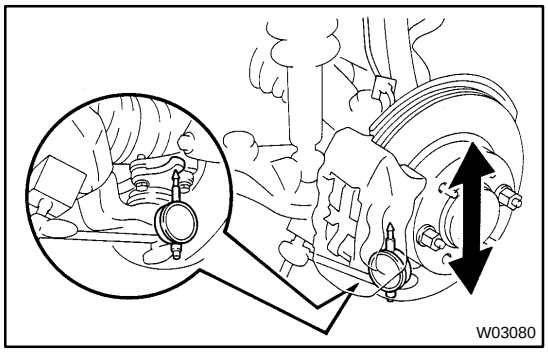

(b) Using a dial indicator, check the lower ball joint for excessive play when you push the hub nuts up and down with a force of 294 N (30 kgf, 66 lbf).
Maximum: 0.5 mm (0.020 in.)

SA0AX–04

COMPONENTS

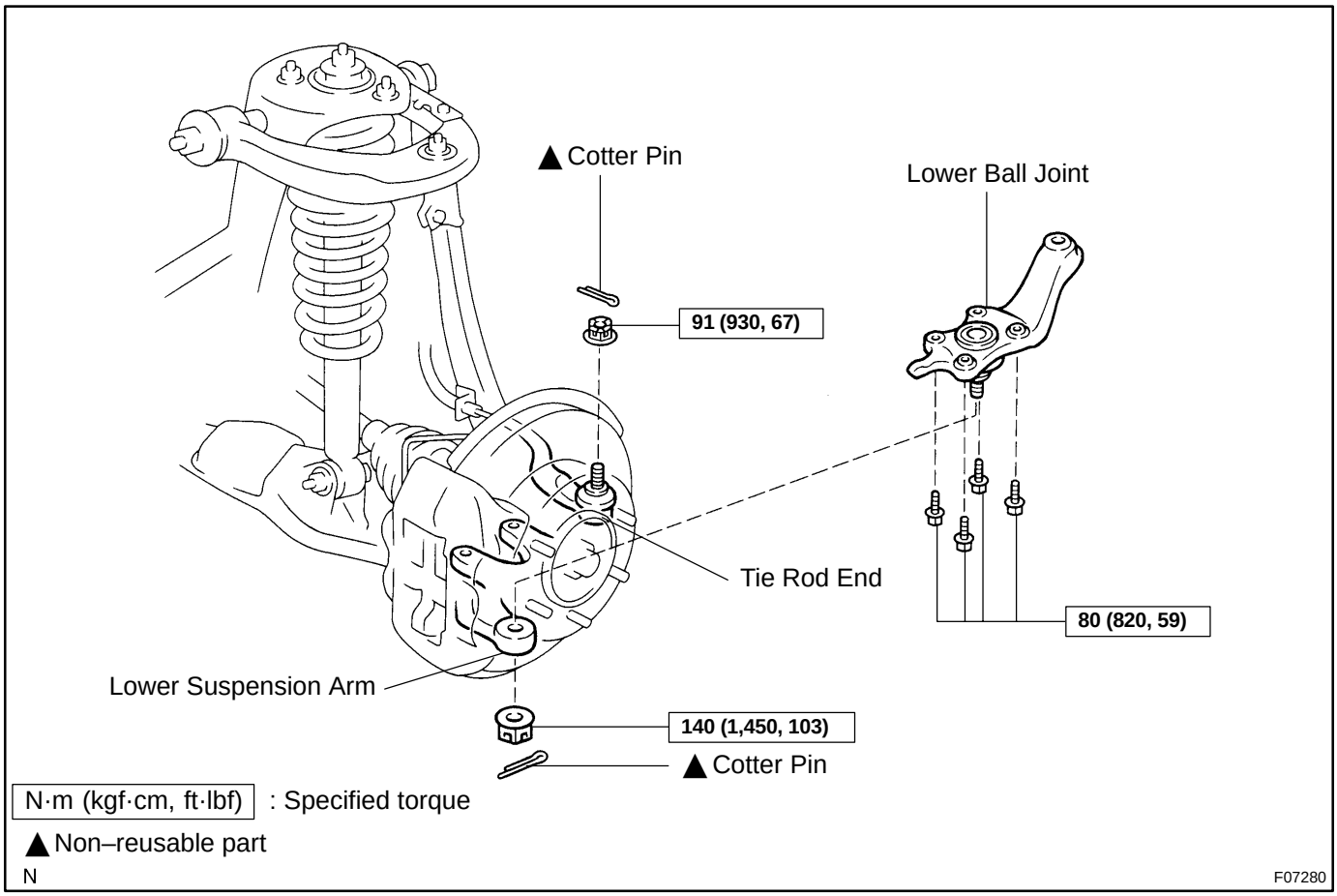

SA0AY–03

REMOVAL

1. REMOVE FRONT WHEEL

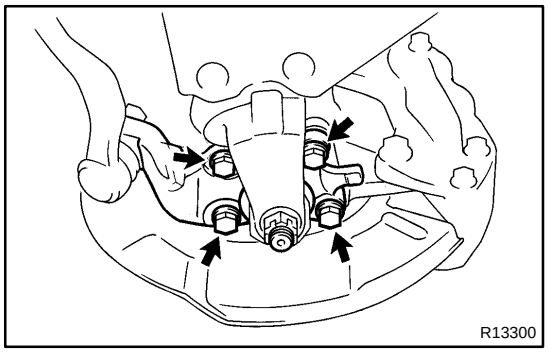

2. LOOSEN 4 LOWER BALL JOINT SET BOLTS

HINT:

Do not remove the bolts.

3. DISCONNECT TIE ROD END

(a) Remove the cotter pin and nut from the tie rod end.

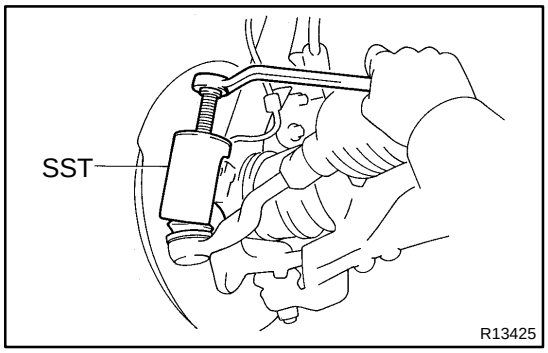

(b) Using SST, disconnect the tie rod end from the lower ball joint.

SST 09610–20012

4. REMOVE LOWER BALL JOINT

(a) Remove the cotter pin and nut from the lower ball joint.

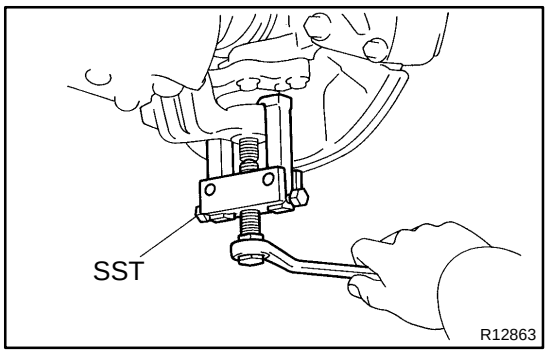

(b) Using SST, disconnect the lower ball joint from the lower suspension arm.

SST 09628–62011

(c) Remove the 4 lower ball joint set bolts.

(d) While lifting the upper suspension arm and steering knuckle, remove the lower ball joint.

(e) Support the upper suspension arm and steering knuckle securely.

SA0AZ–03

INSPECTION

1. INSPECT LOWER BALL JOINT BOOT FOR DAMAGE

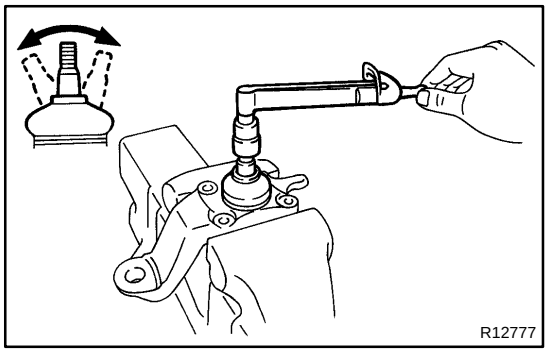

2. INSPECT LOWER BALL JOINT FOR ROTATION CONDITION

(a) As shown in the illustration, flip the ball joint stud back and forth 5 times before installing the nut.

(b) Using a torque wrench, turn the nut continuously 1 turn per 2 – 4 seconds and take the torque reading on the 5th turn.

Turning torque:
0.1 – 2.5 N·m (1 – 25 kgf·cm, 1 – 22 in.·lbf)

SA0B0–03

INSTALLATION

1. INSTALL LOWER BALL JOINT

(a) While lifting the upper suspension arm and steering knuckle, install the lower ball joint.

(b) Temporarily install the 4 bolts to the lower ball joint.

(c) Install the set nut to hold the lower ball joint to the lower suspension arm and a new cotter pin.

Torque: 140 N·m (1,450 kgf·cm, 103 ft·lbf)

If the holes for the cotter pin are not aligned, tighten the nut further up to 60°.

2. CONNECT TIE ROD END

Connect the tie rod end to the lower ball joint with the nut and a new cotter pin.

Torque: 91 N·m (930 kgf·cm, 67 ft·lbf)

If the holes for the cotter pin are not aligned, tighten the nut further up to 60°.

3. TIGHTEN LOWER BALL JOINT SET 4 BOLTS

Torque: 80 N·m (820 kgf·cm, 59 ft·lbf)

4. INSTALL FRONT WHEEL

Torque: 110 N·m (1,150 kgf·cm, 83 ft·lbf)

5. CHECK FRONT WHEEL ALIGNMENT (See page SA–5)

FRONT STABILIZER BAR

COMPONENTS

SA0B4–05

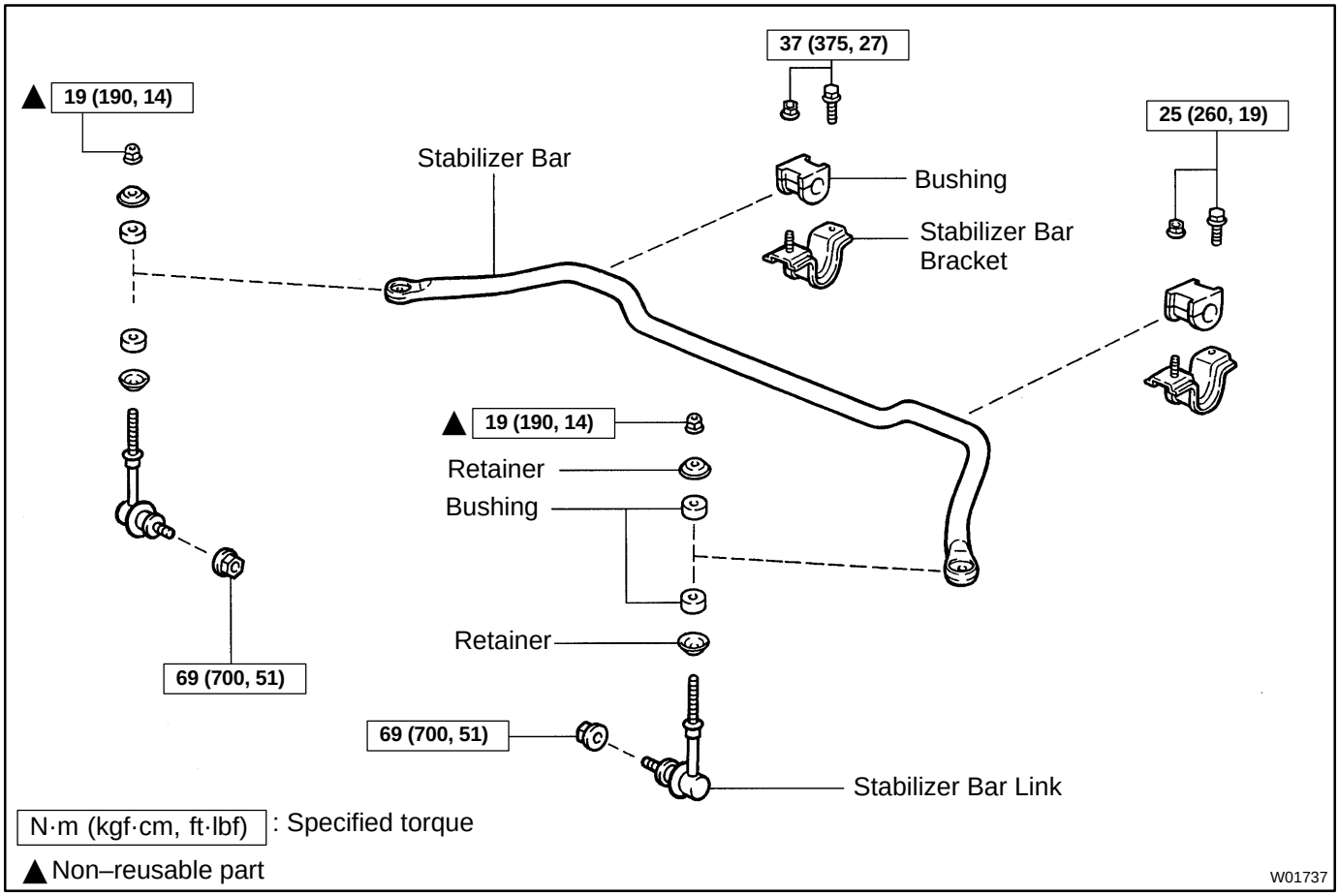

SA0B5–03

REMOVAL

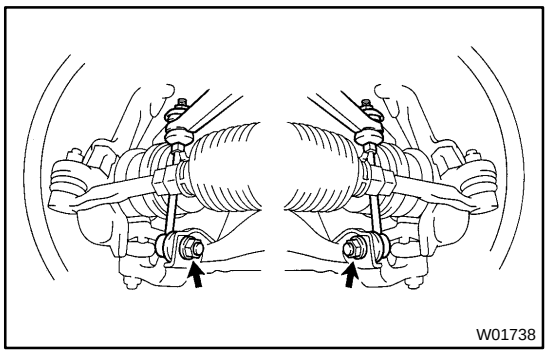

1. DISCONNECT STABILIZER BAR LINKS

Remove the 2 nuts and disconnect the stabilizer bar links from the lower suspension arms.

HINT:

If the ball joint turns together with the nut, use a hexagon (6 mm) wrench to hold the stud.

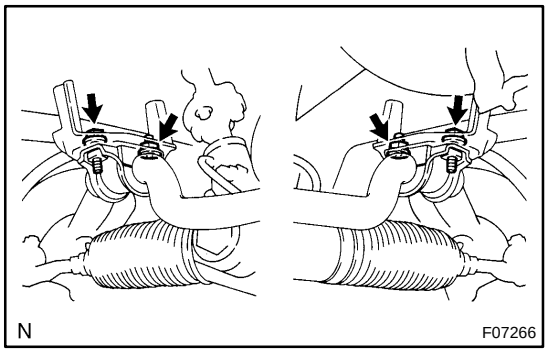

2. REMOVE STABILIZER BAR

(a) Remove the 2 bolts, nuts and stabilizer bar with the cushions and brackets.

(b) Remove the 2 brackets and cushions from the stabilizer bar.

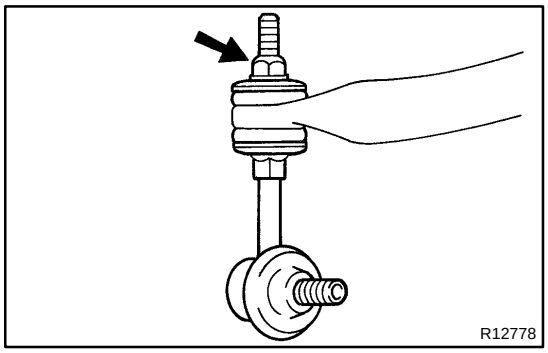

3. REMOVE STABILIZER BAR LINKS

(a) Hold the stabilizer bar link, remove the nut.

(b) Remove the stabilizer bar link, 2 retainers and bushings from the stabilizer bar.

(c) Employ the same manner described above to the other side.

SA0B6–03

INSPECTION

1. INSPECT STABILIZER BAR LINK BALL JOINT BOOT FOR DAMAGE

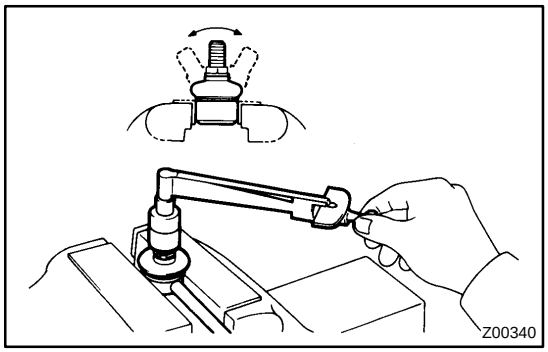

2. INSPECT STABILIZER BAR LINK BALL JOINT FOR ROTATION CONDITION

(a) As shown in the illustration, flip the ball joint stud back and forth 5 times before installing the nut.

(b) Using a torque wrench, turn the nut continuously 1 turn per 2 – 4 seconds and take the torque reading on the 5th turn.

Turning torque:
0.05 – 2.0 N·m (0.5 – 20 kgf·cm, 0.4 – 17 in.·lbf)

SA1KA–02

INSTALLATION

1. INSTALL STABILIZER BAR LINKS

(a) Install the 2 bushings, retainers and stabilizer bar link to the stabilizer bar.

(b) Hold the stabilizer bar link, install the nut.
Torque: 19 N·m (190 kgf·cm, 14 ft·lbf)

(c) Employ the same manner described above to the other side.

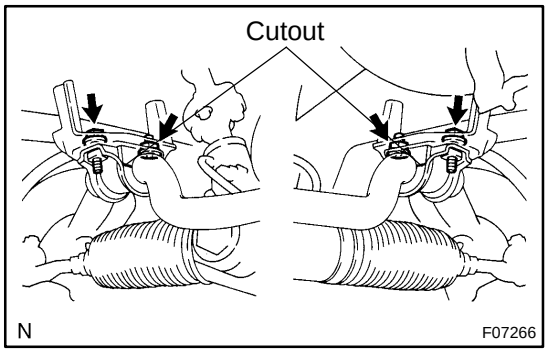

2. INSTALL STABILIZER BAR

(a) Install the 2 bushings with their cutout facing to the rearward to the stabilizer bar.

(b) Install the stabilizer bar and 2 brackets with nut and bolts.
Torque: 37 N·m (375 kgf·cm, 27 ft·lbf)

3. CONNECT STABILIZER BAR LINKS TO LOWER SUSPENSION ARM
Torque: 69 N·m (700 kgf·cm, 51 ft·lbf)

HINT:
If the ball joint turns together with the nut, use a hexagon (6 mm) wrench to hold the nut.

REAR AXLE SHAFT

COMPONENTS

SA1KB–02

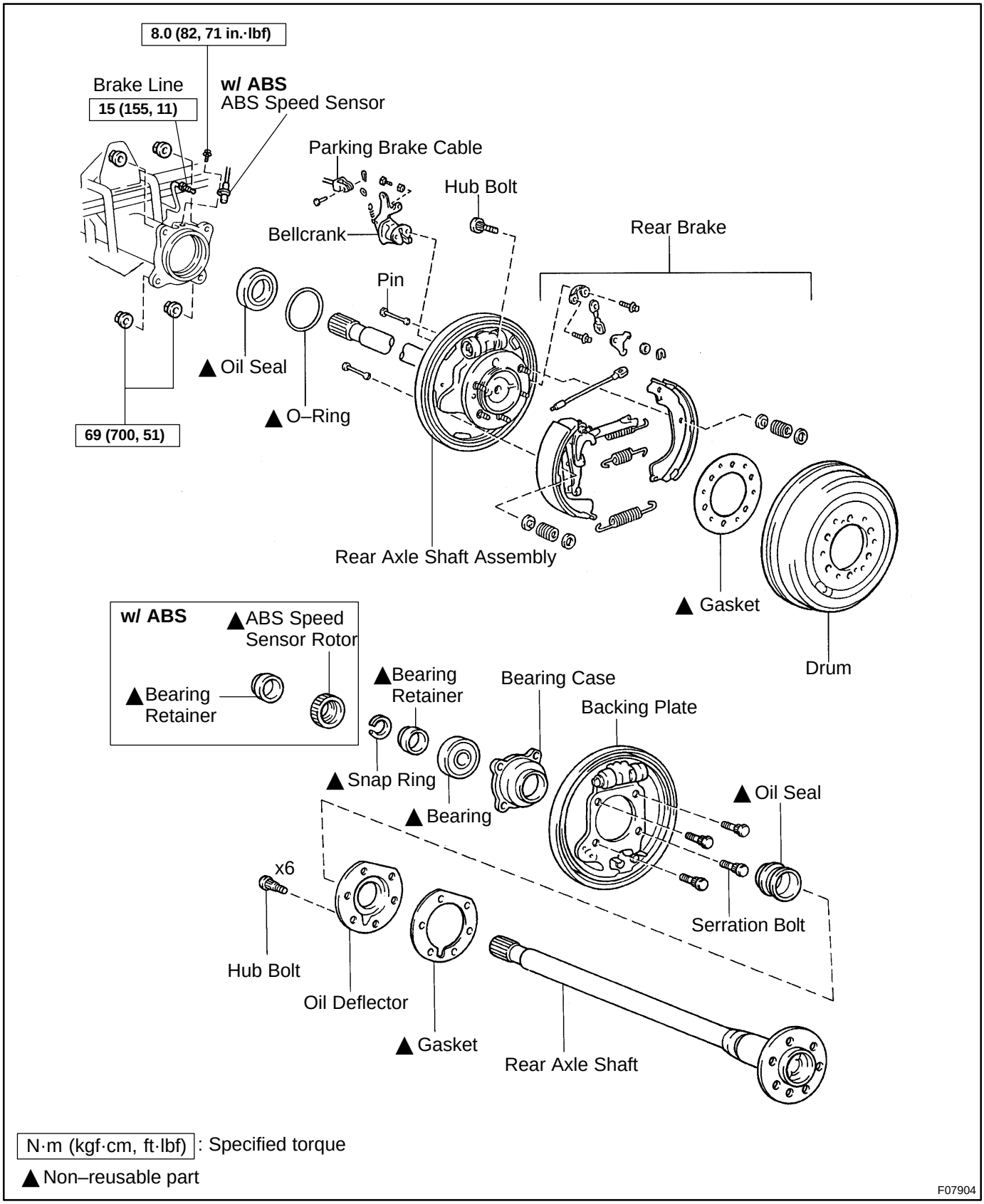

N·m (kgf·cm, ft·lbf) : Specified torque

▲ Non–reusable part

F07904

SA0B9–05

REMOVAL

1. REMOVE REAR WHEEL

2. REMOVE BRAKE DRUM AND GASKET

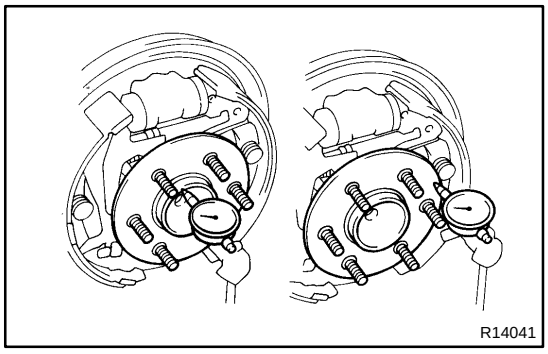

3. CHECK BEARING BACKLASH AND AXLE SHAFT DEVIATION

(a) Using a dial indicator, check the backlash in the bearing shaft direction.

Maximum: 0.7 mm (0.028 in.)

If the backlash exceeds the maximum, replace the bearing.

(b) Using a dial indicator, check the deviation at the surface of the axle shaft outside the hub bolt.

Maximum: 0.1 mm (0.004 in.)

If the deviation exceeds the maximum, replace the axle shaft.

4. w/ ABS:

REMOVE ABS SPEED SENSOR FROM REAR AXLE HOUSING

Remove the bolt and ABS speed sensor.

5. REMOVE REAR BRAKE ASSEMBLY (See page BR–33)

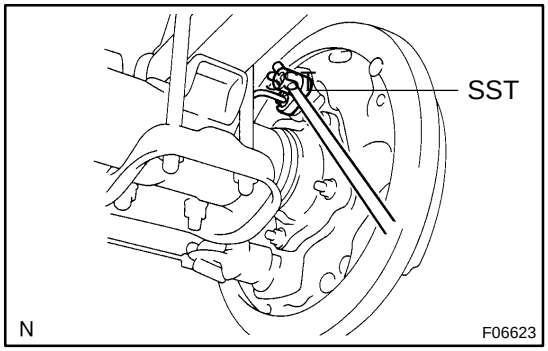

6. DISCONNECT BRAKE LINE AND PARKING BRAKE CABLE

(a) Using SST, disconnect the brake line from the wheel cylinder.

SST 09023–00100

(b) Remove the clip and pin, and disconnect the parking brake cable.

7. REMOVE REAR AXLE SHAFT ASSEMBLY

(a) Remove the 4 backing plate mounting nuts.

(b) Pull out the rear axle shaft assembly from the rear axle housing.

NOTICE:

Be careful not to damage the oil seal.

8. REMOVE O–RING FROM REAR AXLE HOUSING

SA1GB–03

INSPECTION

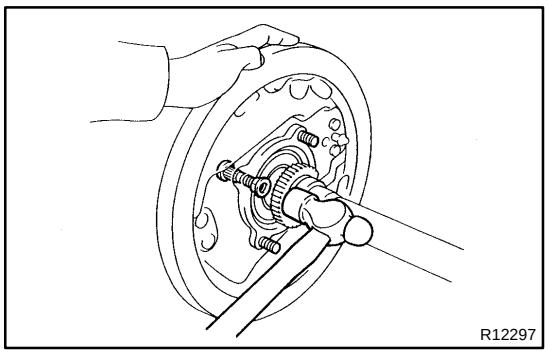

1. w/ ABS:

REMOVE BEARING RETAINER (DIFFERENTIAL SIDE) AND ABS SPEED SENSOR ROTOR

(a) Attach 4 nuts to the serration bolts and using a hammer remove the serration bolts from the backing plate.

NOTICE:

At the time of installation, do not reuse the nuts.

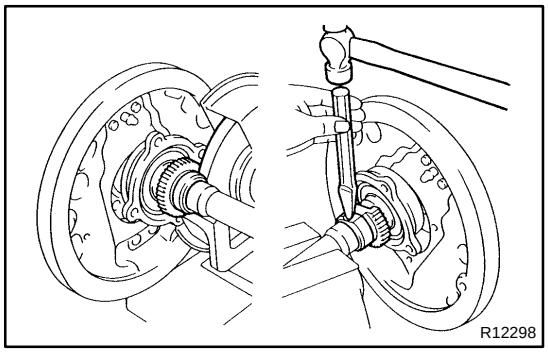

(b) Grind the retainer and sensor rotor surfaces, then chisel them out.

(c) Attach washers and nuts to the serration bolts, then torque the nuts to install the serration bolts to the backing plate.

(d) Remove the 4 nuts and washers from the serration bolts.

2. REMOVE SNAP RING FROM AXLE SHAFT

Using a snap ring expander, remove the snap ring.

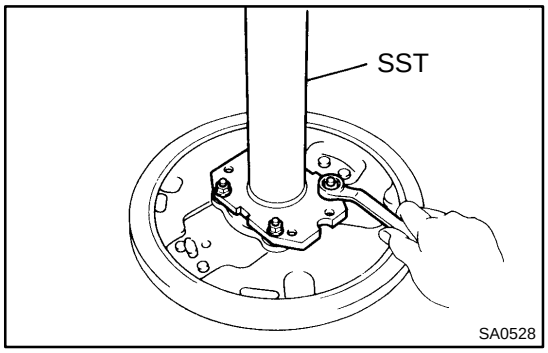

3. REMOVE REAR AXLE SHAFT FROM BACKING PLATE

(a) Position SST on the backing plate with the 4 nuts.
SST 09521–25011

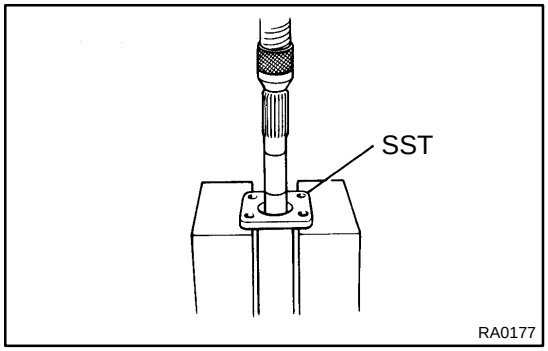

(b) Using a press, remove the rear axle shaft and bearing retainer from the backing plate.

(c) Remove the SST.
SST 09521–25011

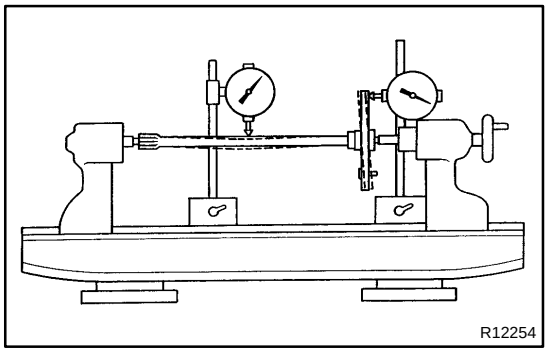

4. INSPECT AXLE SHAFT

Using a dial indicator, measure the runout of the shaft and flange.

Maximum shaft runout: 2.0 mm (0.079 in.)

Maximum flange runout: 0.1 mm (0.004 in.)

If the rear axle shaft or flange are damaged or worn, or if runout is greater than the maximum, replace the rear axle shaft.

5. INSPECT OIL SEAL (OUTER SIDE)

(a) Check for damage.

(b) Check the oil seal lip for wear or damage.

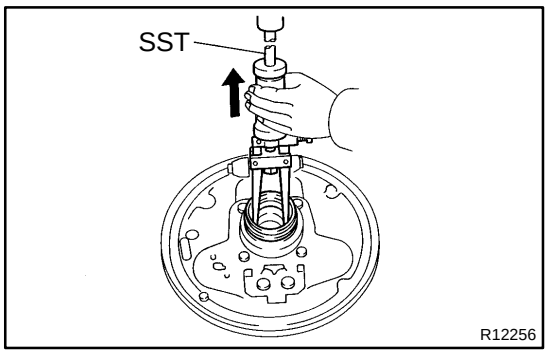

6. REMOVE OIL SEAL (OUTER SIDE)

Using SST, remove the oil seal.

SST 09308–00010

7. INSPECT REAR AXLE BEARING

Check for wear or damage.

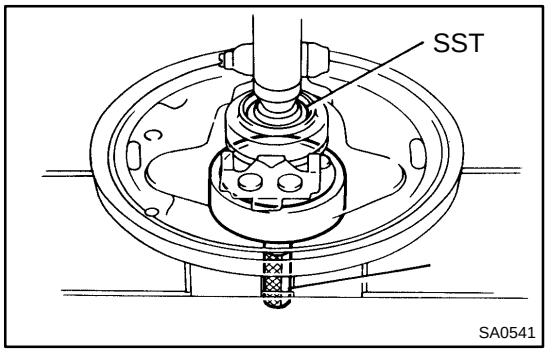

8. REPLACE REAR AXLE BEARING

(a) Using SST and a press, remove the bearing.

SST 09223–56010, 09950–60010 (09951–00560)

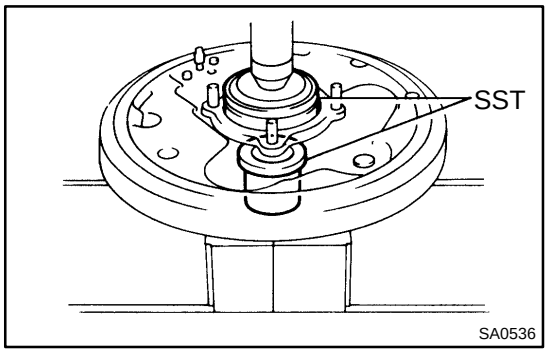

(b) Using SST and a press, install a new bearing.

SST 09515–30010, 09950–60020 (09951–00890)

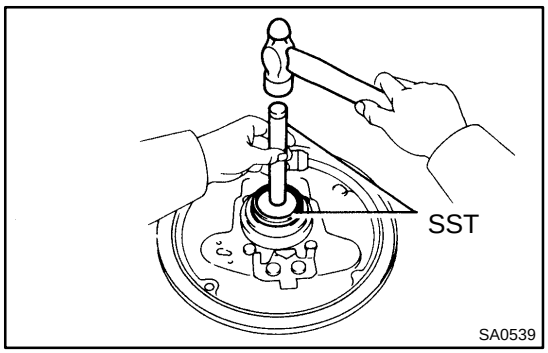

9. INSTALL NEW OIL SEAL (OUTER SIDE)

Using SST and a hammer, install a new oil seal.

SST 09950–60010 (09951–00610),
09950–70010 (09951–07150)

10. INSPECT BEARING CASE

Check for wear or damage.

11. REPLACE BEARING CASE

(a) Remove the outer side oil seal (See step 5.).
(b) Remove the bearing (See step 6.).
(c) Remove the serration bolts (See step 1.).
(d) Remove the bearing case.

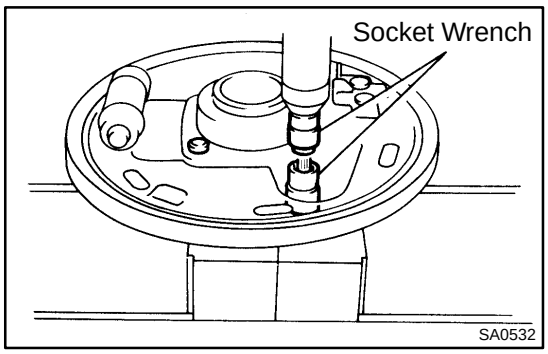

(e) Position the backing plate on a new bearing case and using 2 socket wrenches and a press, install the serration bolts.
(f) Install a new bearing (See step 6.).
(g) Install a new outer side oil seal (See step 7.).

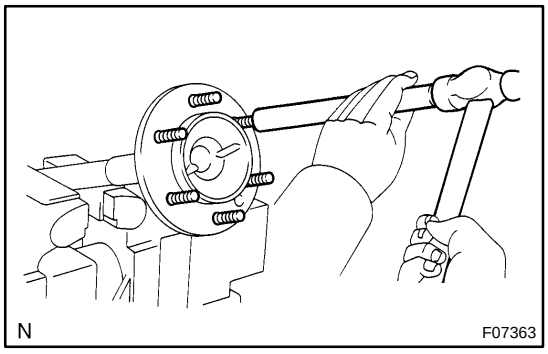

12. REPLACE OIL DEFLECTOR

(a) Using a brass bar and hammer, remove the hub bolts, oil deflector and gasket.
(b) Position a new gasket and oil deflector on the axle shaft and install a washer and nut to the hub bolt and install the hub bolt by torquing the nut.
(c) Remove the nut and washer.

13. INSTALL REAR AXLE SHAFT IN BACKING PLATE

(a) Coat the new outer side oil seal lip with MP grease.

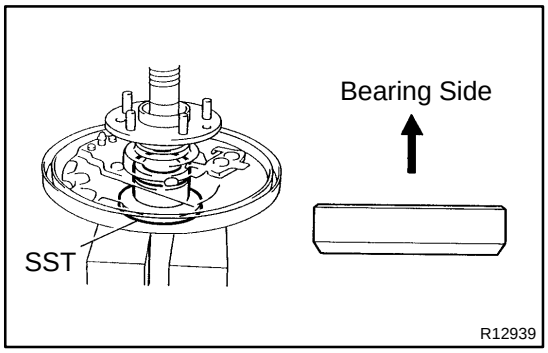

(b) Install the backing plate and bearing retainer on the rear axle shaft.
(c) Using SST and a press, install the rear axle shaft into the backing plate.
SST 09316–60011 (09316–00051)
(d) Using snap ring expander, install a new snap ring.

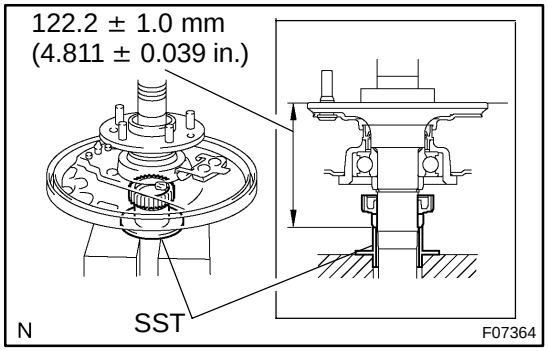

14. w/ ABS:
INSTALL ABS SPEED SENSOR ROTOR AND BEARING RETAINER (DIFFERENTIAL SIDE)

Using SST and a press, install a new sensor rotor and new bearing retainer to the axle shaft.
SST 09316–60011 (09316–00051)
Standard length: 122.2 ± 1.0 mm (4.811 ± 0.039 in.)

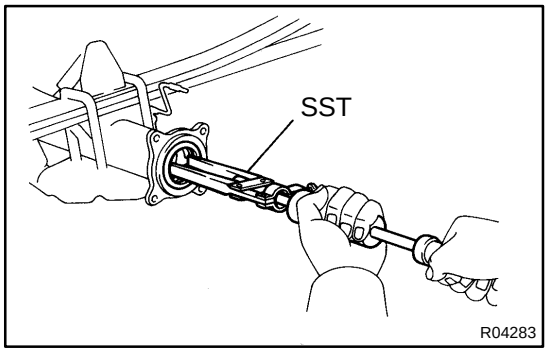

15. REPLACE OIL SEAL (INNER SIDE)

(a) Using SST, remove the oil seal.
SST 09308–00010

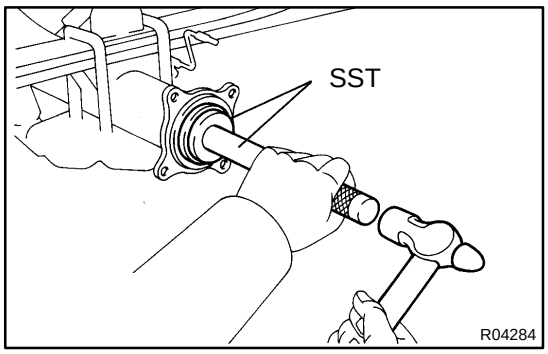

(b) Using SST and a hammer, install a new oil seal.
SST 09950–60020 (09951–00710),
09950–70010 (09951–07150)

(c) Coat a new oil seal lip with MP grease.

SA1KC–02

INSTALLATION

1. INSTALL NEW O–RING TO REAR AXLE HOUSING

2. INSTALL REAR AXLE SHAFT ASSEMBLY
Torque: 69 N·m (700 kgf·cm, 51 ft·lbf)

3. CONNECT BRAKE LINE AND PARKING BRAKE CABLE

(a) Connect the parking brake cable with the pin and clip.

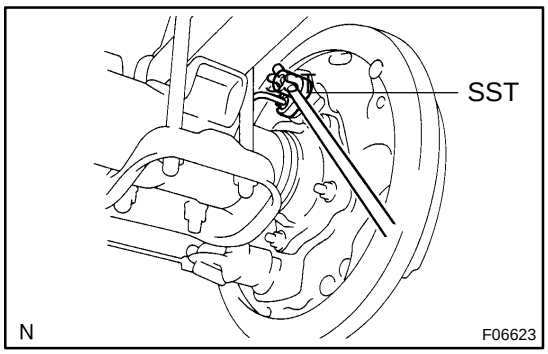

(b) Using SST, connect the brake line to the wheel cylinder.
SST 09023–00100
Torque: 15 N·m (155 kgf·cm, 11 ft·lbf)

4. INSTALL REAR BRAKE ASSEMBLY (See page BR–37)

5. w/ ABS:
INSTALL ABS SPEED SENSOR
Torque: 8.0 N·m (82 kgf·cm, 71 ft·lbf)

6. CHECK BEARING BACKLASH AND AXLE SHAFT DEVIATION (See page SA–84)

7. INSTALL NEW GASKET AND BRAKE DRUM

8. INSTALL REAR WHEEL
Torque: 110 N·m (1,150 kgf·cm, 83 ft·lbf)

9. BLEED BRAKE SYSTEM (See page BR–4)

10. w/ ABS:
CHECK ABS SPEED SENSOR SIGNAL (See page DI–448)

REAR WHEEL HUB BOLT

SA0BC–04

REPLACEMENT

1. REMOVE REAR WHEEL

2. REMOVE BRAKE DRUM AND GASKET

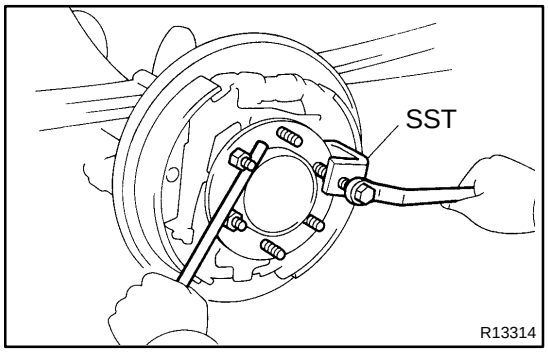

3. REMOVE REAR HUB BOLT

Using SST and a brass bar or an equivalent, remove the hub bolt.

SST 09650–17011

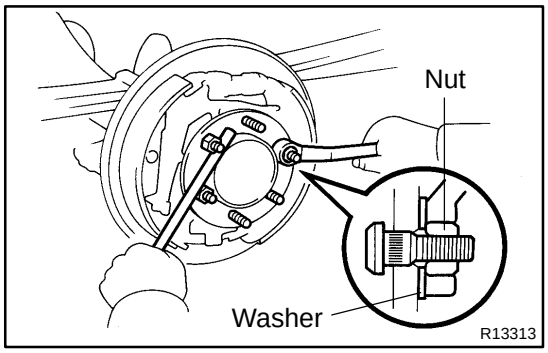

4. INSTALL HUB BOLT

(a) Install a washer and nut to a new hub bolt as shown in the illustration.

(b) Using a brass bar or an equivalent to hold, install the hub bolt by torquing the nut.

(c) Remove the nut and washer.

5. INSTALL NEW GASKET AND BRAKE DRUM

6. INSTALL REAR WHEEL

Torque: 110 N·m (1,150 kgf·cm, 83 ft·lbf)

REAR DIFFERENTIAL FRONT OIL SEAL

COMPONENTS

SA0BD–07

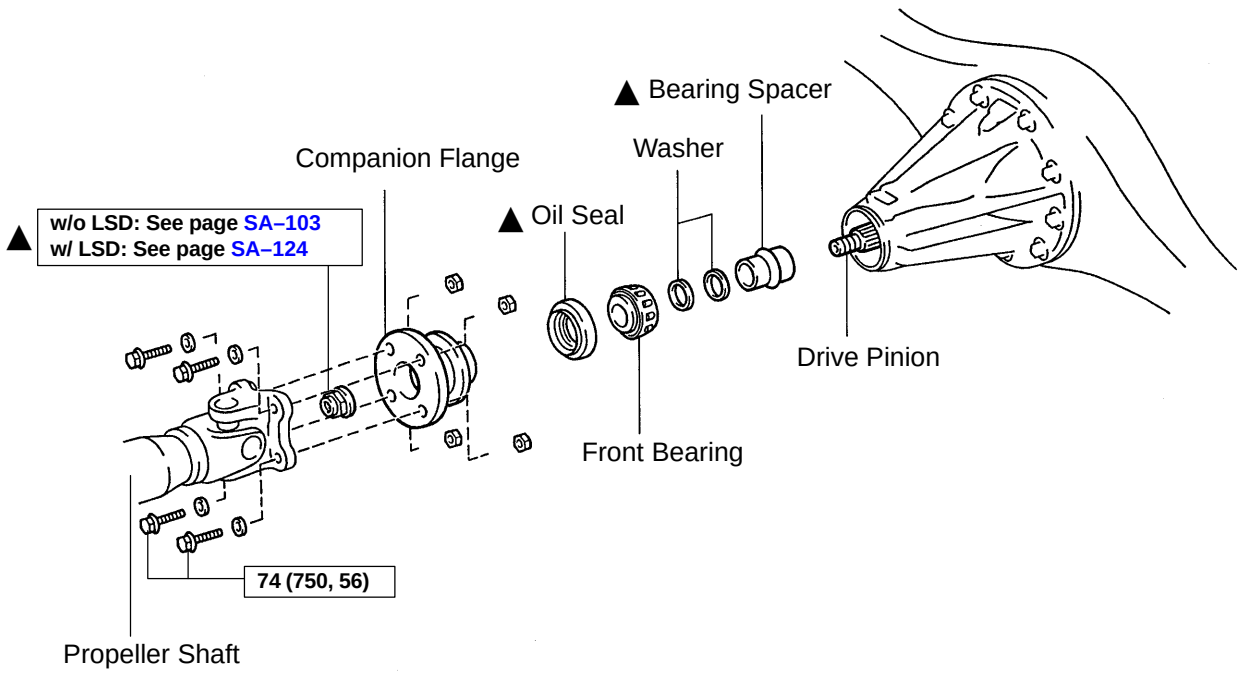

N·m (kgf·cm, ft·lbf) : Specified torque

▲ Non–reusable part

F06622

SA1KD–04

REPLACEMENT

1. DRAIN DIFFERENTIAL OIL

2. DISCONNECT REAR PROPELLER SHAFT

2WD: See page PR–3

4WD: See page PR–10

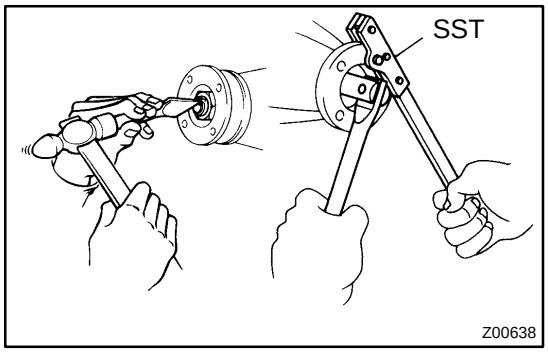

3. REMOVE COMPANION FLANGE

(a) Using a chisel and hammer, loosen the staked part of the nut.

(b) Using SST to hold the flange, remove the nut.

SST 09330–00021

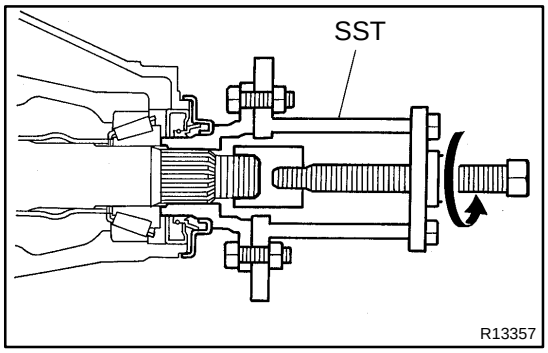

(c) Using SST, remove the companion flange.

SST 09950–30012 (09951–03010, 09953–03010, 09954–03010, 09955–03030, 09956–03050)

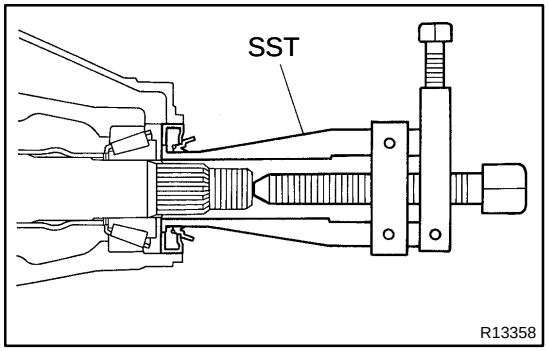

4. REMOVE OIL SEAL

Using SST, remove the oil seal.

SST 09308–10010

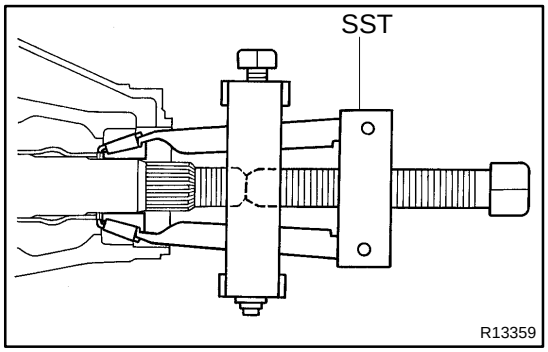

5. REMOVE FRONT BEARING

Using SST, remove the front bearing from the drive pinion.

SST 09556–22010

6. REMOVE BEARING SPACER

(a) Remove the 2 washers.

(b) Remove the bearing spacer.

7. INSTALL NEW BEARING SPACER

(a) Install a new bearing spacer.

(b) Install the 2 washers.

8. INSTALL FRONT BEARING

(a) Place the front bearing.

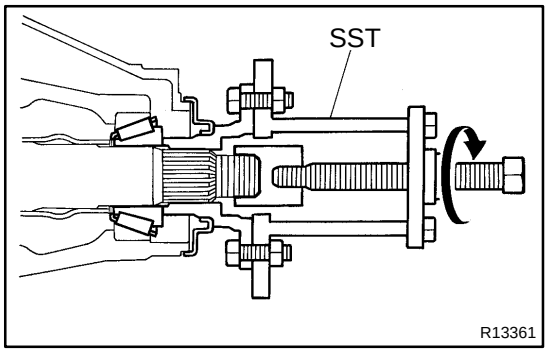

(b) Using SST and the companion flange, install the front bearing then remove the companion flange.
SST 09950–30012 (09951–03010, 09953–03010, 09954–03010, 09955–03030, 09956–03050)

9. INSTALL NEW OIL SEAL

(a) Coat a new oil seal lip with MP grease.

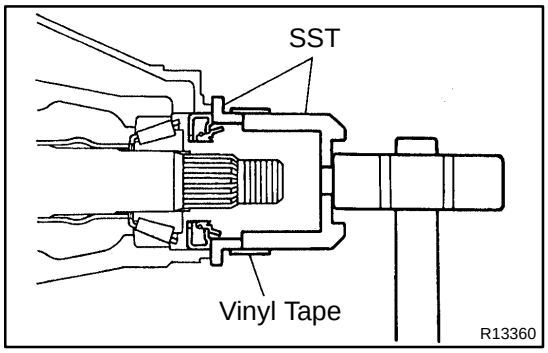

(b) Using SST and a plastic hammer, install the oil seal until its surface is flush with the differential carrier end.
SST 09316–12010, 09649–17010

HINT:
Connect 2 SST with vinyl tape.

10. INSTALL COMPANION FLANGE

(a) Place the companion flange on the drive pinion.

(b) Coat the threads of a new nut with hypoid gear oil.

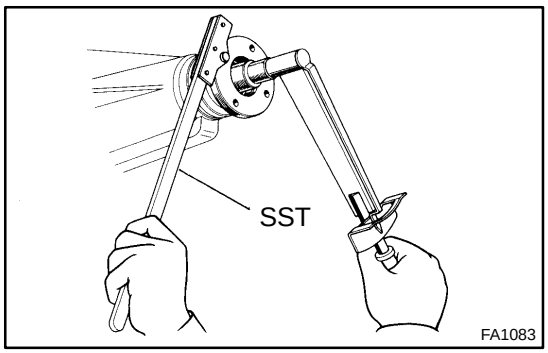

(c) Using SST to hold the flange, torque the nut.
SST 09330–00021
Torque: 147 N·m (1,500 kgf·cm, 109 ft·lbf)

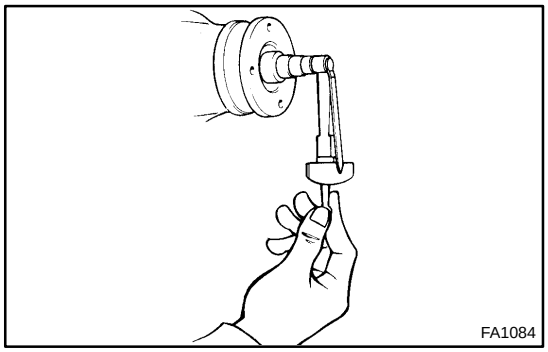

11. ADJUST DRIVE PINION PRELOAD
w/o LSD: See page SA–103
w/ LSD: See page SA–124

12. STAKE DRIVE PINION NUT

13. CONNECT REAR PROPELLER SHAFT
2WD: See page PR–8
4WD: See page PR–15

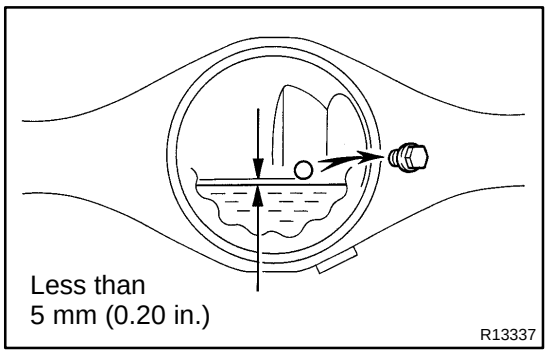

14. FILL DIFFERENTIAL WITH HYPOID GEAR OIL

Torque: 49 N·m (500 kgf·cm, 39 ft·lbf)

Oil type:

w/o LSD	Hypoid gear oil API GL–5
w/ LSD	Hypoid gear oil for LSD API GL–5

Recommended oil viscosity:

Standard type	SAE 75W – 140
LSD type	Above – 18 ˚C (0 ˚F) SAE 90 Below – 18 ˚C (0 ˚F) SAE 80W or 80W – 90

Capacity:

Differential type		Capacity
Standard type	2WD	3.80 liters (4.02 US qts. 3.34 lmp. qts)
	4WD	3.50 liters (3.70 US qts. 3.08 lmp. qts)
LSD type	2WD	3.15 liters (3.33 US qts. 2.77 lmp. qts)
	4WD	2.95 liters (3.12 US qts. 2.60 lmp. qts)

REAR DIFFERENTIAL CARRIER

COMPONENTS

SA0BN–03

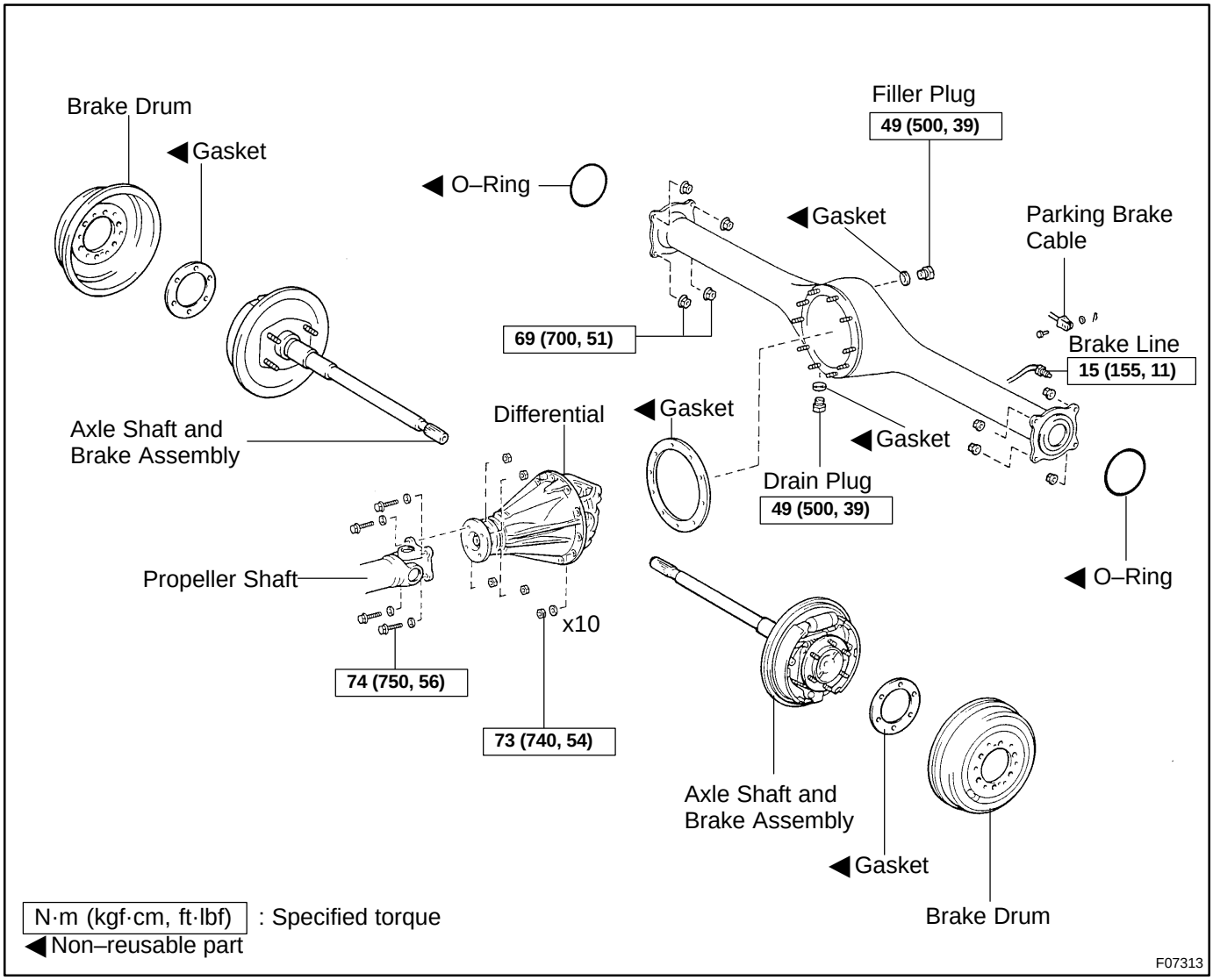

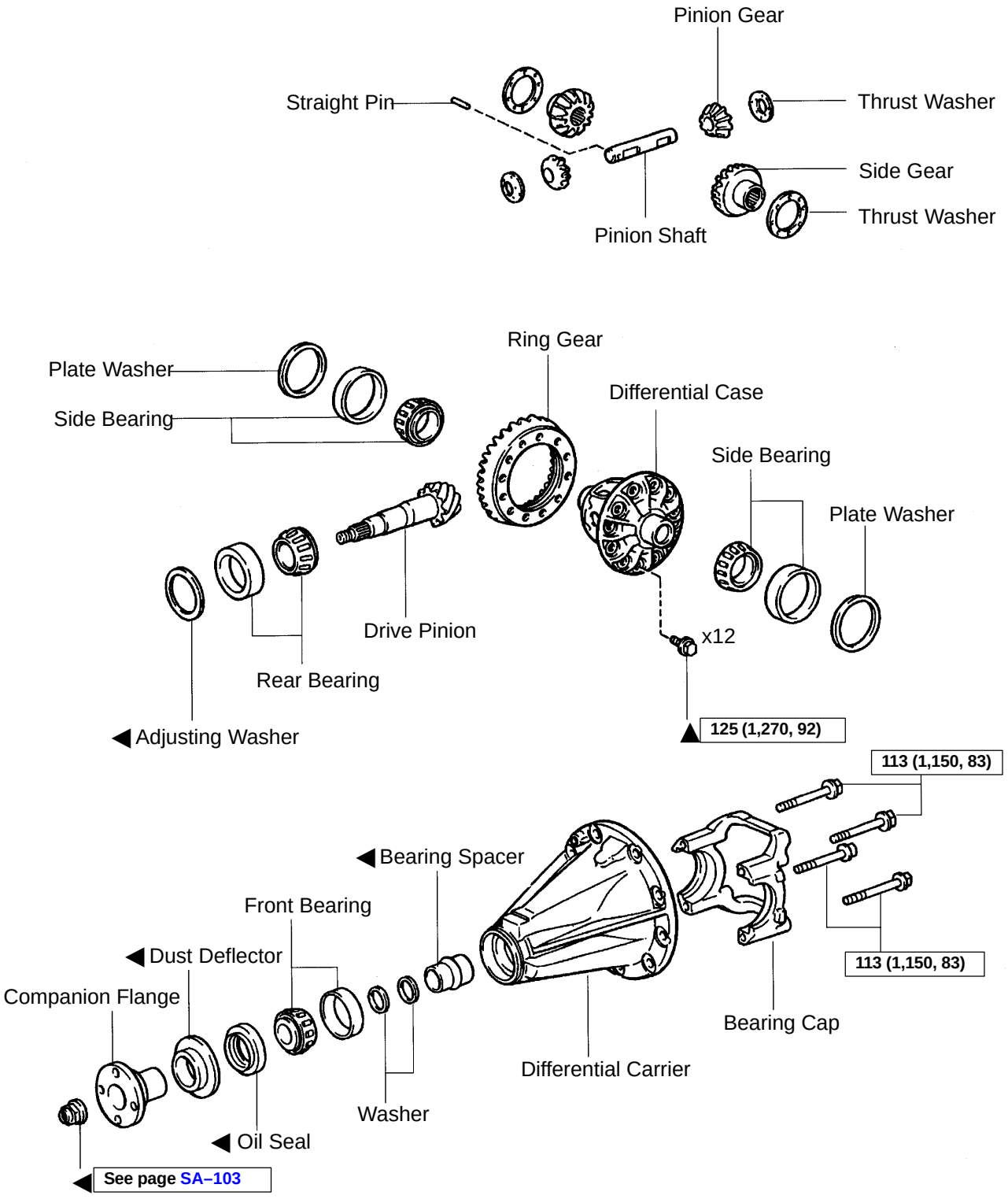

N·m (kgf·cm, ft·lbf) : Specified torque
◀ Non–reusable part
▲ Precoated part

Z19299

SA1KE–01

REMOVAL

1. DRAIN HYPOID GEAR OIL

2. REMOVE REAR AXLE SHAFTS (See page SA–84)

3. DISCONNECT REAR PROPELLER SHAFT

2WD: See page PR–3

4WD: See page PR–10

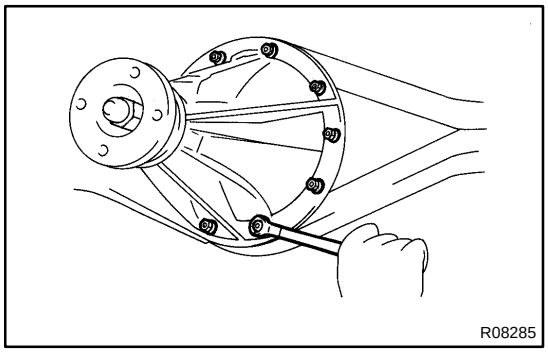

4. REMOVE DIFFERENTIAL CARRIER ASSEMBLY

(a) Remove the 10 nuts, washers and differential carrier assembly.

NOTICE:

Be careful not to damage the installation surface.

(b) Remove the gasket.

SA0BP–08

DISASSEMBLY

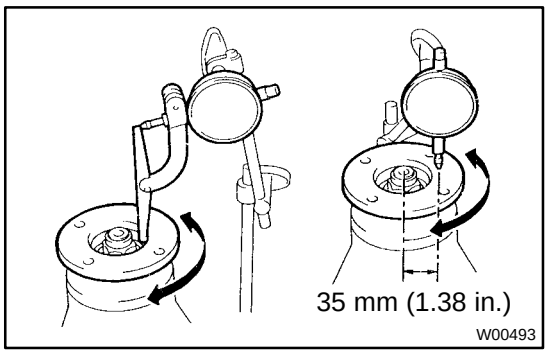

1. CHECK COMPANION FLANGE RUNOUT

Using a dial indicator, measure the vertical and lateral runout of the companion flange.

Maximum: runout: 0.09 mm (0.0035 in.)

If the runout exceeds the maximum, replace the companion flange.

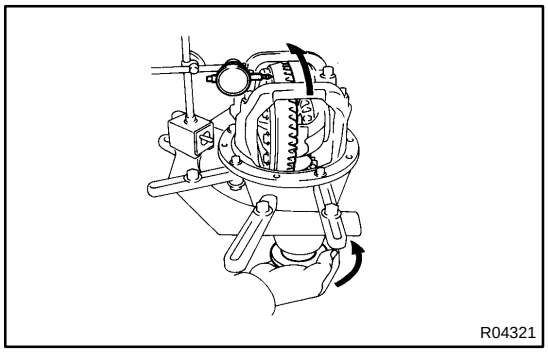

2. CHECK RING GEAR RUNOUT

Using a dial indicator, measure the ring gear runout.

Maximum runout: 0.05 mm (0.0020 in.)

If the runout exceeds the maximum, replace the ring gear.

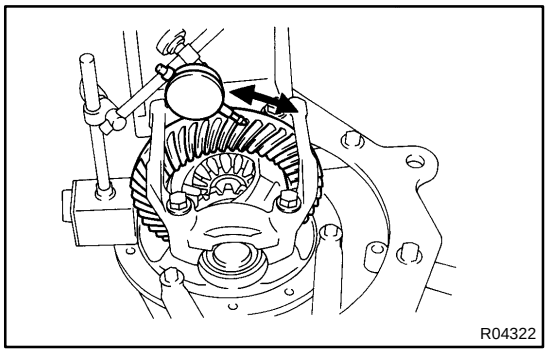

3. CHECK RING GEAR BACKLASH

Using a dial indicator, while holding the companion flange, measure the ring gear backlash.

Backlash: 0.13 – 0.18 mm (0.0051 – 0.0071 in.)

HINT:

Measure at 3 or more positions around the circumference of the ring gear.

If the backlash is not within the specified value, adjust the side bearing preload or repair as necessary.

4. CHECK TOOTH CONTACT BETWEEN RING GEAR AND DRIVE PINION (See page SA–103)

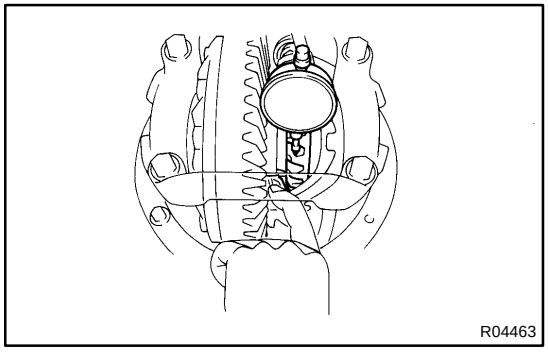

5. CHECK SIDE GEAR BACKLASH

Using a dial indicator, measure the side gear backlash while holding one pinion gear toward the case.

Backlash: 0.05 – 0.20 mm (0.0020 – 0.0079 in.)

If the backlash is not within the specified value, replace the side gear thrust washer of the different thickness (See page SA–103).

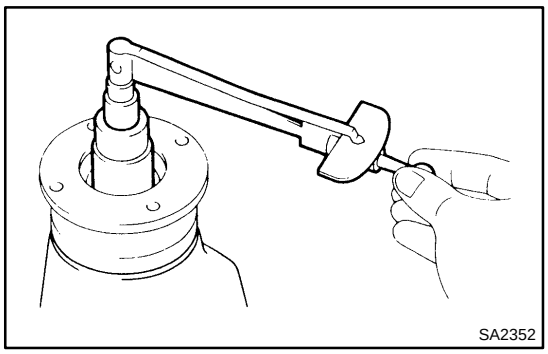

6. MEASURE DRIVE PINION PRELOAD

Using a torque wrench, measure the preload of the drive pinion using the backlash between the drive pinion and ring gear.

Preload (at starting):
0.5 – 0.8 N·m (5 – 8 kgf·cm, 4.3 – 6.9 in.·lbf)

7. CHECK TOTAL PRELOAD

Using a torque wrench, measure the total preload with the teeth of the drive pinion and ring gear in contact.

Total preload (at starting):
Drive pinion preload plus 0.4 – 0.6 N·m (4 – 6 kgf·cm, 3.5 – 5.2 in.·lbf)

If necessary, disassemble and inspect the differential.

8. REMOVE COMPANION FLANGE

(a) Using a chisel and hammer, unstake the staked part of the nut.

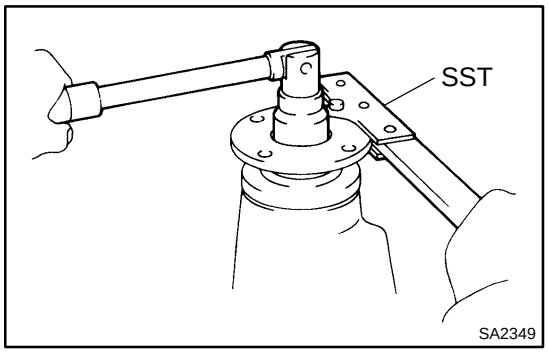

(b) Using SST to hold the flange, remove the nut.
SST 09330–00021

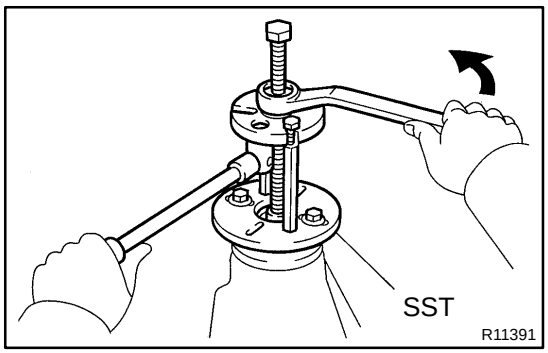

(c) Using SST, remove the companion flange.
SST 09950–30012 (09951–03010, 09953–03010, 09954–03010, 09955–03030, 09956–03050)

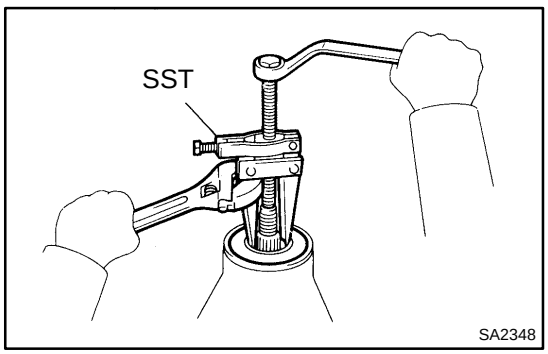

9. REMOVE FRONT OIL SEAL

Using SST, remove the oil seal from the differential carrier.
SST 09308–10010

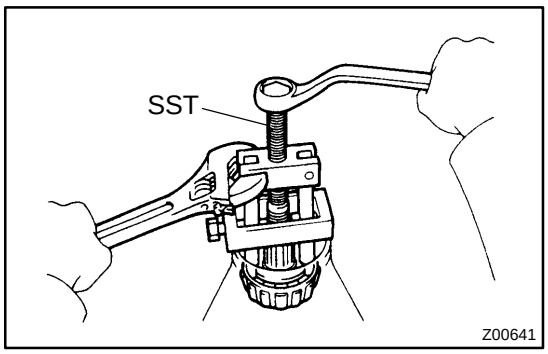

10. REMOVE FRONT BEARING AND BEARING SPACER

(a) Using SST, remove the bearing from the drive pinion.

SST 09556–22010

If the front bearing is damaged or worn, replace the front bearing.

(b) Remove the 2 washers and bearing spacer.

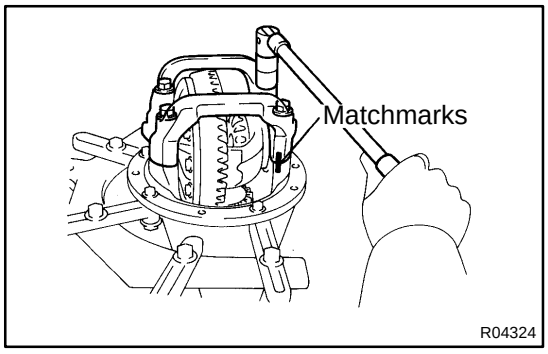

11. REMOVE DIFFERENTIAL CASE

(a) Place matchmarks on the bearing cap and differential carrier.

(b) Remove the 4 bolts and bearing cap.

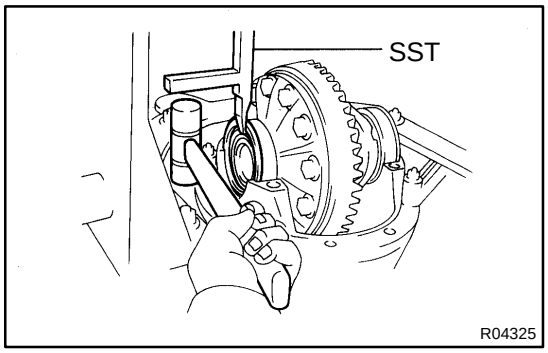

(c) Using SST and a plastic hammer, remove the 2 side bearing plate washers.

SST 09504–22012

HINT:

Measure the plate washer thickness and note it down.

(d) Remove the differential case with the bearing outer races from the carrier.

HINT:

Tag the bearing outer races to show the location for reassembling.

12. REMOVE DRIVE PINION FROM DIFFERENTIAL CARRIER

Remove the drive pinion with the rear bearing.

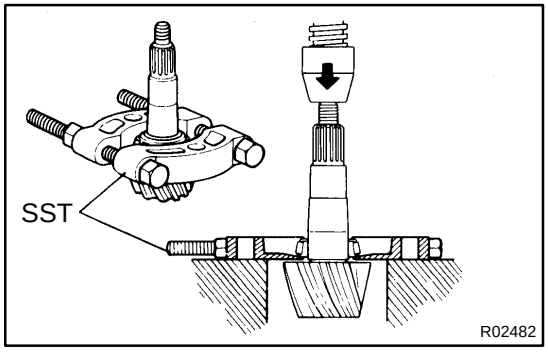

13. REMOVE DRIVE PINION REAR BEARING

Using SST and a press, remove the bearing from the drive pinion.

SST 09950–00020

HINT:

If the drive pinion or ring gear is damaged, replace them as a set.

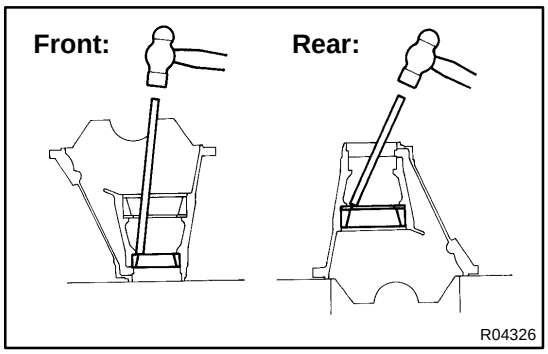

14. REMOVE FRONT AND REAR BEARING OUTER RACES AND ADJUSTING WASHER

NOTICE:

Do not remove the outer races except when replacing the bearings.

Using a brass bar and hammer, remove the outer races and adjusting washer from the carrier.

HINT:

Measure the adjusting washer thickness and note it down.

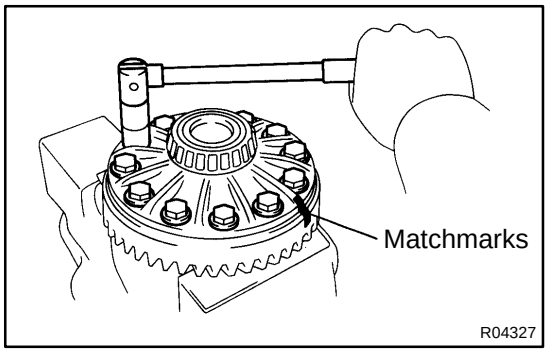

15. REMOVE RING GEAR

(a) Place matchmarks on the ring gear and differential case.

(b) Remove the 12 ring gear set bolts.

(c) Using a plastic hammer, tap on the ring gear to separate it from the differential case.

16. CHECK DIFFERENTIAL CASE RUNOUT

(a) Install the differential case in the differential carrier (See page SA–103).

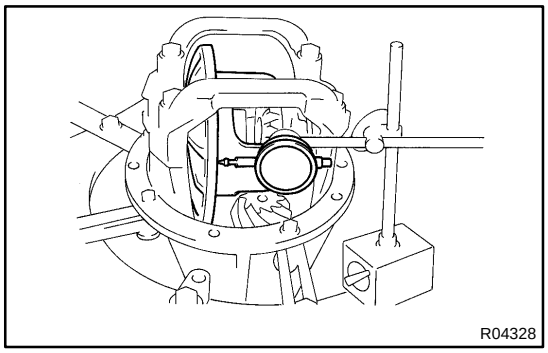

(b) Using a dial indicator, measure the differential case runout.

Maximum case runout: 0.04 mm (0.0016 in.)

(c) Remove the differential case.

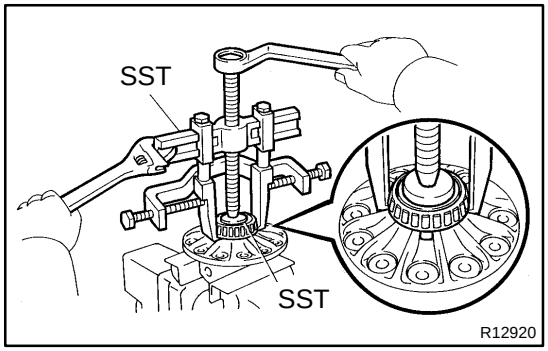

17. REMOVE SIDE BEARINGS

Using SST, remove the 2 side bearings from the differential case.

SST 09950–40011 (09951–04010, 09952–04010, 09953–04020, 09954–04010, 09955–04061, 09957–04010, 09958–04011), 09950–60010 (09951–00480)

HINT:

Fix the claws of SST to the notch in the differential case.

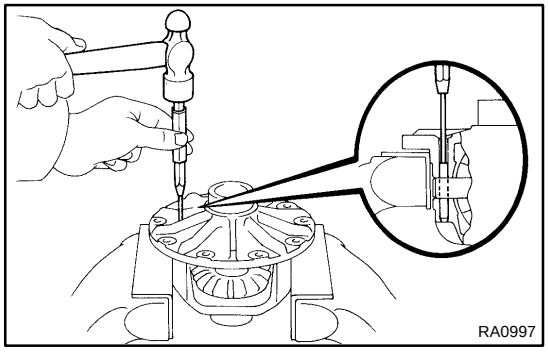

18. DISASSEMBLE DIFFERENTIAL CASE ASSEMBLY

(a) Using a pin punch and hammer, remove the straight pin.

(b) Remove the pinion shaft, 2 pinion gears, pinion gear thrust washers, side gears and side gear thrust washers from the differential case.

SA0BS–03

INSTALLATION

1. INSTALL DIFFERENTIAL CARRIER ASSEMBLY

(a) Install a new gasket.

(b) Install the differential carrier assembly with 10 washers and nuts.

NOTICE:

Be careful not to damage the installation surface.

Torque: 73 N·m (740 kgf·cm, 54 ft·lbf)

2. CONNECT REAR PROPELLER SHAFT

2WD: See page PR–8

4WD: See page PR–15

3. INSTALL REAR AXLE SHAFTS (See page SA–89)

4. FILL DIFFERENTIAL WITH HYPOID GEAR OIL (See page SA–92)

SA0BQ–03

REPLACEMENT

REPLACE COMPANION FLANGE DUST DEFLECTOR

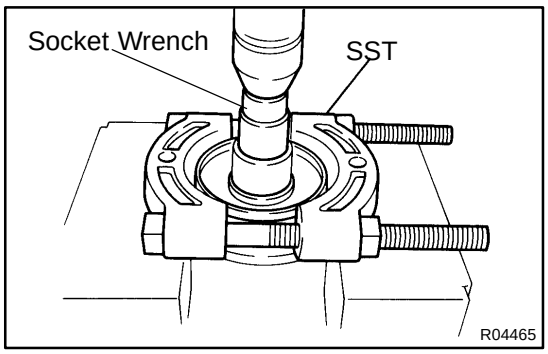

(a) Using SST, a socket wrench and a press, remove the dust deflector.
SST 09950–00020

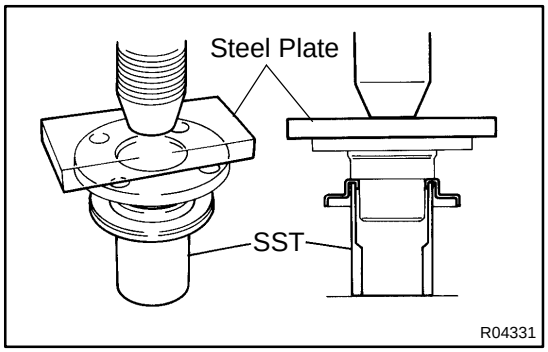

(b) Using SST, a press and steel plate, install a new dust deflector.
SST 09523–36010

SA1GD–05

REASSEMBLY

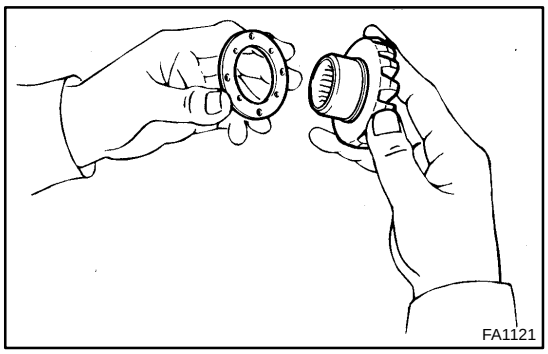

1. ASSEMBLE DIFFERENTIAL CASE

(a) Install the 2 thrust washers to the side gears.

(b) Install the 2 side gears with the thrust washers, 2 pinion gears, 2 pinion gear thrust washers and pinion shaft.

HINT:

Align the holes for the straight pin in the differential case and pinion shaft.

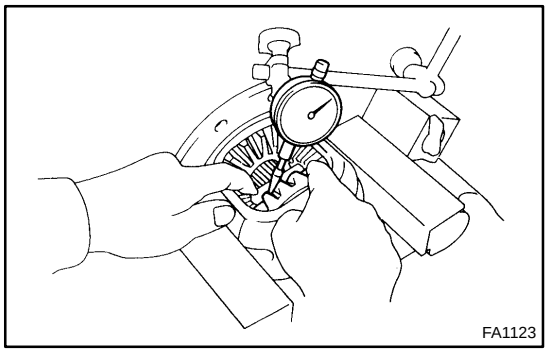

(c) Using a dial indicator, measure the side gear backlash while holding one pinion gear toward the differential case.

Backlash: 0.05 – 0.20 mm (0.0020 – 0.0079 in.)

If the backlash is not within the specified value, replace the side gear thrust washer with one of an appropriate thickness.

HINT:

Refer to the following table to select thrust washers which will ensure that the backlash is within the specified value.

Washer thickness:

Thickness mm (in.)	Thickness mm (in.)
1.50 (0.0590)	1.75 (0.0689)
1.55 (0.0610)	1.80 (0.0709)
1.60 (0.0630)	1.85 (0.0728)
1.65 (0.0650)	1.90 (0.0748)
1.70 (0.0669)	–

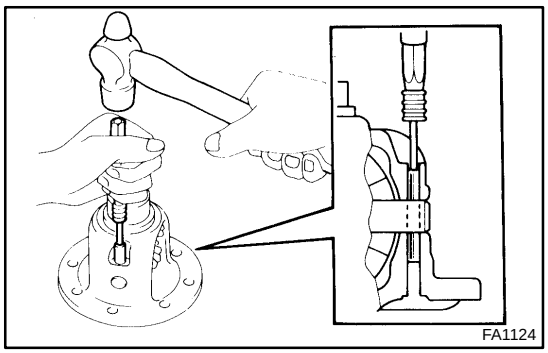

(d) Using a pin punch and hammer, install the straight pin through the holes in the differential case and pinion shaft.

(e) Using a chisel and hammer, stake the outside of the differential case pin hole.

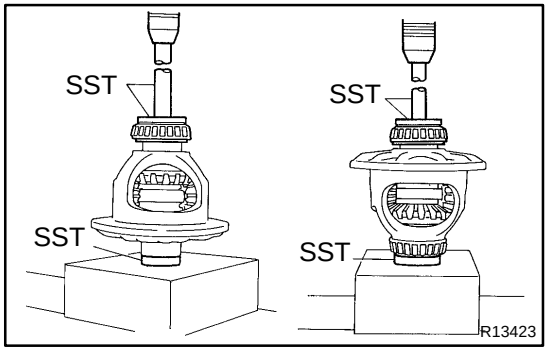

2. INSTALL SIDE BEARINGS

Using SST and a press, install the 2 side bearings into the differential case.

SST 09950–60010 (09951–00480, 09951–00640)
09950–70010 (09951–07150)

3. INSTALL RING GEAR ON DIFFERENTIAL CASE

(a) Clean the contact surfaces of the differential case and ring gear.

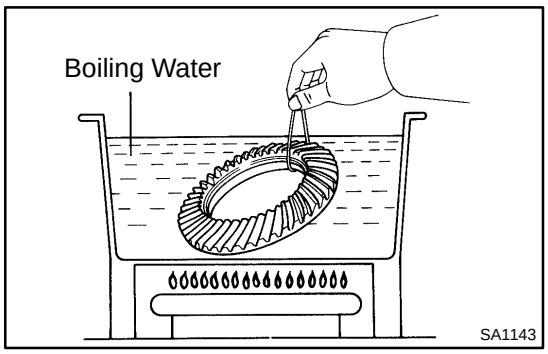

(b) Heat the ring gear to about 100°C (212°F) in boiling water.
(c) Carefully take the ring gear out of the boiling water.

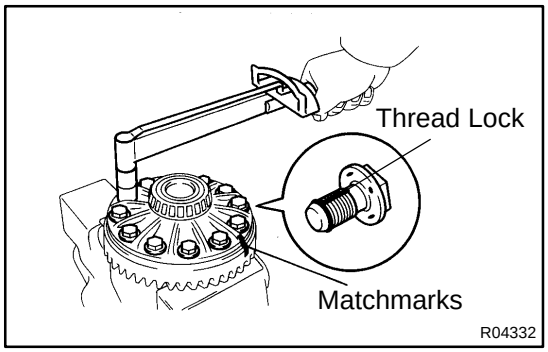

(d) After the moisture on the ring gear has completely evaporated, quickly install the ring gear to the differential case.

HINT:

Align the matchmarks on the ring gear and differential case.

(e) After the ring gear has cooled sufficiently, torque the set bolts to which thread lock has been applied.

Thread lock:
Part No. 08833–00100, THREE BOND 1360K or equivalent.
Torque: 125 N·m (1,270 kgf·cm, 92 ft·lbf)

4. INSPECT RING GEAR RUNOUT

(a) Install the differential case into the carrier and install the plate washers to where there is no play in the bearing (See step 8.).
(b) Install the bearing cap (See step 11.).

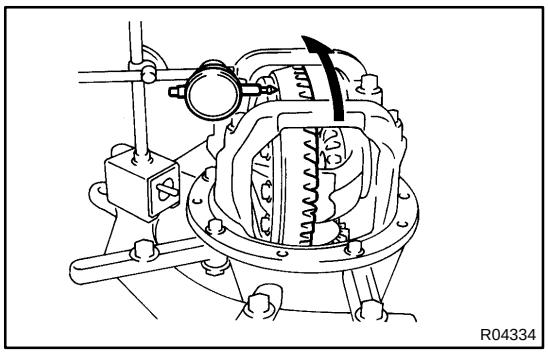

(c) Using a dial indicator, measure the runout of ring gear.
(d) Remove the bearing caps and differential case.
Maximum runout: 0.05 mm (0.0020 in.)

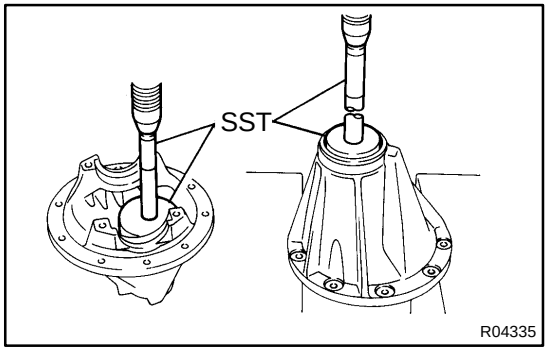

5. INSTALL DRIVE PINION BEARING OUTER RACES AND ADJUSTING WASHER

(a) Using SST and a press, install a new front bearing outer race to the carrier.
SST 09950–60020 (09951–00710),
09950–70010 (09951–07150)
(b) Using SST and a press, install a new adjusting washer and a new rear bearing outer race to the carrier.
SST 09950–60020 (09951–00910),
09950–70010 (09951–07150)

HINT:
First fit a washer with the same thickness as the washer which was removed, then after checking the tooth contact pattern, replace the washer with one of a different thickness if necessary.

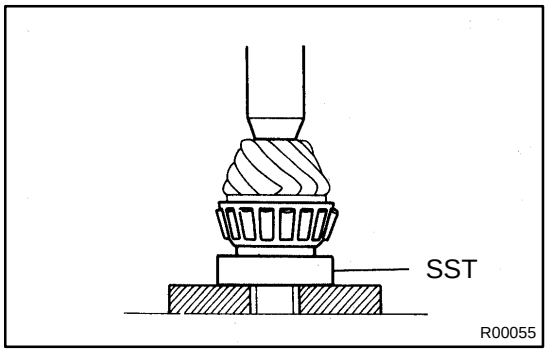

6. INSTALL DRIVE PINION REAR BEARING

Using SST and a press, install the rear bearing onto the drive pinion.

SST 09506–35010

7. TEMPORARILY ADJUST DRIVE PINION PRELOAD

(a) Install the drive pinion and front bearing.

HINT:
After adjusting the ring gear tooth contact pattern, assemble the spacer, washers and oil seal.

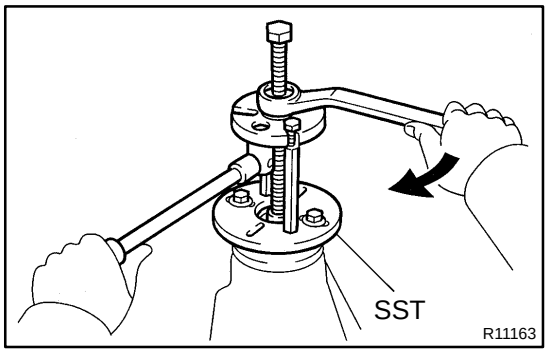

(b) Using SST, install the companion flange.
SST 09950–30012 (09951–03010, 09953–03010, 09954–03010, 09955–03030, 09956–03050)

(c) Coat the threads of the nut with hypoid gear oil.

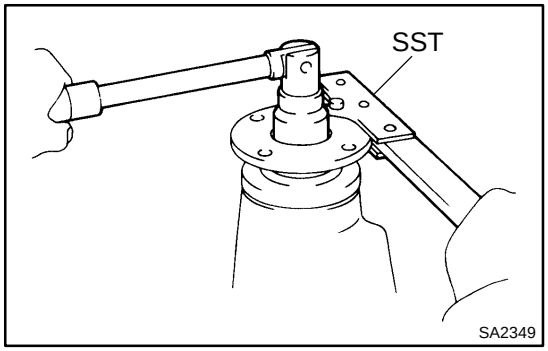

(d) Adjust the drive pinion preload by tightening the companion flange nut.

HINT:
Using SST to hold the flange, torque the nut.
SST 09330–00021

NOTICE:
As there is no spacer, tighten the nut a little at a time and be careful not to overtighten it.

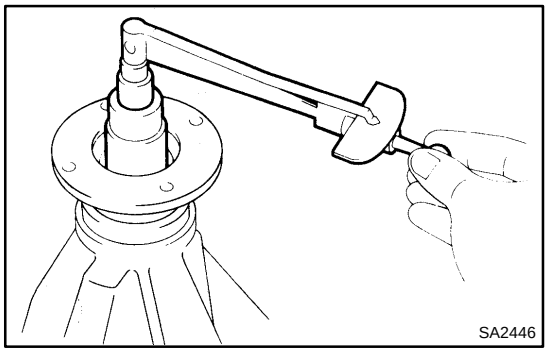

(e) Using a torque wrench, measure the preload of the drive pinion using the backlash between the drive pinion and ring gear.
Preload (at starting):
New bearing
1.3 – 1.9 N·m (13 – 19 kgf·cm, 11.4 – 16.7 in.·lbf)
Reused bearing
0.5 – 0.8 N·m (5 – 8 kgf·cm, 4.3 – 6.9 in.·lbf)

8. INSTALL DIFFERENTIAL CASE IN CARRIER

(a) Place the 2 bearing outer races on their respective bearings. Make sure the right and left races are not interchanged.

(b) Install the differential case in the carrier.

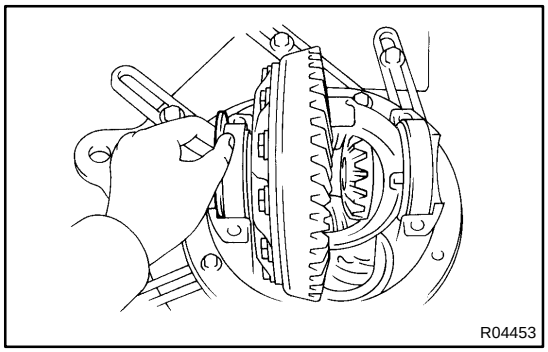

9. ADJUST RING GEAR BACKLASH

(a) Install the plate washer on the ring gear back side.

HINT:

Make sure that the ring gear has backlash.

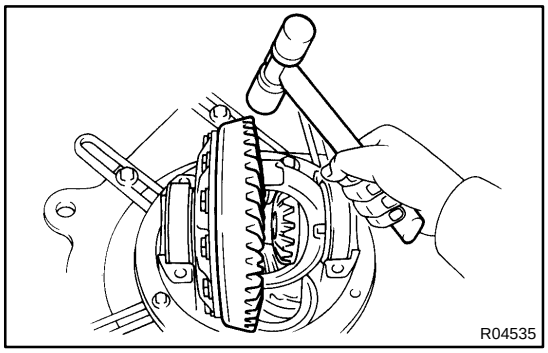

(b) Tap on the ring gear with a plastic hammer so that the washer fits to the bearing.

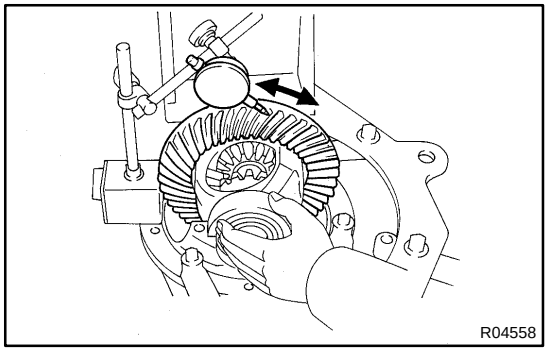

(c) Using a dial indicator, while holding the companion flange, measure the ring gear backlash.

Backlash (reference):
0.13 – 0.18 mm (0.0051 – 0.0071 in.)

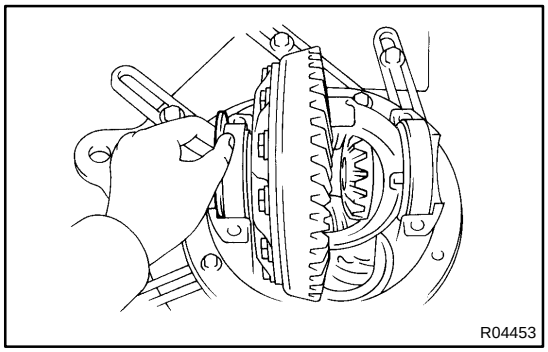

(d) Select a plate washer for back side ring gear using the backlash as a reference.

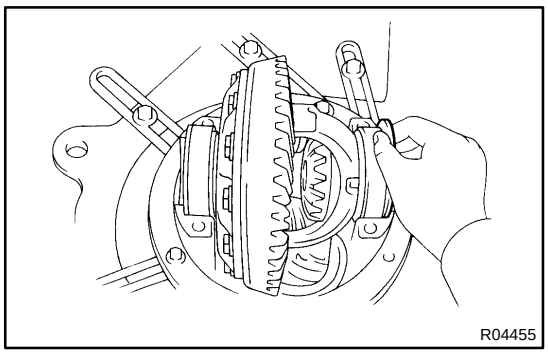
R04455

(e) Select a ring gear teeth side plate washer so that there is no clearance between the outer race and case.
(f) Remove the 2 plate washers and differential case.
(g) Install the plate washer into the ring gear back side of the carrier.

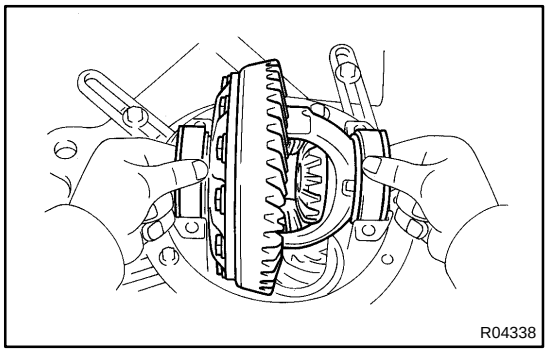
R04338

(h) Place the other plate washer onto the differential case together with the outer race, and install the differential case with the outer race into the carrier.
(i) Tap on the ring gear with a plastic hammer so that the washers fit to the bearing.

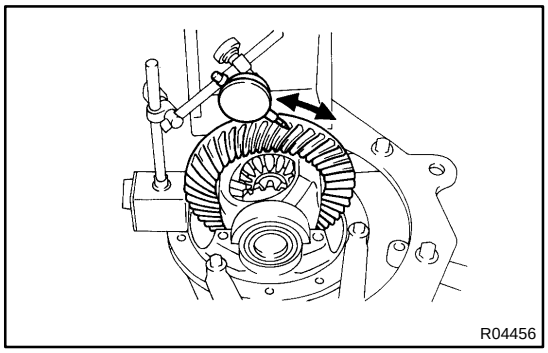
R04456

(j) Using a dial indicator, while holding the companion flange measure the ring gear backlash.
Backlash: 0.13 – 0.18 mm (0.0051 – 0.0071 in.)

If the backlash is not within the specified value, adjust it by either increasing or decreasing the thickness of washers on both sides by an equal amount.
HINT:
There should be no clearance between the plate washer and the case.
Make sure that there is a ring gear backlash.

10. ADJUST SIDE BEARING PRELOAD

(a) Remove the ring gear teeth side plate washer and using a micrometer, measure the thickness.
(b) Using the backlash as a reference, install a new washer 0.06 – 0.09 mm (0.0024 – 0.0035 in.) thicker than the washer removed.

HINT:
Select a washer which can be pressed in 2/3 of the way with your finger.

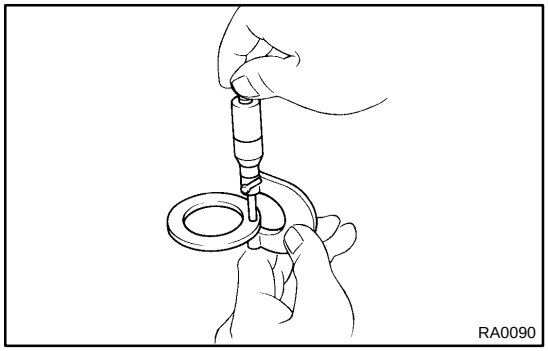
RA0090

(c) Using a plastic hammer, install the plate washer.
(d) Recheck the ring gear backlash.
Backlash: 0.13 – 0.18 mm (0.0051 – 0.0071 in.)

If the backlash is not within the specified value, adjust it by either increasing or decreasing the thickness of washers on both sides by equal amount.
HINT:
The backlash will change by about 0.02 mm (0.0008 in.) corresponding to 0.03 mm (0.0012 in.) change in the plate washer.

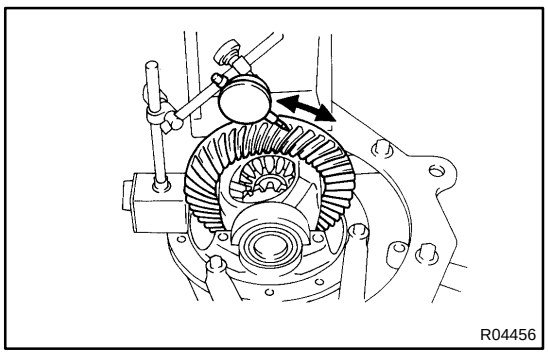
R04456

Washer thickness:

Mark	Thickness mm (in.)	Mark	Thickness mm (in.)	Mark	Thickness mm (in.)
58	2.58 (0.1015)	90	2.90 (0.1142)	22	3.22 (0.1268)
60	2.60 (0.1024)	92	2.92 (0.1150)	24	3.24 (0.1276)
62	2.62 (0.1031)	94	2.94 (0.1157)	26	3.26 (0.1283)
64	2.64 (0.1039)	96	2.96 (0.1165)	28	3.28 (0.1291)
66	2.66 (0.1047)	98	2.98 (0.1173)	30	3.30 (0.1299)
68	2.68 (0.1055)	00	3.00 (0.1181)	32	3.32 (0.1307)
70	2.70 (0.1063)	02	3.02 (0.1189)	34	3.34 (0.1315)
72	2.72 (0.1071)	04	3.04 (0.1197)	36	3.36 (0.1323)
74	2.74 (0.1079)	06	3.06 (0.1205)	38	3.38 (0.1331)
76	2.76 (0.1087)	08	3.08 (0.1213)	40	3.40 (0.1339)
78	2.78 (0.1094)	10	3.10 (0.1220)	42	3.42 (0.1346)
80	2.80 (0.1102)	12	3.12 (0.1228)	44	3.44 (0.1354)
82	2.82 (0.1110)	14	3.14 (0.1236)	46	3.46 (0.1362)
84	2.84 (0.1118)	16	3.16 (0.1244)	48	3.48 (0.1370)
86	2.86 (0.1126)	18	3.18 (0.1252)	–	
88	2.88 (0.1134)	20	3.20 (0.1260)	–	

11. INSTALL BEARING CAP

(a) Align the matchmarks on the cap and carrier.

(b) Install and torque the 4 bolts.

Torque: 113 N·m (1,150 kgf·cm, 83 ft·lbf)

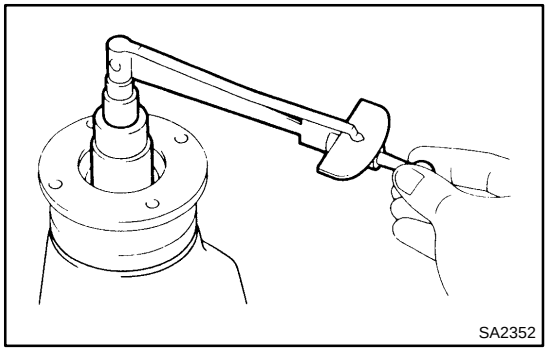

12. MEASURE TOTAL PRELOAD

Using a torque wrench, measure the total preload with the teeth of the drive pinion and ring gear in contact.

Total preload (at starting):

Drive pinion preload plus 0.4 – 0.6 N·m (4 – 6 kgf·cm, 3.5 – 5.2 in.·lbf)

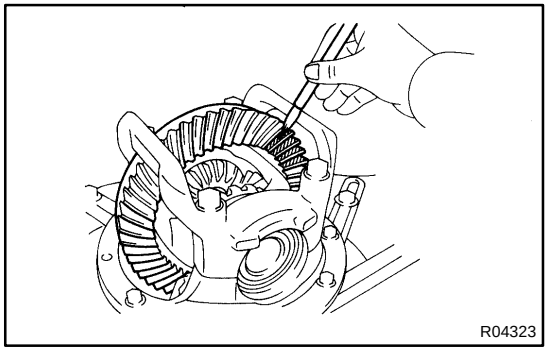

13. INSPECT TOOTH CONTACT BETWEEN RING GEAR AND DRIVE PINION

(a) Coat 3 or 4 teeth at three different positions on the ring gear with red lead primer.

(b) Hold the companion flange firmly and rotate the ring gear in both directions.

(c) Inspect the teeth pattern.

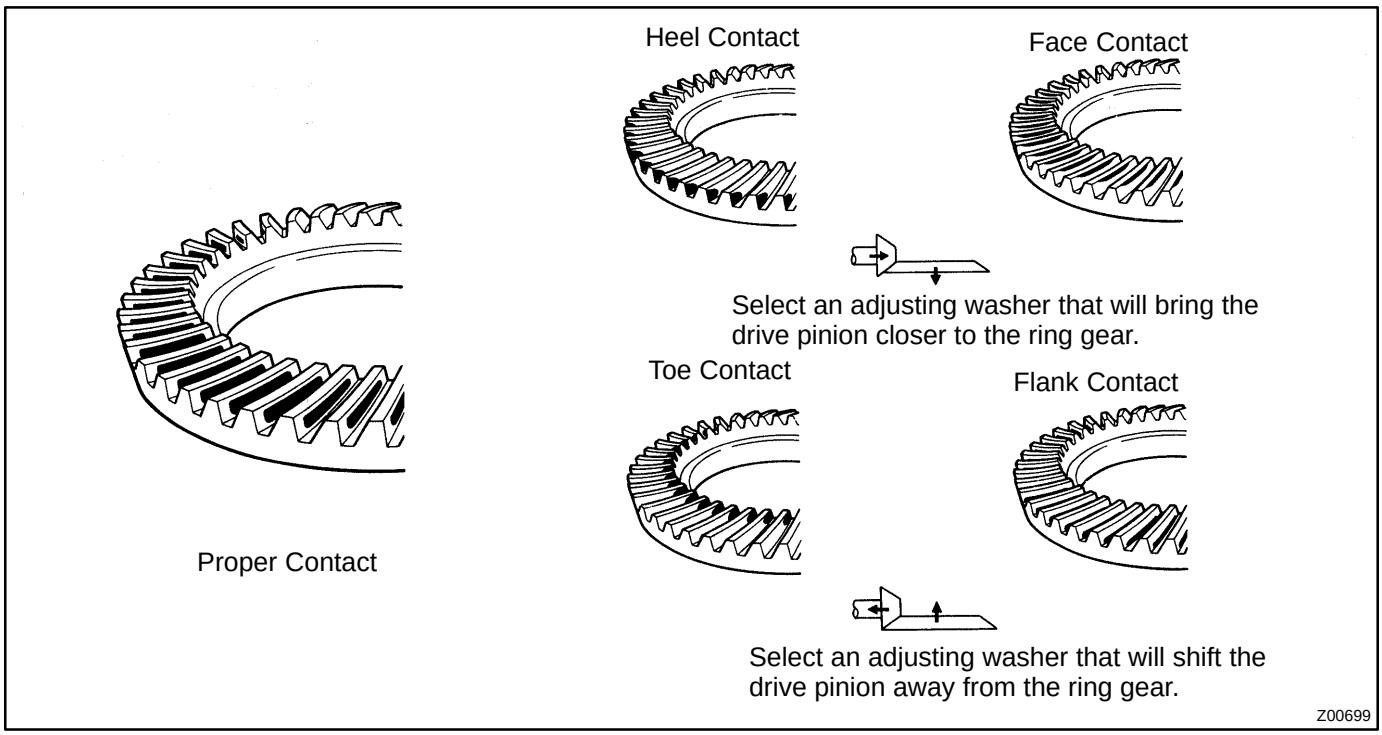

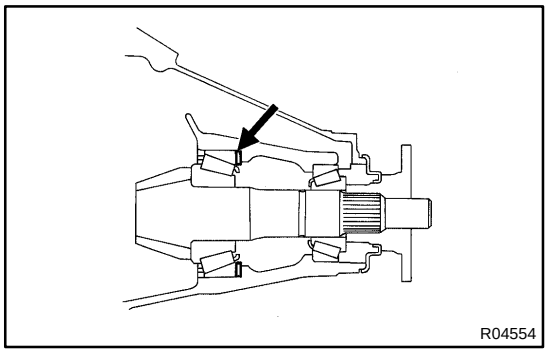

If the teeth are not contacting properly, use the following table to select a proper washer for correction.

Washer thickness:

Mark	Thickness mm (in.)	Mark	Thickness mm (in.)	Mark	Thickness mm (in.)
87	1.87 (0.0736)	01	2.01 (0.0791)	15	2.15 (0.0846)
88	1.88 (0.0740)	02	2.02 (0.0795)	16	2.16 (0.0850)
89	1.89 (0.0744)	03	2.03 (0.0799)	17	2.17 (0.0854)
90	1.90 (0.0748)	04	2.04 (0.0803)	18	2.18 (0.0858)
91	1.91 (0.0752)	05	2.05 (0.0807)	19	2.19 (0.0862)
92	1.92 (0.0756)	06	2.06 (0.0811)	20	2.20 (0.0866)
93	1.93 (0.0760)	07	2.07 (0.0815)	21	2.21 (0.0870)
94	1.94 (0.0764)	08	2.08 (0.0819)	22	2.22 (0.0874)
95	1.95 (0.0768)	09	2.09 (0.0823)	23	2.23 (0.0878)
96	1.96 (0.0772)	10	2.10 (0.0827)	24	2.24 (0.0882)
97	1.97 (0.0776)	11	2.11 (0.0831)	25	2.25 (0.0886)
98	1.98 (0.0780)	12	2.12 (0.0835)	26	2.26 (0.0890)
99	1.99 (0.0783)	13	2.13 (0.0839)	27	2.27 (0.0894)
00	2.00 (0.0787)	14	2.14 (0.0843)	28	2.28 (0.0898)

14. REMOVE COMPANION FLANGE (See page SA–98)

15. REMOVE FRONT BEARING (See page SA–98)

16. INSTALL NEW BEARING SPACER, 2 WASHERS AND FRONT BEARING

(a) Install a new bearing spacer and 2 washers, and place the front bearing.

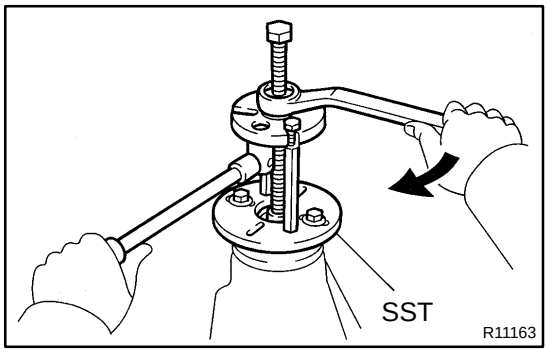

(b) Using SST and the companion flange, install the front bearing then remove the companion flange.

SST 09950–30012 (09951–03010, 09953–03010, 09954–03010, 09955–03030, 09956–03050)

17. INSTALL NEW OIL SEAL

(a) Coat a new oil seal lip with MP grease.

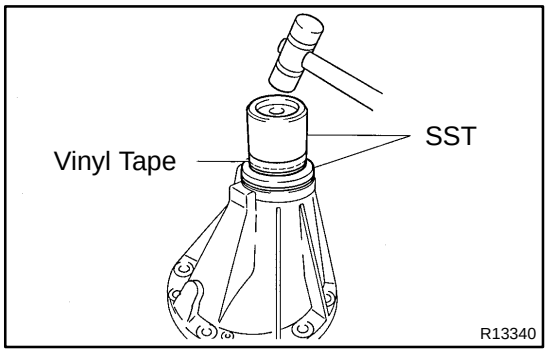

(b) Using SST and a plastic hammer, install the oil seal until its surface is flush with the differential carrier end.

SST 09316–12010, 09649–17010

HINT:

Connect 2 SST with vinyl tape.

18. INSTALL COMPANION FLANGE

(a) Place the companion flange.

(b) Coat the threads of a new nut with hypoid gear oil.

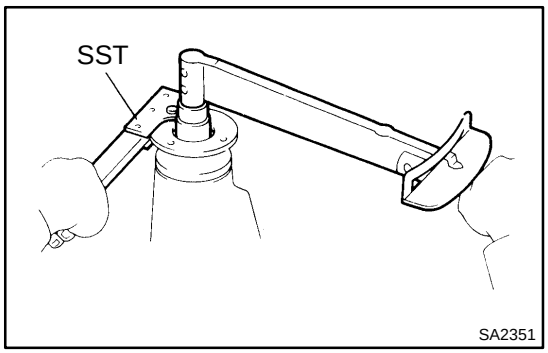

(c) Using SST to hold the flange, torque the nut.

SST 09330–00021

Torque: 147 N·m (1,500 kgf·cm, 109 ft·lbf)

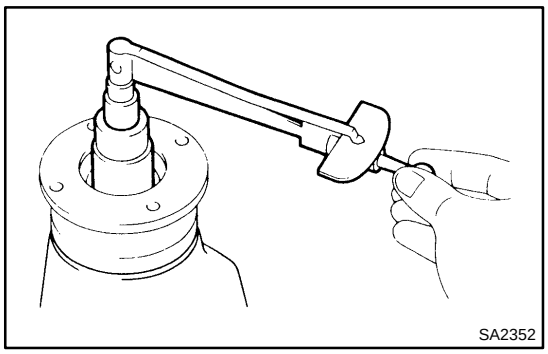

19. ADJUST DRIVE PINION PRELOAD

Using a torque wrench, measure the preload of the drive pinion using the backlash between the drive pinion and ring gear.

Preload (at starting):
New bearing
1.3 – 1.9 N·m (13 – 19 kgf·cm, 11.4 – 16.7 in.·lbf)
Reused bearing
0.5 – 0.8 N·m (5 – 8 kgf·cm, 4.3 – 6.9 in.·lbf)

If the preload is greater than the specified value, replace the bearing spacer.

If the preload is less than the specified value, retighten the nut with a force of 13 N·m (130 kgf·cm, 9 ft·lbf) at a time until the specified preload is reached.

Torque: 451 N·m (4,600 kgf·cm, 333 ft·lbf) or less

If the maximum torque is exceeded while retightening the nut, replace the bearing spacer and repeat the preload procedure. Do not loosen the pinion nut to reduce the preload.

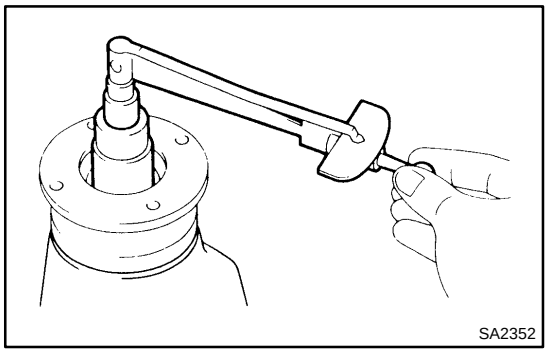

20. CHECK TOTAL PRELOAD

Using a torque wrench, measure the total preload with the teeth of the drive pinion and ring gear in contact.

Total preload (at starting):
Drive pinion preload plus 0.4 – 0.6 N·m (4 – 6 kgf·cm, 3.5 – 5.2 in.·lbf)

21. CHECK RING GEAR BACKLASH

Using a dial indicator, measure the ring gear backlash.

Backlash: 0.13 – 0.18 mm (0.0051 – 0.0071 in.)

22. RECHECK TOOTH CONTACT BETWEEN RING GEAR AND DRIVE PINION (See step 13.)

23. CHECK COMPANION FLANGE RUNOUT (See page SA–98)

24. STAKE DRIVE PINION NUT

REAR DIFFERENTIAL CARRIER (w/ LSD)

COMPONENTS

SA28M–01

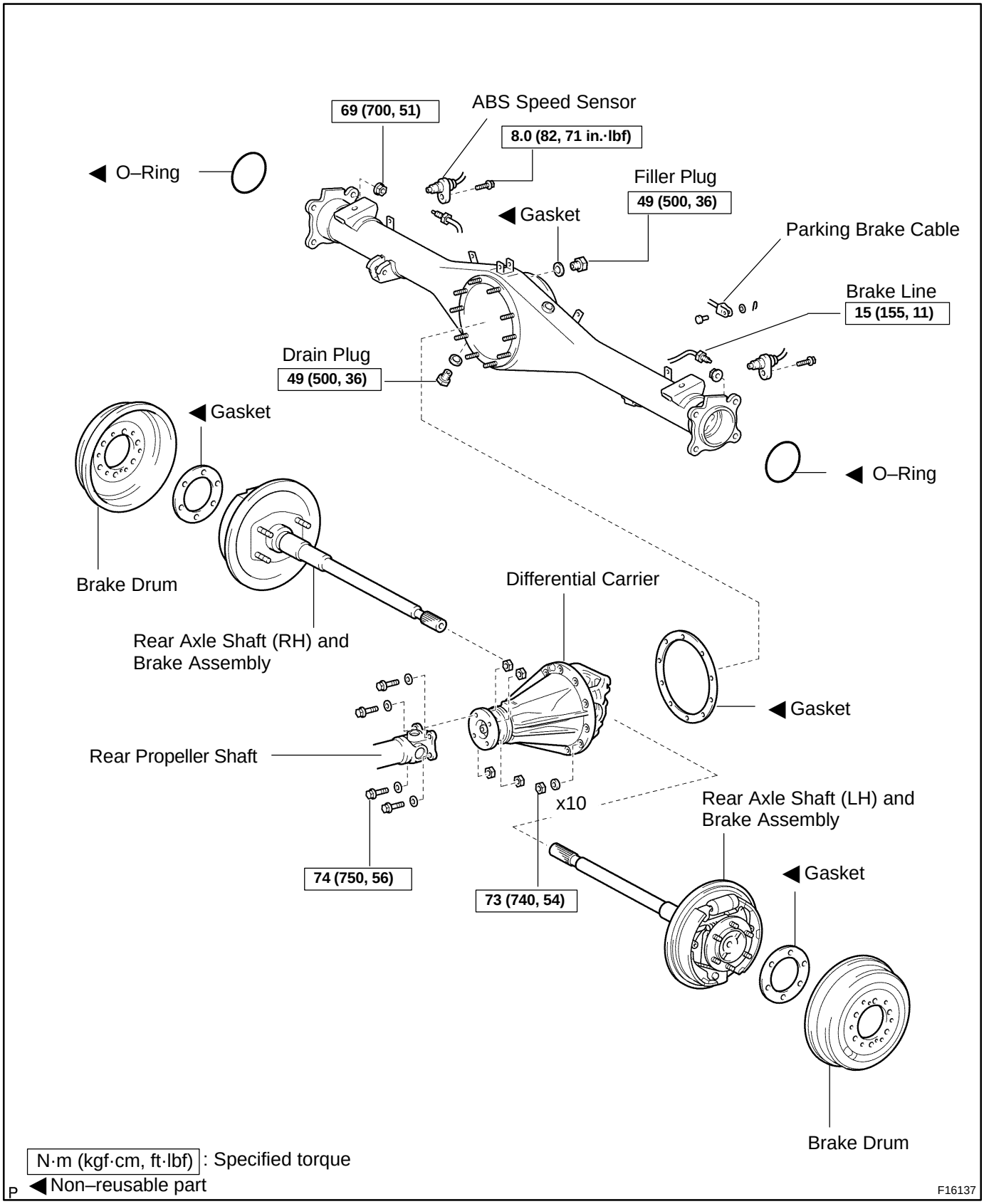

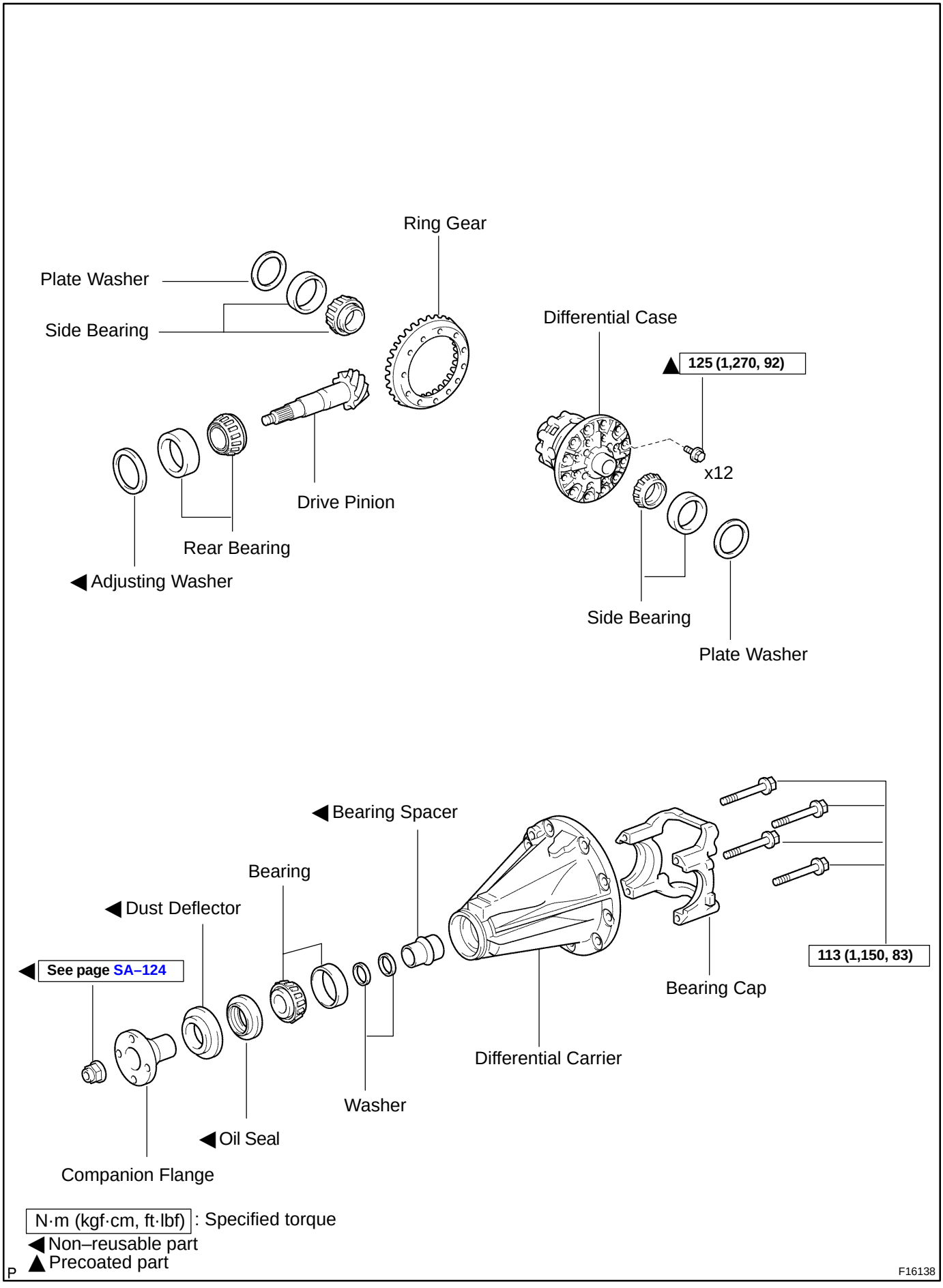
Ring Gear
Plate Washer
Side Bearing
Drive Pinion
Rear Bearing
◀ Adjusting Washer
Differential Case
▲ 125 (1,270, 92)
x12
Side Bearing
Plate Washer
◀ Bearing Spacer
Bearing
◀ Dust Deflector
◀ See page SA–124
Companion Flange
◀ Oil Seal
Washer
Differential Carrier
Bearing Cap
113 (1,150, 83)
N·m (kgf·cm, ft·lbf) : Specified torque
◀ Non–reusable part
▲ Precoated part
P
F16138

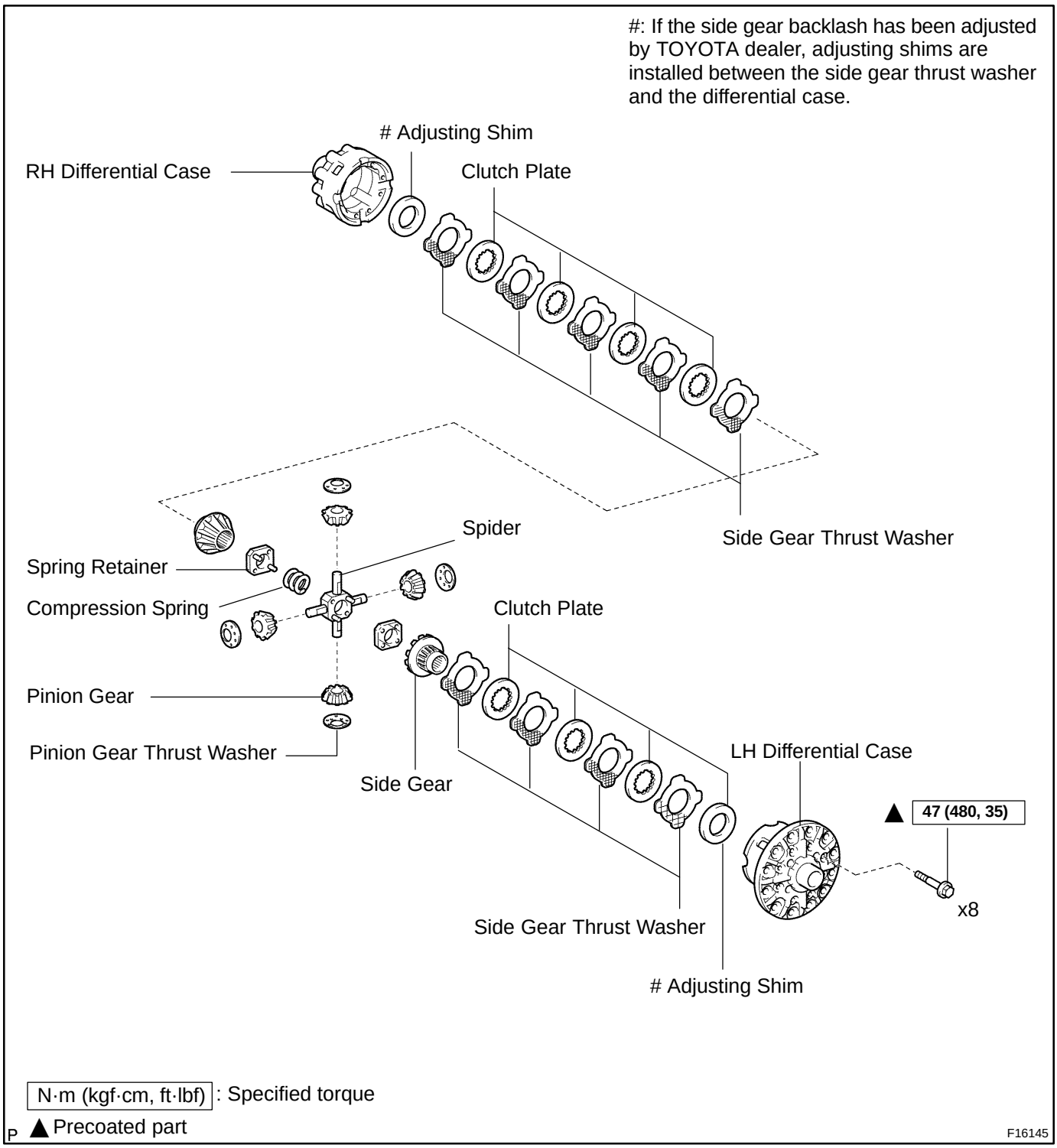
#: If the side gear backlash has been adjusted by TOYOTA dealer, adjusting shims are installed between the side gear thrust washer and the differential case.
Adjusting Shim
RH Differential Case
Clutch Plate
Side Gear Thrust Washer
Spider
Spring Retainer
Compression Spring
Clutch Plate
Pinion Gear
Pinion Gear Thrust Washer
Side Gear
LH Differential Case
▲ 47 (480, 35)
x8
Side Gear Thrust Washer
Adjusting Shim
N·m (kgf·cm, ft·lbf) : Specified torque
▲ Precoated part
F16145

SA28N–01

REMOVAL

1. **DRAIN HYPOID GEAR OIL**
2. **REMOVE REAR AXLE SHAFTS (See page SA–84)**
3. **DISCONNECT REAR PROPELLER SHAFT**
   2WD: See page PR–3
   4WD: See page PR–10

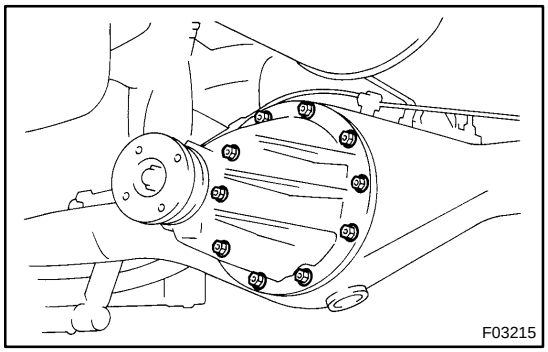

4. **REMOVE DIFFERENTIAL CARRIER ASSEMBLY**

(a) Remove the 10 nuts, washers and differential carrier assembly.

NOTICE:

Be careful not to damage the installation surface.

(b) Remove the gasket.

SA28O–01

DISASSEMBLY

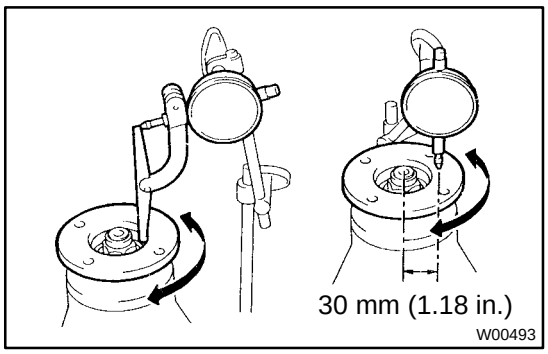

1. CHECK RUNOUT OF COMPANION FLANGE

Using a dial indicator, measure the vertical and lateral runout of the companion flange.

Maximum runout: 0.09 mm (0.0035 in.)

If the runout is not within the specification, replace the companion flange.

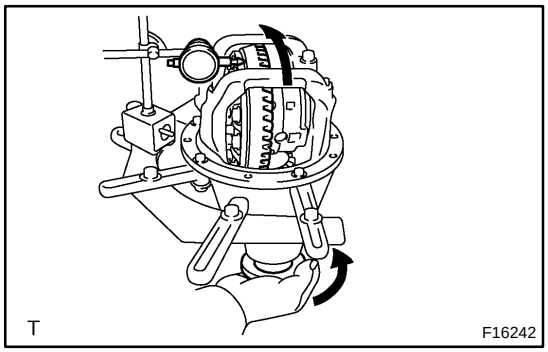

2. CHECK RING GEAR RUNOUT

Using a dial indicator, measure the ring gear runout.

Maximum runout: 0.05 mm (0.0020 in.)

If the runout is not within the specification, replace the ring gear.

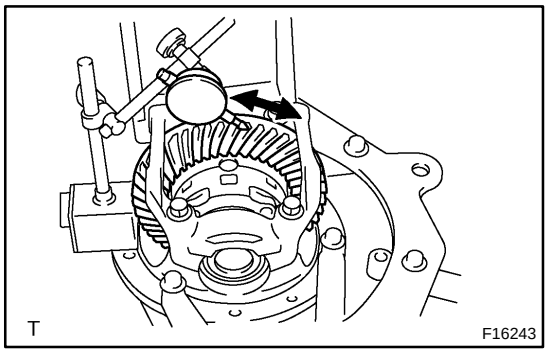

3. CHECK RING GEAR BACKLASH

Using a dial indicator, while holding the companion flange, measure the ring gear backlash.

Backlash: 0.13 – 0.18 mm (0.0051 – 0.0071 in.)

HINT:

Measure at 3 or more positions around the circumference of the ring gear.

If the backlash is not within the specification, adjust the side bearing preload or repair if necessary.

4. CHECK TOOTH CONTACT BETWEEN RING GEAR AND DRIVE PINION (See page SA–124)

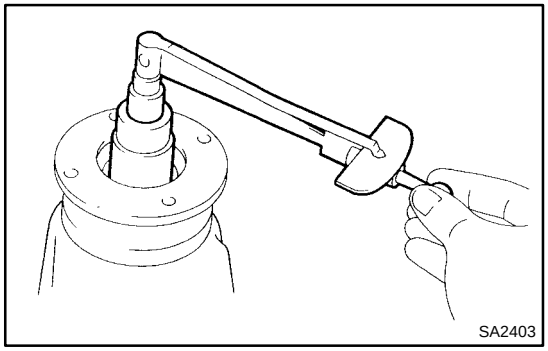

5. MEASURE DRIVE PINION PRELOAD

Using a torque wrench, measure the drive pinion preload using the backlash of the drive pinion and ring gear.

Preload (at starting):

0.6 – 0.9 N·m (6.1 – 9.2 kgf·cm, 5.3 – 8.0 in.·lbf)

6. CHECK TOTAL PRELOAD

Using a torque wrench, measure the preload with the teeth of the drive pinion and ring gear in contact.

Total preload (at starting):
Drive pinion preload plus
0.4 – 0.6 N·m (4 – 6 kgf·cm, 3.5 – 5.2 in.·lbf)

If necessary, disassemble and inspect a differential.

7. REMOVE COMPANION FLANGE

(a) Using a chisel and a hammer, unstake the nut.

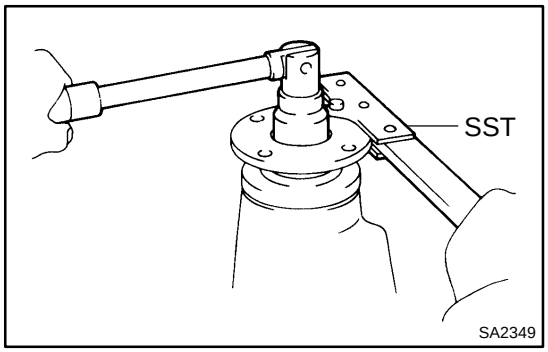

(b) Using SST to hold the flange, remove the nut.
SST 09330–00021

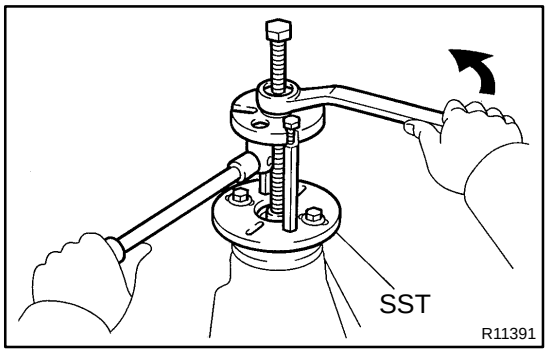

(c) Using SST, remove the companion flange.
SST 09950–30012 (09951–03010, 09953–03010, 09954–03010, 09955–03030, 09956–03030)

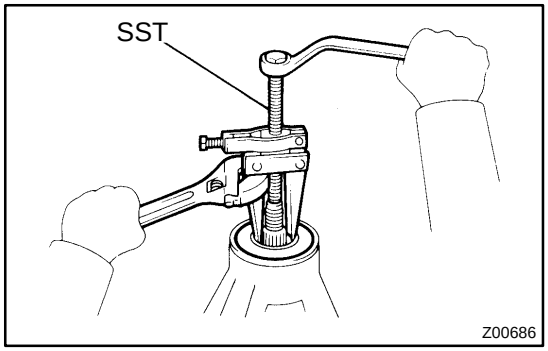

8. REMOVE FRONT OIL SEAL

Using SST, remove the oil seal from the differential carrier.
SST 09308–10010

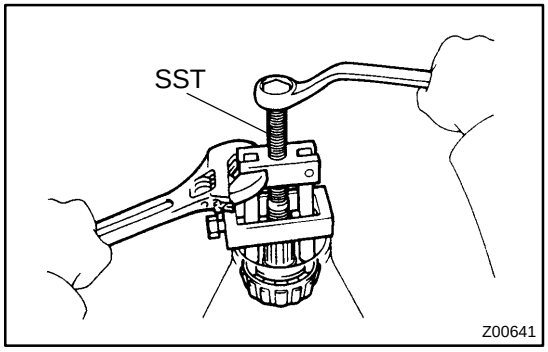

9. REMOVE FRONT BEARING AND BEARING SPACER

(a) Using SST, remove the bearing from the drive pinion.
SST 09556–22010

If the front bearing is damaged or worn, replace the front bearing.

(b) Remove the 2 washers and bearing spacer.

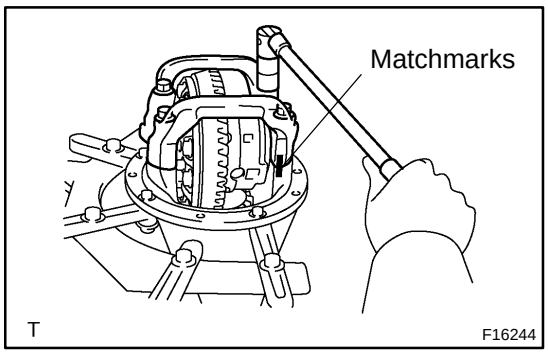

10. REMOVE DIFFERENTIAL CASE

(a) Place matchmarks on the bearing cap and differential carrier.

(b) Remove the 4 bolts and bearing cap.

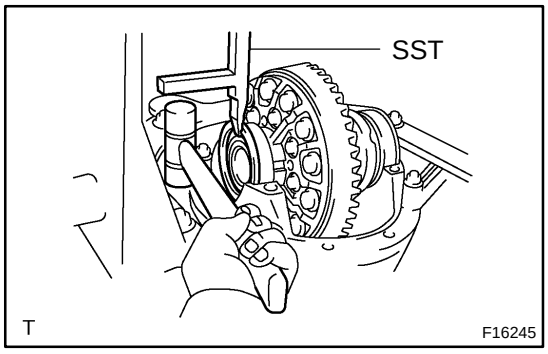

(c) Using SST and a plastic hammer, remove the 2 side bearing plate washers.

SST 09504–22012

HINT:

Measure the plate washer thickness and note it down.

(d) Remove the differential case with the bearing outer races from the carrier.

HINT:

Tag the disassembled parts to show the location for reassembling.

11. REMOVE DRIVE PINION FROM DIFFERENTIAL CARRIER

Remove the drive pinion with the rear bearing.

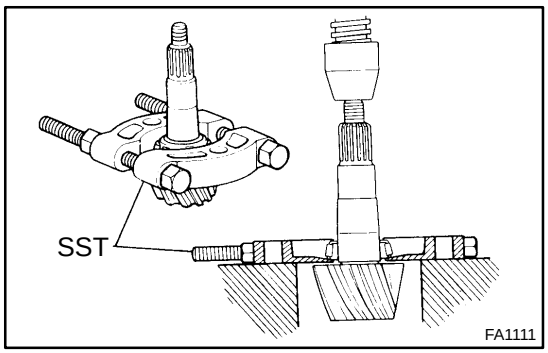

12. REMOVE DRIVE PINION REAR BEARING

Using SST and a press, remove the bearing from the drive pinion.

SST 09950–00020

HINT:

If the drive pinion or ring gear is damaged, replace them as a set.

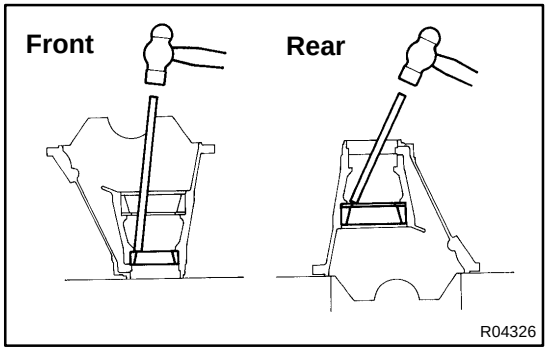

13. REMOVE FRONT AND REAR BEARING OUTER RACES AND ADJUST WASHER

NOTICE:

Do not remove the outer races except when replacing the bearings.

Using a brass bar and hammer, remove the outer races and adjusting washer from the carrier.

HINT:

Measure the adjusting washer thickness and note it down.

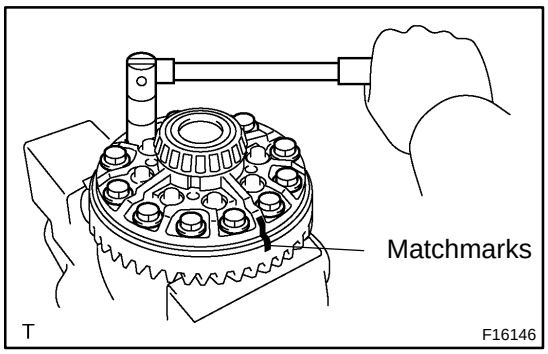

14. REMOVE RING GEAR

(a) Place matchmarks on the ring gear and differential case.
(b) Remove the 12 ring gear set bolts.
(c) Using a plastic hammer, tap on the ring gear to separate it from the differential case.

15. CHECK DIFFERENTIAL CASE RUNOUT

(a) Install the differential case in the differential carrier (See page SA–124).

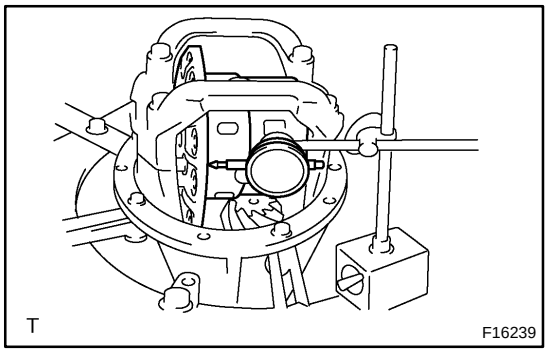

(b) Using a dial indicator, measure the differential case runout.
Maximum case runout: 0.04 mm (0.0016 in.)
(c) Remove the differential case.

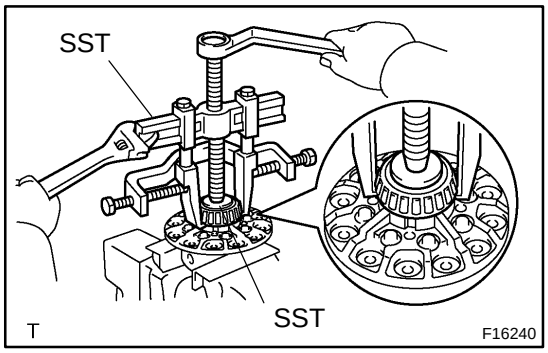

16. REMOVE SIDE BEARINGS

Using SST, remove the 2 side bearings from the differential case.

SST 09950–40011 (09951–04010, 09952–04010, 09953–04020, 09954–04010, 09955–04061, 09957–04010, 09958–04011), 09950–60010 (09951–00480)

HINT:
Fix the claws of SST to the notch in the differential case.

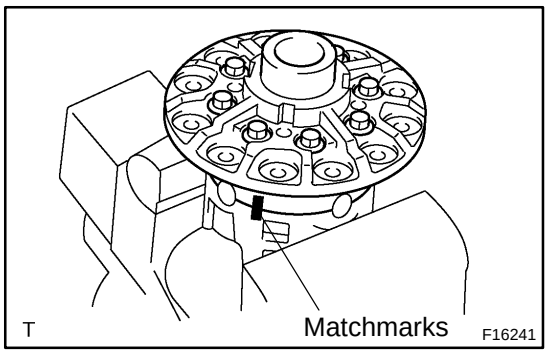

17. DISASSEMBLE DIFFERENTIAL CASE

(a) Place matchmarks on the LH and RH cases.
(b) Remove the 8 bolts uniformly, a little at a time.
(c) Using a plastic hammer, separate the LH and RH cases.

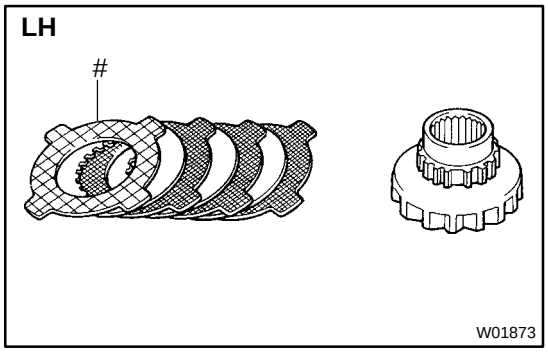

18. REMOVE THESE PARTS FROM DIFFERENTIAL LH AND RH CASES:

HINT:
Keep the disassembled parts in order.

(a) Remove these parts from the LH case.
  (1) Remove the side gear.
  (2) Remove the 4 side gear thrust washers.
  (3) Remove the 3 clutch plates.

HINT:
Face the rough side of the thrust washer marked by ”#” to the differential case.

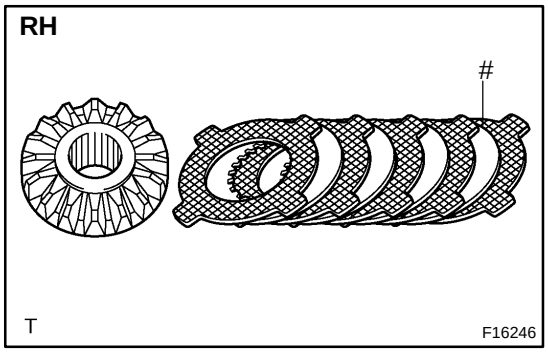

(b) Remove these parts from the RH case.
(1) Remove the spring LH retainer.
(2) Remove the compression spring.
(3) Remove the spider with pinion gear.
(4) Remove the spring RH retainer.
(5) Remove the side gear.
(6) Remove the 5 side gear thrust washers.
(7) Remove the 4 clutch plates.

HINT:
Face the rough side of the thrust washer marked by ”#” to the differential case.

SA161–06

INSPECTION

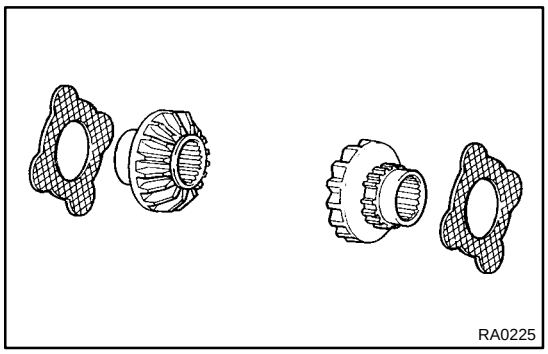
RA0225

1. REPLACE PARTS THAT ARE DAMAGED OR WORN

HINT:

If replacing the side gear, also replace the thrust washer that contacts with it.

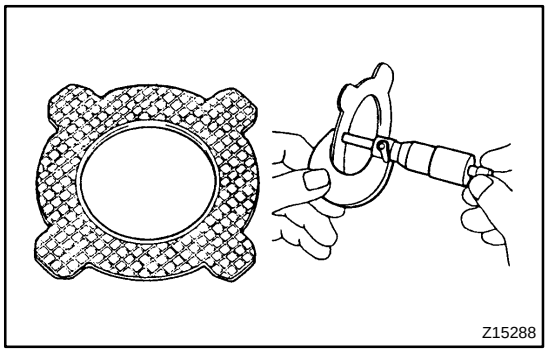
Z15288

2. INSPECT SIDE GEAR THRUST WASHERS FOR WEAR OR DAMAGE

Using a micrometer, measure that the contact surface of the thrust washer is even and check that no bare metal is showing.

Thickness (For reference):
1.77 – 2.49 mm (0.0697 – 0.0980 in.)

If necessary, replace the thrust washers.

HINT:

If replacing the thrust washer, also replace the clutch plate that contacts with it.

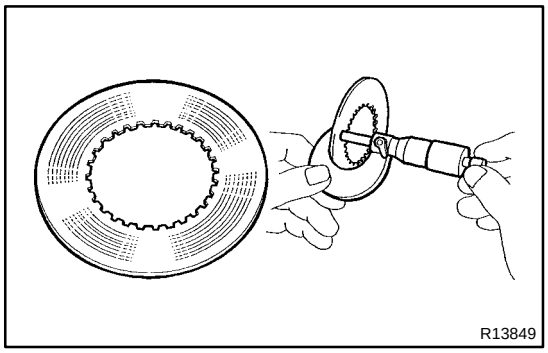
R13849

3. INSPECT CLUTCH PLATE FOR WEAR OR DAMAGE

Using a micrometer, measure the contact surface of the clutch plate and check that there is no abnormal wear.

Thickness (For reference):
1.57 – 1.63 mm (0.0618 – 0.0642 in.)

If necessary, replace the clutch plate.

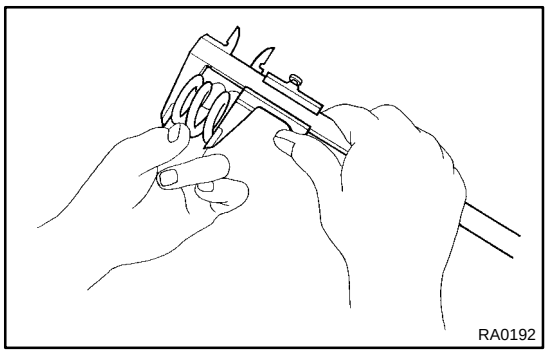
RA0192

4. INSPECT COMPRESSION SPRING FREE LENGTH

Using vernier calipers, measure the free length of the spring.

Length (For reference): 26.4 mm (1.039 in.)

SA162–06

REPLACEMENT

REPLACE COMPANION FLANGE DUST DEFLECTOR

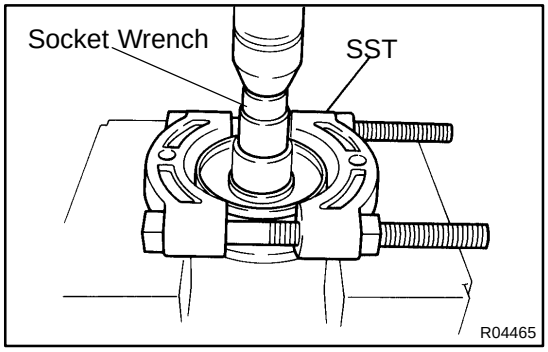

(a) Using SST, a socket wrench and a press, remove the dust deflector.
SST 09950–00020

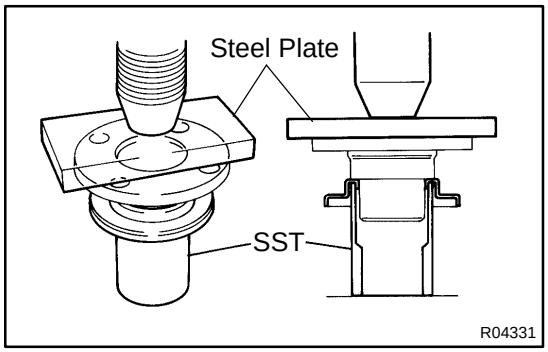

(b) Using SST, a press and steel plate, install a new dust deflector.
SST 09523–36010

SA28P–01

REASSEMBLY

HINT:

- ▲ When reusing the side gear, thrust washers and clutch plates, skip the STEP 1.
- ▲ Using a shop rag, clean off any foreign object from the parts.
- ▲ Apply all of the sliding and rotating surfaces with LSD oil.

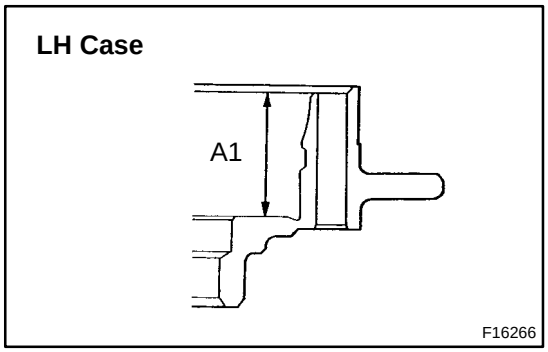

1. LH side:
SELECT ADJUSTING SHIM(S)

(a) Measure the differential case dimension ”A1”, as shown in the illustration.

(b) Install the thrust washers (face their fine side to the side gear) and clutch plates on the side gear.

HINT:

Install the new thrust washer (Mark N) instead of the thrust washers (Mark A – M) to the differential case side.

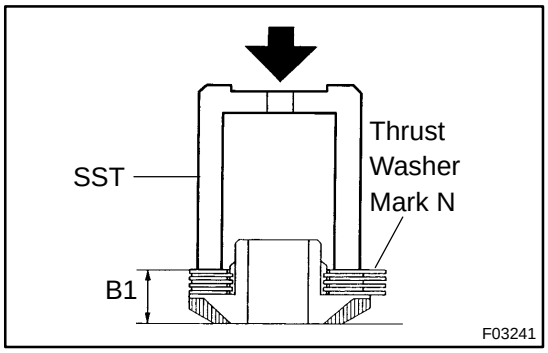

(c) Using SST to press down the thrust washers and clutch plates with about pressure of 10 kgf (22 lbf), measure dimension ”B1”, as shown in the illustration.
SST 09649–17010

(d) Referring to the following selection table on the next page, select the proper adjusting shim(s).
Adjusting shim thickness =
A1 – B1 – 16.175 mm (0.63681 in.)

LH Side

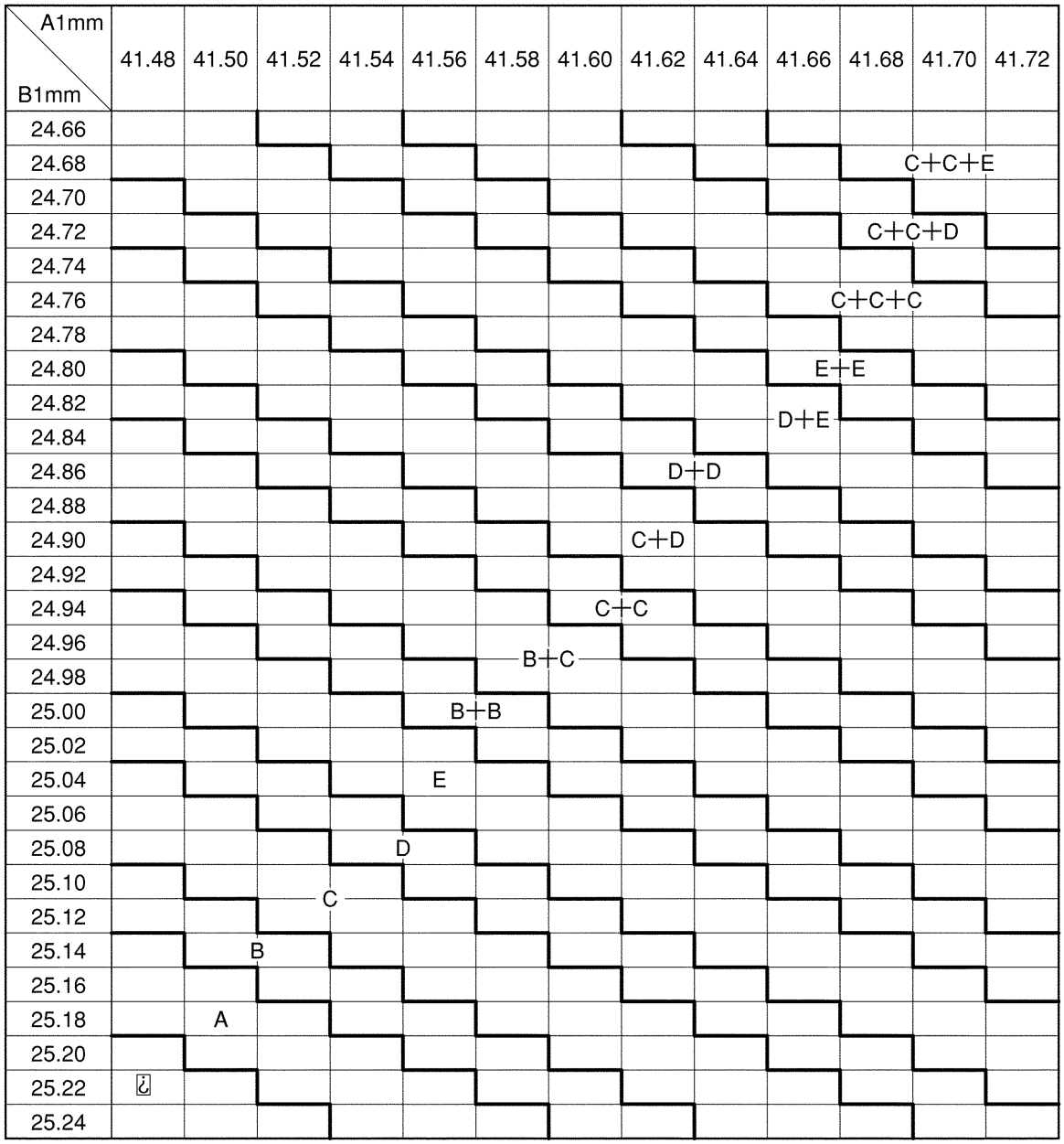

¿ Reassemble another type shim or check the backlash after assembling A shim.

P F16254

HINT:
Three or two adjusting shims can be used together if the total of their thickness meets the one of the above combinations, even if the combination does not exist in the above table

	Adjusting shim mark and thickness mm (in.)
A	0.15 (0.0059)
B	0.20 (0.0079)
C	0.25 (0.0098)
D	0.30 (0.0118)
E	0.35 (0.0138)

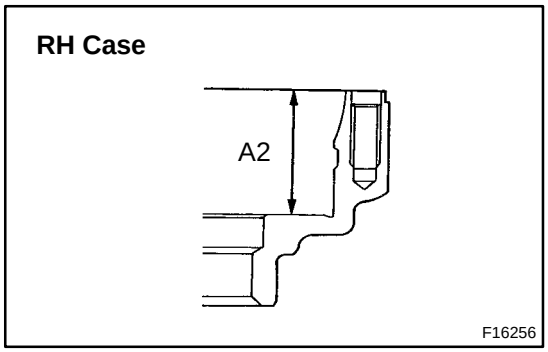

2. RH side:

SELECT ADJUSTING SHIM(S)

(a) Measure the differential case dimension ”A2”, as shown in the illustration.

(b) Install the thrust washers (face their fine side to the side gear) and clutch plates on the side gear.

HINT:

Install the new thrust washer (Mark N) instead of the thrust washers (Mark A – M) to the differential case side.

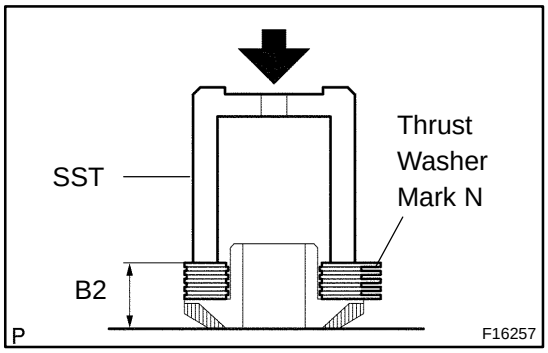

(c) Using SST to press down the thrust washers and clutch plates with about pressure of 10 kgf (22 lbf), measure dimension ”B2”, as shown in the illustration.

SST 09649–17010

(d) Referring to the following selection table on the next page, select the proper adjusting shim(s).

Adjusting shim thickness =

A2 – B2 – 16.175 mm (0.63681 in.)

RH Side

A2mm / B2mm	44.88	44.90	44.92	44.94	44.96	44.98	45.00	45.02	45.04	45.06	45.08	45.10	45.12
28.00											D+D+D		
28.02													
28.04													
28.06											C+C+E		
28.08													
28.10										C+C+D			
28.12													
28.14									C+C+C				
28.16													
28.18									E+E				
28.20								D+E					
28.22													
28.24								D+D					
28.26													
28.28							C+D						
28.30						C+C							
28.32													
28.34					B+C								
28.36													
28.38					B+B								
28.40													
28.42													
28.44					E								
28.46				D									
28.48													
28.50			C										
28.52													
28.54			B										
28.56													
28.58		A											
28.60													
28.62													
28.64													
28.66		¿											
28.68													
28.70													
28.72	Less												

¿ Reassemble another type shim or check the backlash after assembling A shim.

HINT:
Three or two adjusting shims can be used together if the total of their thickness meets the one of the above combinations, even if the combination does not exist in the above table.

	Adjusting shim mark and thickness mm (in.)
A	0.15 (0.0059)
B	0.20 (0.0079)
C	0.25 (0.0098)
D	0.30 (0.0118)
E	0.35 (0.0138)

3. CHECK SIDE GEAR BACKLASH

(a) Install the clutch plates, thrust washers and side gear to the LH and RH differential cases.

HINT:
If necessary, install the adjusting shim(s).

(b) Install the 4 pinion gears and thrust washers to the spider.

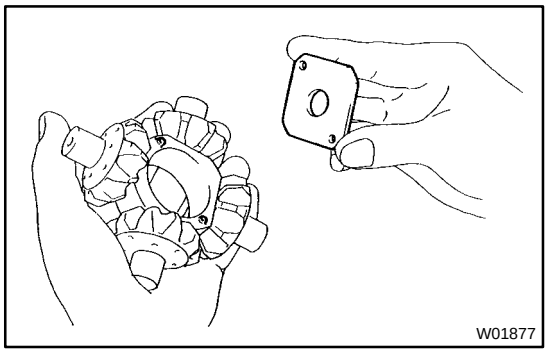
W01877

(c) Align the spring LH retainer holes with the spider knock pins and install the LH retainer.

(d) Install the pinion gear and spider to the differential LH case.

HINT:
Install the spider to the LH case tightly and do not move the spring retainer.

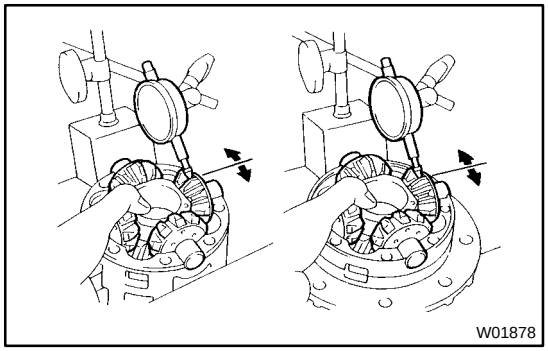
W01878

(e) Using a dial indicator, check the side gear backlash with holding the side gear and spider.
Backlash: 0.05 – 0.20 mm (0.0019 – 0.0079 in.)

HINT:
▲ Measure at all 4 locations.
▲ Measure the backlash at the LH case and at the RH case.
If the backlash is not within the specification, select the adjusting shim(s).

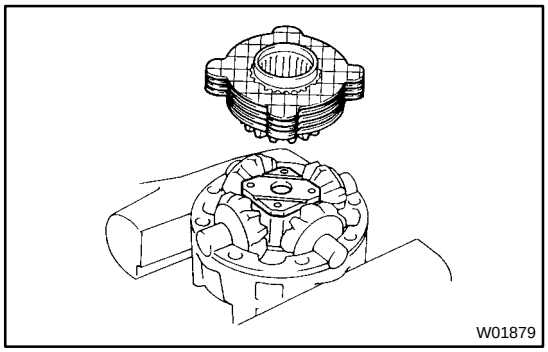
W01879

4. ASSEMBLE DIFFERENTIAL CASE

(a) Reinstall the spider and spring LH retainer to the differential LH case.

HINT:
Install the spider to the LH case tightly and do not move the spring retainer.

(b) Install the compression spring and spring RH retainer.

(c) Install the side gear, thrust washers and clutch plates.

(d) Align the matchmarks and assemble the RH and LH cases.

HINT:
Be careful not to drop the side gear and check the pinion and side gear alignment.

(e) Tighten the 8 bolts uniformly, a little at a time.
Torque: 47 N·m (480 kgf·cm, 35 ft·lbf)

5. MEASURE ROTATION TORQUE OF DIFFERENTIAL CASE

While holding one of the side gear, measure the rotation torque of the other gear

Rotation torque (standard):
27.5 – 43.0 N·m (281 – 439 kgf·cm, 20 – 32 ft·lbf)

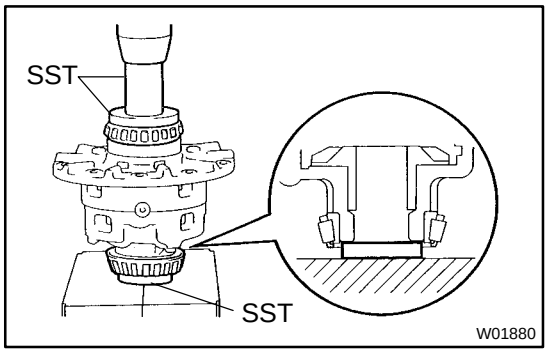

6. INSTALL SIDE BEARINGS

Using SST and a press, install the 2 side bearings into the differential case.

SST 09950–60010 (09951–00480, 09951–00640)
09950–70010 (09951–07150)

7. INSTALL RING GEAR ON DIFFERENTIAL CASE

(a) Clean the contact surfaces of the differential case and ring gear.

(b) Heat the ring gear to about 100˚C (212˚F) in boiling water.

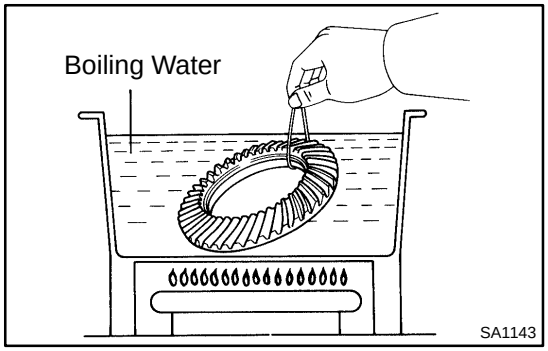

(c) Carefully take the ring gear out of the boiling water.

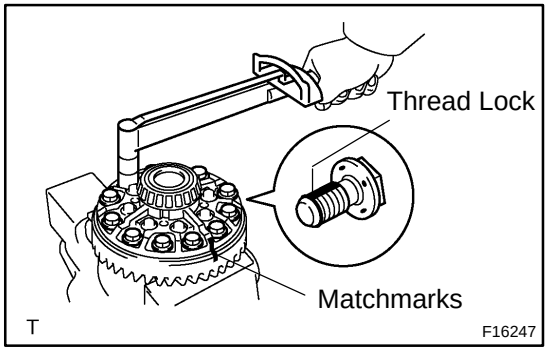

(d) After the moisture on the ring gear has completely evaporated, quickly install the ring gear to the differential case.

HINT:
Align the matchmarks on the ring gear and differential case.

(e) After the ring gear has cooled sufficiently, torque the set bolts to which thread lock has been applied.
Thread lock:
Part No. 08833–00100, THREE BOND 1360K or equivalent.
Torque: 125 N·m (1,270 kgf·cm, 92 ft·lbf)

8. INSPECT RING GEAR RUNOUT

(a) Install the differential case into the carrier and install the plate washers to where there is no play in the bearing (See step 12.).

(b) Install the bearing cap (See step 15.).

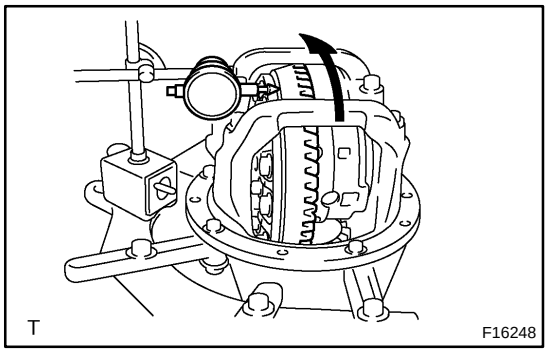

(c) Using a dial indicator, measure the runout of ring gear.

(d) Remove the bearing caps and differential case.

Maximum runout: 0.05 mm (0.0020 in.)

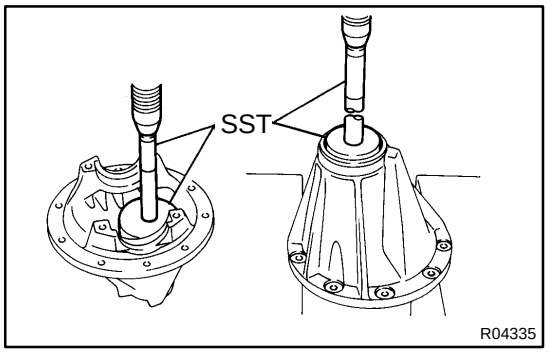

9. INSTALL DRIVE PINION BEARING OUTER RACES AND ADJUSTING WASHER

(a) Using SST and a press, install a new front bearing outer race to the carrier.

SST 09950–60020 (09951–00710), 09950–70010 (09951–07150)

(b) Using SST and a press, install a new adjusting washer and a new rear bearing outer race to the carrier.

SST 09950–60020 (09951–00910), 09950–70010 (09951–07150)

HINT:

First fit a washer with the same thickness as the washer which was removed, then after checking the tooth contact pattern, replace the washer with one of a different thickness if necessary.

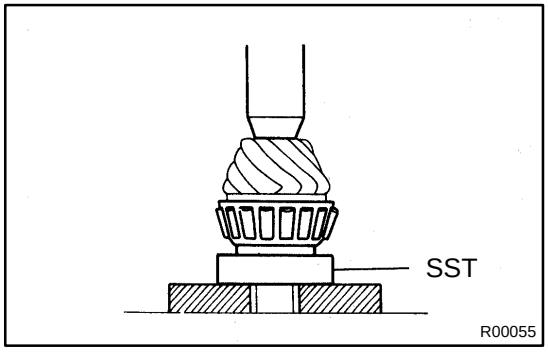

10. INSTALL DRIVE PINION REAR BEARING

Using SST and a press, install the rear bearing onto the drive pinion.

SST 09506–35010

11. TEMPORARILY ADJUST DRIVE PINION PRELOAD

(a) Install the drive pinion and front bearing.

HINT:

After adjusting the ring gear tooth contact pattern, assemble the spacer, washers and oil seal.

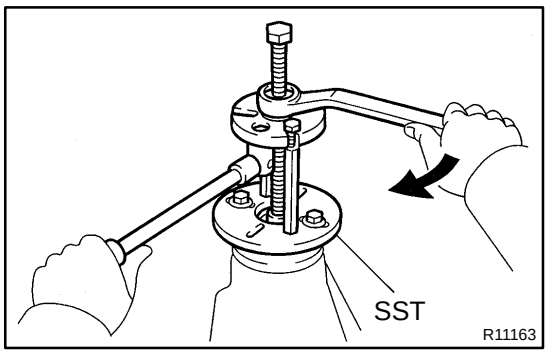

(b) Using SST, install the companion flange.
SST 09950–30012 (09951–03010, 09953–03010, 09954–03010, 09955–03030, 09956–03050)

(c) Coat the threads of the nut with hypoid gear oil.

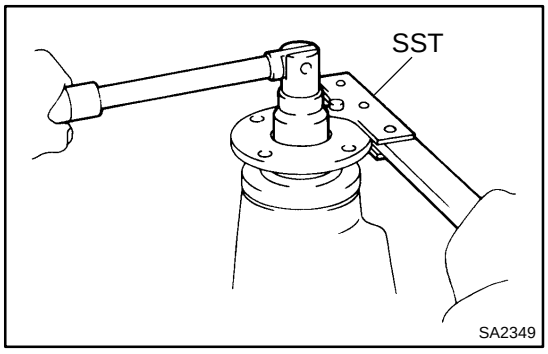

(d) Adjust the drive pinion preload by tightening the companion flange nut.

HINT:

Using SST to hold the flange, torque the nut.
SST 09330–00021

NOTICE:

As there is no spacer, tighten the nut a little at a time and be careful not to overtighten it.

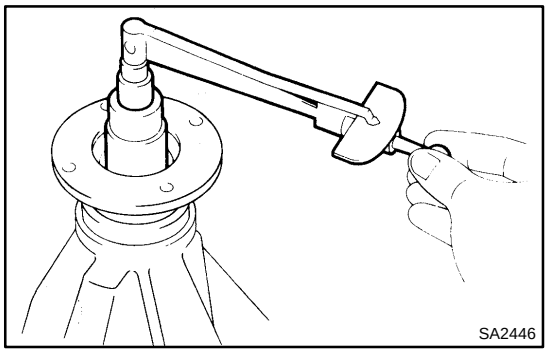

(e) Using a torque wrench, measure the preload of the drive pinion using the backlash between the drive pinion and ring gear.
Preload (at starting):
New bearing
1.3 – 1.9 N·m (13 – 19 kgf·cm, 11.4 – 16.7 in.·lbf)
Reused bearing
0.6 – 0.9 N·m (6.1 – 9.2 kgf·cm, 5.3 – 8.0 in.·lbf)

12. INSTALL DIFFERENTIAL CASE IN CARRIER

(a) Place the 2 bearing outer races on their respective bearings. Make sure the right and left races are not interchanged.

(b) Install the differential case in the carrier.

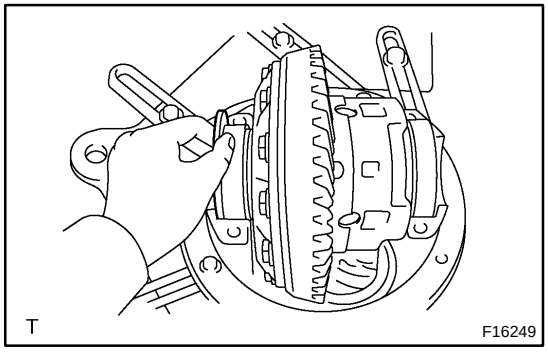

13. ADJUST RING GEAR BACKLASH

(a) Install the plate washer on the ring gear back side.

HINT:

Make sure that the ring gear has backlash.

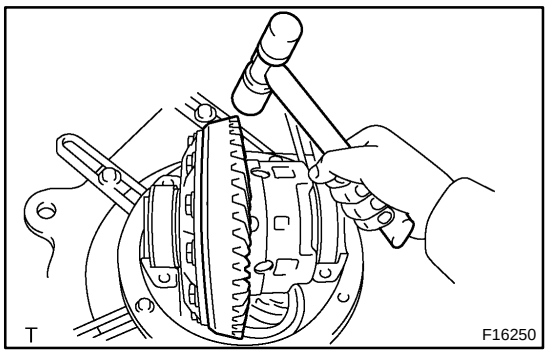

(b) Tap on the ring gear with a plastic hammer so that the washer fits to the bearing.

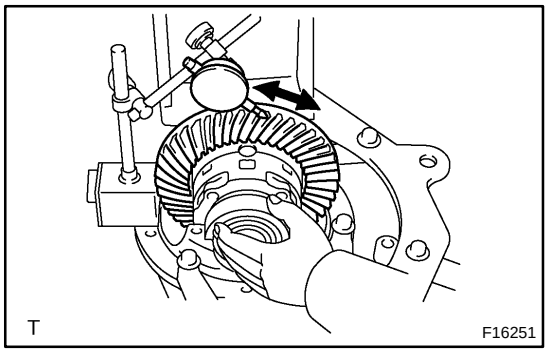

(c) Using a dial indicator, while holding the companion flange, measure the ring gear backlash.
Backlash (reference):
0.13 – 0.18 mm (0.0051 – 0.0071 in.)

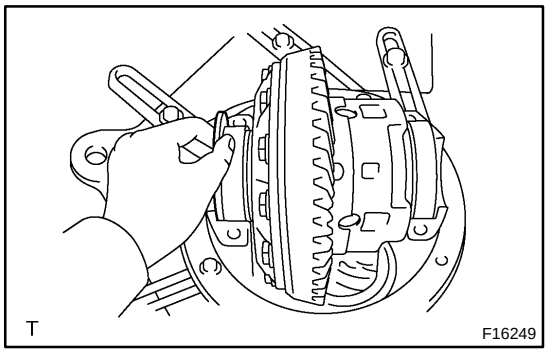

(d) Select a plate washer for back side ring gear using the backlash as a reference.

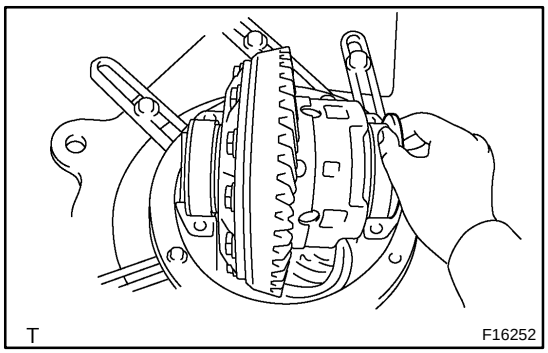

(e) Select a ring gear teeth side plate washer so that there is no clearance between the outer race and case.
(f) Remove the 2 plate washers and differential case.
(g) Install the plate washer into the ring gear back side of the carrier.

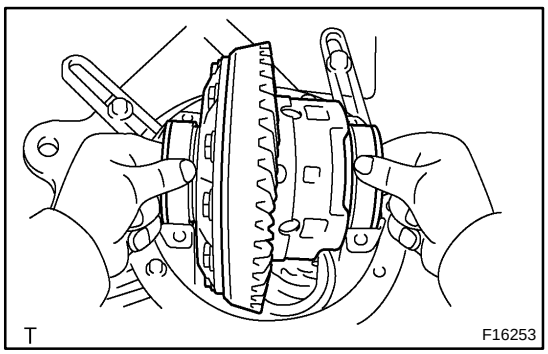

(h) Place the other plate washer onto the differential case together with the outer race, and install the differential case with the outer race into the carrier.
(i) Tap on the ring gear with a plastic hammer so that the washers fit to the bearing.

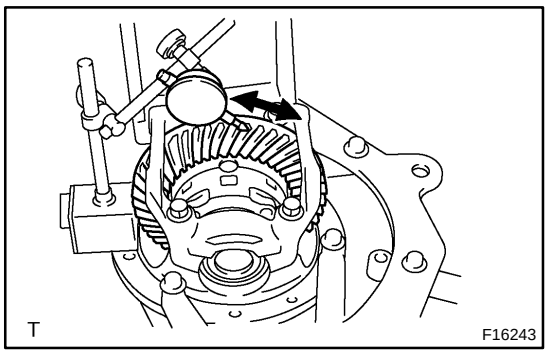

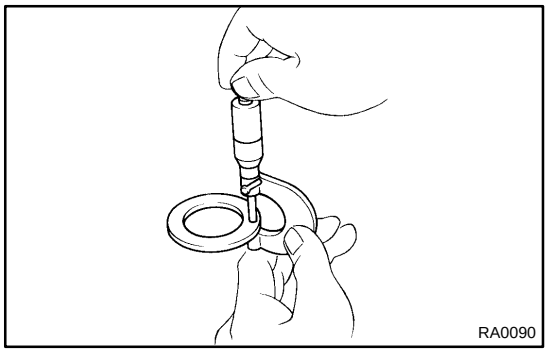

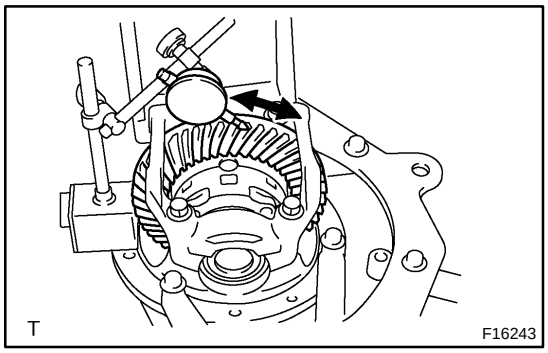

(j) Using a dial indicator, while holding the companion flange measure the ring gear backlash.

Backlash: 0.13 – 0.18 mm (0.0051 – 0.0071 in.)

If the backlash is not within the specified value, adjust it by either increasing or decreasing the thickness of washers on both sides by an equal amount.

HINT:

There should be no clearance between the plate washer and the case.

Make sure that there is a ring gear backlash.

14. ADJUST SIDE BEARING PRELOAD

(a) Remove the ring gear teeth side plate washer and using a micrometer, measure the thickness.

(b) Using the backlash as a reference, install a new washer 0.06 – 0.09 mm (0.0024 – 0.0035 in.) thicker than the washer removed.

HINT:

Select a washer which can be pressed in 2/3 of the way with your finger.

(c) Using a plastic hammer, install the plate washer.

(d) Recheck the ring gear backlash.

Backlash: 0.13 – 0.18 mm (0.0051 – 0.0071 in.)

If the backlash is not within the specified value, adjust it by either increasing or decreasing the thickness of washers on both sides by equal amount.

HINT:

The backlash will change by about 0.02 mm (0.0008 in.) corresponding to 0.03 mm (0.0012 in.) change in the plate washer.

Washer thickness:

Thickness		Thickness		Thickness	
Mark	mm (in.)	Mark	mm (in.)	Mark	mm (in.)
58	2.58 (0.1015)	90	2.90 (0.1142)	22	3.22 (0.1268)
60	2.60 (0.1024)	92	2.92 (0.1150)	24	3.24 (0.1276)
62	2.62 (0.1031)	94	2.94 (0.1157)	26	3.26 (0.1283)
64	2.64 (0.1039)	96	2.96 (0.1165)	28	3.28 (0.1291)
66	2.66 (0.1047)	98	2.98 (0.1173)	30	3.30 (0.1299)
68	2.68 (0.1055)	00	3.00 (0.1181)	32	3.32 (0.1307)
70	2.70 (0.1063)	02	3.02 (0.1189)	34	3.34 (0.1315)
72	2.72 (0.1071)	04	3.04 (0.1197)	36	3.36 (0.1323)
74	2.74 (0.1079)	06	3.06 (0.1205)	38	3.38 (0.1331)
76	2.76 (0.1087)	08	3.08 (0.1213)	40	3.40 (0.1339)
78	2.78 (0.1094)	10	3.10 (0.1220)	42	3.42 (0.1346)
80	2.80 (0.1102)	12	3.12 (0.1228)	44	3.44 (0.1354)
82	2.82 (0.1110)	14	3.14 (0.1236)	46	3.46 (0.1362)
84	2.84 (0.1118)	16	3.16 (0.1244)	48	3.48 (0.1370)
86	2.86 (0.1126)	18	3.18 (0.1252)	–	
88	2.88 (0.1134)	20	3.20 (0.1260)	–	

15. INSTALL BEARING CAP

(a) Align the matchmarks on the cap and carrier.

(b) Install and torque the 4 bolts.

Torque: 113 N·m (1,150 kgf·cm, 83 ft·lbf)

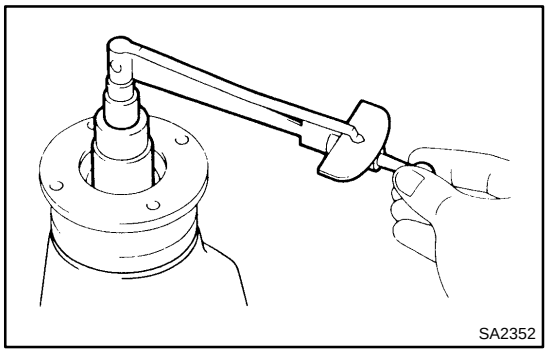

16. MEASURE TOTAL PRELOAD

Using a torque wrench, measure the total preload with the teeth of the drive pinion and ring gear in contact.

Total preload (at starting):

Drive pinion preload plus 0.4 – 0.6 N·m (4 – 6 kgf·cm, 3.5 – 5.2 in.·lbf)

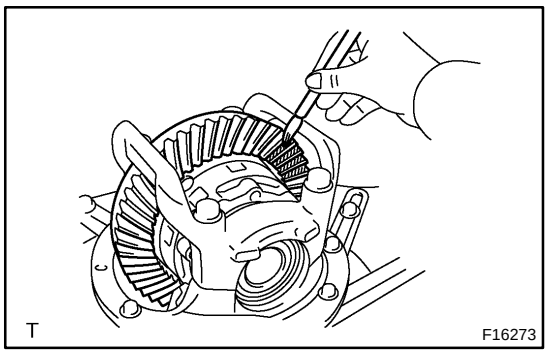

17. INSPECT TOOTH CONTACT BETWEEN RING GEAR AND DRIVE PINION

(a) Coat 3 or 4 teeth at three different positions on the ring gear with red lead primer.

(b) Hold the companion flange firmly and rotate the ring gear in both directions.

(c) Inspect the teeth pattern.

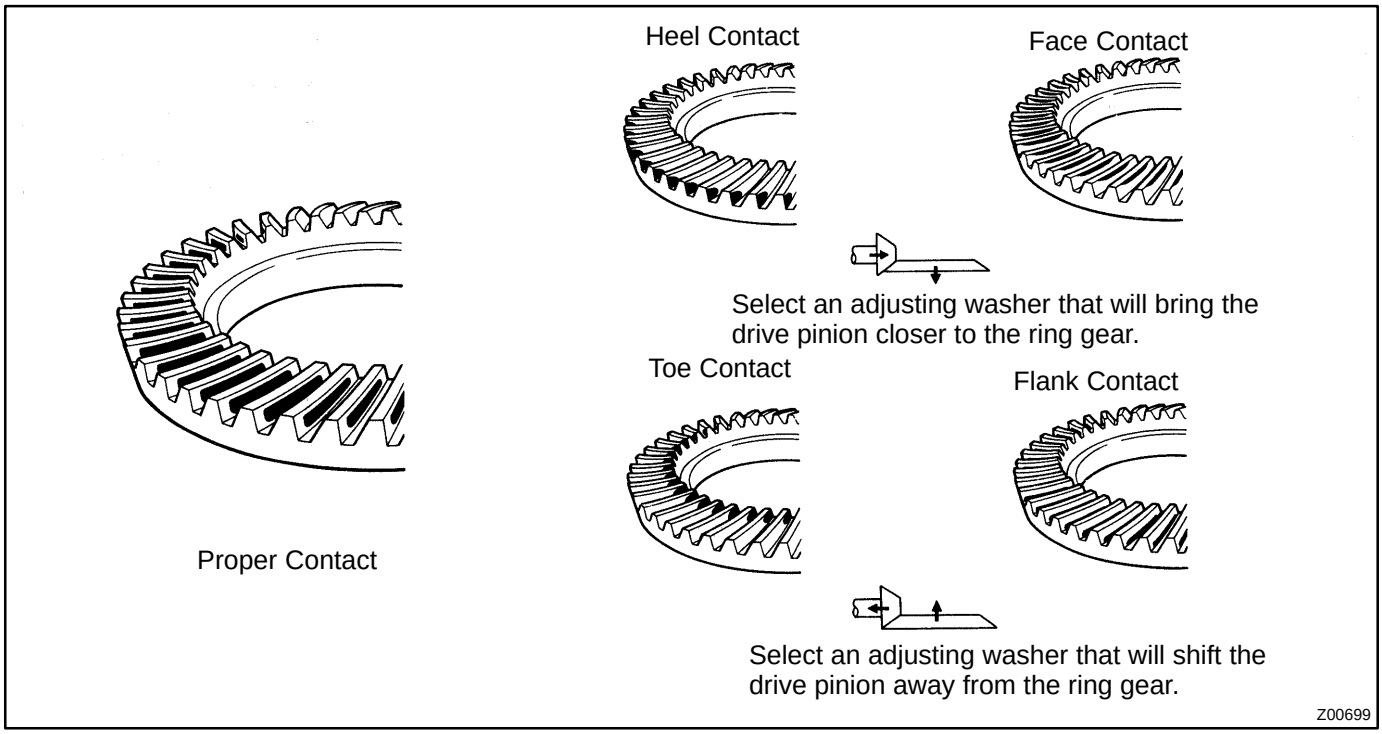

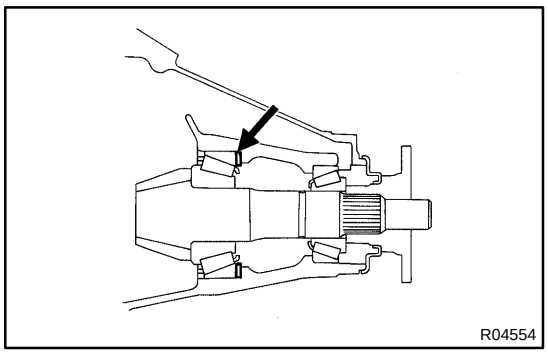

If the teeth are not contacting properly, use the following table to select a proper washer for correction.

Washer thickness:

Mark	Thickness mm (in.)	Mark	Thickness mm (in.)	Mark	Thickness mm (in.)
87	1.87 (0.0736)	01	2.01 (0.0791)	15	2.15 (0.0846)
88	1.88 (0.0740)	02	2.02 (0.0795)	16	2.16 (0.0850)
89	1.89 (0.0744)	03	2.03 (0.0799)	17	2.17 (0.0854)
90	1.90 (0.0748)	04	2.04 (0.0803)	18	2.18 (0.0858)
91	1.91 (0.0752)	05	2.05 (0.0807)	19	2.19 (0.0862)
92	1.92 (0.0756)	06	2.06 (0.0811)	20	2.20 (0.0866)
93	1.93 (0.0760)	07	2.07 (0.0815)	21	2.21 (0.0870)
94	1.94 (0.0764)	08	2.08 (0.0819)	22	2.22 (0.0874)
95	1.95 (0.0768)	09	2.09 (0.0823)	23	2.23 (0.0878)
96	1.96 (0.0772)	10	2.10 (0.0827)	24	2.24 (0.0882)
97	1.97 (0.0776)	11	2.11 (0.0831)	25	2.25 (0.0886)
98	1.98 (0.0780)	12	2.12 (0.0835)	26	2.26 (0.0890)
99	1.99 (0.0783)	13	2.13 (0.0839)	27	2.27 (0.0894)
00	2.00 (0.0787)	14	2.14 (0.0843)	28	2.28 (0.0898)

18. REMOVE COMPANION FLANGE (See page SA–117)

19. REMOVE FRONT BEARING (See page SA–117)

20. INSTALL NEW BEARING SPACER, 2 WASHERS AND FRONT BEARING

(a) Install a new bearing spacer and 2 washers, and place the front bearing.

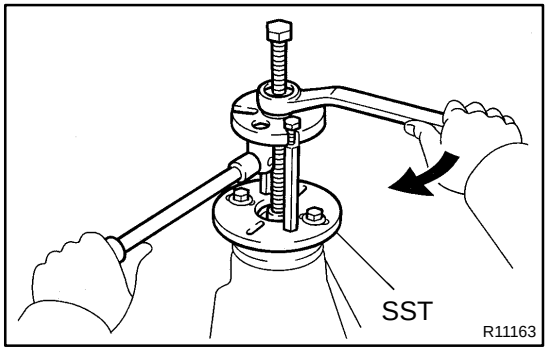

(b) Using SST and the companion flange, install the front bearing then remove the companion flange.

SST 09950–30012 (09951–03010, 09953–03010, 09954–03010, 09955–03030, 09956–03050)

21. INSTALL NEW OIL SEAL

(a) Coat a new oil seal lip with MP grease.

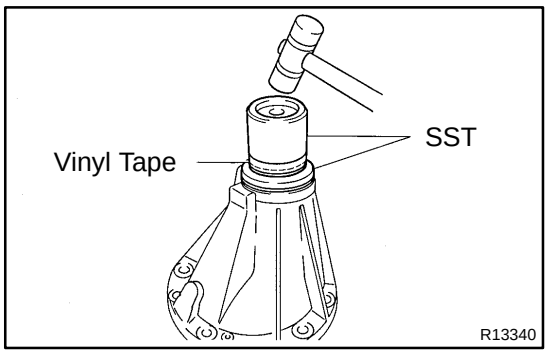

(b) Using SST and a plastic hammer, install the oil seal until its surface is flush with the differential carrier end.
SST 09316–12010, 09649–17010

HINT:
Connect 2 SST with vinyl tape.

22. INSTALL COMPANION FLANGE

(a) Place the companion flange.

(b) Coat the threads of a new nut with hypoid gear oil.

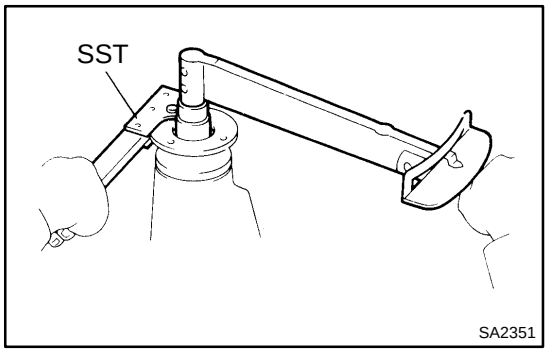

(c) Using SST to hold the flange, torque the nut.
SST 09330–00021
Torque: 147 N·m (1,500 kgf·cm, 109 ft·lbf)

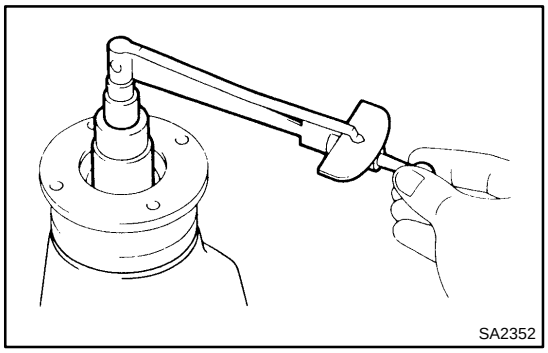

23. ADJUST DRIVE PINION PRELOAD

Using a torque wrench, measure the preload of the drive pinion using the backlash between the drive pinion and ring gear.

Preload (at starting):
New bearing
1.3 – 1.9 N·m (13 – 19 kgf·cm, 11.4 – 16.7 in.·lbf)
Reused bearing
0.6 – 0.9 N·m (6.1 – 9.2 kgf·cm, 5.3 – 8.0 in.·lbf)

If the preload is greater than the specified value, replace the bearing spacer.

If the preload is less than the specified value, retighten the nut with a force of 13 N·m (130 kgf·cm, 9 ft·lbf) at a time until the specified preload is reached.

Torque: 451 N·m (4,600 kgf·cm, 333 ft·lbf) or less

If the maximum torque is exceeded while retightening the nut, replace the bearing spacer and repeat the preload procedure. Do not loosen the pinion nut to reduce the preload.

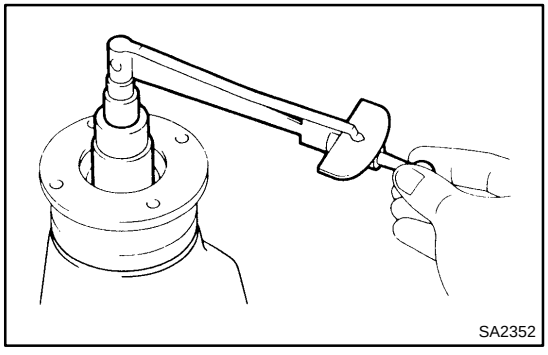

24. CHECK TOTAL PRELOAD

Using a torque wrench, measure the total preload with the teeth of the drive pinion and ring gear in contact.

Total preload (at starting):
Drive pinion preload plus 0.4 – 0.6 N·m (4 – 6 kgf·cm, 3.5 – 5.2 in.·lbf)

25. CHECK RING GEAR BACKLASH

Using a dial indicator, measure the ring gear backlash.

Backlash: 0.13 – 0.18 mm (0.0051 – 0.0071 in.)

26. **RECHECK TOOTH CONTACT BETWEEN RING GEAR AND DRIVE PINION (See step 17.)**
27. **CHECK COMPANION FLANGE RUNOUT (See page SA–117)**
28. **STAKE DRIVE PINION NUT**

SA164–08

INSTALLATION

1. INSTALL DIFFERENTIAL CARRIER ASSEMBLY

(a) Install a new gasket.

(b) Install the differential carrier assembly with 10 washers and nuts.

NOTICE:

Be careful not to damage the installation surface.

Torque: 73 N·m (740 kgf·cm, 54 ft·lbf)

2. CONNECT REAR PROPELLER SHAFT

2WD: See page PR–8

4WD: See page PR–15

3. INSTALL REAR AXLE SHAFTS (See page SA–89)

4. FILL DIFFERENTIAL WITH HYPOID GEAR OIL (See page SA–92)

REAR SHOCK ABSORBER

SA0BX–06

COMPONENTS

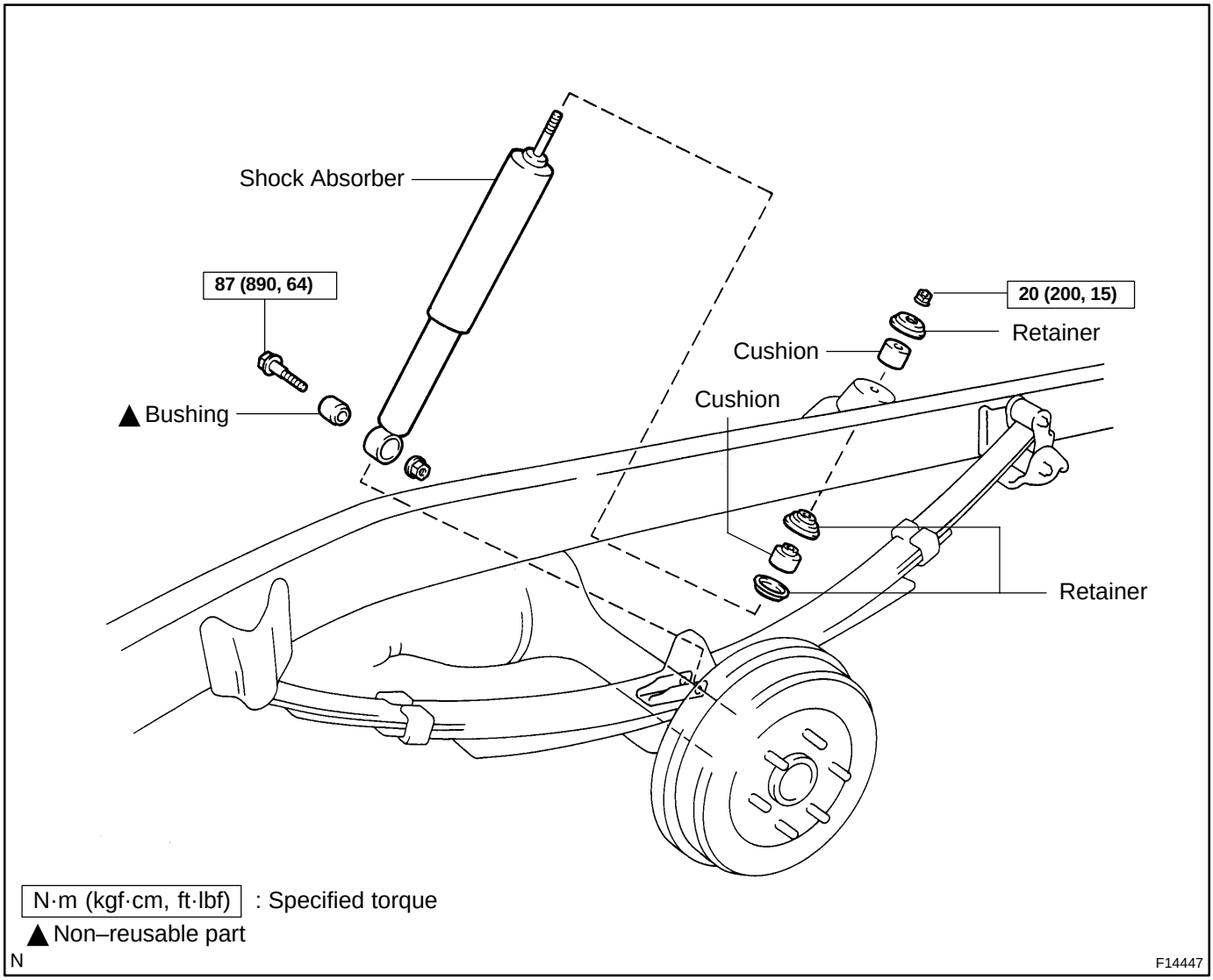

SA1KF–01

REMOVAL

1. SUPPORT BODY WITH SAFETY STANDS

(a) Jack up and support the body on safety stands.

(b) Lower the axle housing until the leaf spring tension is free, and keep it at this position.

2. REMOVE REAR WHEEL

3. REMOVE REAR SHOCK ABSORBER

(a) Remove the bolt and nut on the lower side of the shock absorber.

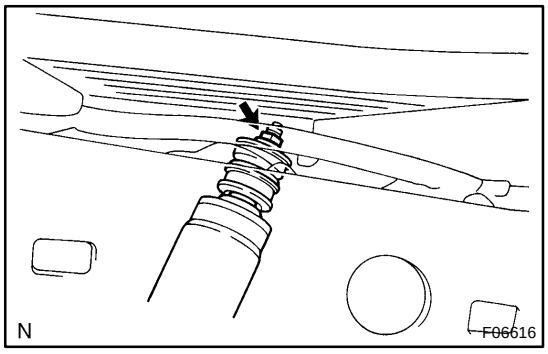

(b) While holding the piston rod, remove the nut, retainer, cushion and shock absorber.

(c) Remove the 2 retainers and cushion from the shock absorber.

SA0BZ–04

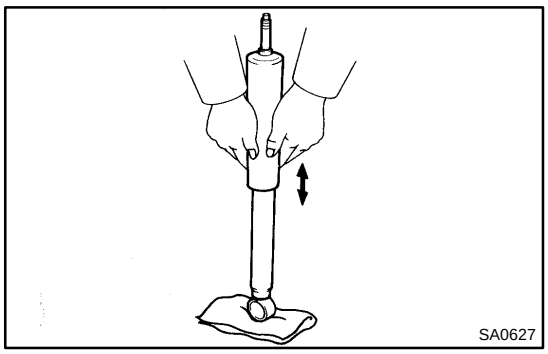

INSPECTION

INSPECT SHOCK ABSORBER

Compress and extend the shock absorber rod and check that there is no abnormal resistance or unusual operation sounds. If there is any abnormality, replace the shock absorber with a new one.

NOTICE:

When disposing of the shock absorber, see DISPOSAL on page SA–142.

SA0C0–04

DISPOSAL

1. FULLY EXTEND SHOCK ABSORBER ROD

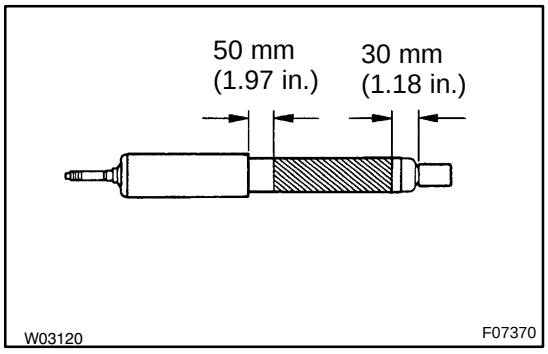

2. DRILL HOLE TO REMOVE GAS FROM CYLINDER

Using a drill, make a hole in the cylinder, as shown in the illustration to discharge the gas inside.

CAUTION:

The discharged gas is harmless, but be careful of chips which may fly up when drilling.

SA1KG–01

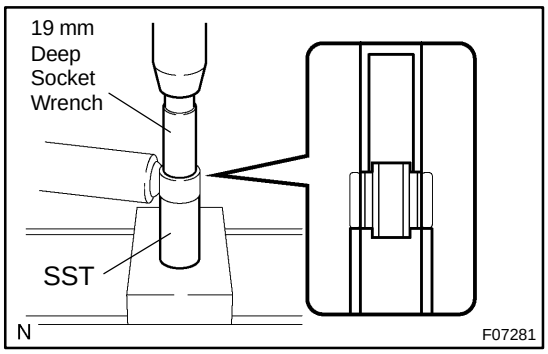

REPLACEMENT

REPLACE BUSHING

(a) Using SST, 19 mm deep socket wrench and a press, remove the bushing.
SST 09632–36010

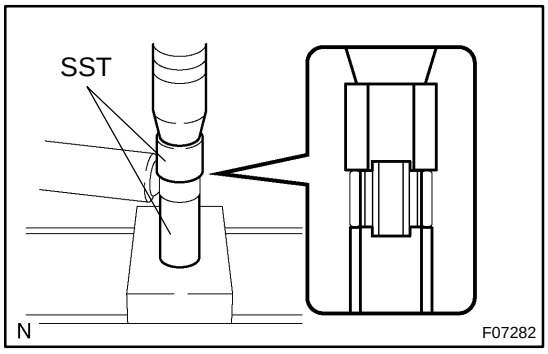

(b) Using SST and a press, install a new bushing.
SST 09630–24014 (09620–24041), 09632–36010

SA0C1–03

INSTALLATION

1. INSTALL REAR SHOCK ABSORBER

(a) Install the 2 retainers and cushion to the shock absorber.

(b) Install the shock absorber, cushion and retainer with nut.
Torque: 20 N·m (200 kgf·cm, 15 ft·lbf)

(c) Install the lower side of the shock absorber with bolt and nut.
Torque: 87 N·m (890 kgf·cm, 64 ft·lbf)

2. INSTALL REAR WHEEL
Torque: 110 N·m (1,150 kgf·cm, 83 ft·lbf)

3. REMOVE SAFETY STANDS

REAR LEAF SPRING

COMPONENTS

SA0C2–05

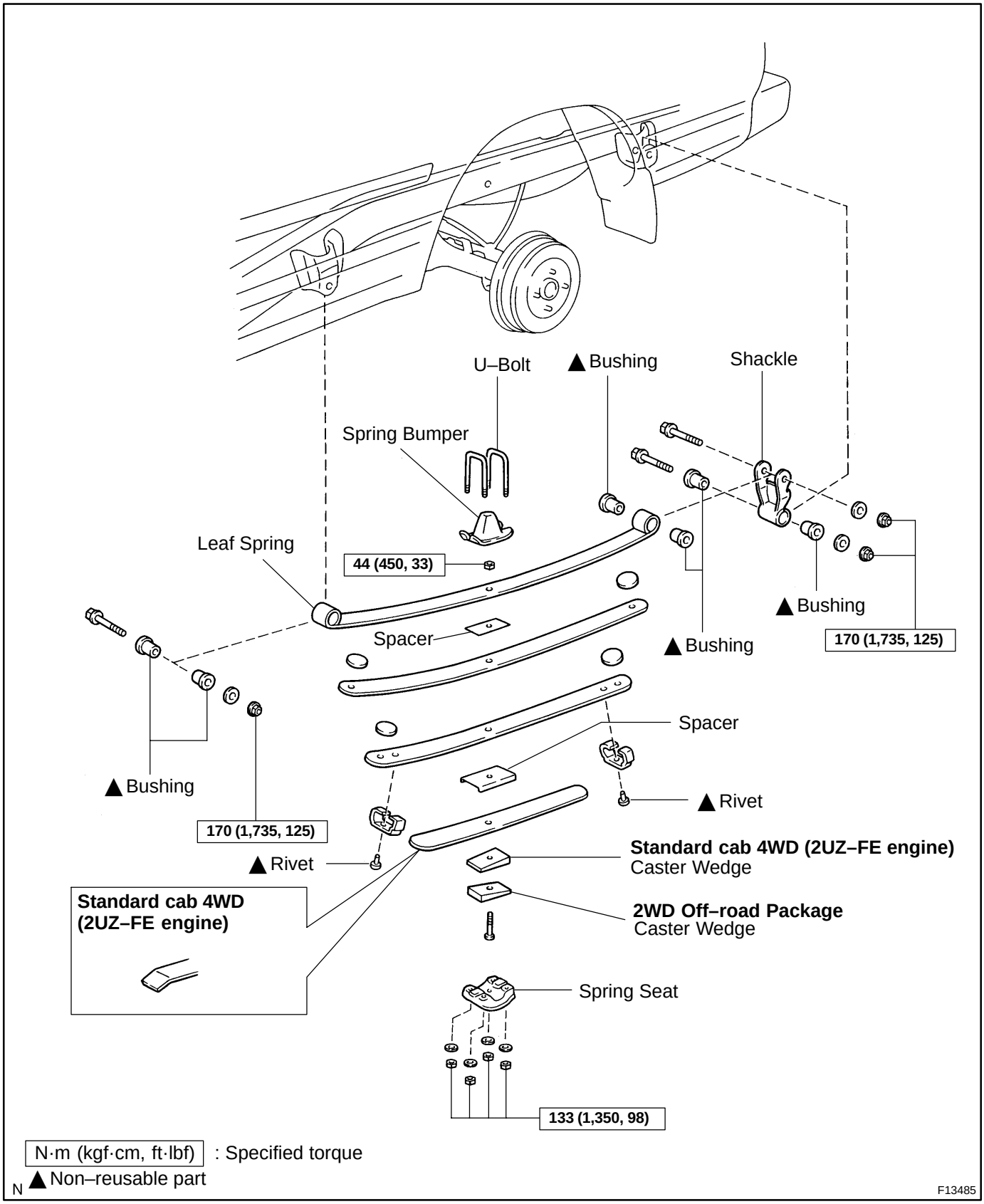

SA0C3–05

REMOVAL

1. SUPPORT BODY WITH SAFETY STANDS

(a) Jack up and support the body on safety stands.

(b) Lower the axle housing until the leaf spring tension is free, and keep it at this position.

2. REMOVE REAR WHEEL

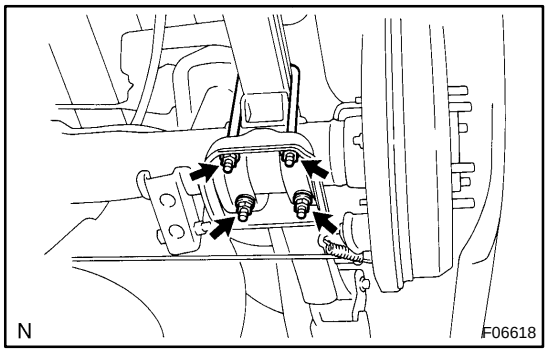

3. REMOVE U–BOLTS

(a) Remove the 4 U–bolt mounting nuts and washers.

(b) Remove the spring seat and 2 U–bolts.

(c) Remove the spring bumper.

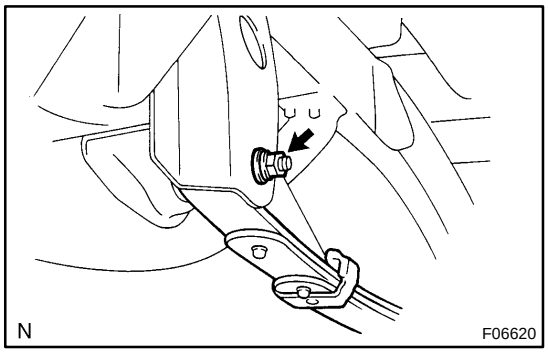

4. REMOVE LEAF SPRING

(a) Remove the nut, washer and bolt.

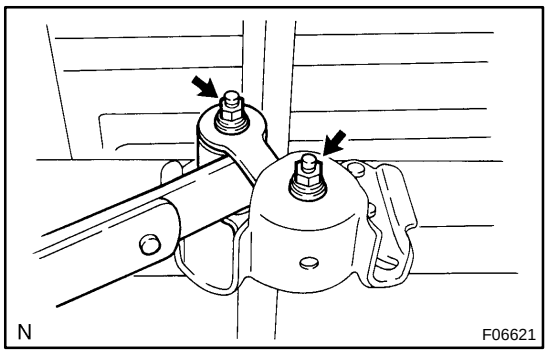

(b) Remove the 2 nuts, washers, bolts, shackle and leaf spring.

SA0C4–03

REPLACEMENT

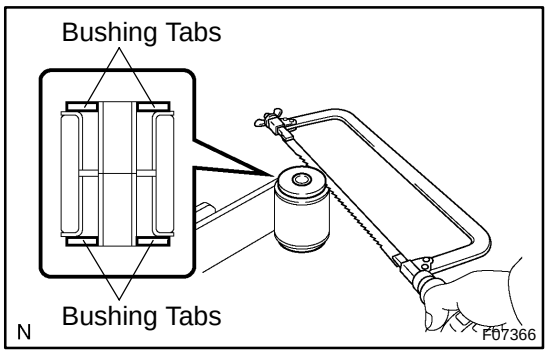

1. REPLACE BUSHINGS

(a) Using a saw, cut the both bushing tabs as shown in the illustration.

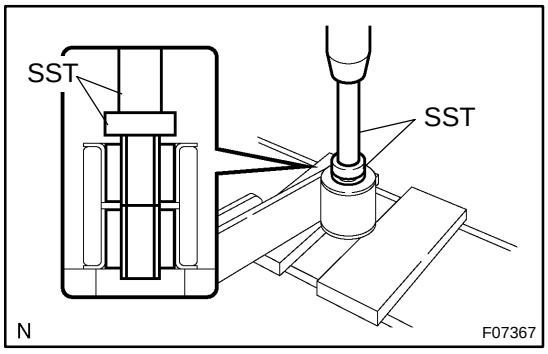

(b) Using SST and a press, press out the both inner tubes and rubber parts of the bushings.
SST 09950–60010 (09951–00350)
09950–70010 (09951–07150)

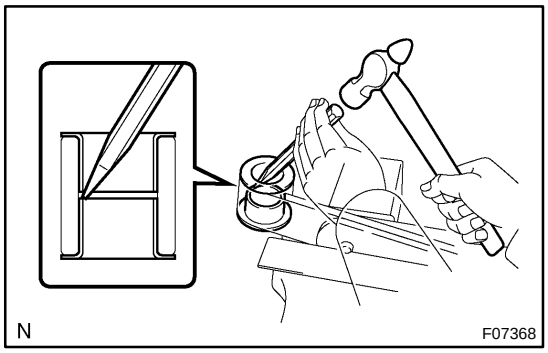

(c) Using a chisel and hammer, tap out the outer tubes.

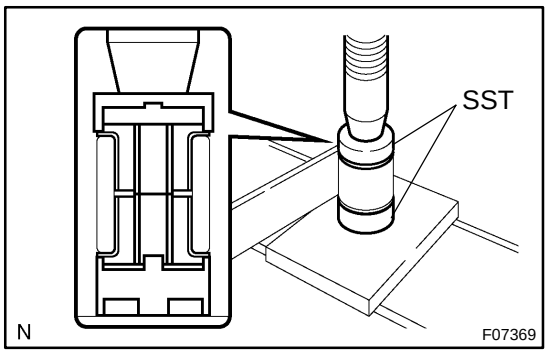

(d) Using SST and a press, install 2 new bushings.
SST 09710–28012 (09710–07062),
09710–30041 (09710–03211)

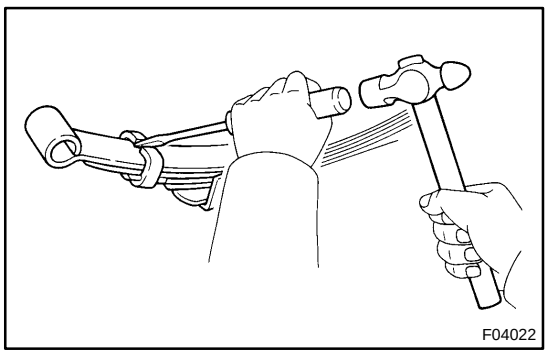

2. REPLACE LEAF SPRING

(a) Bend to open the spring clips.
Using a chisel and hammer, pry up the 2 spring clips.

(b) Remove the center bolt and nut.
Hold the spring near the spring center bolt in a vise and remove the center bolt and nut.

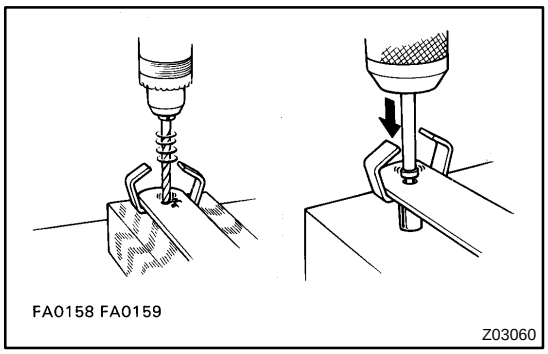

(c) Replace the spring clip.
(1) Drill off the head of the rivet and drive it out.
(2) Install a new rivet into the holes of the spring leaf and clip. Then rivet with a press.

(d) Install spring center bolt and nut.
(1) Align the leaf spring holes and secure the leaves with a vise.
(2) Install the spring center bolt and nut.
Torque: 44 N·m (450 kgf·cm, 33 ft·lbf)

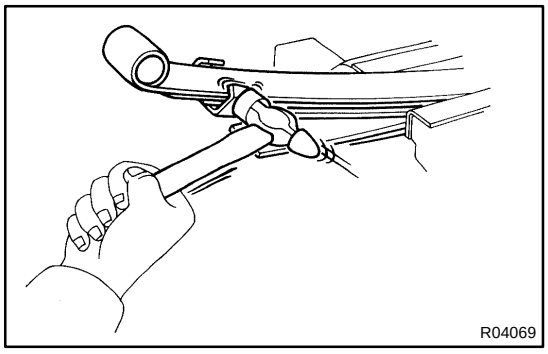

(e) Bend the spring clips.
Using a hammer, bend the spring clips into the position.

SA1KH–01

INSTALLATION

1. INSTALL LEAF SPRING

Install the shackle and leaf spring with 3 bolts, washers and nuts.

Torque: 170 N·m (1,735 kgf·cm, 125 ft·lbf)

HINT:

After stabilizing the suspension, torque the nuts.

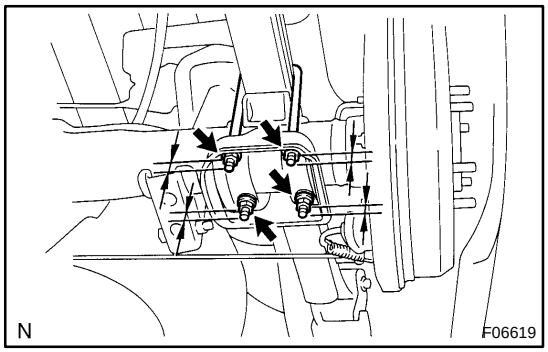

2. INSTALL U–BOLTS

Install the spring bumper, spring seat and 2 U–bolts with the 4 washers and nuts.

Torque: 133 N·m (1,350 kgf·cm, 98 ft·lbf)

HINT:

Tighten the U–bolts so that the lengths of all the U–bolts under the spring seat are the same.

3. INSTALL REAR WHEEL

Torque: 110 N·m (1,150 kgf·cm, 83 ft·lbf)

4. REMOVE SAFETY STANDS

REAR STABILIZER BAR (Sport Suspension Package)

COMPONENTS

SA2BC–01

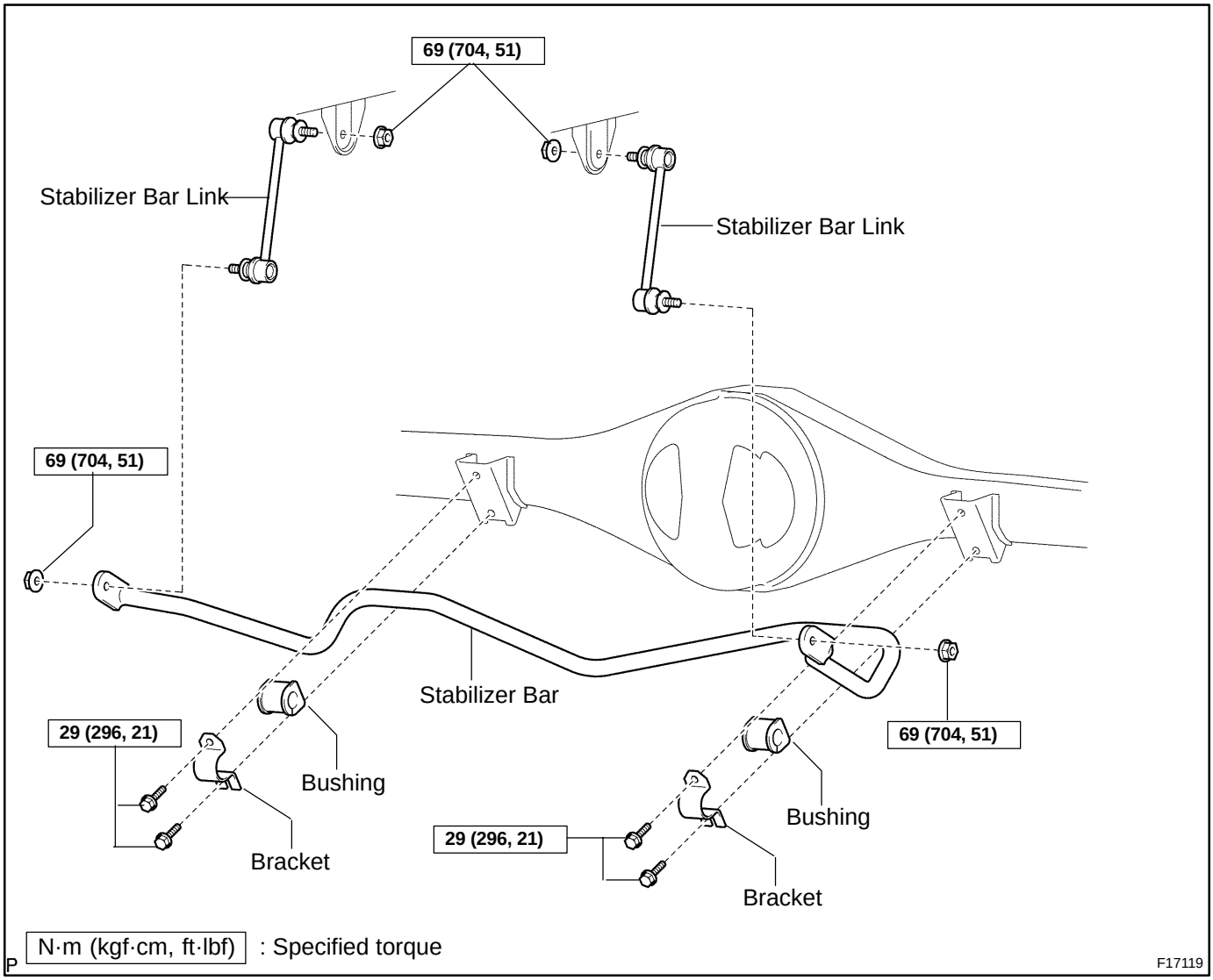

SA2BD–01

REMOVAL

1. REMOVE REAR WHEELS
Torque: 110 N·m (1,150 kgf·cm, 83 ft·lbf)

2. SUPPORT REAR AXLE HOUSING WITH JACK

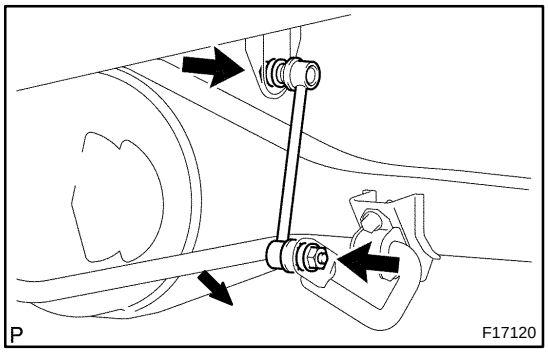

3. REMOVE STABILIZER BAR LINKS

(a) Remove the 2 nuts and stabilizer bar link.
Torque: 69 N·m (704 kgf·cm, 51 ft·lbf)

HINT:

If the ball joint stud turns together with the nut, use a hexagon wrench to hold the stud.

(b) Employ the same manner described above to the other side.

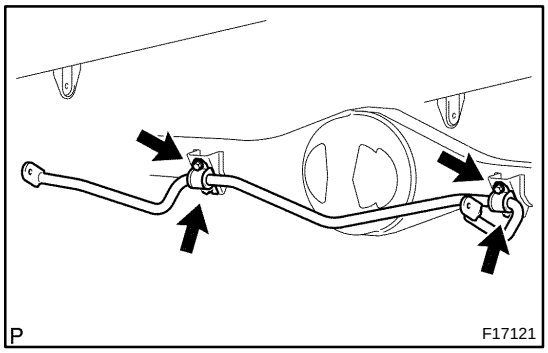

4. REMOVE STABILIZER BAR FROM REAR AXLE HOUSING

(a) Remove the 4 bolts and stabilizer bar with the bushings and brackets.
Torque: 29 N·m (296 kgf·cm, 21 ft·lbf)

(b) Remove the 2 brackets and 2 bushings from the stabilizer bar.

SA2BE–01

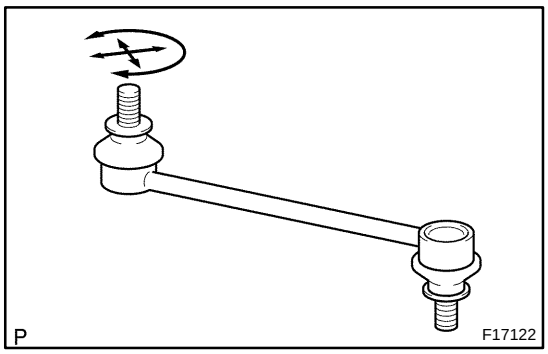

INSPECTION

INSPECT STABILIZER BAR LINK

Rotate the ball joint stud in all directions.

If the movement is not smooth and free, replace the stabilizer link.

SA2BF–01

INSTALLATION

Installation is in the reverse order of removal (See page SA–151).

TRANSFER SYSTEM

TR00V–02

PRECAUTION

When working with FIPG material, you must observe the following.

- **Using a razor blade and gasket scraper, remove all the old packing (FIPG) material from the gasket surfaces.**
- **Thoroughly clean all components to remove all the loose material.**
- **Clean both sealing surfaces with a non–residue solvent.**
- **Apply FIPG in approx. 1 mm (0.04 in.) wide bead along the sealing surface.**
- **Parts must be assembled within 10 minutes of application. Otherwise, the packing (FIPG) material must be removed and reapplied.**

TROUBLESHOOTING

PROBLEM SYMPTOMS TABLE

TR00T–05

Use the table below to help you find the cause of the problem. The numbers indicate the priority of the likely cause of the problem. Check each part in order. If necessary, replace these parts.

Symptom	Suspect Area	See page
Noise	5. Oil (Level low) 6. Oil (Wrong) 7. Transfer faulty	TR–6 TR–6 TR–8
Oil leakage	1. Oil (Level too high) 2. Gasket (Damaged) 3. Oil seal (Worn or damaged) 4. O–ring (Worn or damaged)	TR–6 TR–8 TR–39 –
Hard to shift or will not shift	1. Shifting key spring (Damaged) 2. Synchronizer ring (Worn or damaged)	TR–26 TR–26

TRANSFER UNIT

TR098–01

COMPONENTS

HINT:

VF2A transfer is used for the vehicles with 5VZ–FE engine installed.

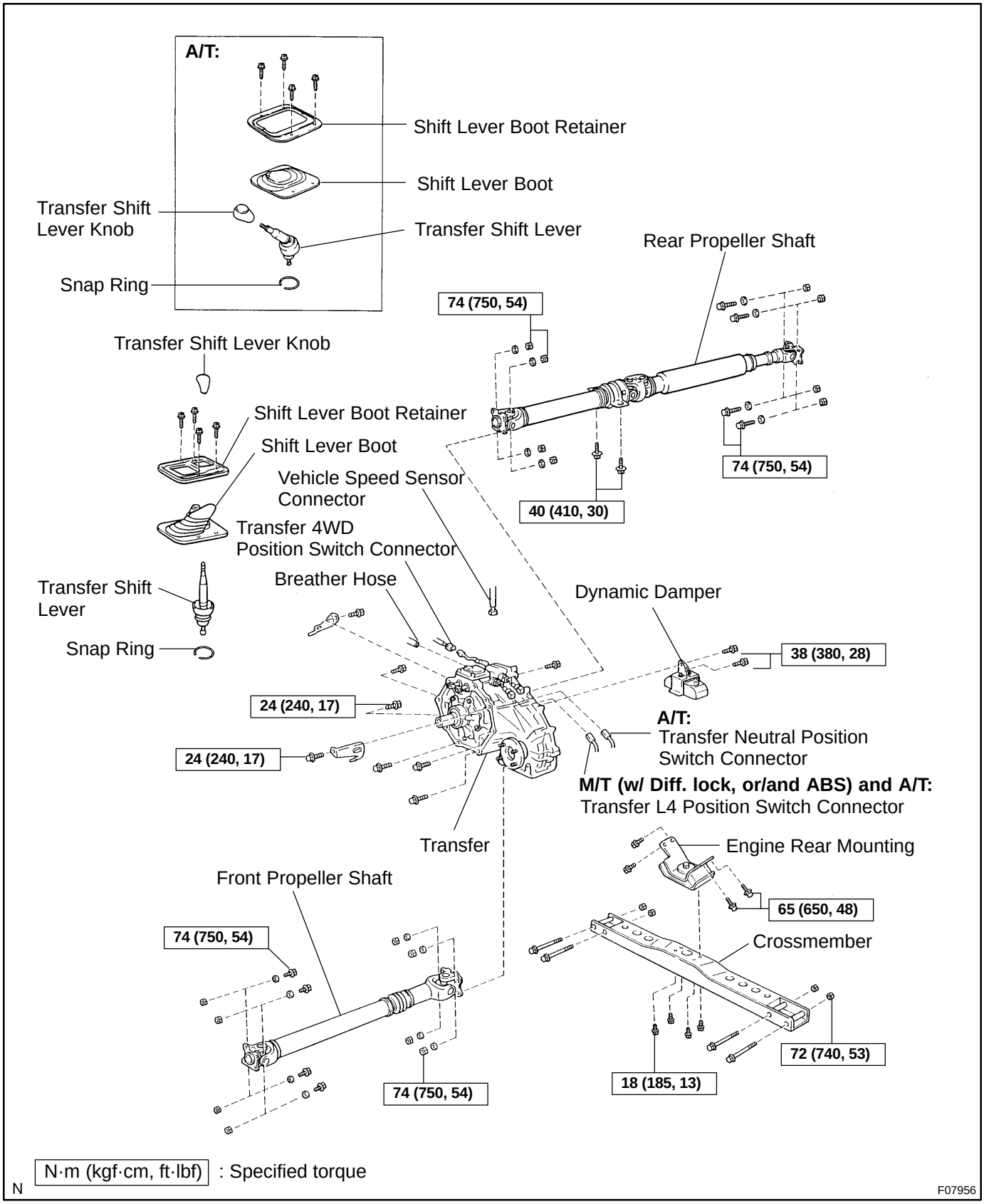

TR099–01

REMOVAL

1. REMOVE TRANSFER SHIFT LEVER

(a) Remove the transfer shift lever knob.

(b) Remove the 4 screws, shift lever boot retainer and shift lever boot.

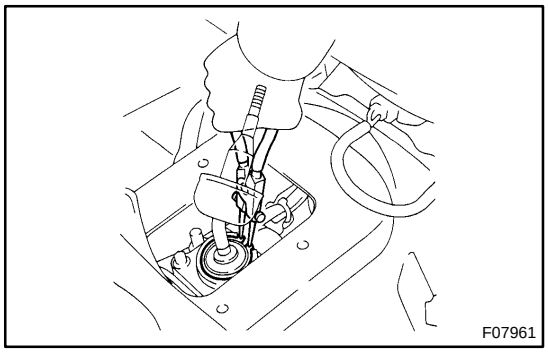

(c) Using snap ring pliers, remove the snap ring and pull out the transfer shift lever.

HINT:

Shift the transfer shift lever to the ”H4” position.

2. DISCONNECT BREATHER HOSE

Disconnect the breather hose from the transfer.

3. RAISE VEHICLE AND DRAIN TRANSFER OIL

4. REMOVE FRONT AND REAR PROPELLER SHAFTS (See page PR–10)

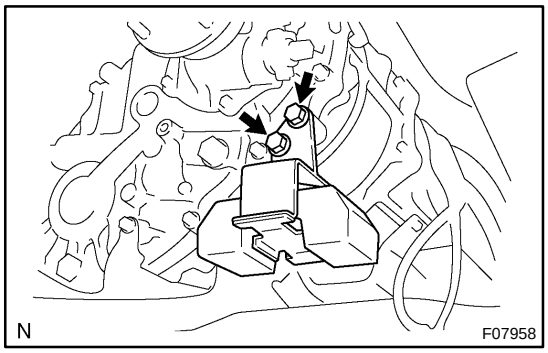

5. REMOVE DYNAMIC DAMPER

Remove the 2 bolts and dynamic damper from the transfer.

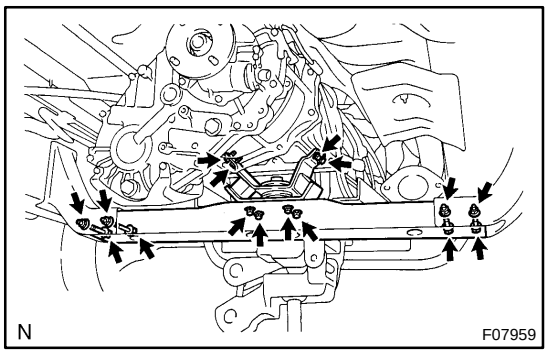

6. REMOVE CROSSMEMBER

(a) Support the transmission rear side with a transmission jack.

(b) Remove the 4 bolts.

(c) Remove the 4 bolts, nuts and crossmember.

7. REMOVE ENGINE REAR MOUNTING

Remove the 4 bolts and engine rear mounting from the transfer adaptor.

8. DISCONNECT VEHICLE SPEED SENSOR AND TRANSFER DETECTION SWITCH CONNECTORS (See page TR–3)

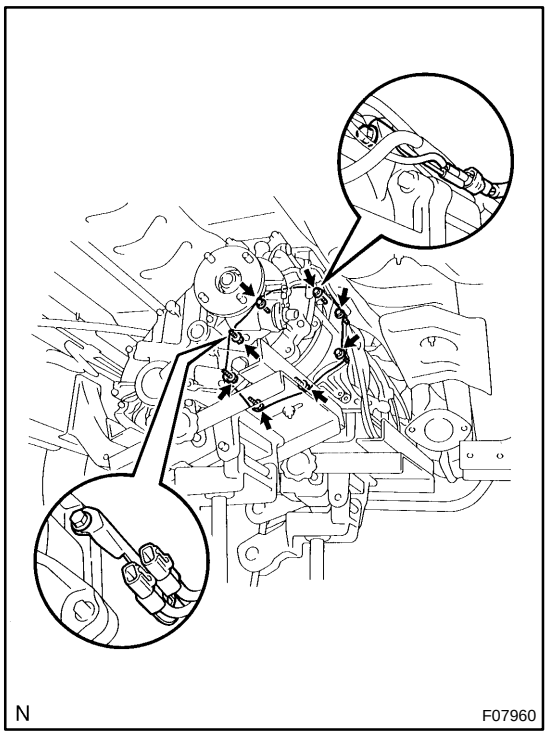

9. REMOVE TRANSFER

(a) Support the transfer with another transmission jack.
(b) Remove the 8 transfer mounting bolts.
(c) Pull out the transfer from the transfer adaptor down and toward the rear.

TR09A–01

INSTALLATION

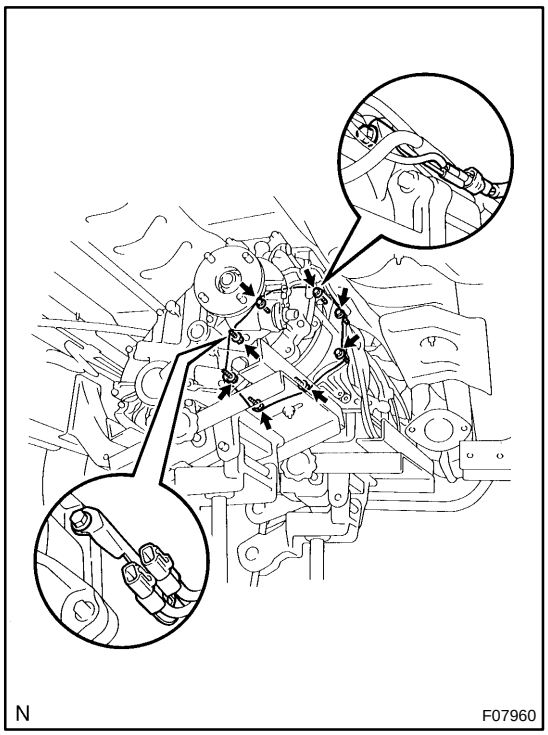

1. RAISE VEHICLE

2. INSTALL TRANSFER

Raise the transfer and install it to the transfer adaptor with the 8 transfer mounting bolts.

Torque: 24 N·m (240 kgf·cm, 17 ft·lbf)

NOTICE:

Take care not to damage the lip of the transfer adaptor rear oil seal with the transfer input shaft.

3. CONNECT VEHICLE SPEED SENSOR AND TRANSFER DETECTION SWITCH CONNECTORS

(See page TR–3)

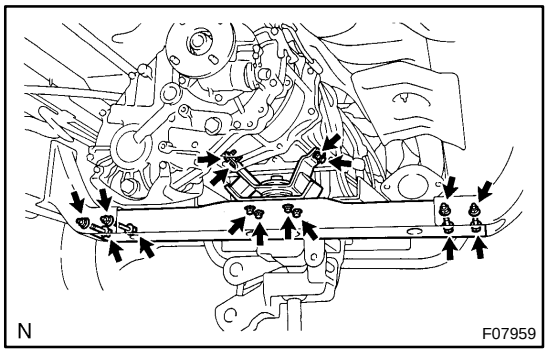

4. INSTALL ENGINE REAR MOUNTING

Install the engine rear mounting to the transfer adaptor with the 4 bolts.

Torque: 65 N·m (650 kgf·cm, 48 ft·lbf)

5. INSTALL CROSSMEMBER

(a) Install the crossmember with the 4 bolts and nuts.

Torque: 72 N·m (740 kgf·cm, 53 ft·lbf)

(b) Install the 4 bolts.

Torque: 18 N·m (185 kgf·cm, 13 ft·lbf)

(c) Remove the transmission jacks.

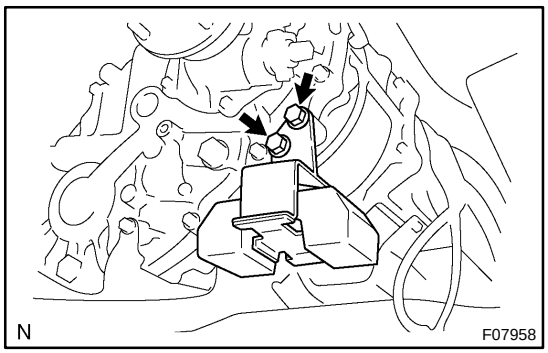

6. INSTALL DYNAMIC DAMPER

Install the dynamic damper to the transfer with the 2 bolts.

Torque: 38 N·m (380 kgf·cm, 28 ft·lbf)

7. INSTALL FRONT AND REAR PROPELLER SHAFTS

(See page PR–15)

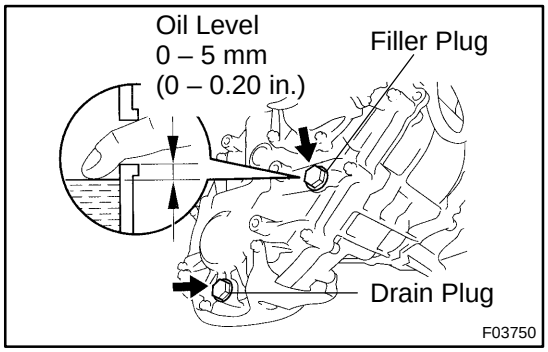

8. FILL TRANSFER OIL

Oil grade: API GL–4 or GL–5
Viscosity: SAE 75W–90
Capacity: 1.0 liters (1.1 US qts, 0.9 Imp. qts)
Torque: 37 N·m (380 kgf·cm, 27 ft·lbf)

9. CONNECT BREATHER HOSE

Connect the breather hose to the transfer.

Hose installation depth: 13 mm (0.51 in.) or more

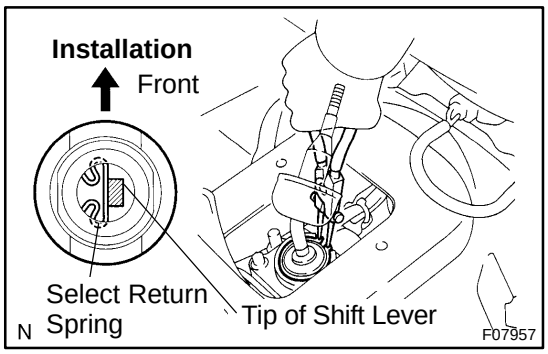

10. INSTALL TRANSFER SHIFT LEVER

(a) Lower the vehicle.

(b) Install the tip of the transfer shift lever as shown in the illustration.

HINT:

Apply MP grease to the tip of the transfer shift lever.

(c) Pressing down on the transfer shift lever cap, and using snap ring pliers, install the snap ring.

(d) Install the shift lever boot and shift lever boot retainer with the 4 screws.

(e) Install the transfer shift lever knob.

11. DO ROAD TEST

Check for abnormal noises and smooth shifting.

TRANSFER ASSEMBLY

COMPONENTS

TR07O–02

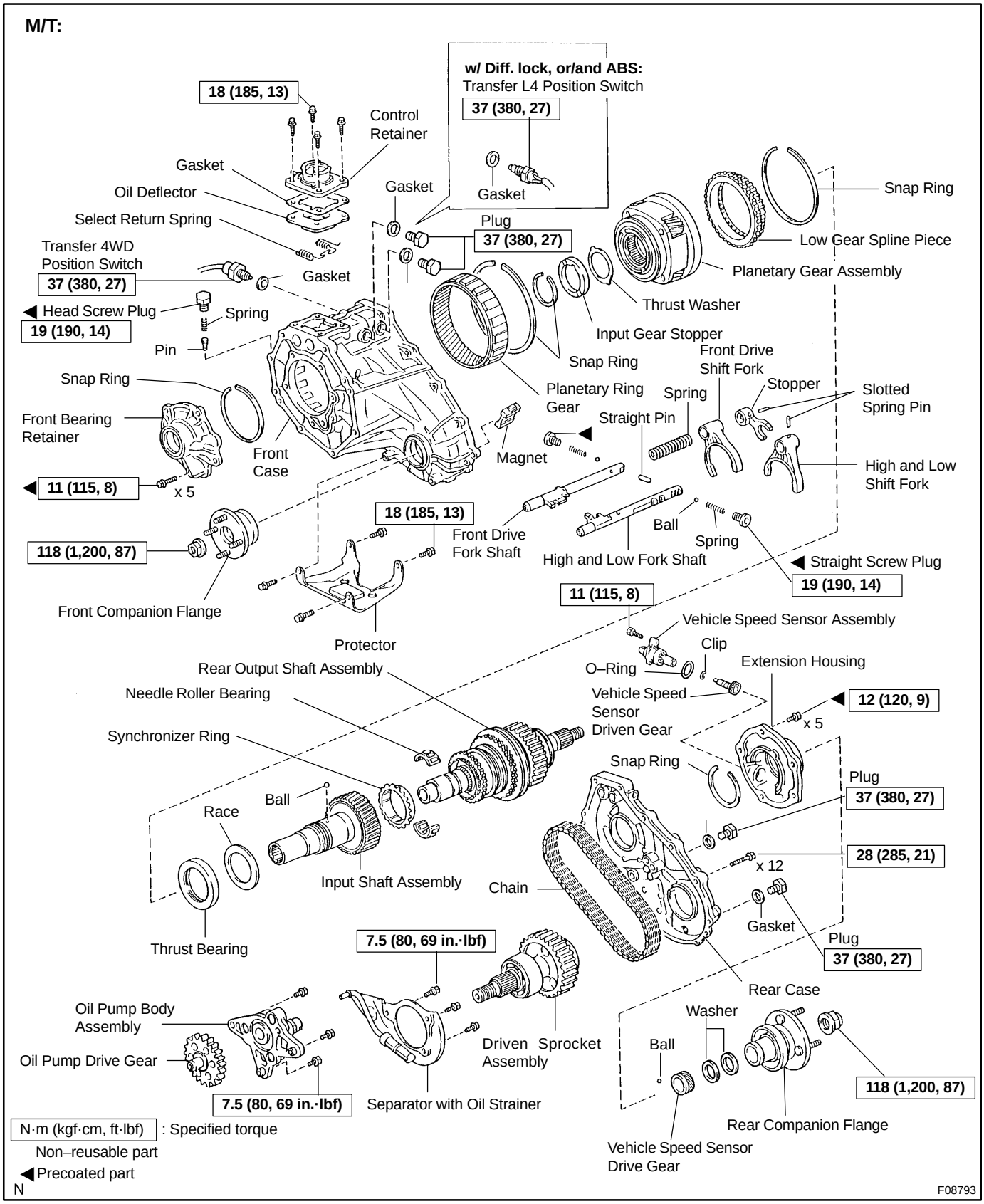

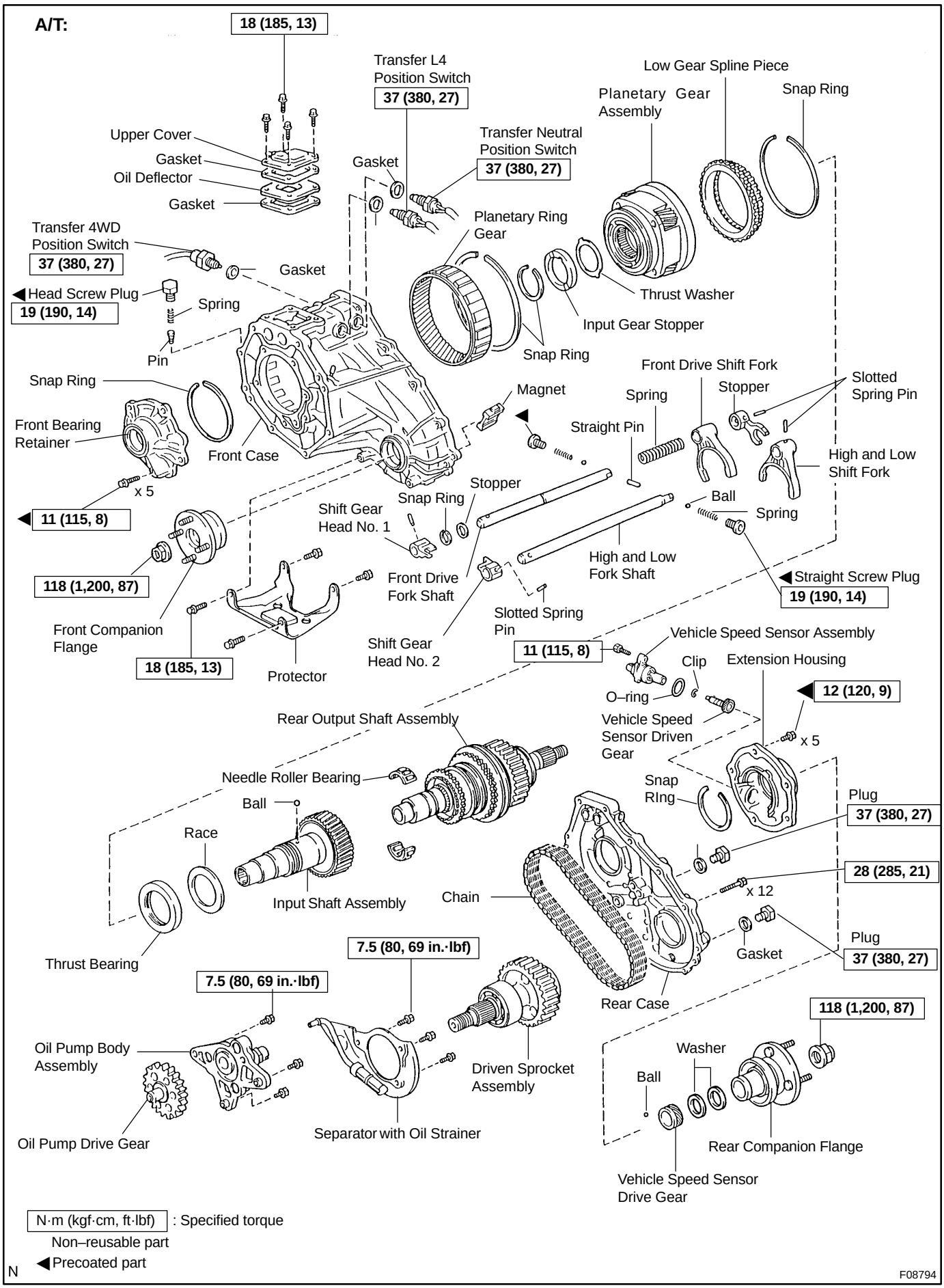
A/T:
18 (185, 13)
Transfer L4 Position Switch
37 (380, 27)
Low Gear Spline Piece
Planetary Gear Assembly
Snap Ring
Upper Cover
Gasket
Oil Deflector
Gasket
Gasket
Transfer Neutral Position Switch
37 (380, 27)
Transfer 4WD Position Switch
37 (380, 27)
Gasket
Planetary Ring Gear
Thrust Washer
Head Screw Plug
19 (190, 14)
Spring
Pin
Input Gear Stopper
Snap Ring
Front Drive Shift Fork
Stopper
Slotted Spring Pin
Snap Ring
Front Bearing Retainer
Front Case
Magnet
Spring
Straight Pin
High and Low Shift Fork
x 5
11 (115, 8)
Stopper
Snap Ring
Shift Gear Head No. 1
Ball
Spring
118 (1,200, 87)
Front Drive Fork Shaft
High and Low Fork Shaft
Straight Screw Plug
19 (190, 14)
Front Companion Flange
18 (185, 13)
Protector
Shift Gear Head No. 2
Slotted Spring Pin
11 (115, 8)
Vehicle Speed Sensor Assembly
Clip
Extension Housing
O–ring
12 (120, 9)
Vehicle Speed Sensor Driven Gear
x 5
Rear Output Shaft Assembly
Needle Roller Bearing
Snap RIng
Plug
37 (380, 27)
Ball
Race
28 (285, 21)
x 12
Chain
Input Shaft Assembly
Thrust Bearing
Gasket
Plug
37 (380, 27)
7.5 (80, 69 in.·lbf)
7.5 (80, 69 in.·lbf)
Rear Case
118 (1,200, 87)
Oil Pump Body Assembly
Driven Sprocket Assembly
Washer
Ball
Oil Pump Drive Gear
Separator with Oil Strainer
Rear Companion Flange
Vehicle Speed Sensor Drive Gear
N·m (kgf·cm, ft·lbf) : Specified torque
Non–reusable part
◀ Precoated part
N
F08794

TR07P–02

DISASSEMBLY

1. REMOVE VEHICLE SPEED SENSOR ASSEMBLY

(a) Remove the bolt and vehicle speed sensor assembly.
Torque: 11 N·m (115 kgf·cm, 8 ft·lbf)

(b) Remove the O–ring from the vehicle speed sensor assembly.

HINT:
At the time of reassembly, install a new O–ring.

(c) Remove the clip and vehicle speed sensor driven gear.

2. M/T (w/ Diff. lock, or/and ABS) and A/T:
REMOVE TRANSFER L4 POSITION SWITCH WITH GASKET
Torque: 37 N·m (380 kgf·cm, 27 ft·lbf)

HINT:
At the time of reassembly, install a new gasket.

3. REMOVE TRANSFER 4WD POSITION SWITCH WITH GASKET
Torque: 37 N·m (380 kgf·cm, 27 ft·lbf)

HINT:
At the time of reassembly, install a new gasket.

4. A/T:
REMOVE TRANSFER NEUTRAL POSITION SWITCH WITH GASKET
Torque: 37 N·m (380 kgf·cm, 27 ft·lbf)

HINT:
At the time of reassembly, install a new gasket.

5. M/T:
REMOVE 2 PLUGS AND GASKETS OF FRONT CASE
Torque: 37 N·m (380 kgf·cm, 27 ft·lbf)

HINT:
At the time of reassembly, please refer to the following items.

▲ Install a new gasket.
▲ The input and output shafts rotate smoothly.
▲ Shifting can be made smoothly to all positions.

6. REMOVE PROTECTOR

Remove the 4 bolts and protector.
Torque: 18 N·m (185 kgf·cm, 13 ft·lbf)

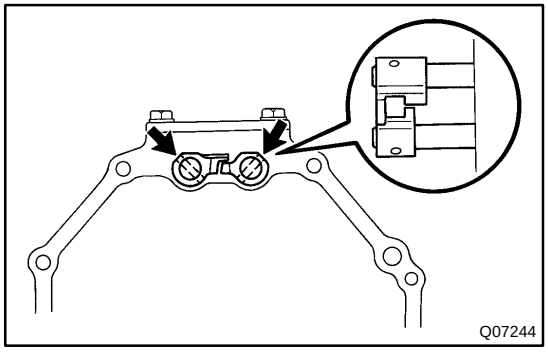

7. A/T:
REMOVE SHIFT GEAR HEAD NO. 1 AND NO. 2

(a) Using a pin punch and hammer, drive out the 2 slotted spring pins.

(b) Remove the 2 shift gear heads.

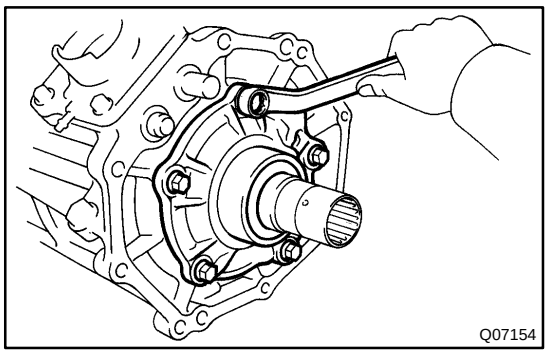

8. REMOVE FRONT BEARING RETAINER

(a) Remove the 5 bolts.

Torque: 11 N·m (115 kgf·cm, 8 ft·lbf)

HINT:

At the time of reassembly, apply liquid sealer to the bolt threads.

Sealant:
Part No. 08833–00080, THREE BOND 1344, LOCTITE 242 or equivalent

(b) Using a plastic hammer, tap the front bearing retainer and remove it.

HINT:

At the time of reassembly, please refer to the following items.

▲ Remove any FIPG material and be careful not to drop oil on the contacting surfaces of the front bearing retainer.

▲ Apply FIPG to the front bearing retainer, as shown.

FIPG:
Part No. 08826–00090, THREE BOND 1281 or equivalent

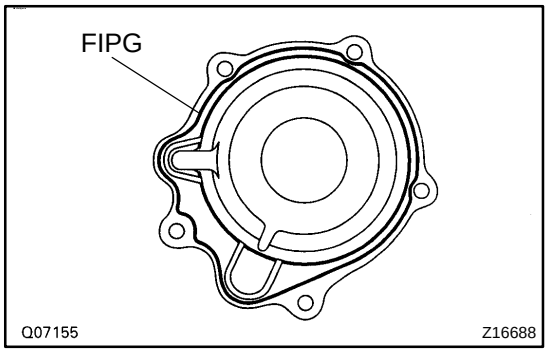

9. M/T:

REMOVE CONTROL RETAINER AND OIL DEFLECTOR

(a) Remove the 4 bolts, control retainer, gasket and oil deflector.

Torque: 18 N·m (185 kgf·cm, 13 ft·lbf)

HINT:

At the time of reassembly, install a new gasket.

(b) Remove the select return spring from the control retainer.

10. A/T:

REMOVE UPPER COVER AND OIL DEFLECTOR

Remove the 4 bolts, upper cover, 2 gaskets and oil deflector.

Torque: 18 N·m (185 kgf·cm, 13 ft·lbf)

HINT:

At the time of reassembly, install 2 new gaskets.

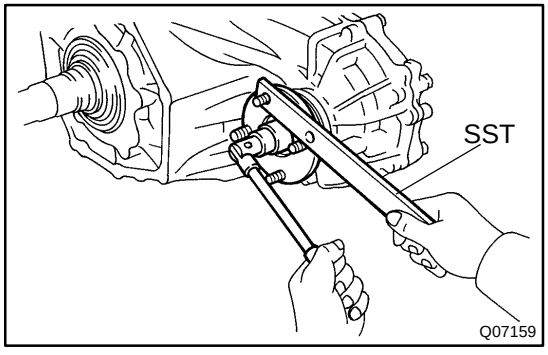

11. REMOVE FRONT COMPANION FLANGE

(a) Using a chisel and hammer, loosen the staked part of the nut.

HINT:

At the time of reassembly, stake a new lock nut.

(b) Using SST to hold the flange, remove the companion flange lock nut.

SST 09330–00021

Torque: 118 N·m (1,200 kgf·cm, 87 ft·lbf)

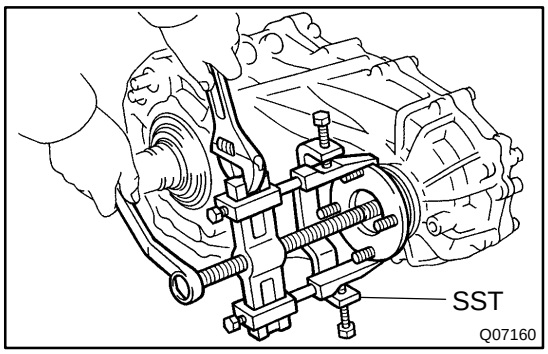

(c) Using SST, remove the companion flange.
SST 09950–40011 (09951–04020, 09952–04010, 09953–04030, 09954–04010, 09955–04051, 09957–04010, 09958–04011)

12. REMOVE REAR COMPANION FLANGE

Remove the rear companion flange in the same way as the front companion flange.

HINT:

At the time of reassembly, please refer to the following items.

▲ Front companion flange bolts are thin.

▲ Rear companion flange bolts are thick.

13. REMOVE EXTENSION HOUSING

(a) Remove the 5 bolts.
Torque: 12 N·m (120 kgf·cm, 9 ft·lbf)

HINT:

At the time of reassembly, apply liquid sealer to the bolt threads.
Sealant:
Part No. 08833–00080, THREE BOND 1344, LOCTITE 242 or equivalent

(b) Using a plastic hammer, tap the extension housing and remove it.

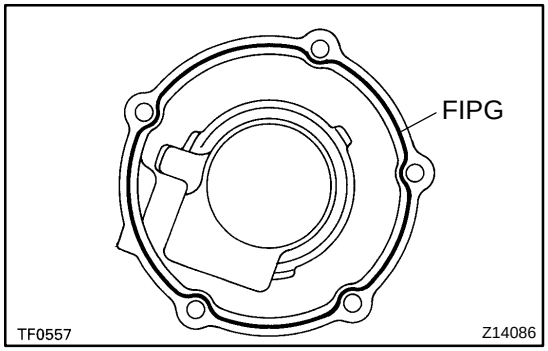

HINT:

At the time of reassembly, please refer to the following items.

▲ Remove any FIPG material and be careful not to drop oil on the contacting surfaces of the extension housing.

▲ Apply FIPG to the extension housing, as shown.
FIPG:
Part No. 08826–00090, THREE BOND 1281 or equivalent

14. REMOVE VEHICLE SPEED SENSOR DRIVE GEAR

(a) Remove the 2 output shaft washers and vehicle speed sensor drive gear.

(b) Using a magnetic finger, remove the ball from the rear output shaft.

15. SEPARATE FRONT CASE AND REAR CASE

(a) Remove the 12 bolts.
Torque: 28 N·m (285 kgf·cm, 21 ft·lbf)

(b) Using a screwdriver, separate the front case and rear case.

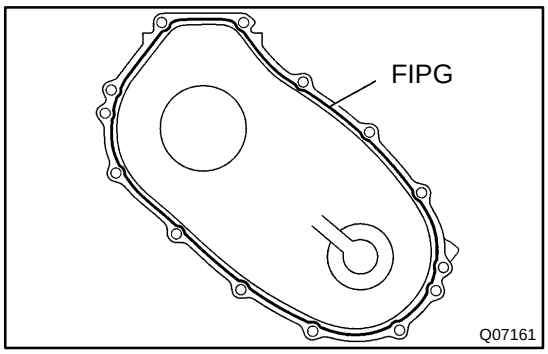

HINT:

At the time of reassembly, please refer to the following items.

- ▲ Shift the high and low sleeve to low side (rear side) and assemble the front case and rear case.
- ▲ Remove any FIPG material and be careful not to drop oil on the contacting surfaces of the rear case.
- ▲ Apply FIPG to the rear case, as shown.

FIPG:

Part No. 08826–00090,

THREE BOND 1281 or equivalent

16. REMOVE STRAIGHT SCREW PLUG, SPRING AND LOCKING BALL

(a) Using a hexagon wrench, remove the 2 plugs.

Torque: 19 N·m (190 kgf·cm, 14 ft·lbf)

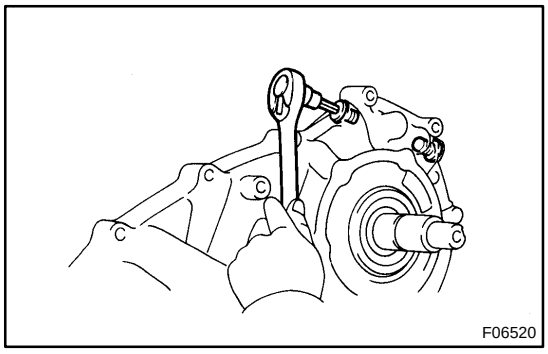

HINT:

At the time of reassembly, apply liquid sealer to the plug threads.

Sealant:

Part No. 08833–00080, THREE BOND 1344,

LOCTITE 242 or equivalent

(b) Using a magnetic finger, remove the 2 springs and balls from the both holes.

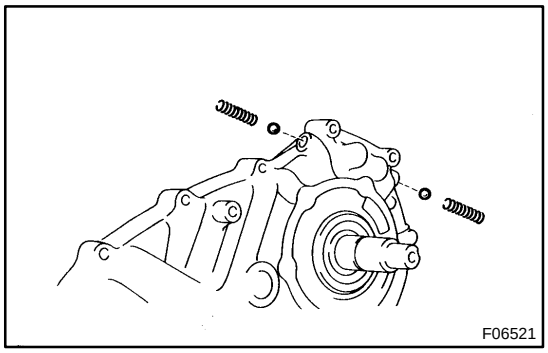

17. REMOVE FRONT DRIVE FORK SHAFT, SHIFT FORK, SPRING AND STOPPER

(a) Mount the rear case in a vise.

NOTICE:

Be careful not to damage the sealing surface.

(b) Using a pin punch and hammer, drive out the 2 slotted spring pins.

HINT:

When the pin is removed from the front drive fork shaft, the shaft will spring loose if the pin punch is removed, so keep the pin punch inserted in the shaft hole.

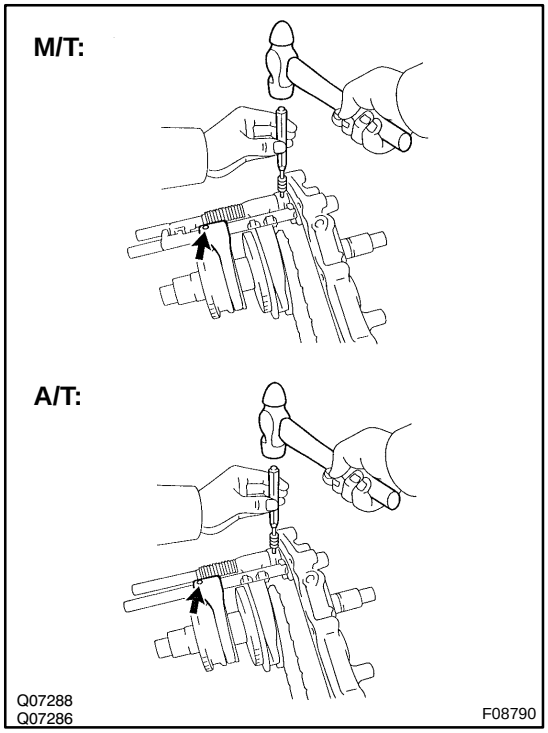

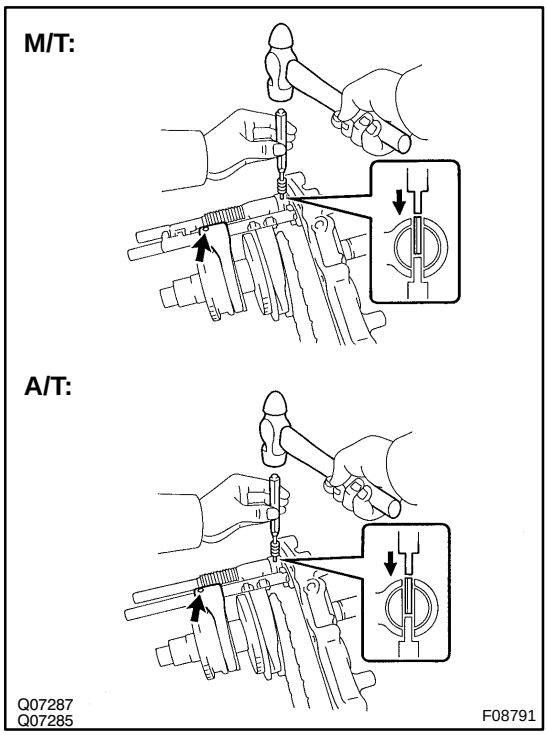

HINT:

At the time of reassembly, please refer to the following items.

- ▲ Using a pin punch and hammer, drive in the 2 slotted spring pins.
- ▲ When installing the pin in the front drive fork shaft, push the shaft towards the rear case and install the pin while the spring is compressed.

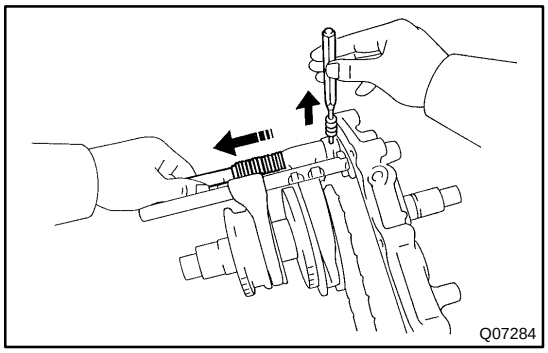

(c) Hold the front drive fork shaft in place by hand, when removing the pin punch.

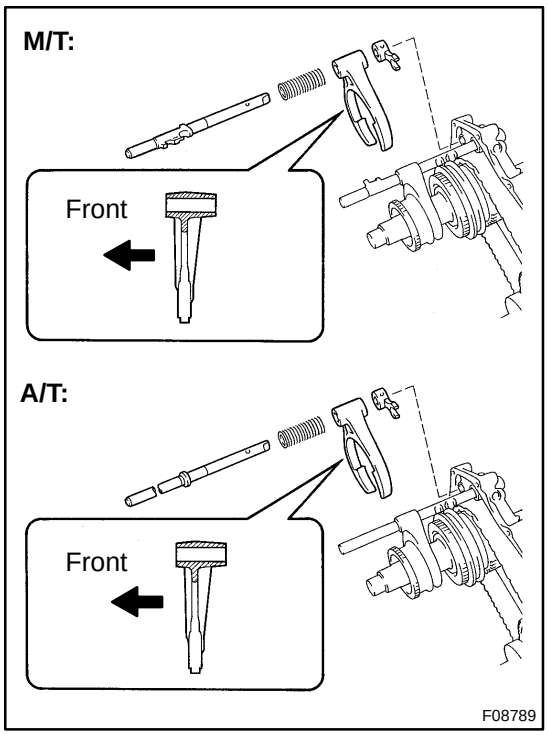

(d) Remove the front drive fork shaft, shift fork, spring and stopper.

HINT:

At the time of reassembly, please refer to the following items.

- ▲ Place the front drive shift fork into the groove of the clutch sleeve.
- ▲ Make sure that the shift fork and stopper are installed in the correct direction.

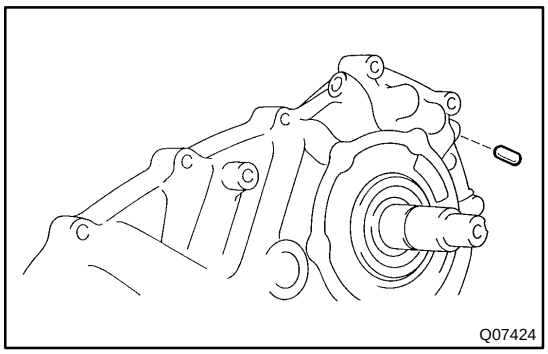
Q07424

(e) Using a magnetic finger, remove the straight pin.

HINT:

At the time of reassembly, apply gear oil to the straight pin and insert it into the case hole.

M/T:

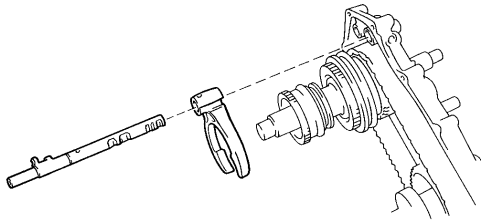

A/T:

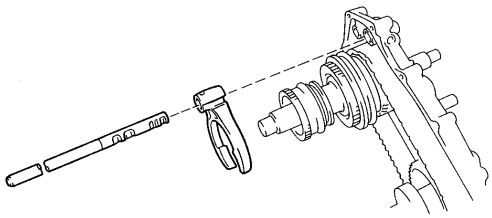
Q07425
Q07426
F08792

18. REMOVE HIGH AND LOW FORK SHAFT AND SHIFT FORK

HINT:

At the time of reassembly, please refer to the following items.

- ▲ Place the high and low shift fork into the groove of the clutch sleeve.
- ▲ Make sure that the shift fork is installed in the correct direction.

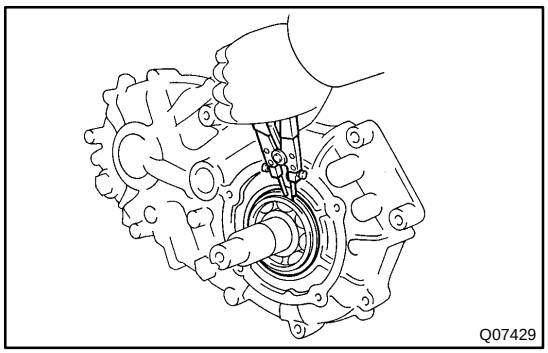
Q07429

19. REMOVE REAR OUTPUT SHAFT ASSEMBLY, DRIVEN SPROCKET ASSEMBLY AND CHAIN

(a) Using a snap ring expander, remove the snap ring.

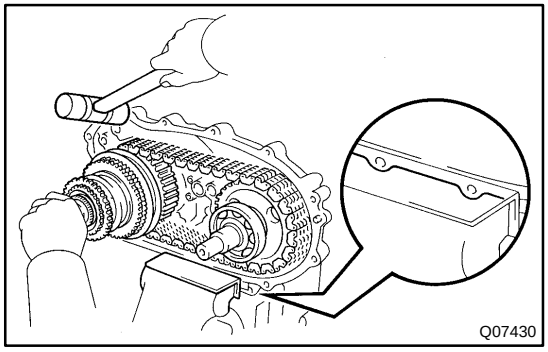
Q07430

(b) Using a plastic hammer, tap the rear case while with pulling the rear output shaft assembly and driven sprocket assembly.

HINT:

At the time of reassembly, please refer to the following item.

If necessary, heat the rear case to about 50 – 80˚C (122 – 176˚F).

(c) Remove the chain.

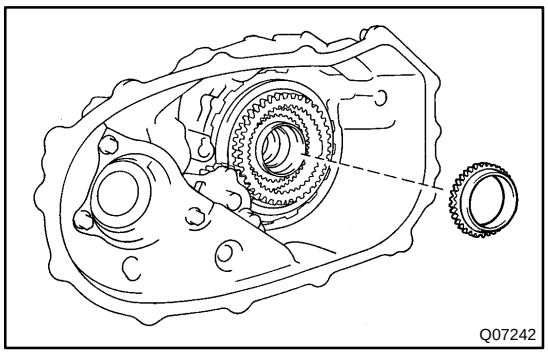

20. M/T:
REMOVE SYNCHRONIZER RING FROM INPUT SHAFT

HINT:

At the time of reassembly, please refer to the following items.

- ▲ Apply MP grease to the synchronizer ring.
- ▲ Align the synchronizer ring slots with the shifting keys, and install the synchronizer ring on the high and low clutch hub.

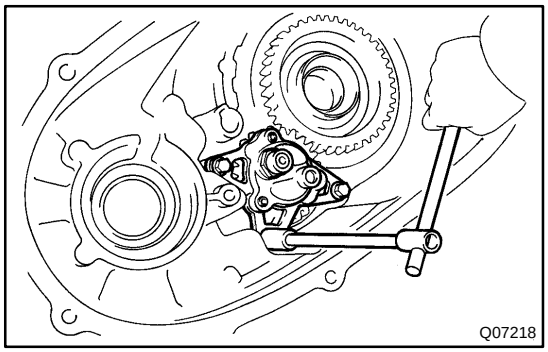

21. REMOVE SEPARATOR WITH OIL STRAINER AND MAGNET

Remove the 3 bolts, separator with the oil strainer and magnet.

Torque: 7.5 N·m (80 kgf·cm, 69 in.lbf)

22. REMOVE OIL PUMP BODY ASSEMBLY

Remove the 3 bolts and oil pump body assembly.

Torque: 7.5 N·m (80 kgf·cm, 69 in.lbf)

23. REMOVE OIL PUMP DRIVE GEAR

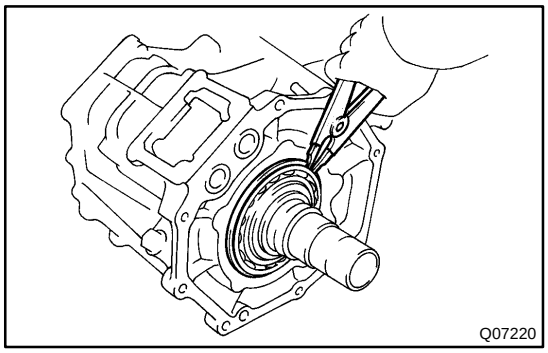

24. REMOVE PLANETARY GEAR ASSEMBLY WITH INPUT SHAFT ASSEMBLY

(a) Using a snap ring expander, remove the snap ring.

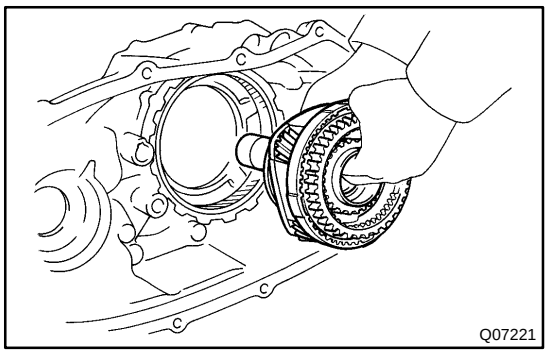

(b) Pull out the planetary gear assembly with the input shaft assembly.

HINT:

At the time of reassembly, please refer to the following item.

If necessary, heat the front case to about 50 – 80˚C (122 – 176˚F).

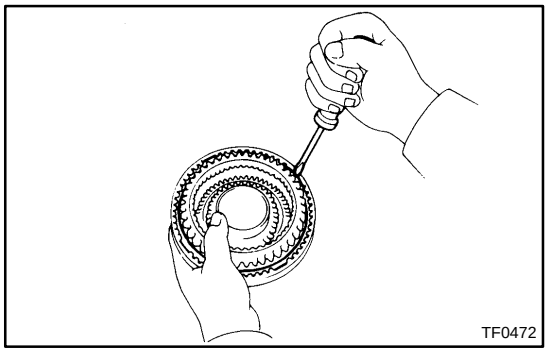

25. REMOVE LOW GEAR SPLINE PIECE

(a) Using a screwdriver, remove the snap ring.

HINT:

At the time of reassembly, please refer to the following item.

Be sure the end gap of the snap ring is not aligned with cutout portion of the planetary carrier.

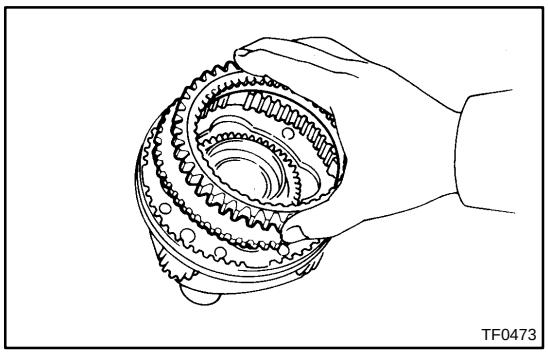
TF0473

(b) Remove the low gear spline piece.

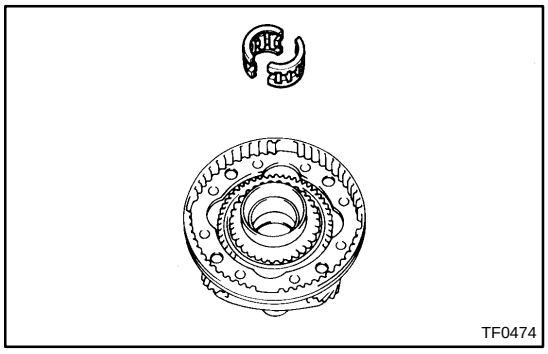
TF0474

26. REMOVE NEEDLE ROLLER BEARING FROM INPUT SHAFT ASSEMBLY

HINT:
At the time of reassembly, apply gear oil to the needle roller bearing.

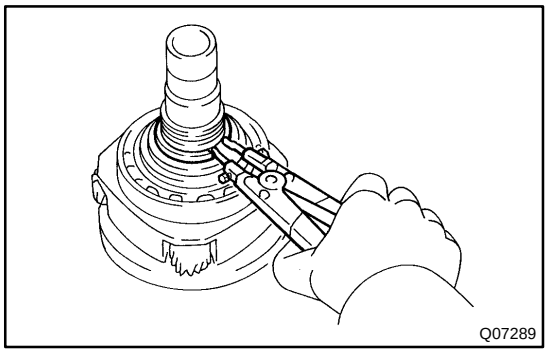
Q07289

27. REMOVE INPUT GEAR STOPPER AND THRUST BEARING

(a) Using a snap ring expander, remove the snap ring.

HINT:
At the time of reassembly, please refer to the following item.
Select a snap ring that allows 0.05 – 0.15 mm (0.0020 – 0.0059 in.) axial play.

Mark	Thickness mm (in.)
A	2.10 – 2.15 (0.0827 – 0.0846)
B	2.15 – 2.20 (0.0846 – 0.0866)
C	2.20 – 2.25 (0.0866 – 0.0886)
D	2.25 – 2.30 (0.0886 – 0.0906)
E	2.30 – 2.35 (0.0906 – 0.0925)
F	2.35 – 2.40 (0.0925 – 0.0945)
G	2.40 – 2.45 (0.0945 – 0.0965)
H	2.45 – 2.50 (0.0965 – 0.0984)
J	2.50 – 2.55 (0.0984 – 0.1004)
K	2.55 – 2.60 (0.1004 – 0.1024)
L	2.60 – 2.65 (0.1024 – 0.1043)
M	2.65 – 2.70 (0.1043 – 0.1063)
N	2.70 – 2.75 (0.1063 – 0.1083)
P	2.75 – 2.80 (0.1083 – 0.1102)
Q	2.80 – 2.85 (0.1102 – 0.1122)
R	2.85 – 2.90 (0.1122 – 0.1142)
S	2.90 – 2.95 (0.1142 – 0.1161)
T	2.95 – 3.00 (0.1161 – 0.1181)
U	3.00 – 3.05 (0.1181 – 0.1201)

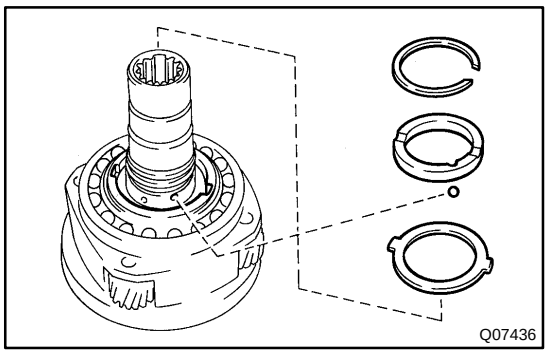

(b) Remove the input gear stopper, thrust washer and ball.
HINT:
At the time of reassembly, apply gear oil to the input gear stopper and thrust washer.

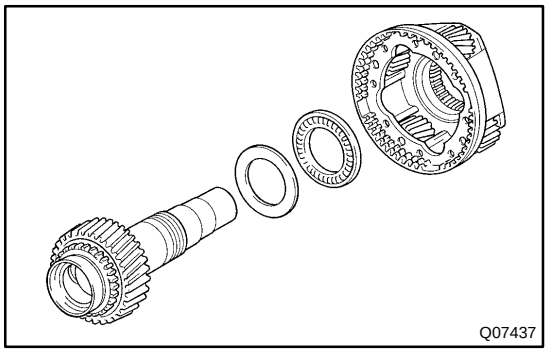

28. REMOVE INPUT SHAFT ASSEMBLY, THRUST BEARING AND RACE

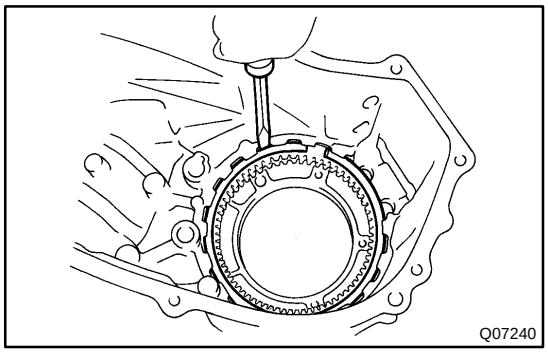

29. REMOVE PLANETARY RING GEAR
(a) Using a screwdriver, remove the snap ring.
HINT:
At the time of reassembly, please refer to the following item.
Be sure the end gap of the snap ring is not aligned with the upper side of the case.

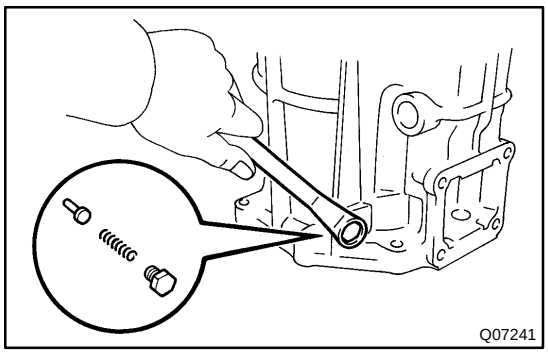

(b) Remove the head screw plug, spring and pin.
Torque: 19 N·m (190 kgf·cm, 14 ft·lbf)
HINT:
At the time of reassembly, apply liquid sealer to the plug threads.
Sealant:
Part No. 08833–00080, THREE BOND 1344,
LOCTITE 242 or equivalent

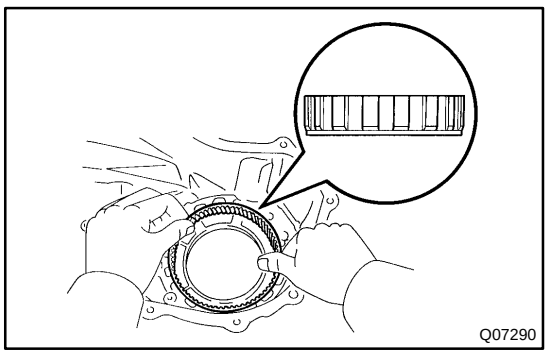

(c) Remove the planetary ring gear.
HINT:
At the time of reassembly, please refer to the following item.
Make sure that the ring gear is installed in the correct direction.

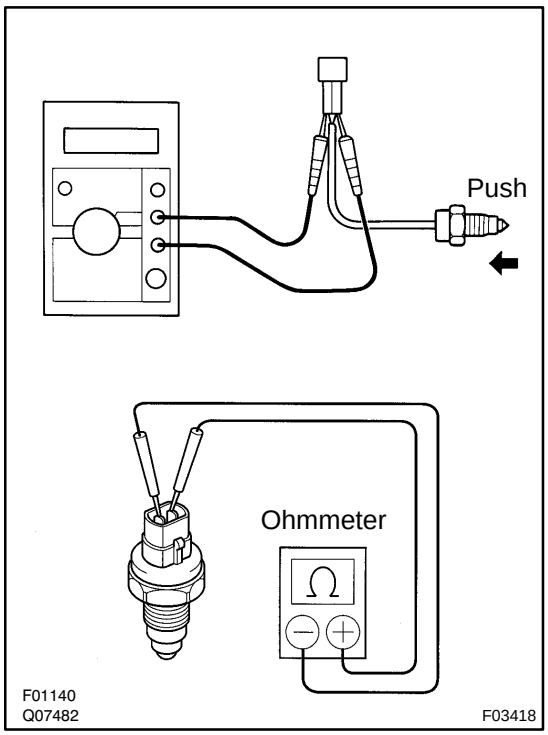

30. INSPECT SWITCH

Check that continuity exists between terminals as shown.

Switch Position	Specified Condition
Push	Continuity
Free	No continuity

If operation is not as specified, replace the switch.

TR00C–03

REASSEMBLY

Reassembly is in the reverse order of disassembly (See page TR–10).

HINT:

Coat all of the sliding and rotating surfaces with gear oil before reassembly.

OIL PUMP BODY

COMPONENTS

TR00D–05

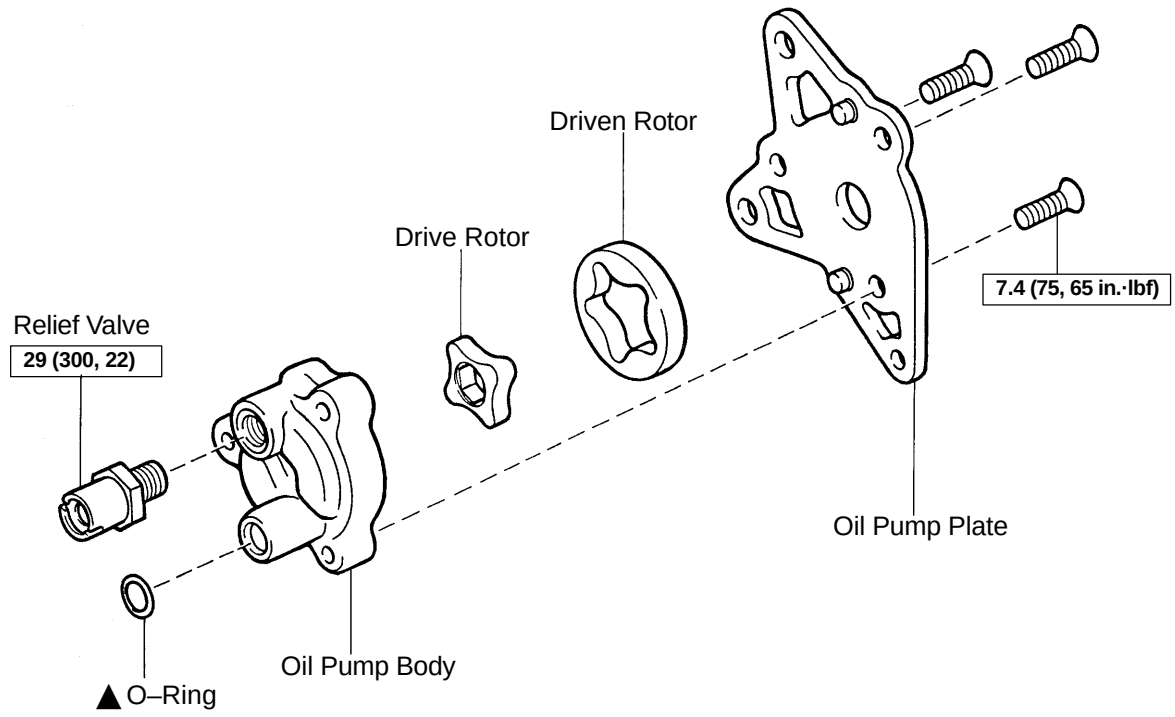

N·m (kgf·cm, ft·lbf) : Specified torque
▲ Non–reusable part

Q07245

TR01M–04

INSPECTION

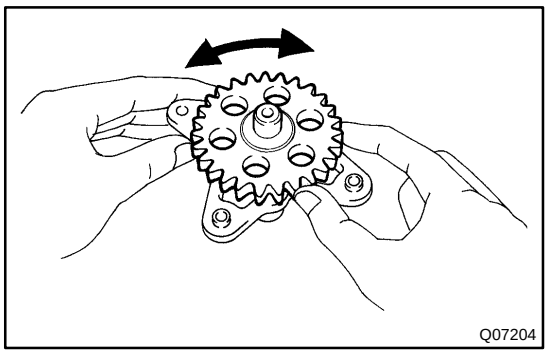

1. CHECK OIL PUMP OPERATION

Install the oil pump drive gear to the drive rotor, check that the drive rotor turns smoothly.

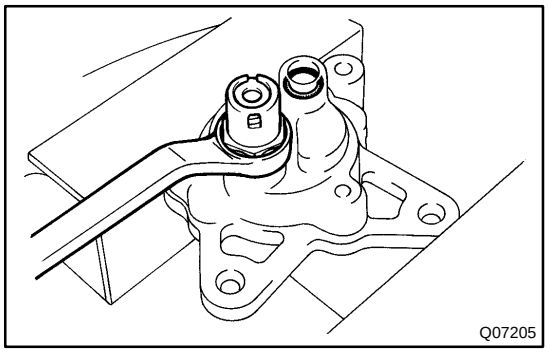

2. INSPECT ROTOR CLEARANCE

(a) Remove the relief valve and O–ring.
  (1) Mount the oil pump plate in a vise.
  (2) Remove the relief valve and O–ring from the oil pump body.
  Torque: 29 N·m (300 kgf·cm, 22 ft·lbf)

HINT:
At the time of reassembly, coat a new O–ring with gear oil and install it to the oil pump body.

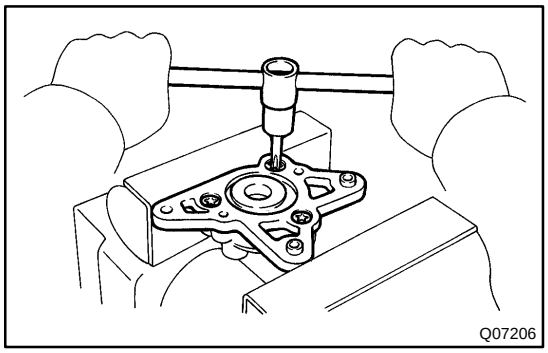

(b) Remove the oil pump plate.
  (1) Using a torx socket wrench, unscrew the 3 torx screws. (Torx socket wrench T30 09042–00010)
  Torque: 7.4 N·m (75 kgf·cm, 65 in.·lbf)
  (2) Remove the oil pump plate.

(c) Remove the drive rotor and driven rotor.

HINT:
At the time of reassembly, apply gear oil to both rotors.

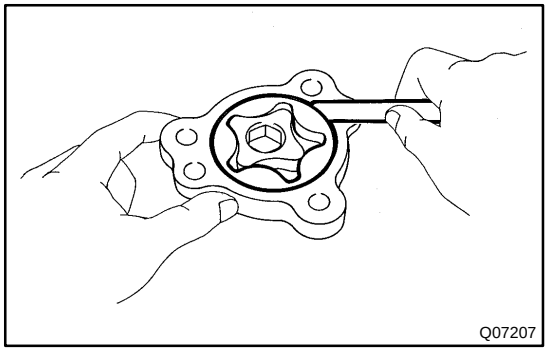

(d) Inspect the driven rotor body clearance.
  (1) Push the driven rotor to one side of the body.
  (2) Using a feeler gauge, measure the clearance.
  Standard clearance:
  0.09 – 0.16 mm (0.0035 – 0.0063 in.)
  Maximum clearance:
  0.16 mm (0.0063 in.)

If the clearance exceeds the maximum, replace the drive rotor, driven rotor or oil pump body.

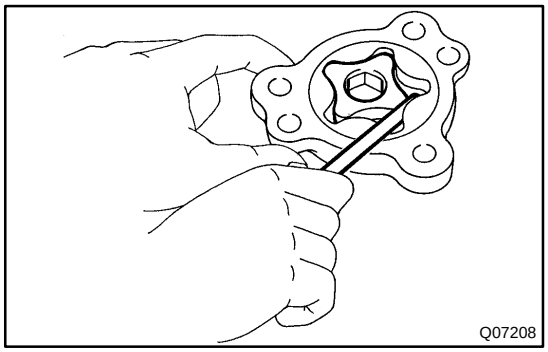

(e) Inspect both rotor tips clearance.
  Using a feeler gauge, measure the clearance between both rotor tips.
  Standard clearance:
  0.05 – 0.15 mm (0.0020 – 0.0059 in.)
  Maximum clearance:
  0.15 mm (0.0059 in.)

If the clearance exceeds the maximum, replace the drive rotor, driven rotor or oil pump body.

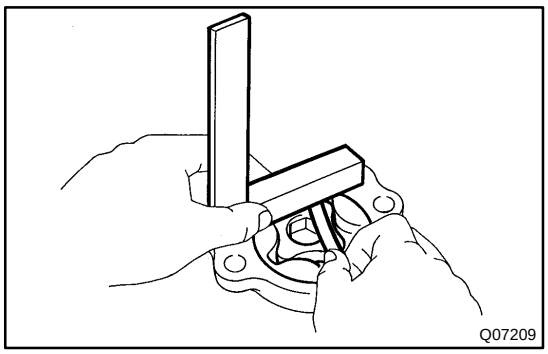

(f) Inspect both rotor sides clearance.
Using a steel square and feeler gauge, measure the clearance between the rotors and straight edge.
Standard clearance:
0.03 – 0.10 mm (0.0012 – 0.0039 in.)
Maximum clearance:
0.10 mm (0.0039 in.)

If the clearance exceeds the maximum, replace the drive rotor, driven rotor or oil pump body.

3. ASSEMBLE REMOVED PARTS

HINT:

Reassembly is in the reverse order of disassembly.

DRIVEN SPROCKET

COMPONENTS

TR00F–05

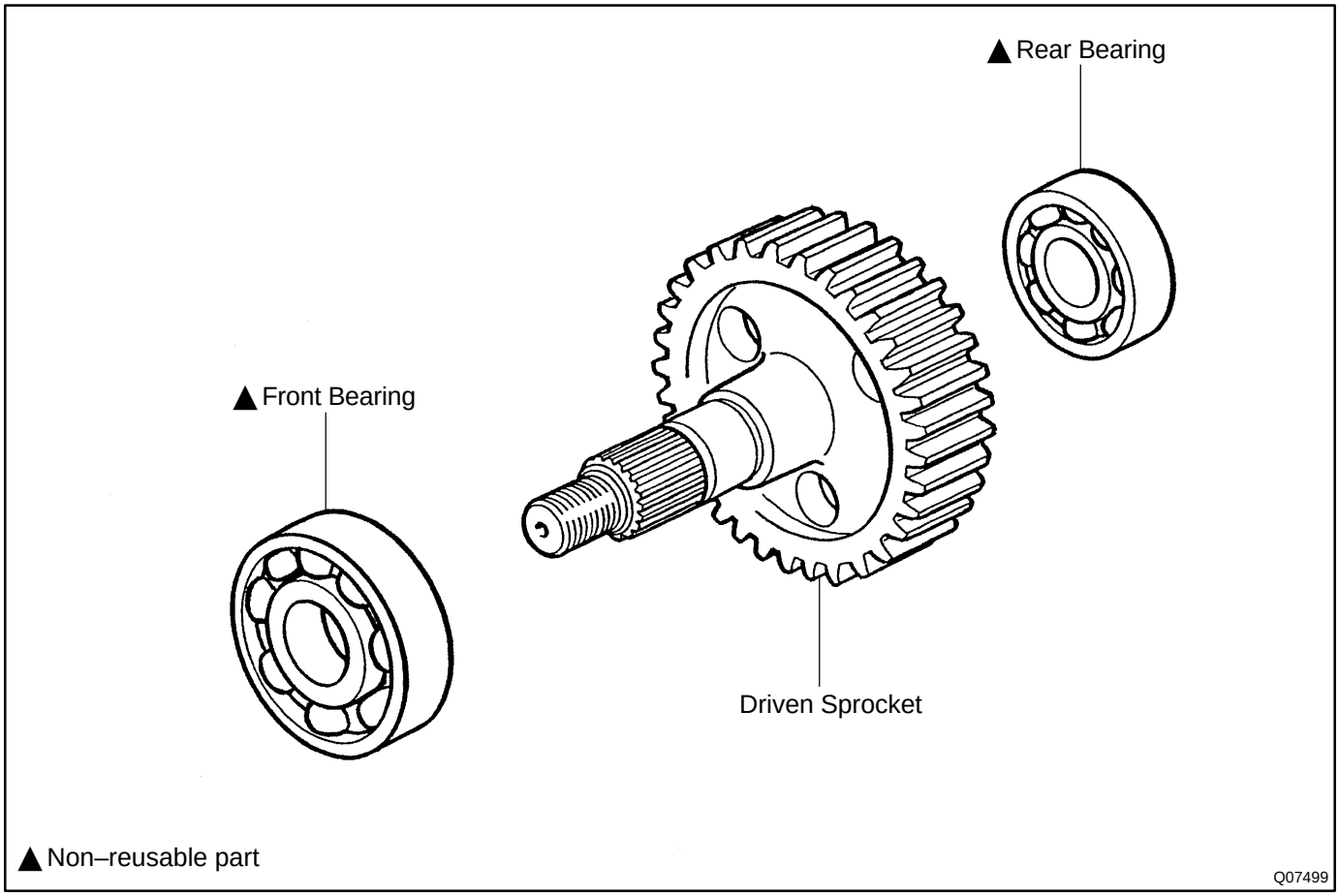

TR00G–05

REPLACEMENT

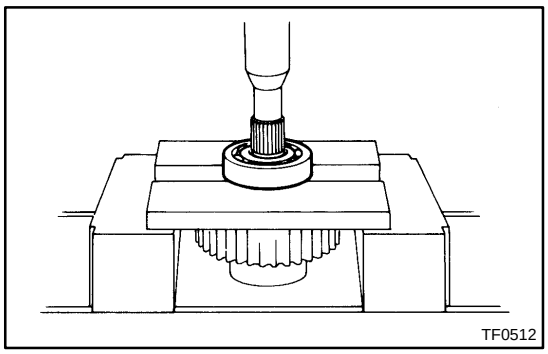

1. REMOVE FRONT BEARING

Using a press, remove the front bearing.

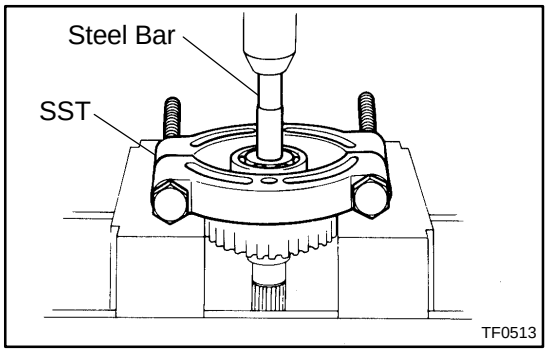

2. REMOVE REAR BEARING

Using SST, a press and steel bar, remove the rear bearing.

SST 09555–55010

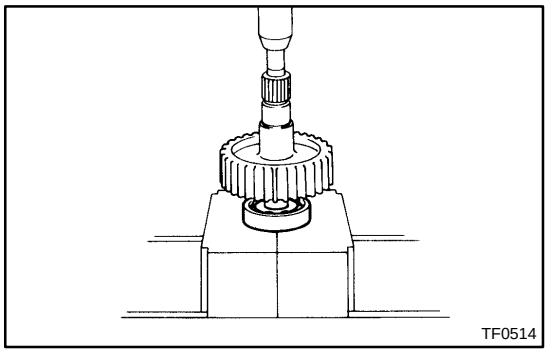

3. INSTALL REAR BEARING

Using a press, install a new rear bearing.

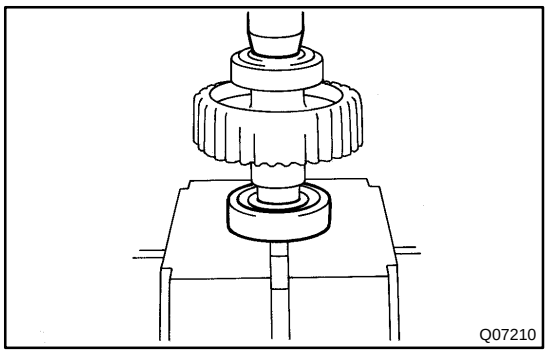

4. INSTALL FRONT BEARING

Using a press, install a new front bearing.

REAR OUTPUT SHAFT

COMPONENTS

TR09B–01

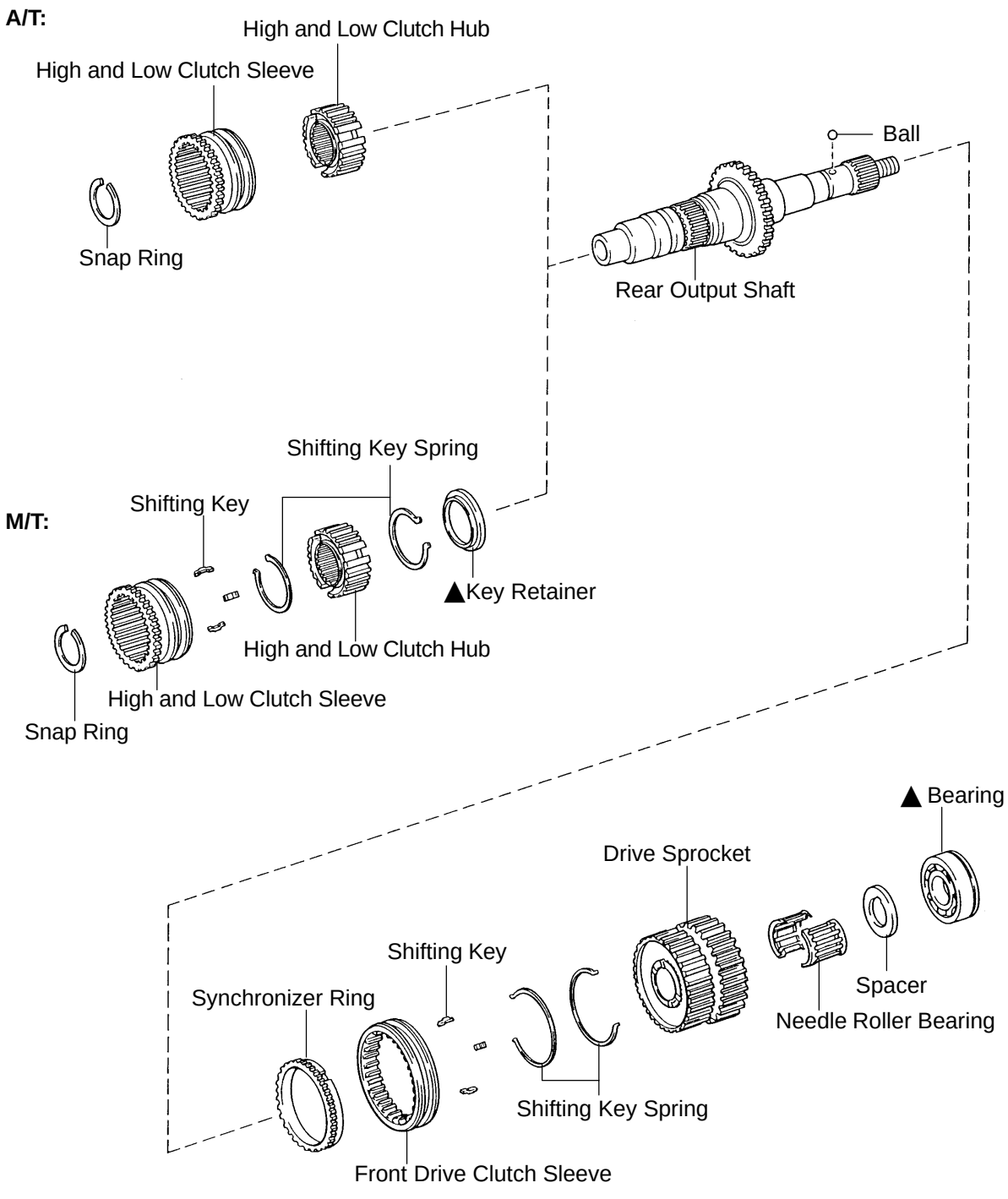

▲ Non–reusable part

N

F06540

TR09C–01

DISASSEMBLY

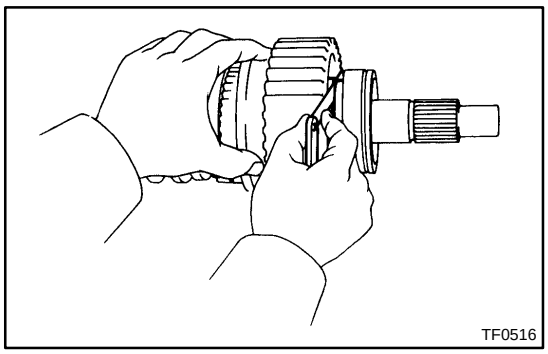
TF0516

1. INSPECT DRIVE SPROCKET THRUST CLEARANCE

Using a feeler gauge, measure the drive sprocket thrust clearance.

Standard clearance:
0.10 – 0.25 mm (0.0039 – 0.0098 in.)
Maximum clearance:
0.25 mm (0.0098 in.)

If the clearance exceeds the maximum, replace the drive sprocket.

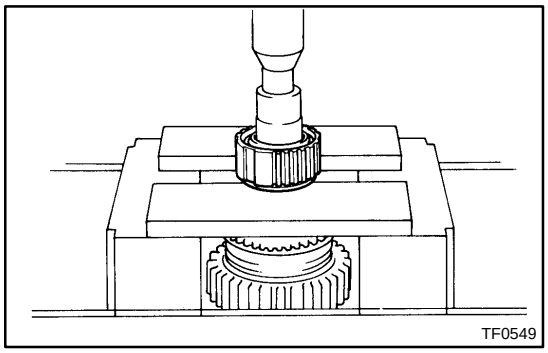
TF0549

2. M/T:

REMOVE HIGH AND LOW CLUTCH SLEEVE ASSEMBLY

(a) Using a snap ring expander, remove the snap ring.
(b) Remove the clutch sleeve and 3 shifting keys.
(c) Using a press, remove the clutch hub, 2 key springs and key retainer.

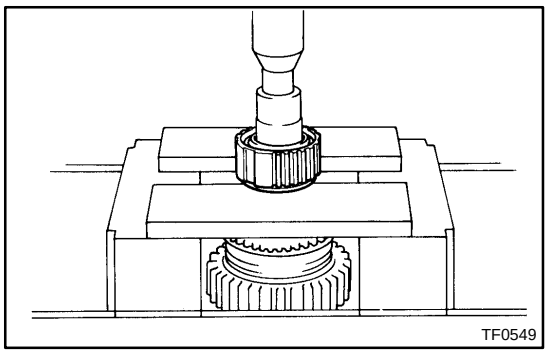
TF0549

3. A/T:

REMOVE HIGH AND LOW CLUTCH SLEEVE ASSEMBLY

(a) Using a snap ring expander, remove the snap ring.
(b) Remove the clutch sleeve.
(c) Using a press, remove the clutch hub.

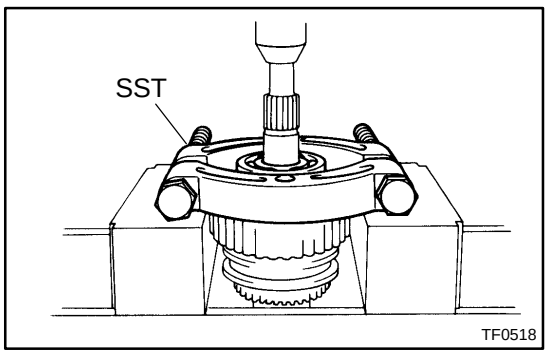

TF0518

4. REMOVE BEARING, SPACER AND DRIVE SPROCKET WITH FRONT DRIVE CLUTCH SLEEVE ASSEMBLY

(a) Using SST and a press, remove the bearing.
SST 09555–55010

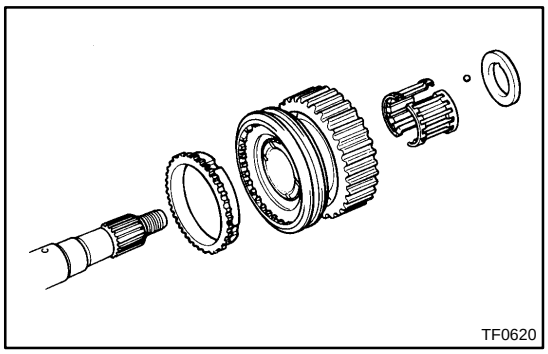
TF0620

(b) Remove the spacer and ball.
(c) Remove the drive sprocket with the front drive clutch sleeve assembly.
(d) Remove the needle roller bearing.
(e) Remove the synchronizer ring.
(f) Separate the front drive clutch sleeve assembly and drive sprocket.
(g) Remove the 3 shifting keys and 2 shifting key springs from the front drive clutch sleeve.

TR00J–04

INSPECTION

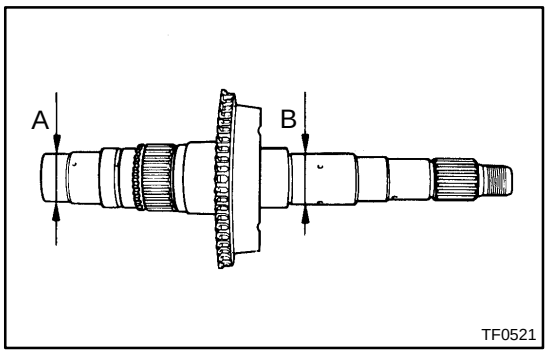

1. INSPECT REAR OUTPUT SHAFT

Using a micrometer, measure the outer diameter of the rear output shaft journal surface.

Minimum diameter:
Part A: 27.98 mm (1.1016 in.)
Part B: 36.98 mm (1.4561 in.)

If the outer diameter is less than the minimum, replace the rear output shaft.

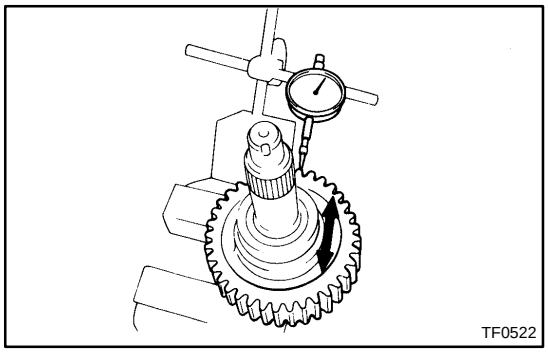

2. INSPECT DRIVE SPROCKET RADIAL CLEARANCE

Using a dial indicator, measure the radial clearance between the sprocket and shaft with the needle roller bearing installed.

Standard clearance:
0.010 – 0.055 mm (0.0004 – 0.0022 in.)
Maximum clearance:
0.055 mm (0.0022 in.)

If the clearance exceeds the maximum, replace the drive sprocket, rear output shaft or needle roller bearing.

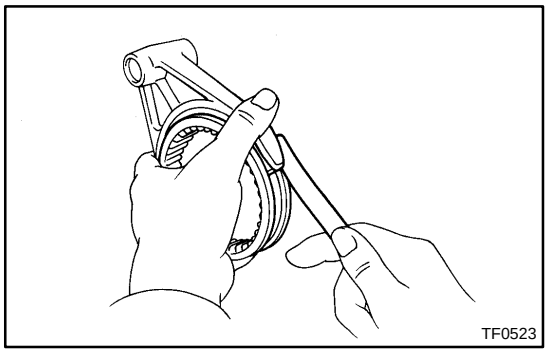

3. INSPECT FRONT DRIVE SHIFT FORK AND CLUTCH SLEEVE CLEARANCE

Using a feeler gauge, measure the clearance between the front drive shift fork and clutch sleeve.

Maximum clearance: 1.0 mm (0.039 in.)

If the clearance exceeds the maximum, replace the shift fork or clutch sleeve.

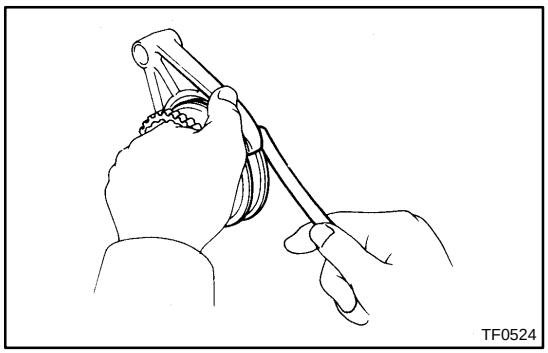

4. INSPECT HIGH AND LOW SHIFT FORK AND CLUTCH SLEEVE CLEARANCE

Using a feeler gauge, measure the clearance between the high and low shift fork and clutch sleeve.

Maximum clearance: 1.0 mm (0.039 in.)

If the clearance exceeds the maximum, replace the shift fork or clutch sleeve.

TR09D–01

REASSEMBLY

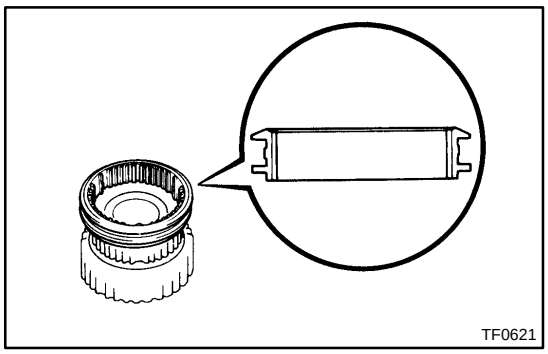
TF0621

1. INSTALL FRONT DRIVE CLUTCH SLEEVE ONTO DRIVE SPROCKET

(a) Install the front drive clutch sleeve onto the drive sprocket.

HINT:

Make sure to install the clutch sleeve in the correct direction.

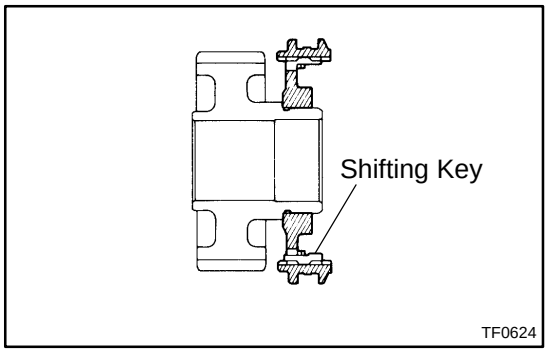

TF0624

(b) Install the 3 shifting keys and 2 springs.

NOTICE:

Position the key springs so that their end gaps are not aligned.

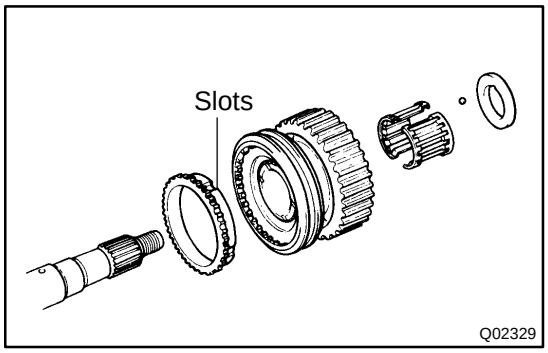

Q02329

2. INSTALL DRIVE SPROCKET WITH FRONT DRIVE CLUTCH SLEEVE ASSEMBLY AND SPACER

(a) Apply gear oil to the shaft and needle roller bearing.

(b) Place the synchronizer ring on the spline and align the ring slots with the shifting keys.

(c) Install the needle roller bearing in the drive sprocket.

(d) Install the drive sprocket with the front drive clutch sleeve assembly.

(e) Install the spacer to align it with the ball.

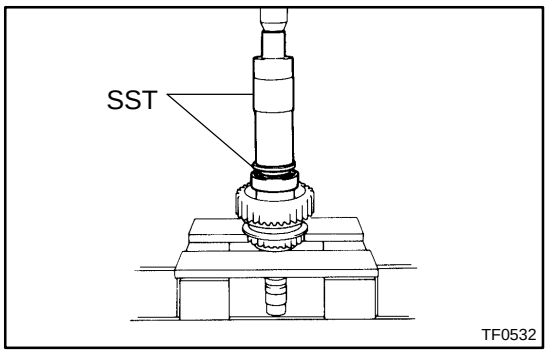

TF0532

3. INSTALL BEARING

Using SST and a press, install a new bearing with the outer race snap ring groove toward the rear.

SST 09316–60011 (09316–00011, 09316–00071)

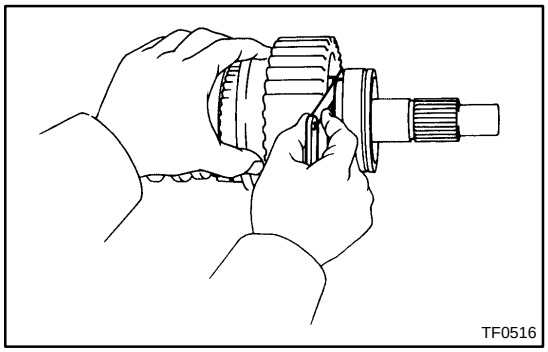
TF0516

4. INSPECT DRIVE SPROCKET THRUST CLEARANCE

Using a feeler gauge, measure the drive sprocket thrust clearance.

Standard clearance:

0.10 – 0.25 mm (0.0039 – 0.0098 in.)

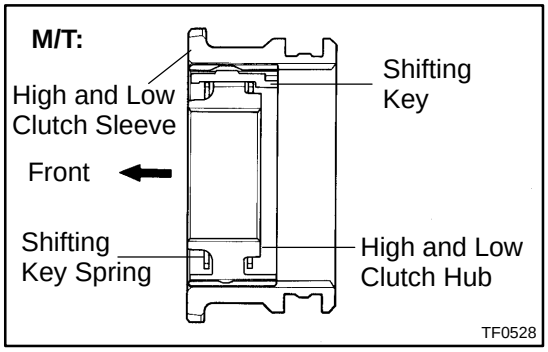

5. M/T:

INSERT HIGH AND LOW CLUTCH HUB ONTO CLUTCH SLEEVE

(a) Install the clutch hub and 3 shifting keys onto the clutch sleeve.

NOTICE:

Make sure that the high and low clutch hub is installed facing in the correct direction.

(b) Install the 2 shifting key springs under the shifting keys.

NOTICE:

Position the key springs so that their end gaps are not aligned.

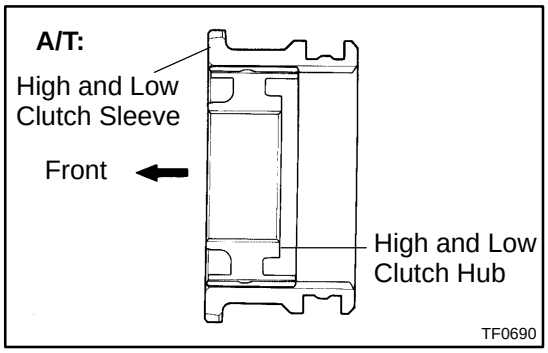

6. A/T:

INSERT HIGH AND LOW CLUTCH HUB ONTO CLUTCH SLEEVE

NOTICE:

Make sure that the high and low clutch hub is installed facing in the correct direction.

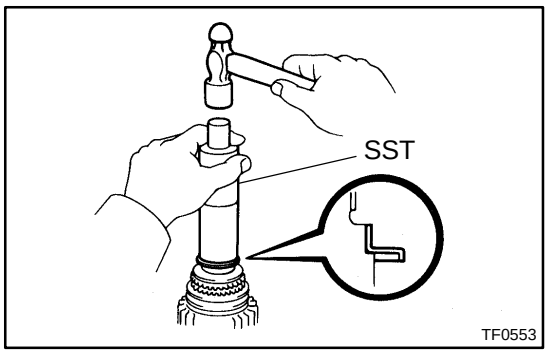

7. M/T:

INSTALL HIGH AND LOW CLUTCH HUB ASSEMBLY

(a) Using SST and a hammer, drive in a new key retainer.

SST 09316–60011 (09316–00011)

NOTICE:

Be careful not to deform or damage the key retainer.

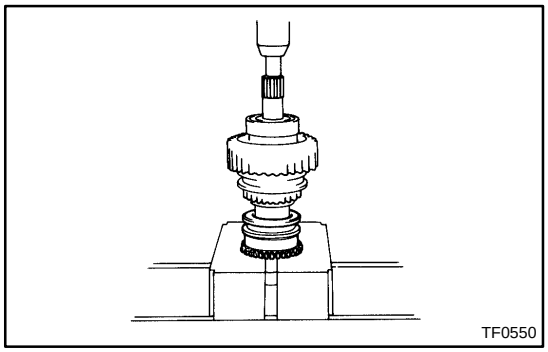

(b) Using a press, install the high and low clutch hub assembly.

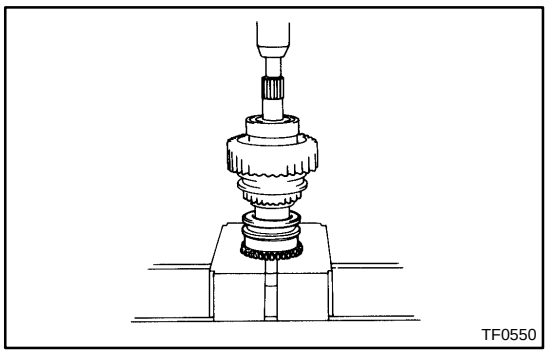
TF0550

8. A/T:
INSTALL HIGH AND LOW CLUTCH HUB ASSEMBLY

Using a press, install the high and low clutch hub assembly.

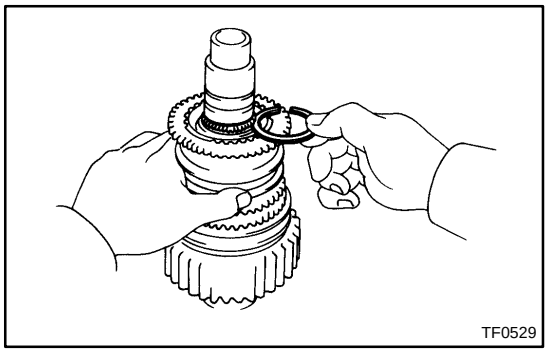
TF0529

9. INSTALL SNAP RING

Select a snap ring that allows the minimum axial play and install it to the shaft.

Mark	Thickness mm (in.)
A	2.10 – 2.15 (0.0827 – 0.0846)
B	2.15 – 2.20 (0.0846 – 0.0866)
C	2.20 – 2.25 (0.0866 – 0.0886)
D	2.25 – 2.30 (0.0886 – 0.0906)
E	2.30 – 2.35 (0.0906 – 0.0925)
F	2.35 – 2.40 (0.0925 – 0.0945)
G	2.40 – 2.45 (0.0945 – 0.0965)
H	2.45 – 2.50 (0.0965 – 0.0984)
J	2.50 – 2.55 (0.0984 – 0.1004)
K	2.00 – 2.05 (0.0787 – 0.0807)
L	2.05 – 2.10 (0.0807 – 0.0827)

INPUT SHAFT

COMPONENTS

TR00L–05

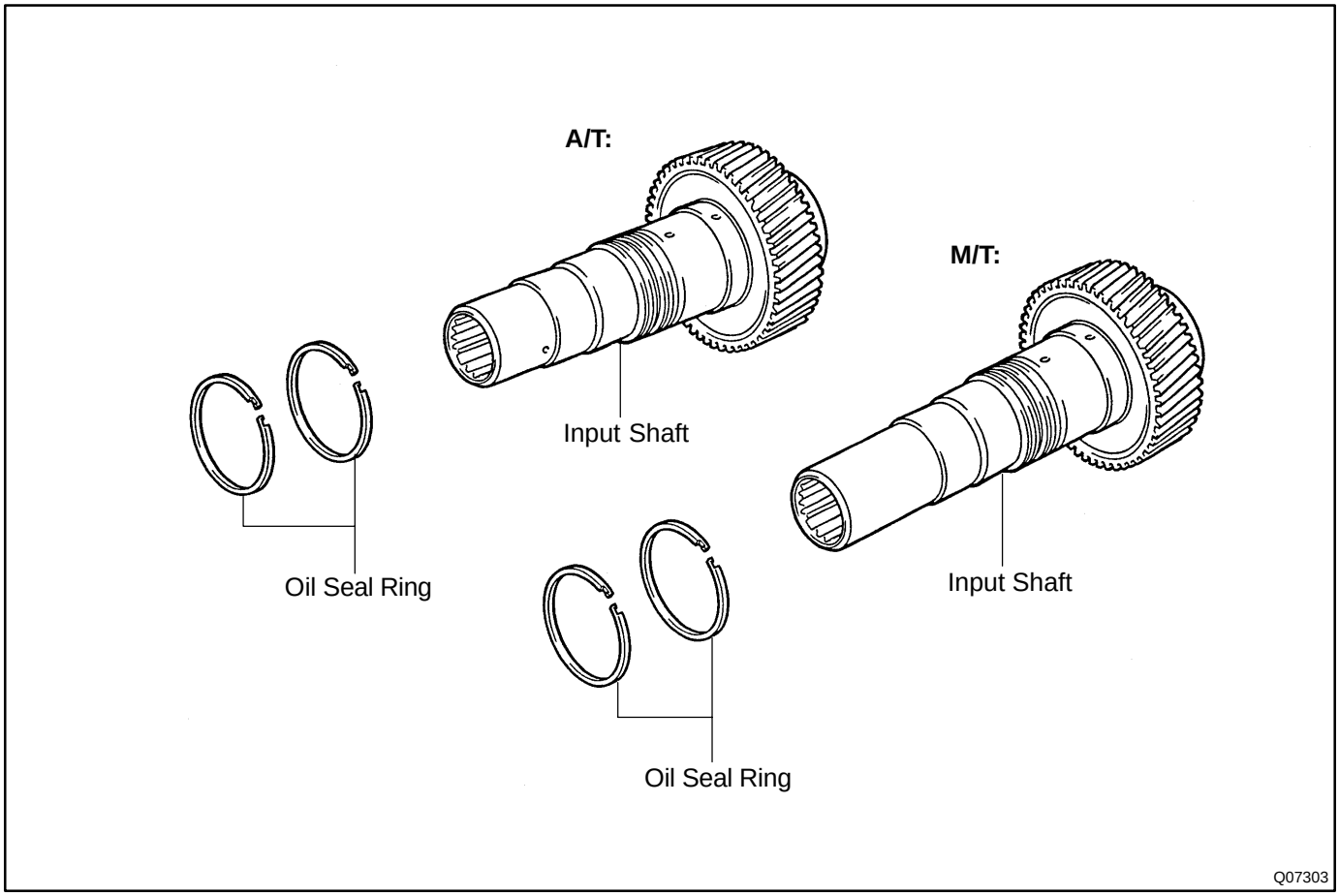

TR00M–04

INSPECTION

1. REMOVE OIL SEAL RING

Remove the 2 oil seal rings.

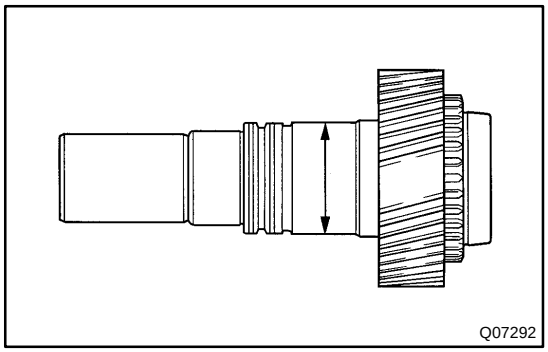

2. INSPECT INPUT SHAFT

(a) Using a micrometer, measure the outer diameter of the input shaft journal surface.

Minimum diameter: 47.59 mm (1.8736 in.)

If the outer diameter is less than the minimum, replace the input shaft.

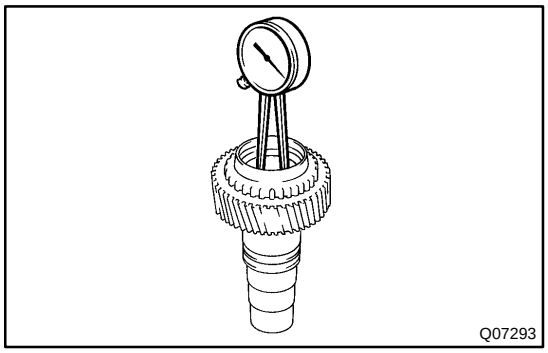

(b) Using a dial indicator, measure the inside diameter of the input shaft bushing.

Maximum inside diameter: 39.14 mm (1.5409 in.)

If the inside diameter exceeds the maximum, replace the input shaft.

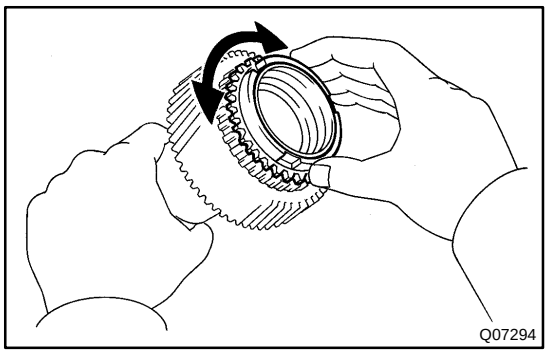

3. M/T:

INSPECT SYNCHRONIZER RING

(a) Turn the ring and push it in to check the braking action.

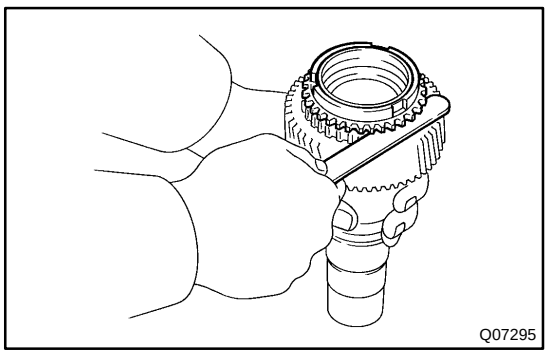

(b) Using a feeler gauge, measure the clearance between the synchronizer ring back and the input shaft spline end.

Standard clearance:

1.05 – 1.85 mm (0.0413 – 0.0728 in.)

Minimum clearance:

0.80 mm (0.0315 in.)

If the clearance is less than the minimum, replace the synchronizer ring.

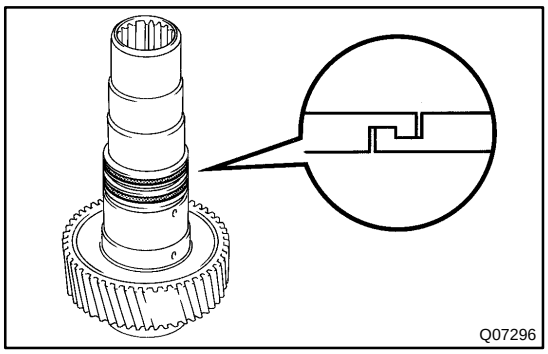

4. INSTALL OIL SEAL RING

Install the 2 oil seal rings.

HINT:

- ▲ Apply gear oil to the oil seal ring.
- ▲ Hang securely to eliminate clearance.

PLANETARY GEAR

COMPONENTS

TR00N–05

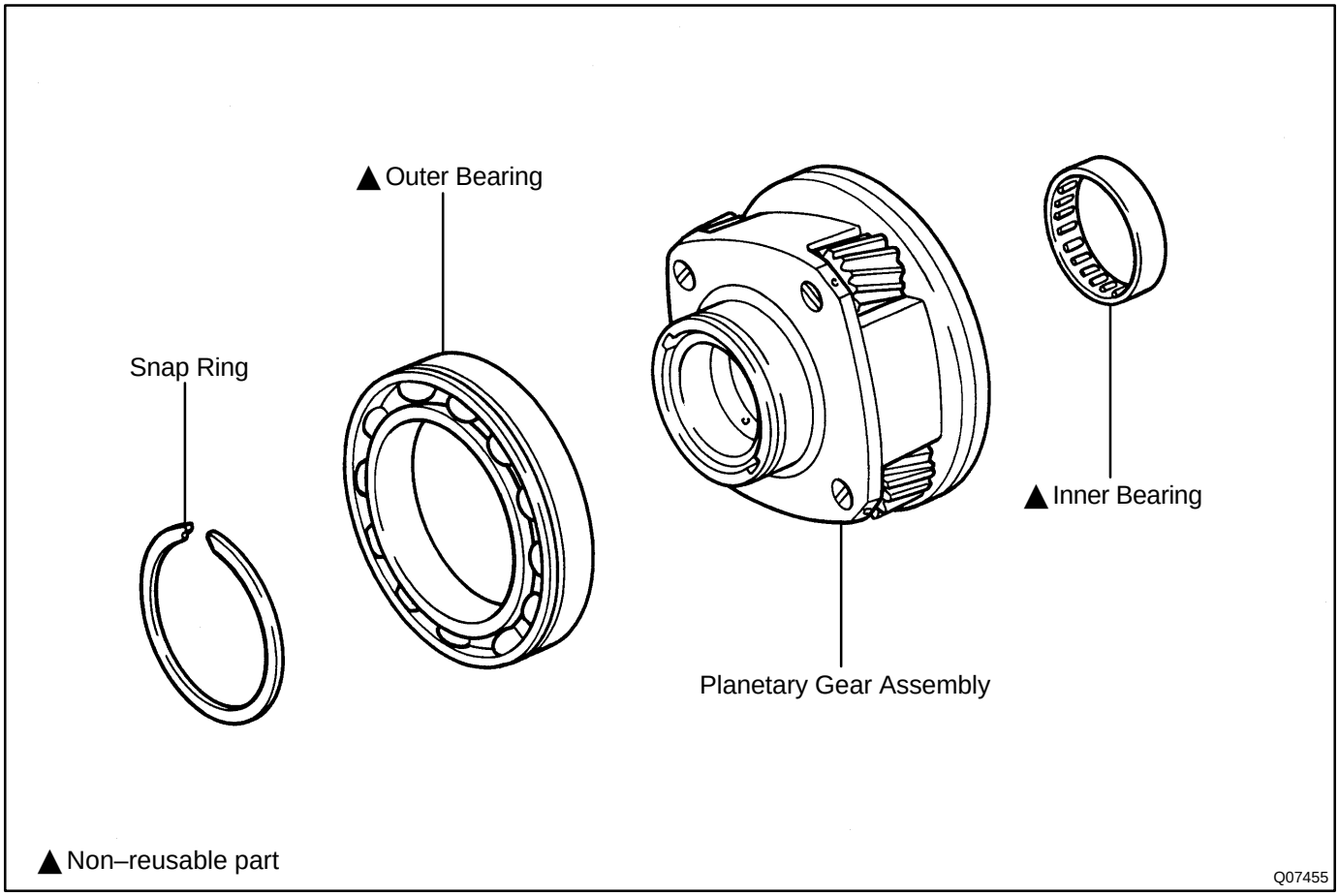

TR00O–05

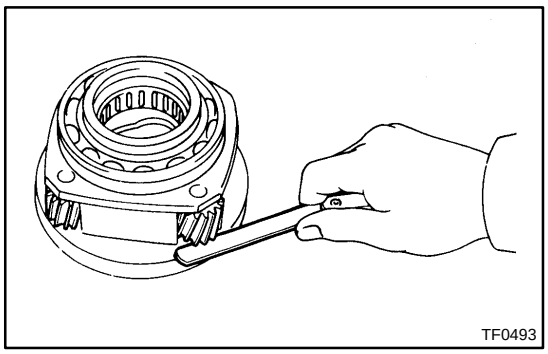
TF0493

INSPECTION

1. INSPECT PINION GEAR THRUST CLEARANCE

Using a feeler gauge, measure the planetary pinion gear thrust clearance.

Standard clearance:
0.11 – 0.84 mm (0.0043 – 0.0331 in.)
Maximum clearance:
0.84 mm (0.0331 in.)

If the clearance exceeds the maximum, replace the planetary gear assembly.

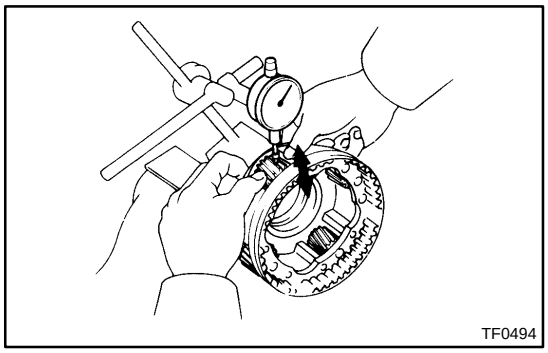
TF0494

2. INSPECT PLANETARY PINION GEAR RADIAL CLEARANCE

Using a dial indicator, measure the planetary pinion gear radial clearance.

Standard clearance:
0.009 – 0.038 mm (0.0004 – 0.0015 in.)
Maximum clearance:
0.038 mm (0.0015 in.)

If the clearance exceeds the maximum, replace the planetary gear assembly.

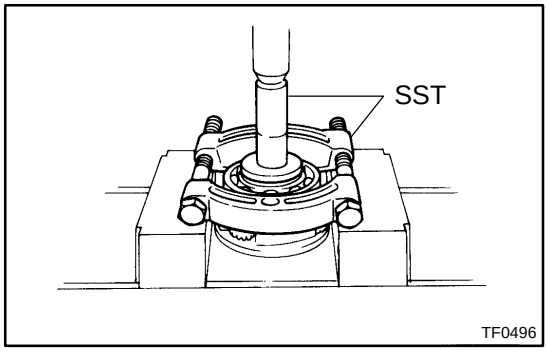

TF0496

3. IF NECESSARY, REPLACE PLANETARY GEAR OUTER BEARING

(a) Using a snap ring expander, remove the snap ring.

(b) Using SST and a press, remove the bearing.
SST 09554–30011, 09555–55010

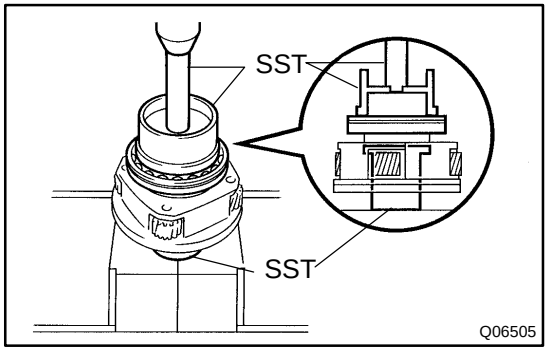

Q06505

(c) Using SST and a press, install a new bearing with the groove facing forward.
SST 09223–15020, 09515–30010, 09950–70010 (09951–07100)

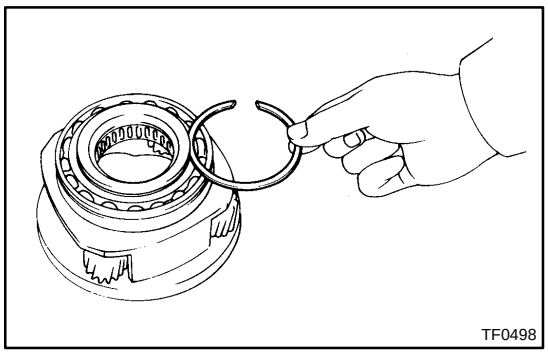

(d) Select a snap ring that allows the minimum axial play.

Mark	Thickness mm (in.)
1	1.45 – 1.50 (0.0571 – 0.0591)
2	1.50 – 1.55 (0.0591 – 0.0610)
3	1.55 – 1.60 (0.0610 – 0.0630)
4	1.60 – 1.65 (0.0630 – 0.0650)
5	1.65 – 1.70 (0.0650 – 0.0669)

(e) Using a snap ring expander, install a snap ring.

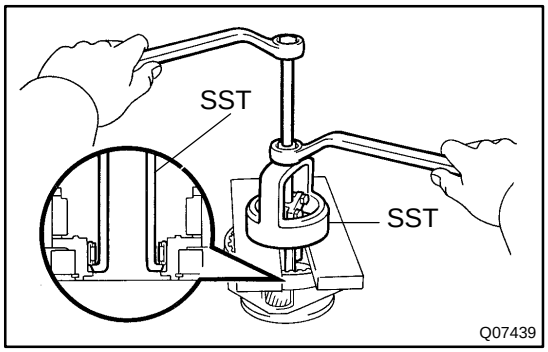

4. IF NECESSARY, REPLACE PLANETARY GEAR INNER BEARING

(a) Using SST, remove the bearing.
SST 09612–65014 (09612–01030, 09612–01050)

NOTICE:
Hang SST securely to the clearance between the inner bearing and planetary gear.

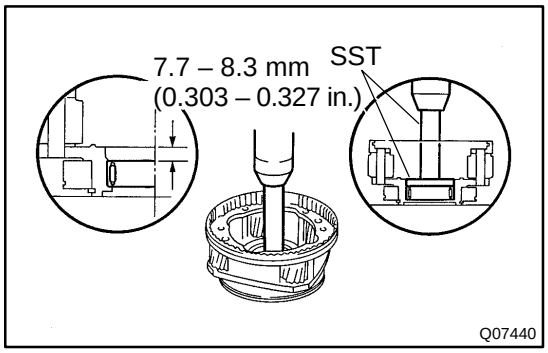

(b) Using SST and a press, install a new bearing.
SST 09950–60010 (09951–00570), 09950–70010 (09951–07100)
Bearing press in depth: 7.7 – 8.3 mm (0.303 – 0.327 in.)

OIL SEAL

COMPONENTS

TR00P–05

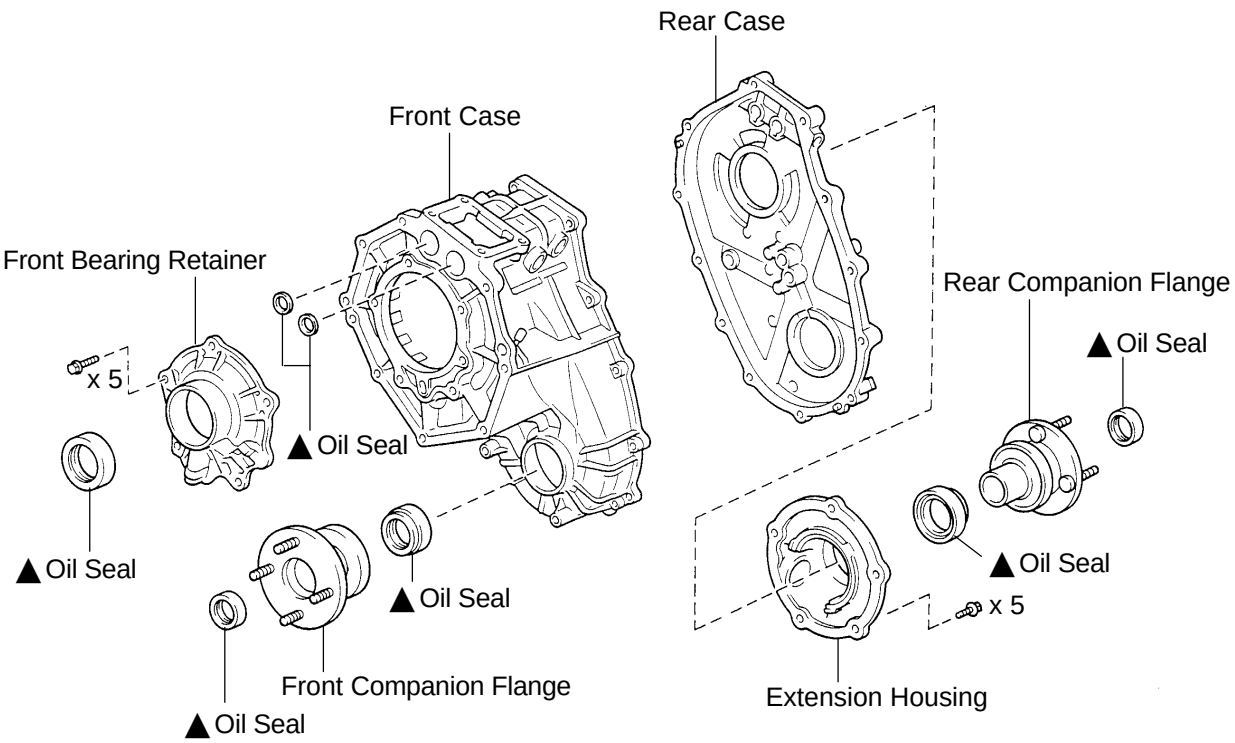

TR07S–02

REPLACEMENT

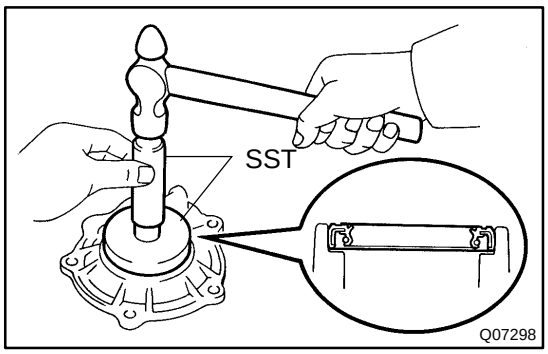

1. IF NECESSARY, REPLACE FRONT BEARING RETAINER OIL SEAL

(a) Using a screwdriver and hammer, drive out the oil seal.

(b) Using SST and a hammer, drive in a new oil seal until its surface is flush with the retainer upper surface.
SST 09950–60010 (09951–00590), 09950–70010 (09951–07100)

(c) Coat the lip of the oil seal with MP grease.

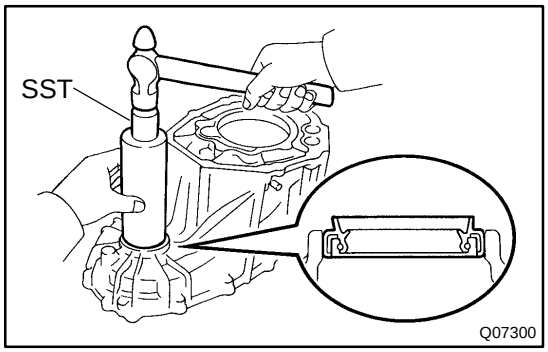

2. IF NECESSARY, REPLACE FRONT CASE OIL SEAL

(a) Using a screwdriver and hammer, drive out the oil seal.

(b) Using SST and a hammer, drive in a new oil seal until its surface is flush with the case upper surface.
SST 09316–60011 (09316–00011)

(c) Coat the lip of the oil seal with MP grease.

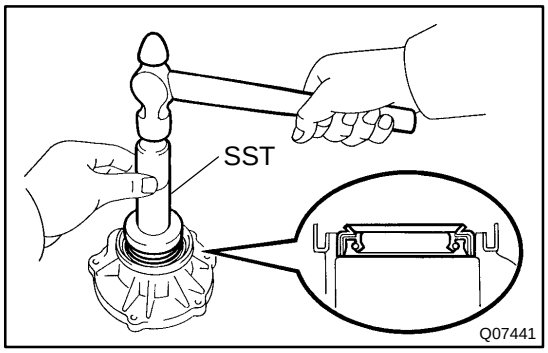

3. IF NECESSARY, REPLACE EXTENSION HOUSING OIL SEAL

(a) Using a screwdriver and hammer, drive out the oil seal.

(b) Using SST and a hammer, drive in a new oil seal until its surface is flush with the housing upper surface.
SST 09554–22010

(c) Coat the lip of the oil seal with MP grease.

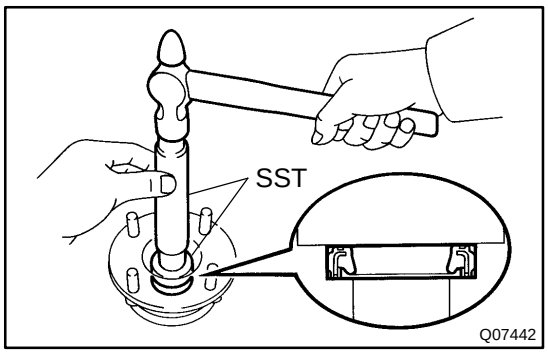

4. IF NECESSARY, REPLACE FRONT AND REAR COMPANION FLANGE OIL SEALS

(a) Using a screwdriver and hammer, drive out the 2 oil seals from the 2 flanges.

(b) Using SST and a hammer, drive in 2 new oil seals.
SST 09950–60010 (09951–00220, 09951–00350, 09952–06010), 09950–70010 (09951–07100)

(c) Coat the lip of the oil seal with MP grease.

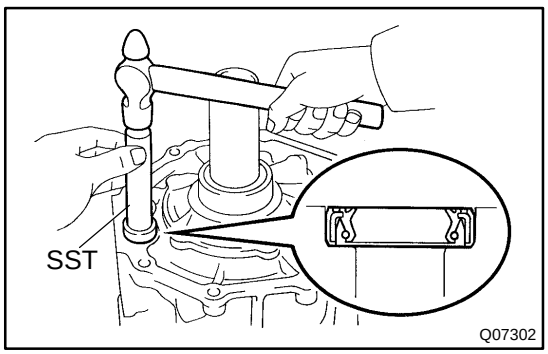

5. IF NECESSARY, REPLACE SHIFT FORK SHAFT OIL SEAL

(a) Using a screwdriver, pry out the 2 oil seals.

(b) Using SST and a hammer, drive in 2 new oil seals.
SST 09304–12012
Oil seal drive in depth:
–0.5 – 0.5 mm (–0.020 – 0.020 in.)

(c) Coat the lip of the oil seal with MP grease.

TRANSFER SYSTEM

TR00V–01

PRECAUTION

When working with FIPG material, you must observe the following.

- **Using a razor blade and gasket scraper, remove all the old packing (FIPG) material from the gasket surfaces.**
- **Thoroughly clean all components to remove all the loose material.**
- **Clean both sealing surfaces with a non–residue solvent.**
- **Apply FIPG in approx. 1 mm (0.04 in.) wide bead along the sealing surface.**
- **Parts must be assembled within 10 minutes of application. Otherwise, the packing (FIPG) material must be removed and reapplied.**

TROUBLESHOOTING

PROBLEM SYMPTOMS TABLE

TR09F–02

Use the table below to help you find the cause of the problem. The numbers indicate the priority of the likely cause of the problem. Check each part in order. If necessary, replace these parts.

Symptom	Suspect Area	See page
Noise	1. Oil (Level low)	TR–6
	2. Oil (Wrong)	TR–6
	3. Transfer faulty	TR–7
Oil leakage	1. Oil (Level too high)	TR–6
	2. Gasket (Damaged)	TR–7
	3. Oil seal (Worn or damaged)	TR–39
	4. O–ring (Worn or damaged)	TR–7
Shift from 2WD to 4WD (4HI) impossible	1. 4WD fuse	–
	2. Wire harness	–
	3. Touch select 2–4 switch	TR–42
	4. Vehicle speed sensor	BE–52
	5. 4WD position switch	TR–8
	6. 4HI indicator light	BE–52
	7. Actuator assembly	TR–42
	8. A.D.D. control system	SA–50
	9. 4WD control ECU	TR–42
	10. Transfer assembly	TR–7
Shift from 4WD (4HI) to 4WD (4LO) impossible	1. Touch select high–low switch	TR–42
	2. Vehicle speed sensor	BE–52
	3. L4 position switch	TR–8
	4. Park/neutral position switch	DI–430
	5. 4LO indicator switch	BE–52
	6. Actuator assembly	TR–42
	7. Wire harness	–
	8. 4WD control ECU	TR–42
Shift from 4WD (4HI) to 2WD impossible	1. 4WD fuse	–
	2. Wire harness	–
	3. Touch select 2–4 switch	TR–42
	4. Vehicle speed sensor	BE–52
	5. 4WD position switch	TR–8
	6. 4HI indicator light	BE–52
	7. Actuator assembly	TR–42
	8. A.D.D. control system	SA–50
	9. 4WD control ECU	TR–42
	10. Transfer assembly	TR–7
Shift from 4WD (4LO) to 4WD (4HI) impossible	1. Touch select high–low switch	TR–42
	2. Vehicle speed sensor	BE–52
	3. L4 position switch	TR–8
	4. Park/neutral position switch	DI–430
	5. 4LO indicator switch	BE–52
	6. Actuator assembly	TR–42
	7. Wire harness	–
	8. 4WD control ECU	TR–42

TRANSFER UNIT

TR09G–01

COMPONENTS

HINT:

VF2BM transfer is used for the vehicles with 2UZ–FE engine installed.

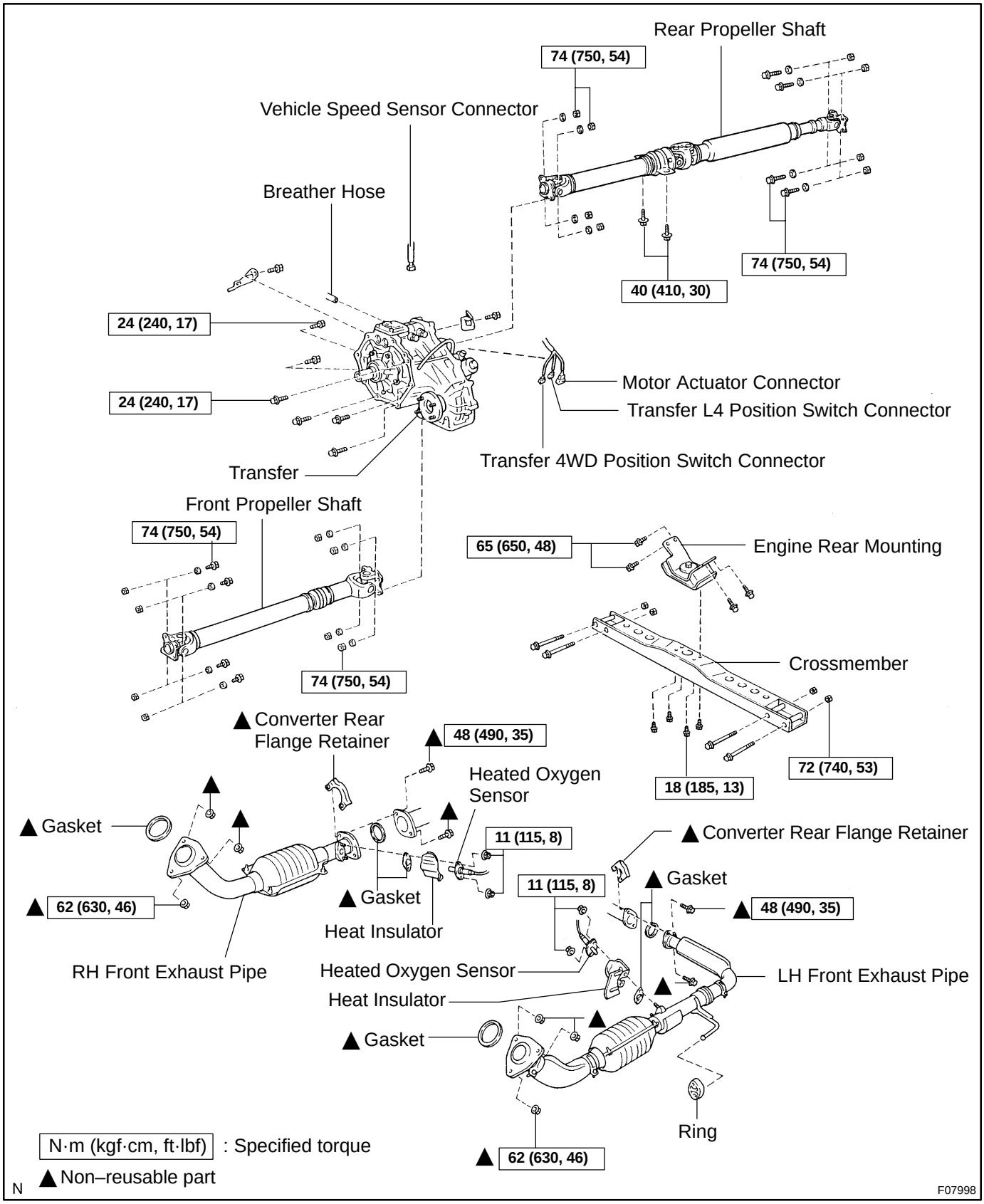

TR09H–01

REMOVAL

HINT:

Turn the touch select 2–4 switch ON.

1. DISCONNECT BREATHER HOSE

Disconnect the breather hose from the transfer.

2. RAISE VEHICLE AND DRAIN TRANSFER OIL

3. REMOVE LH AND RH FRONT EXHAUST PIPES (See page EM–117)

4. REMOVE FRONT AND REAR PROPELLER SHAFTS (See page PR–10)

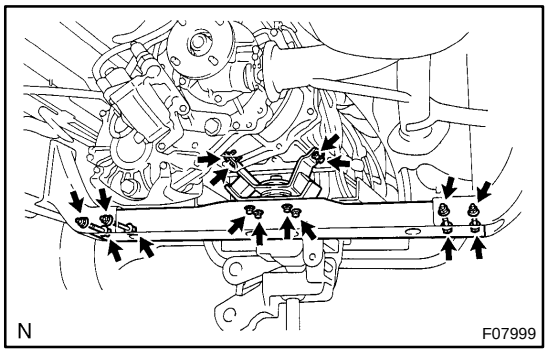

5. REMOVE CROSSMEMBER

(a) Support the transmission rear side with a transmission jack.

(b) Remove the 4 bolts.

(c) Remove the 4 bolts, nuts and crossmember.

6. REMOVE ENGINE REAR MOUNTING

Remove the 4 bolts and engine rear mounting from the transfer adaptor.

7. DISCONNECT VEHICLE SPEED SENSOR, TRANSFER DETECTION SWITCHES AND MOTOR ACTUATOR CONNECTORS (See page TR–3)

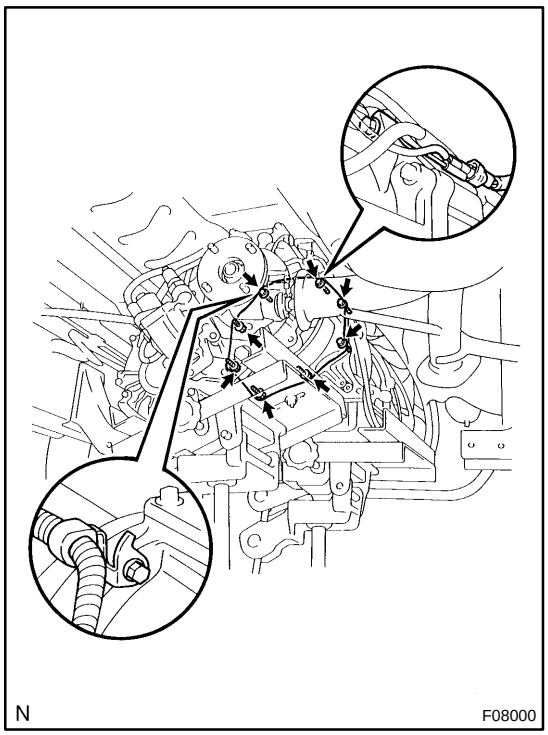

8. REMOVE TRANSFER

(a) Support the transfer with another transmission jack.
(b) Remove the 8 transfer mounting bolts.
(c) Pull out the transfer from the transfer adaptor down and toward the rear.

TR09I–01

INSTALLATION

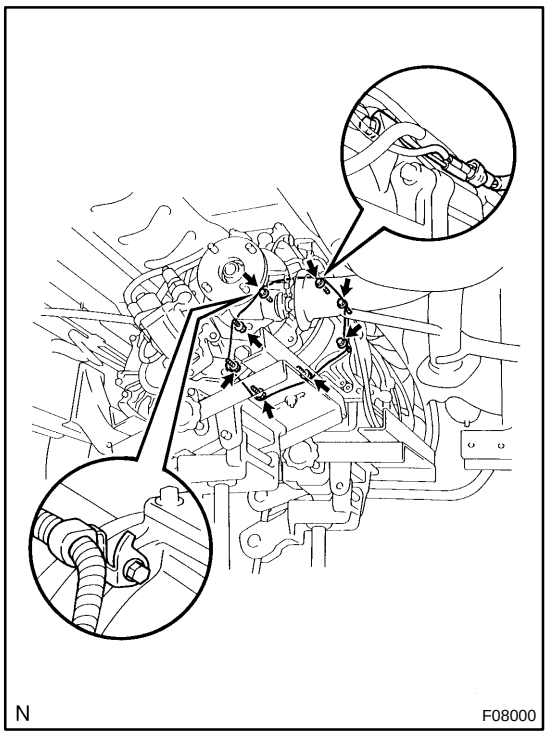

1. RAISE VEHICLE

2. INSTALL TRANSFER

Raise the transfer and install it to the transfer adaptor with the 8 transfer mounting bolts.

Torque: 24 N·m (240 kgf·cm, 17 ft·lbf)

NOTICE:

Take care not to damage the lip of the transfer adaptor rear oil seal with the transfer input shaft.

3. CONNECT VEHICLE SPEED SENSOR, TRANSFER DETECTION SWITCHES AND MOTOR ACTUATOR CONNECTORS (See page TR–3)

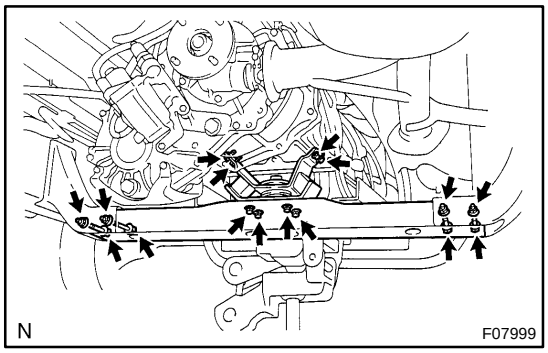

4. INSTALL ENGINE REAR MOUNTING

Install the engine rear mounting to the transfer adaptor with the 4 bolts.

Torque: 65 N·m (650 kgf·cm, 48 ft·lbf)

5. INSTALL CROSSMEMBER

(a) Install the crossmember with the 4 bolts and nuts.

Torque: 72 N·m (740 kgf·cm, 53 ft·lbf)

(b) Install the the 4 bolts.

Torque: 18 N·m (185 kgf·cm, 13 ft·lbf)

(c) Remove the transmission jacks.

6. INSTALL FRONT AND REAR PROPELLER SHAFTS (See page PR–15)

7. INSTALL LH AND RH FRONT EXHAUST PIPES (See page EM–117)

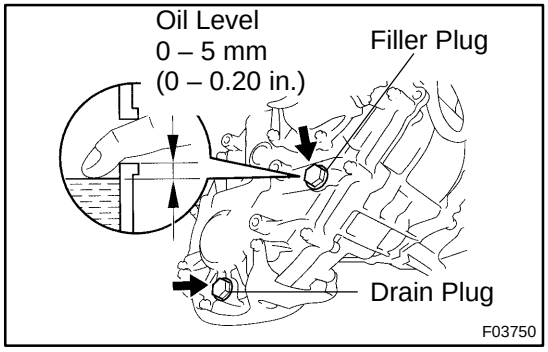

8. FILL TRANSFER OIL

Oil grade: API GL–4 or GL–5
Viscosity: SAE 75W–90
Capacity: 1.0 liters (1.1 US qts, 0.9 Imp. qts)
Torque: 37 N·m (380 kgf·cm, 27 ft·lbf)

9. CONNECT BREATHER HOSE

Connect the breather hose to the transfer.

Hose installation depth: 13 mm (0.51 in.) or more

10. DO ROAD TEST

Check for abnormal noises and smooth shifting.

TRANSFER ASSEMBLY

COMPONENTS

TR09J–01

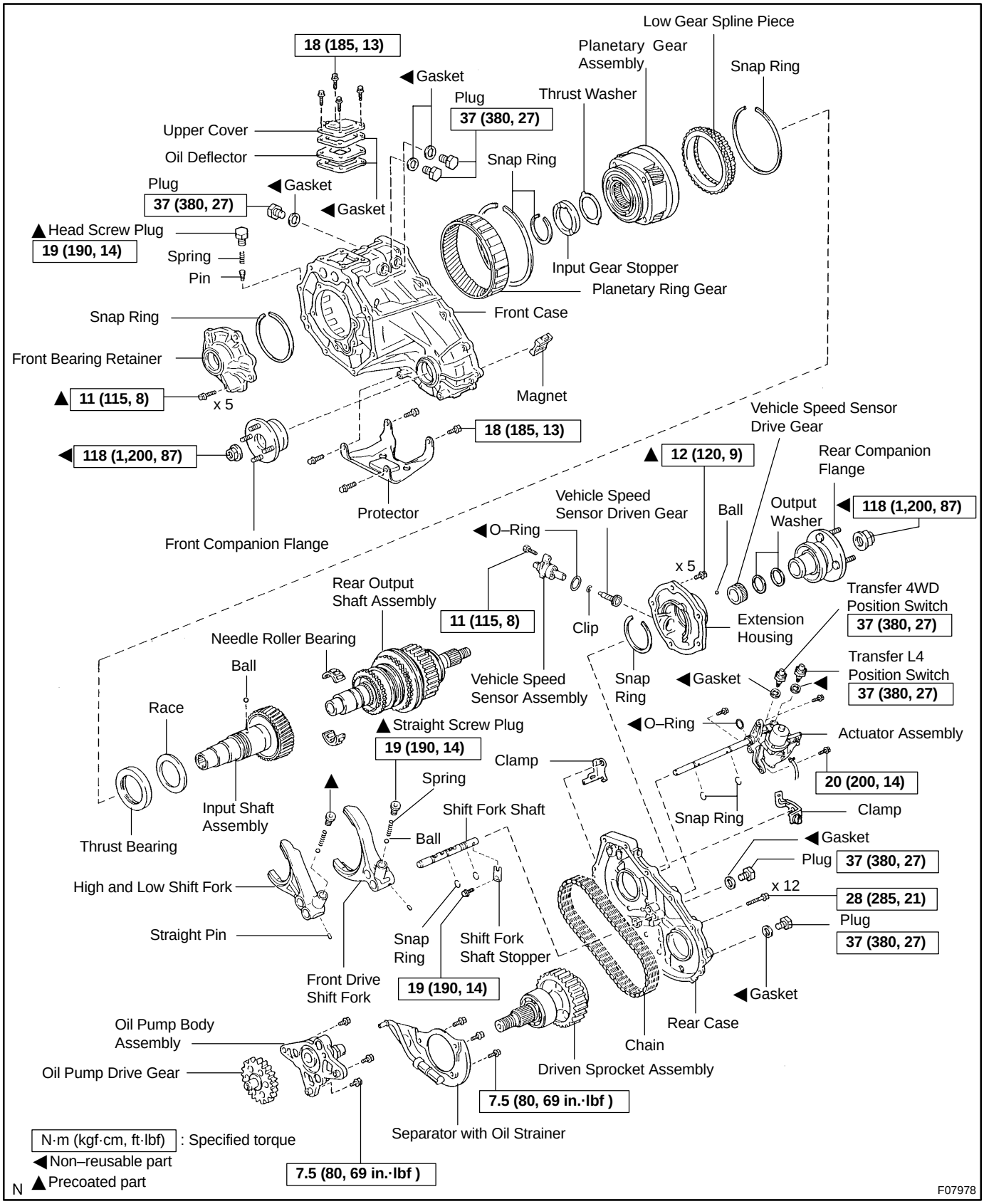

TR09K–01

DISASSEMBLY

1. REMOVE VEHICLE SPEED SENSOR ASSEMBLY

(a) Remove the bolt and vehicle speed sensor assembly.

(b) Remove the O–ring from the vehicle speed sensor assembly.

(c) Remove the clip and vehicle speed sensor driven gear from the vehicle speed sensor assembly.

2. REMOVE 3 PLUGS AND GASKETS FROM FRONT CASE

3. REMOVE PROTECTOR

Remove the 4 bolts and protector.

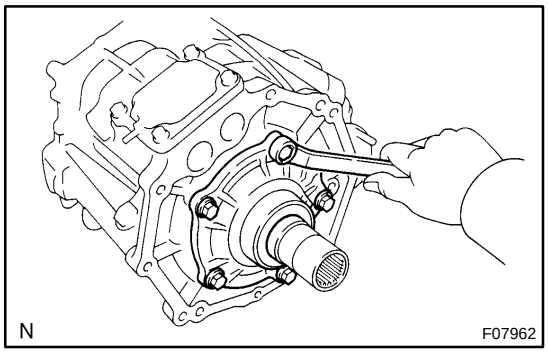

4. REMOVE FRONT BEARING RETAINER

(a) Remove the 5 bolts.

(b) Using a plastic hammer, tap the front bearing retainer and remove it.

5. REMOVE UPPER COVER AND OIL DEFLECTOR

Remove the 4 bolts, upper cover, 2 gaskets and oil deflector.

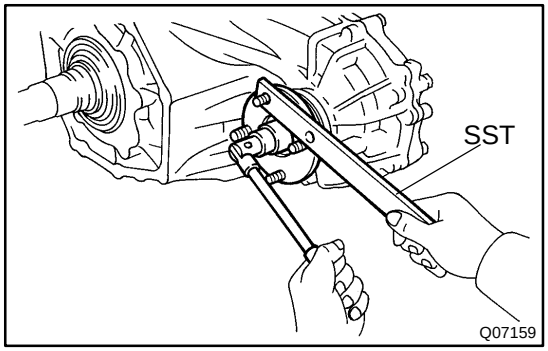

6. REMOVE FRONT COMPANION FLANGE

(a) Using a chisel and hammer, loosen the staked part of the front companion flange lock nut.

(b) Using SST, hold the front companion flange and remove the front companion flange lock nut.

SST 09330–00021

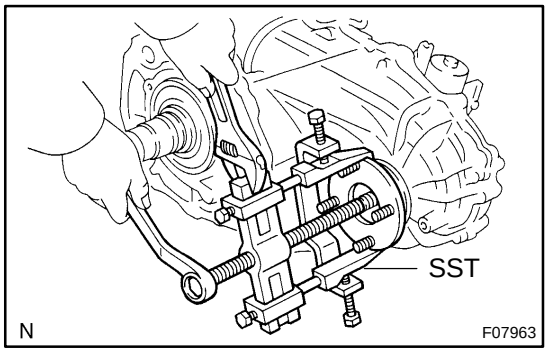

(c) Using SST, remove the front companion flange.

SST 09950–40011 (09951–04020, 09952–04010, 09953–04030, 09954–04010, 09955–04051, 09957–04010, 09958–04011)

7. REMOVE REAR COMPANION FLANGE

Remove the rear companion flange in the same way as the front companion flange.

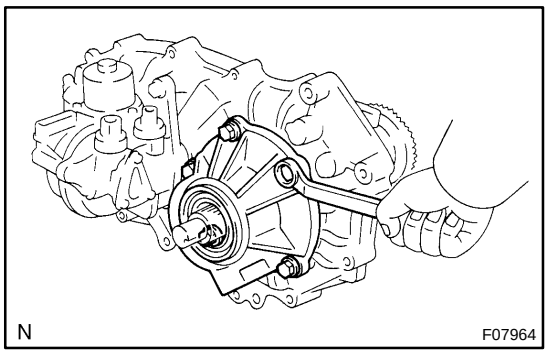

8. REMOVE EXTENSION HOUSING

(a) Remove the 5 bolts.

(b) Using a plastic hammer, tap the extension housing and remove it.

9. REMOVE VEHICLE SPEED SENSOR DRIVE GEAR

(a) Remove the 2 output washers and vehicle speed sensor drive gear.

(b) Using a magnetic finger, remove the ball from the rear output shaft.

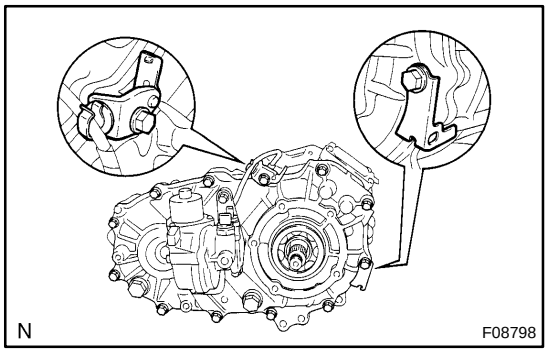

10. SEPARATE FRONT CASE AND REAR CASE

(a) Remove the 12 bolts and 2 clamps.

(b) Using a plastic hammer, tap the front case and rear case and separate them.

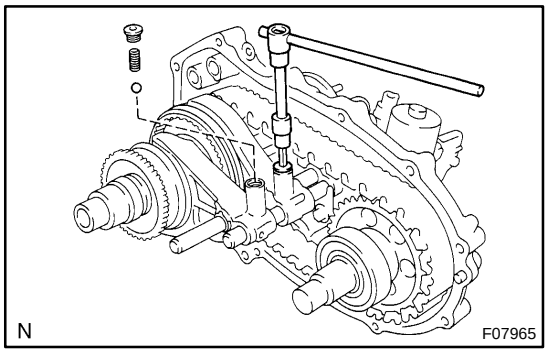

11. REMOVE SHIFT FORK SHAFT

(a) Using a hexagon wrench (6 mm), remove the 2 straight screw plugs, springs and balls from the front drive and high and low shift forks.

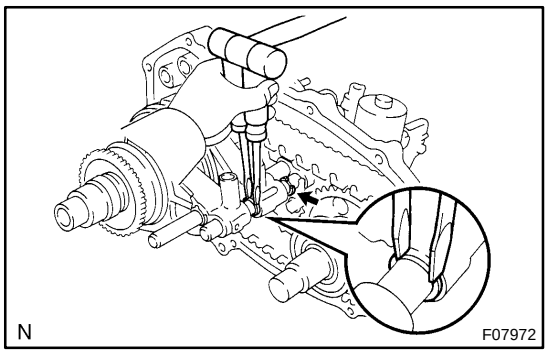

(b) Using 2 screwdrivers and a hammer, tap out the 2 snap rings from the shift fork shaft.

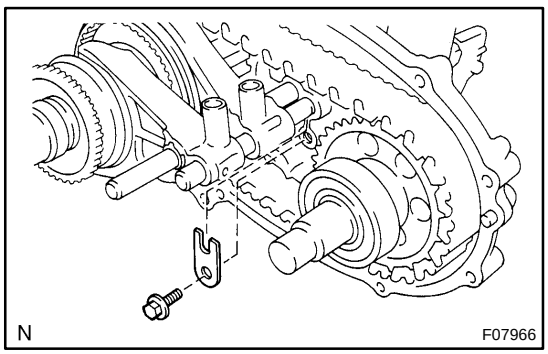

(c) Remove the bolt and shift fork shaft stopper.

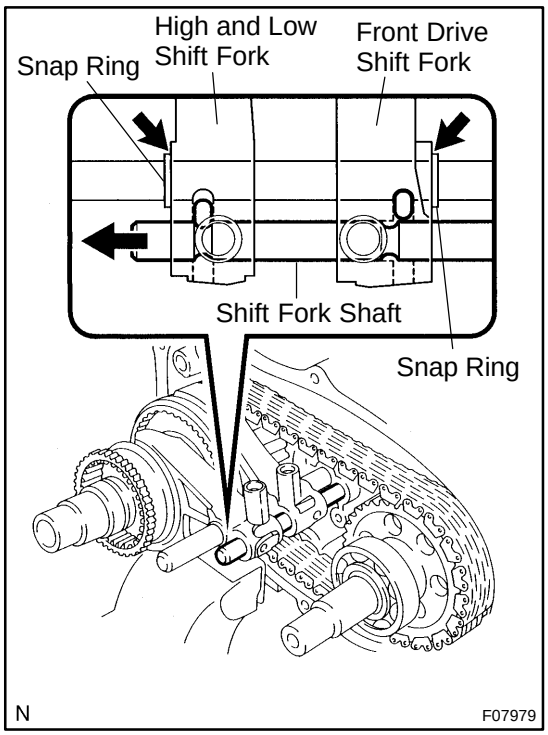

(d) To pull out the shift fork shaft, shift the front drive and high and low shift forks to the positions as shown in the illustration.

(e) Pull out the shift fork shaft.

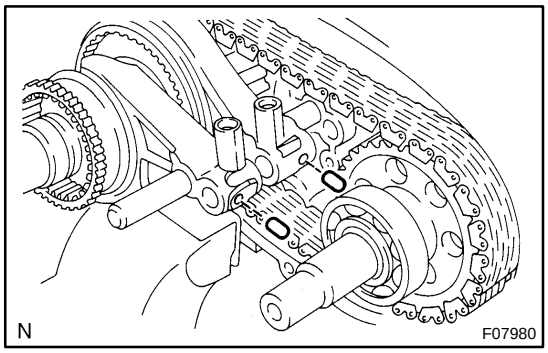

(f) Using a magnetic finger, remove the 2 straight pins from the front drive and high and low shift forks.

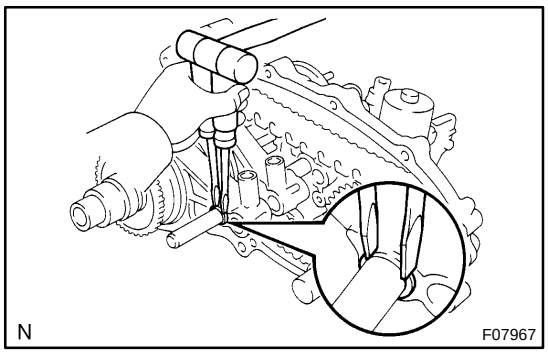

12. REMOVE REAR OUTPUT SHAFT ASSEMBLY, DRIVEN SPROCKET ASSEMBLY, CHAIN AND FRONT DRIVE AND HIGH AND LOW SHIFT FORKS

(a) Using 2 screwdrivers and a hammer, tap out the snap ring from the shift fork shaft of the actuator assembly.

HINT:

Remove only the snap ring on the front side of the shift fork shaft.

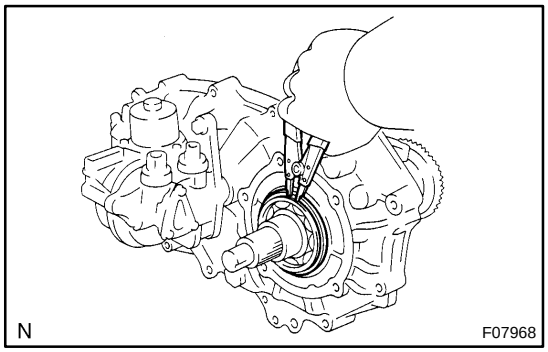

(b) Using a snap ring expander, remove the snap ring.

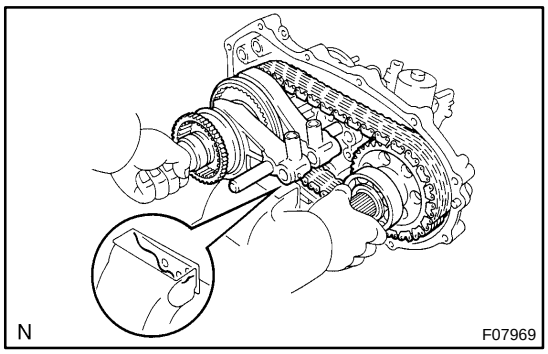

(c) Mount the rear case in a vise.
(d) Using a plastic hammer, carefully tap the rear case, and remove the rear output shaft assembly, driven sprocket assembly, chain and front drive and high and low shift forks with an assembly.
(e) Remove the driven sprocket assembly, chain and front drive and high and low shift forks from the rear output shaft assembly.

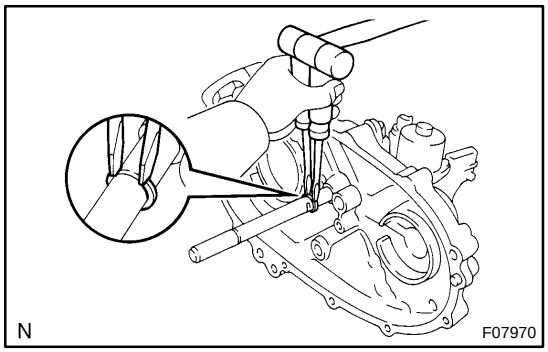

13. REMOVE ACTUATOR ASSEMBLY

(a) Using 2 screwdrivers and a hammer, remove the snap ring.
(b) Remove the 3 bolts and actuator assembly.

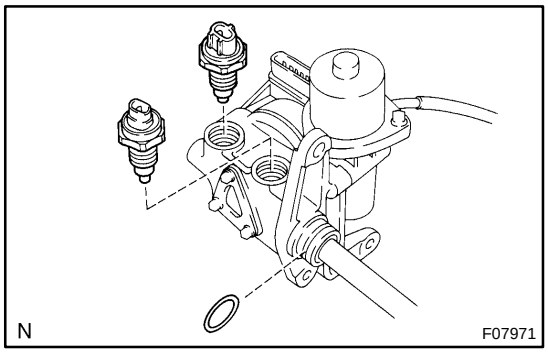

(c) Remove the O–ring, transfer 4WD position switch and transfer L4 position switch and 2 gaskets from the actuator assembly.

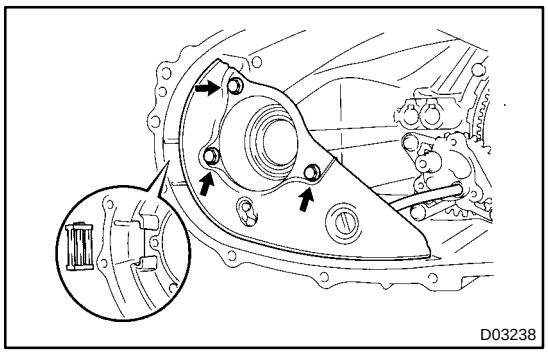

14. REMOVE SEPARATOR WITH OIL STRAINER AND MAGNET

Remove the 3 bolts, separator with the oil strainer and magnet.

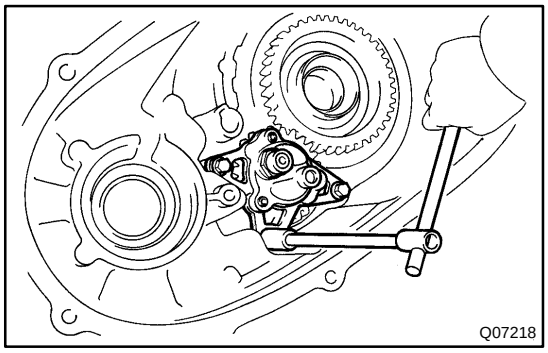

15. REMOVE OIL PUMP BODY ASSEMBLY

Remove the 3 bolts and oil pump body assembly.

16. REMOVE OIL PUMP DRIVE GEAR

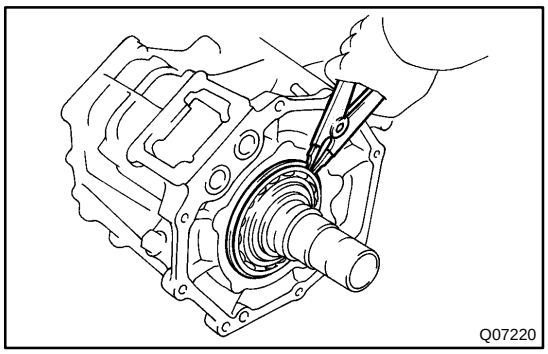

17. REMOVE PLANETARY GEAR ASSEMBLY WITH INPUT SHAFT ASSEMBLY

(a) Using a snap ring expander, remove the snap ring.

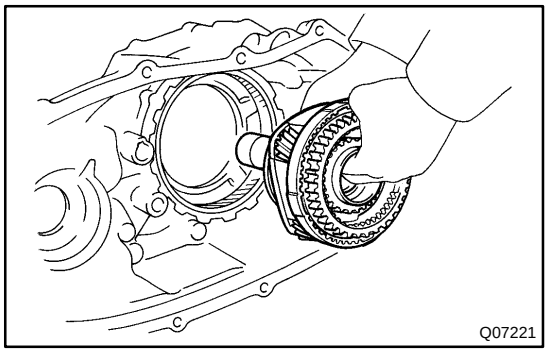

(b) Pull out the planetary gear assembly with the input shaft assembly.

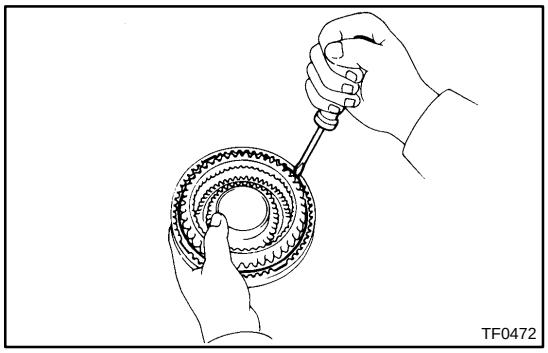

18. REMOVE LOW GEAR SPLINE PIECE

(a) Using a screwdriver, remove the snap ring.

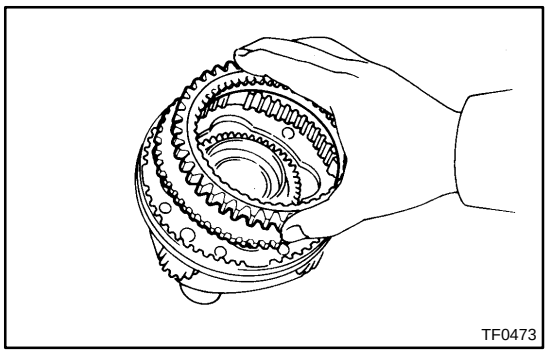

(b) Remove the low gear spline piece.

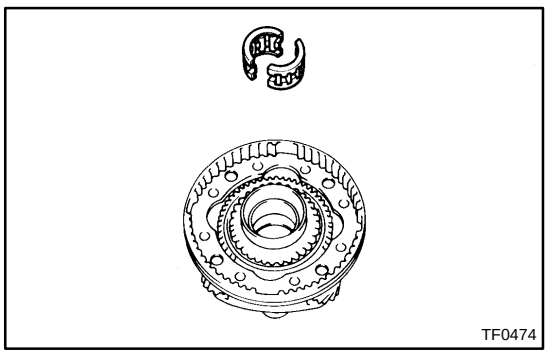

19. REMOVE NEEDLE ROLLER BEARING FROM INPUT SHAFT ASSEMBLY

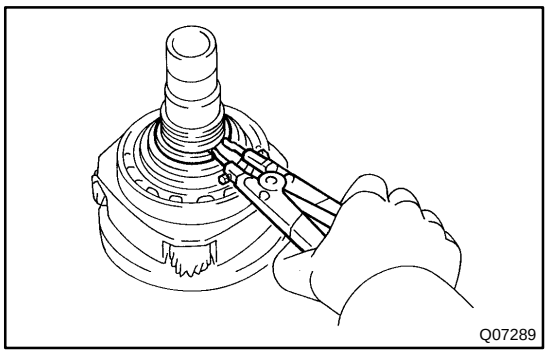

20. REMOVE INPUT GEAR STOPPER AND THRUST WASHER

(a) Using a snap ring expander, remove the snap ring.

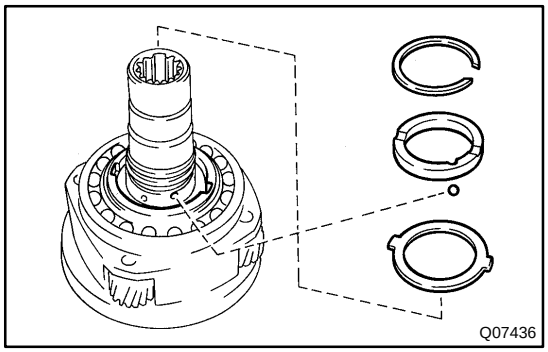

(b) Remove the input gear stopper, ball and thrust washer.

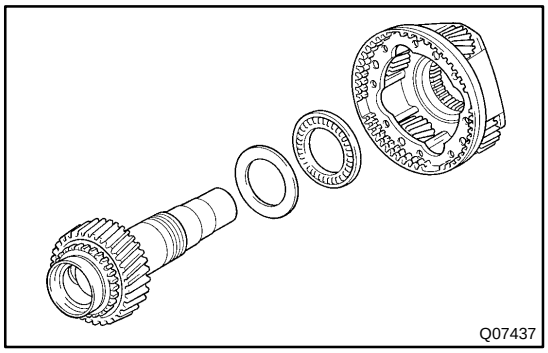

21. REMOVE INPUT SHAFT ASSEMBLY, THRUST BEARING AND RACE

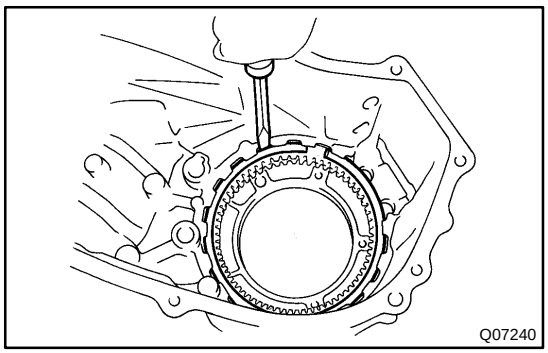

22. REMOVE PLANETARY RING GEAR

(a) Using a screwdriver, remove the snap ring.

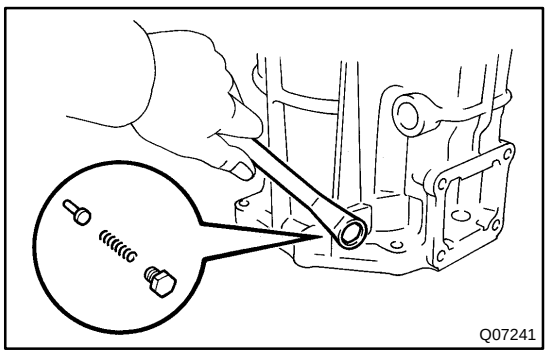

(b) Remove the head screw plug, spring and pin.

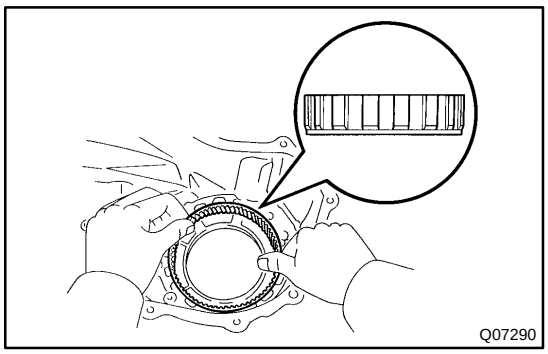

(c) Remove the planetary ring gear.

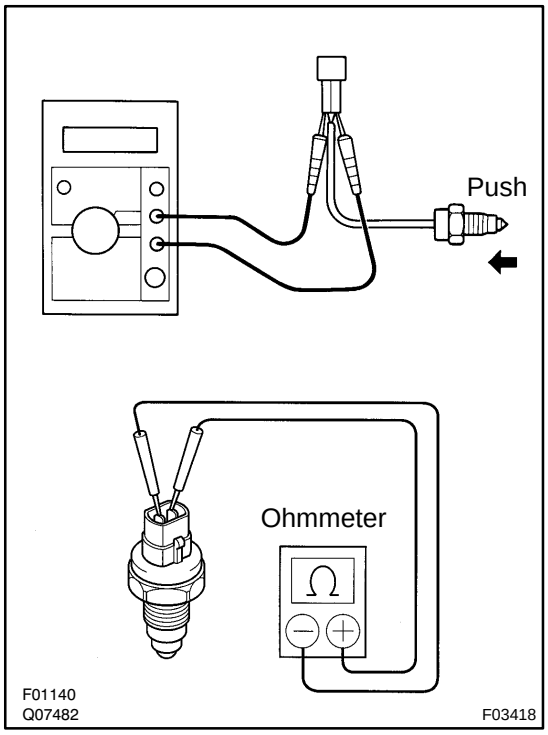

23. INSPECT SWITCH

Check that continuity exists between terminals as shown.

Switch Position	Specified Condition
Push	Continuity
Free	No continuity

If operation is not as specified, replace the switch.

TR09L–01

REASSEMBLY

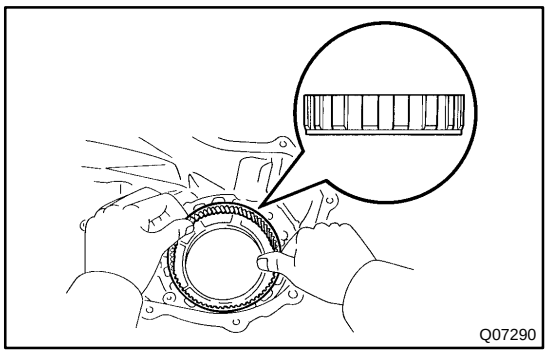

HINT:

Coat all of the sliding and rotating surface with gear oil before reassembly.

1. INSTALL PLANETARY RING GEAR

(a) Install the planetary ring gear.

NOTICE:

Make sure that the planetary ring gear is installed facing in the correct direction.

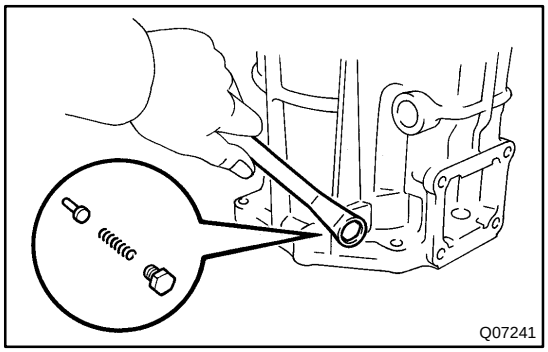

(b) Install the pin and spring.

(c) Apply sealant to the head screw plug threads.

Sealant:

Part No. 08833–00080, THREE BOND 1344, LOCTITE 242 or equivalent

(d) Install the head screw plug.

Torque: 19 N·m (190 kgf·cm, 14 ft·lbf)

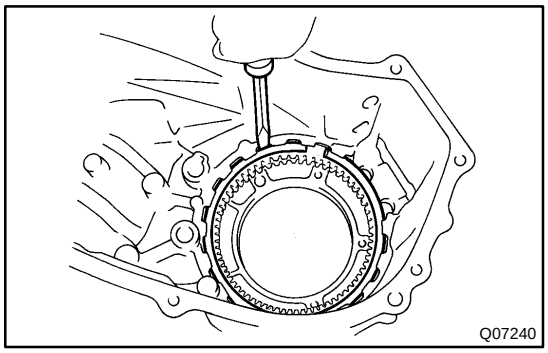

(e) Using a screwdriver, install the snap ring.

NOTICE:

Make sure the end gap of the snap ring is not aligned with the upper side of the case.

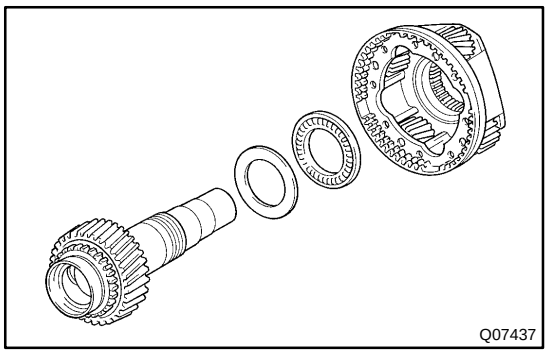

2. INSTALL INPUT SHAFT ASSEMBLY, THRUST BEARING AND RACE

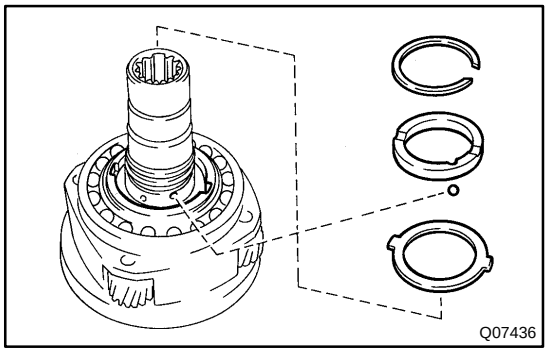

3. INSTALL THRUST WASHER AND INPUT GEAR STOPPER

(a) Install the thrust washer, ball and input gear stopper.

HINT:

Apply gear oil to the input gear stopper and thrust washer.

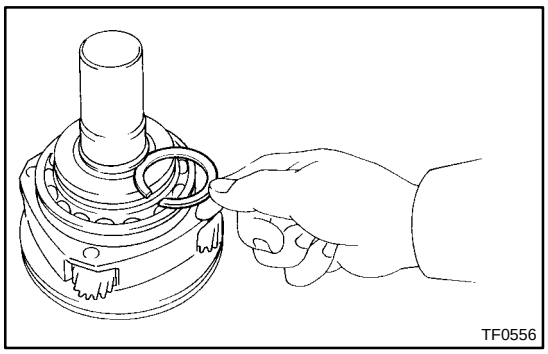
TF0556

(b) Select a snap ring that allows 0.05 – 0.15 mm (0.0020 – 0.0059 in.) axial play.

Mark	Thickness mm (in.)
A	2.10 – 2.15 (0.0827 – 0.0846)
B	2.15 – 2.20 (0.0846 – 0.0866)
C	2.20 – 2.25 (0.0866 – 0.0886)
D	2.25 – 2.30 (0.0886 – 0.0906)
E	2.30 – 2.35 (0.0906 – 0.0925)
F	2.35 – 2.40 (0.0925 – 0.0945)
G	2.40 – 2.45 (0.0945 – 0.0965)
H	2.45 – 2.50 (0.0965 – 0.0984)
J	2.50 – 2.55 (0.0984 – 0.1004)
K	2.55 – 2.60 (0.1004 – 0.1024)
L	2.60 – 2.65 (0.1024 – 0.1043)
M	2.65 – 2.70 (0.1043 – 0.1063)
N	2.70 – 2.75 (0.1063 – 0.1083)
P	2.75 – 2.80 (0.1083 – 0.1102)
Q	2.80 – 2.85 (0.1102 – 0.1122)
R	2.85 – 2.90 (0.1122 – 0.1142)
S	2.90 – 2.95 (0.1142 – 0.1161)
T	2.95 – 3.00 (0.1161 – 0.1181)
U	3.00 – 3.05 (0.1181 – 0.1201)

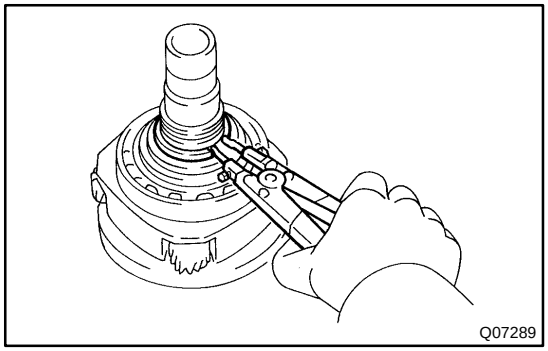
Q07289

(c) Using a snap ring expander, install a snap ring.

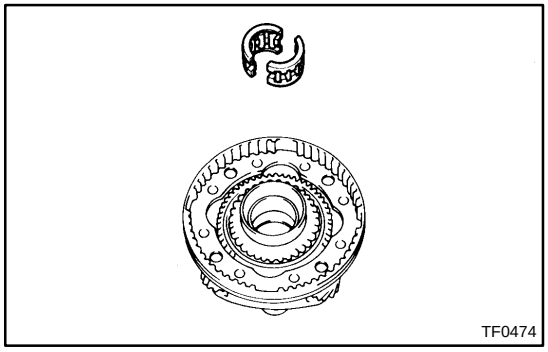
TF0474

4. INSTALL NEEDLE ROLLER BEARING TO INPUT SHAFT ASSEMBLY

HINT:

Apply gear oil to the needle roller bearing.

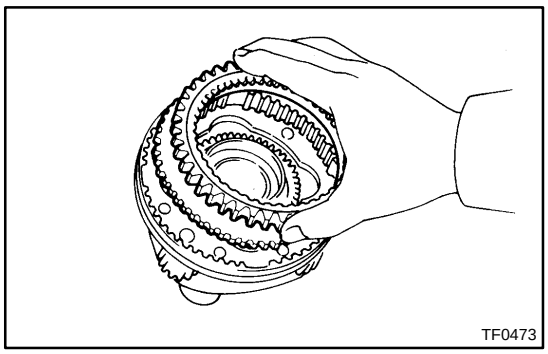

5. INSTALL LOW GEAR SPLINE PIECE

(a) Install the low gear spline piece.

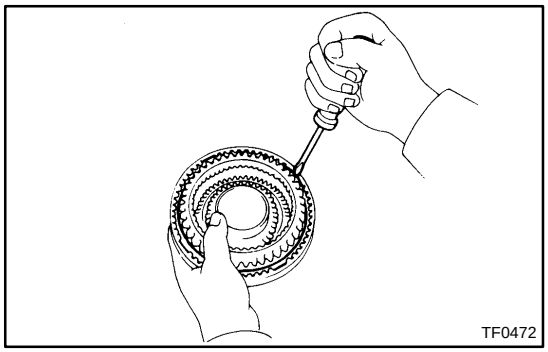

(b) Using a screwdriver, install the snap ring.

NOTICE:

Make sure the end gap of the snap ring is not aligned with the cutout portion of the planetary carrier.

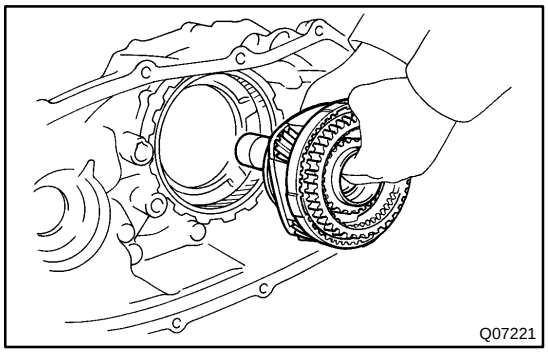

6. INSTALL PLANETARY GEAR ASSEMBLY WITH INPUT SHAFT ASSEMBLY

(a) Install the planetary gear assembly with the input shaft assembly.

HINT:

If necessary, heat the front case to about 50 – 80 °C (122 – 176 °F).

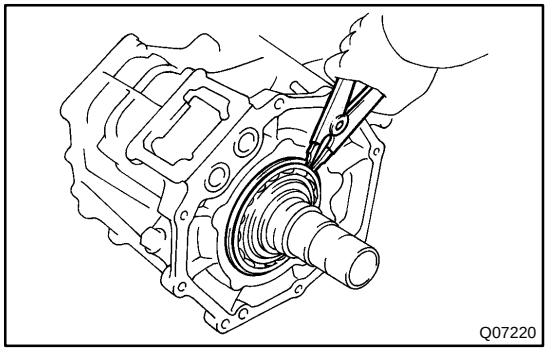

(b) Using a snap ring expander, install the snap ring.

HINT:

Check that the planetary gear and input shaft assembly turn lightly.

7. INSTALL OIL PUMP DRIVE GEAR

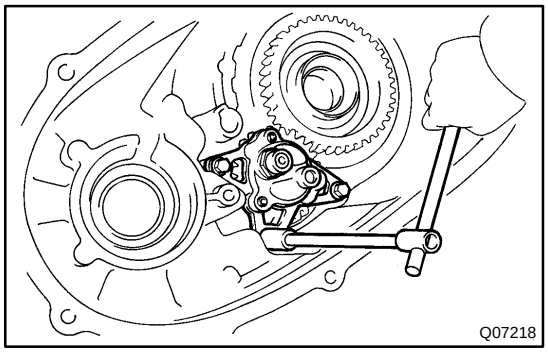

8. INSTALL OIL PUMP BODY ASSEMBLY

Install the oil pump body assembly with the 3 bolts.

Torque: 7.5 N·m (80 kgf·cm, 69 in.·lbf)

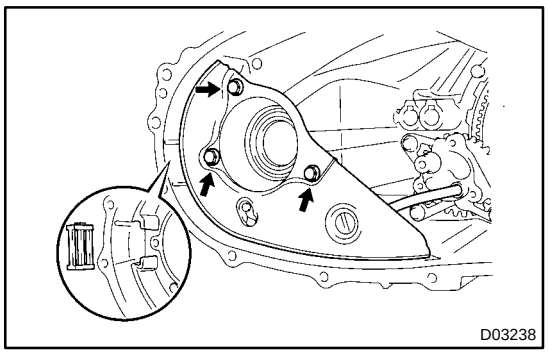

9. INSTALL MAGNET AND SEPARATOR WITH OIL STRAINER

(a) Install the magnet to the front case.

(b) Install the separator with oil strainer with the 3 bolts.
Torque: 7.5 N·m (80 kgf·cm, 69 in.·lbf)

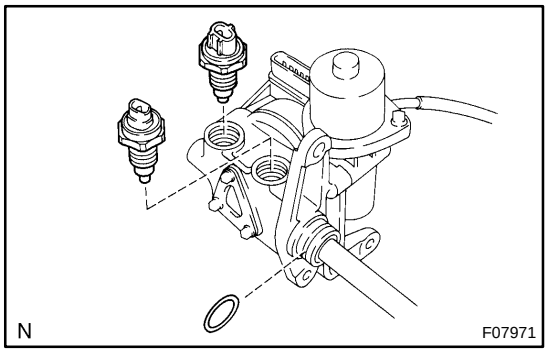

10. INSTALL ACTUATOR ASSEMBLY

(a) Install a new O–ring, 2 new gaskets, transfer 4WD position switch and transfer L4 position switch to the actuator assembly.
Torque: 37 N·m (380 kgf·cm, 27 ft·lbf)

HINT:
Coat a new O–ring with gear oil.

(b) Install the actuator assembly with the 3 bolts.
Torque: 20 N·m (200 kgf·cm, 14 ft·lbf)

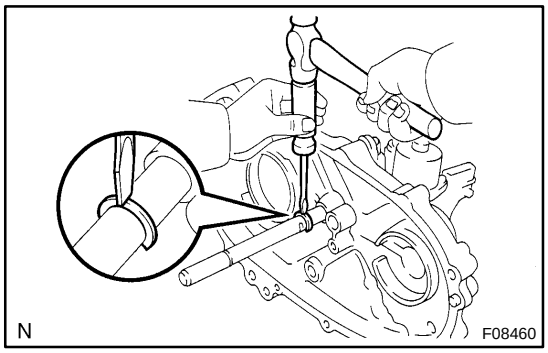

(c) Using a screwdriver and hammer, drive in the snap ring to the shift fork shaft of the actuator assembly.

HINT:
Install only the snap ring on the rear side of the shift fork shaft.

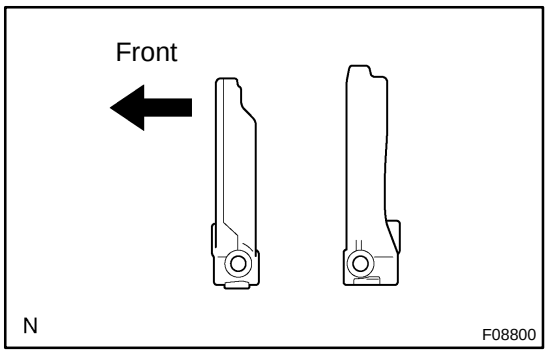

11. INSTALL REAR OUTPUT SHAFT ASSEMBLY, DRIVEN SPROCKET ASSEMBLY, CHAIN AND FRONT DRIVE AND HIGH AND LOW SHIFT FORKS

(a) Install the driven sprocket assembly, chain and front drive and high and low shift forks to the rear output shaft assembly.

NOTICE:
Make sure that the front drive and high and low shift forks are installed facing in the correct direction.

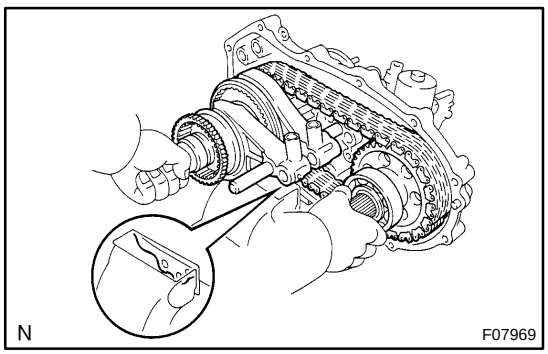

(b) Mount the rear case in a vise.

(c) Install the rear output shaft assembly, driven sprocket assembly, chain and front drive and high and low shift forks to the rear case with an assembly.

NOTICE:
Do not let the clutch sleeve and shifting key drop.

HINT:
If necessary, heat the rear case to about 50 – 80 °C (122 – 176 °F).

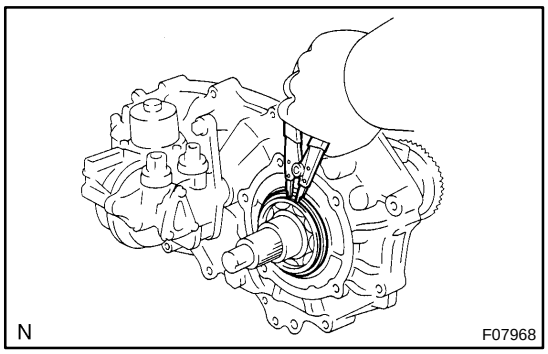

(d) Using a snap ring expander, install the snap ring.

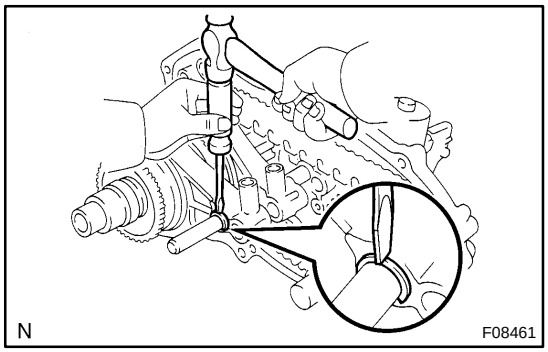

(e) Using a screwdriver and hammer, drive in the snap ring to the shift fork shaft of the actuator assembly.

HINT:

Check that the rear output shaft assembly and driven sprocket assembly turn lightly.

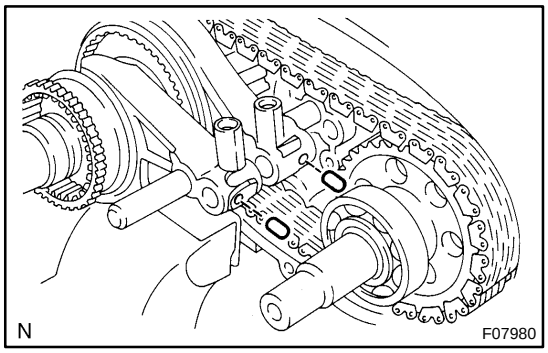

12. INSTALL SHIFT FORK SHAFT

(a) Using a magnetic finger, install the 2 straight pins to the front drive and high and low shift forks.

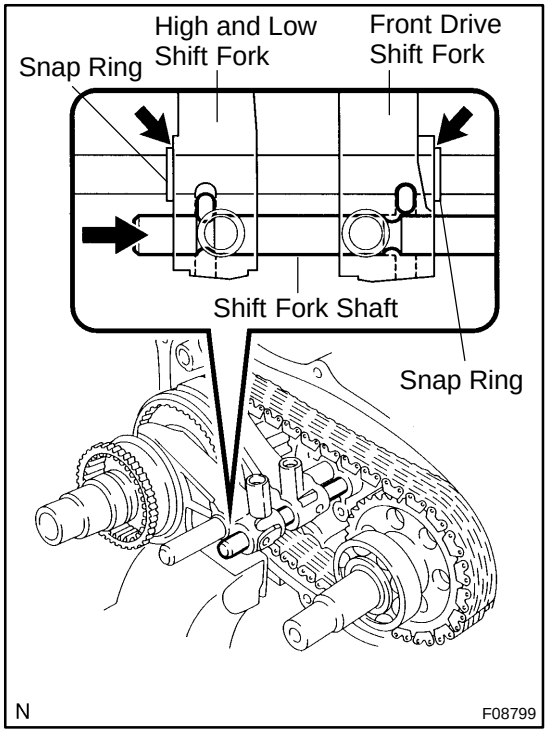

(b) To push into the shift fork shaft, shift the front drive and high and low shift forks to the positions as shown in the illustration.

(c) Push into the shift fork shaft.

NOTICE:

Make sure that the shift fork shaft is installed facing in the correct direction.

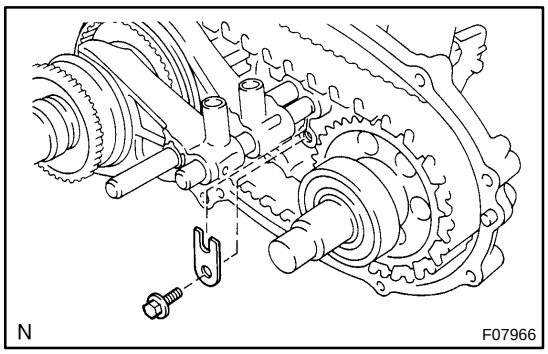

(d) Install the shift fork shaft stopper with the bolt.
Torque: 19 N·m (190 kgf·cm, 14 ft·lbf)

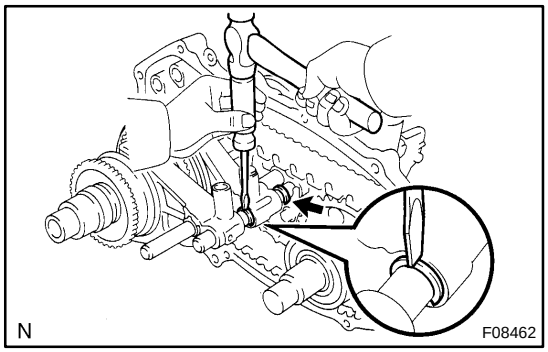

(e) Using a screwdriver and hammer, drive in the 2 snap rings to the shift fork shaft.

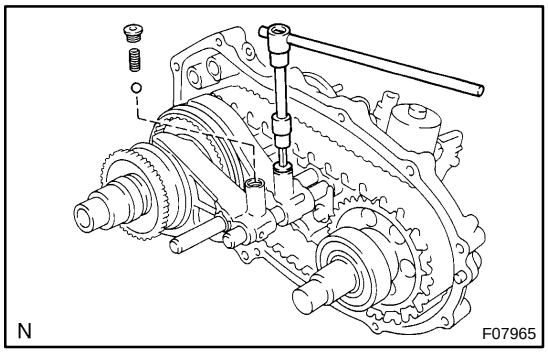

(f) Install the 2 balls and springs to the front drive and high and low shift forks.
(g) Apply sealant to the straight screw plug threads.
Sealant:
Part No. 08833–00080, THREE BOND 1344, LOCTITE 242 or equivalent
(h) Using a hexagon wrench (6 mm), install the 2 straight screw plugs to the front drive and high and low shift forks.
Torque: 19 N·m (190 kgf·cm, 14 ft·lbf)

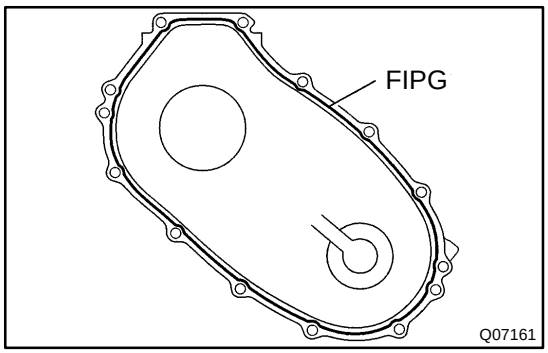

13. REASSEMBLE FRONT AND REAR CASE
HINT:
Remove any FIPG material and be careful not to drop oil on the contacting surfaces of the rear case.
(a) Apply FIPG to the rear case as shown in the illustration.
FIPG:
Part No. 08826–00090,
THREE BOND 1281 or equivalent

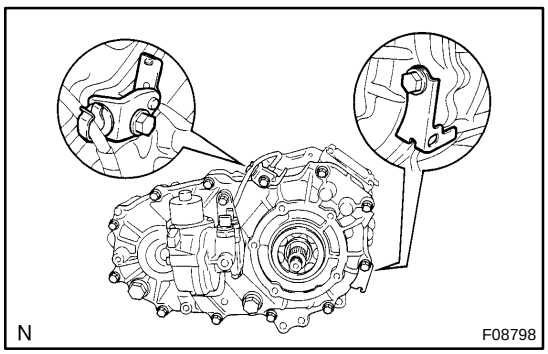

(b) Install the 2 clamps and reassemble the front and rear case with the 12 bolts.
Torque: 28 N·m (285 kgf·cm, 21 ft·lbf)

14. INSTALL VEHICLE SPEED SENSOR DRIVE GEAR
(a) Install the ball to the rear output shaft.
(b) Install the vehicle speed sensor drive gear and 2 output washers.

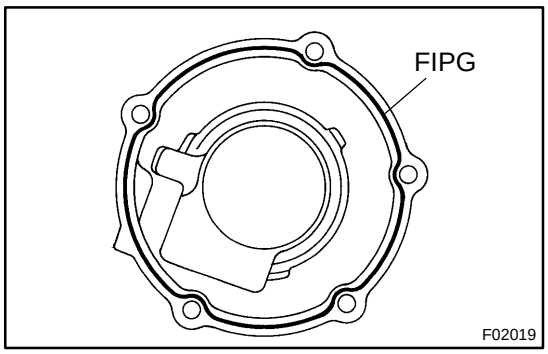

15. INSTALL EXTENSION HOUSING

HINT:

Remove any FIPG material and be careful not to drop oil on the contacting surfaces of the extension housing.

(a) Apply FIPG to the extension housing as shown in the illustration.

FIPG:

Part No. 08826–00090,

THREE BOND 1281 or equivalent

(b) Apply sealant to the bolt threads.

Sealant:

Part No. 08833–00080, THREE BOND 1344, LOCTITE 242 or equivalent

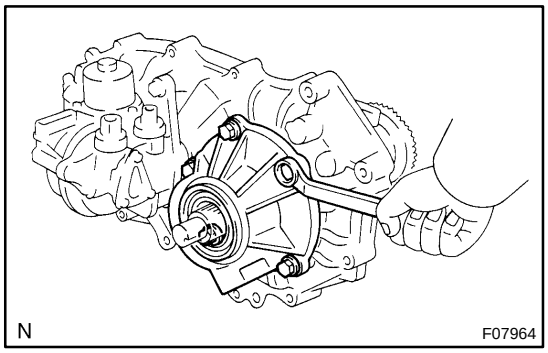

(c) Install the extension housing with the 5 bolts.

Torque: 12 N·m (120 kgf·cm, 9 ft·lbf)

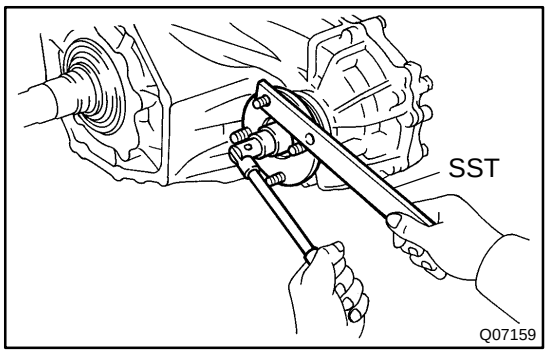

16. INSTALL FRONT COMPANION FLANGE

(a) Install the front companion flange to the input shaft.

(b) Using SST, hold the front companion flange, and install a new front companion flange lock nut.

SST 09330–00021

Torque: 118 N·m (1,200 kgf·cm, 87 ft·lbf)

(c) Stake the front companion flange lock nut.

17. INSTALL REAR COMPANION FLANGE

Install the rear companion flange in the same way as the front companion flange.

18. INSTALL OIL DEFLECTOR AND UPPER COVER

Install 2 new gaskets, oil deflector and upper cover with the 4 bolts.

Torque: 18 N·m (185 kgf·cm, 13 ft·lbf)

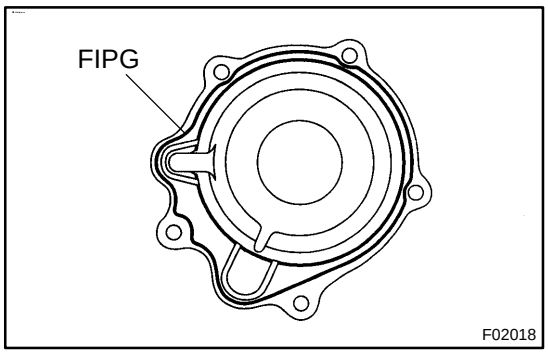

19. INSTALL FRONT BEARING RETAINER

HINT:

Remove any FIPG material and be careful not to drop oil on the contacting surfaces of the front bearing retainer.

(a) Apply FIPG to the front bearing retainer as shown in the illustration.
FIPG:
Part No. 08826–00090,
THREE BOND 1281 or equivalent

(b) Apply sealant to the bolt threads.
Sealant:
Part No. 08833–00080, THREE BOND 1344, LOCTITE 242 or equivalent

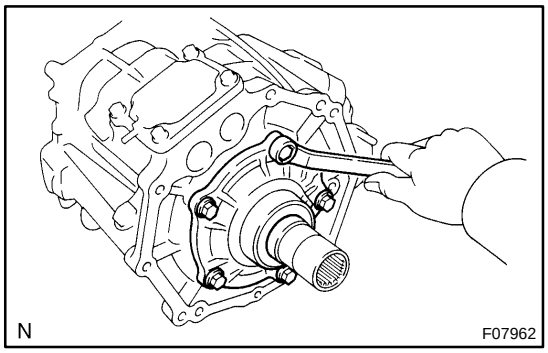

(c) Install the front bearing retainer with the 5 bolts.
Torque: 11 N·m (115 kgf·cm, 8 ft·lbf)

20. INSTALL PROTECTOR

Install the protector with the 4 bolts.
Torque: 18 N·m (185 kgf·cm, 13 ft·lbf)

21. INSTALL 3 PLUGS AND NEW GASKETS TO FRONT CASE
Torque: 37 N·m (380 kgf·cm, 27 ft·lbf)

22. INSTALL VEHICLE SPEED SENSOR ASSEMBLY

(a) Install the vehicle speed sensor driven gear to the vehicle speed sensor assembly with the clip.

(b) Install a new O–ring to the vehicle speed sensor assembly.

HINT:

Coat a new O–ring with gear oil.

(c) Install the vehicle speed sensor assembly with the bolt.
Torque: 11 N·m (115 kgf·cm, 8 ft·lbf)

OIL PUMP BODY

COMPONENTS

TR00D–06

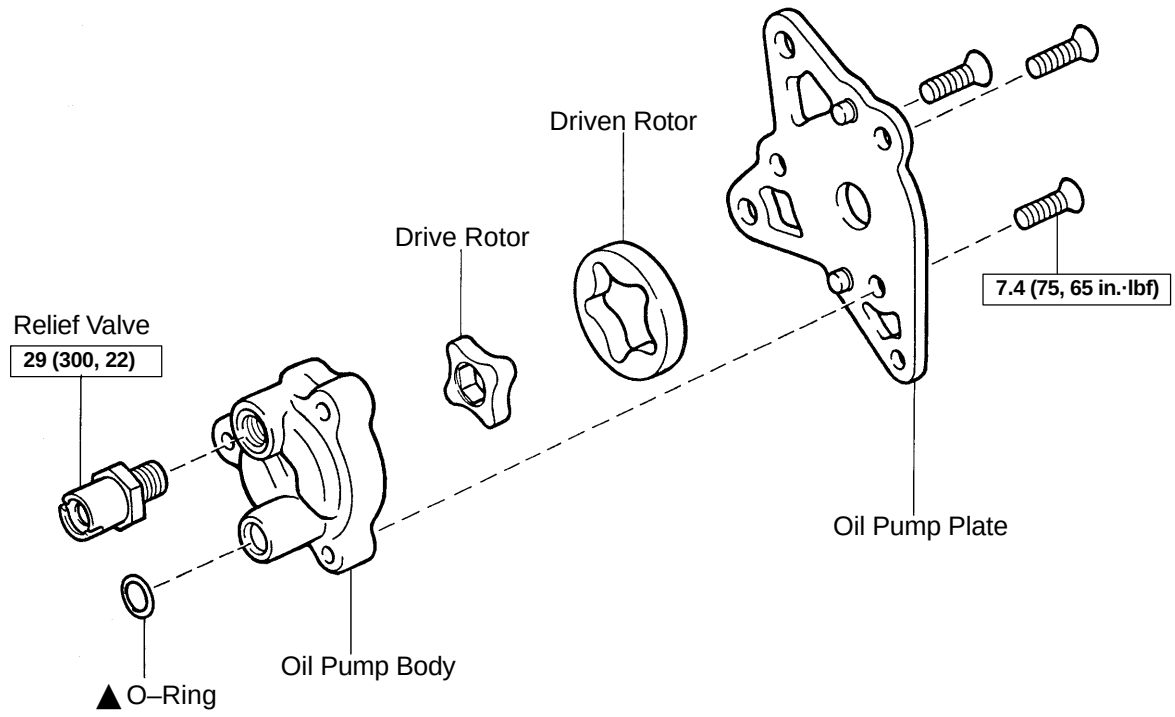

N·m (kgf·cm, ft·lbf) : Specified torque

▲ Non–reusable part

Q07245

TR01M–05

INSPECTION

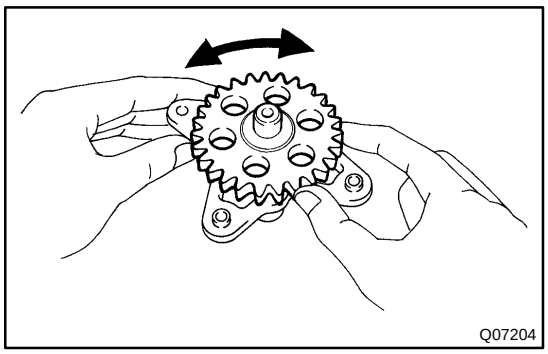
Q07204

1. CHECK OIL PUMP OPERATION

Install the oil pump drive gear to the drive rotor, check that the drive rotor turns smoothly.

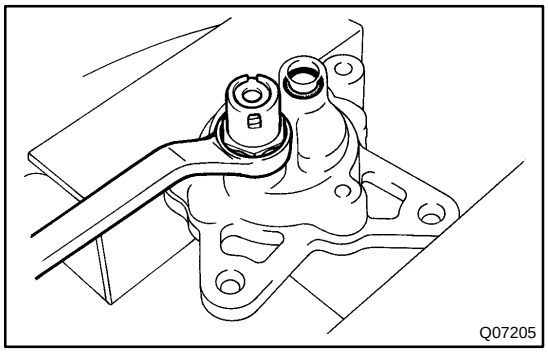
Q07205

2. INSPECT ROTOR CLEARANCE

(a) Remove the relief valve and O–ring.
  (1) Mount the oil pump plate in a vise.
  (2) Remove the relief valve and O–ring from the oil pump body.
  Torque: 29 N·m (300 kgf·cm, 22 ft·lbf)

HINT:
At the time of reassembly, coat a new O–ring with gear oil and install it to the oil pump body.

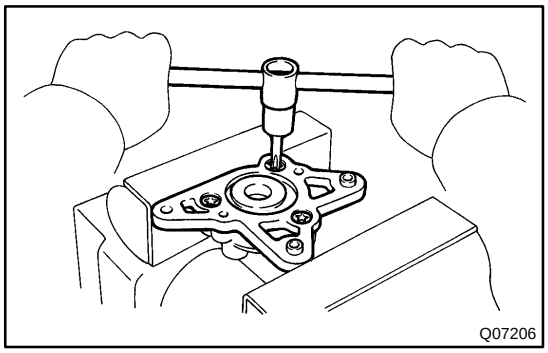
Q07206

(b) Remove the oil pump plate.
  (1) Using a torx socket wrench, unscrew the 3 torx screws. (Torx socket wrench T30 09042–00010)
  Torque: 7.4 N·m (75 kgf·cm, 65 in.·lbf)
  (2) Remove the oil pump plate.

(c) Remove the drive rotor and driven rotor.

HINT:
At the time of reassembly, apply gear oil to the both rotors.

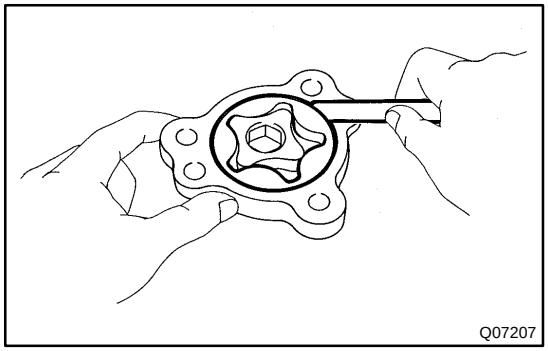
Q07207

(d) Inspect the driven rotor body clearance.
  (1) Push the driven rotor to one side of the body.
  (2) Using a feeler gauge, measure the clearance.
  Standard clearance:
  0.09 – 0.16 mm (0.0035 – 0.0063 in.)
  Maximum clearance:
  0.16 mm (0.0063 in.)

If the clearance exceeds the maximum, replace the drive rotor, driven rotor or oil pump body.

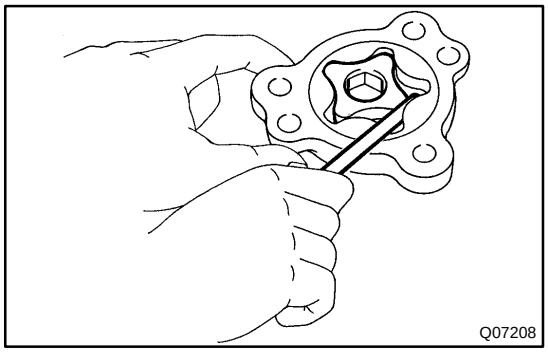
Q07208

(e) Inspect the both rotor tips clearance.
  Using a feeler gauge, measure the clearance between both rotor tips.
  Standard clearance:
  0.05 – 0.15 mm (0.0020 – 0.0059 in.)
  Maximum clearance:
  0.15 mm (0.0059 in.)

If the clearance exceeds the maximum, replace the drive rotor, driven rotor or oil pump body.

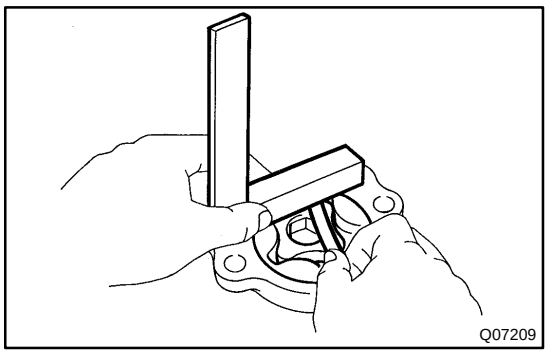

(f) Inspect the both rotor sides clearance.
Using a steel square and feeler gauge, measure the clearance between the rotors and straight edge.
Standard clearance:
0.03 – 0.10 mm (0.0012 – 0.0039 in.)
Maximum clearance:
0.10 mm (0.0039 in.)

If the clearance exceeds the maximum, replace the drive rotor, driven rotor or oil pump body.

3. ASSEMBLE REMOVED PARTS

HINT:

Reassembly is in the reverse order of disassembly.

DRIVEN SPROCKET

COMPONENTS

TR00F–06

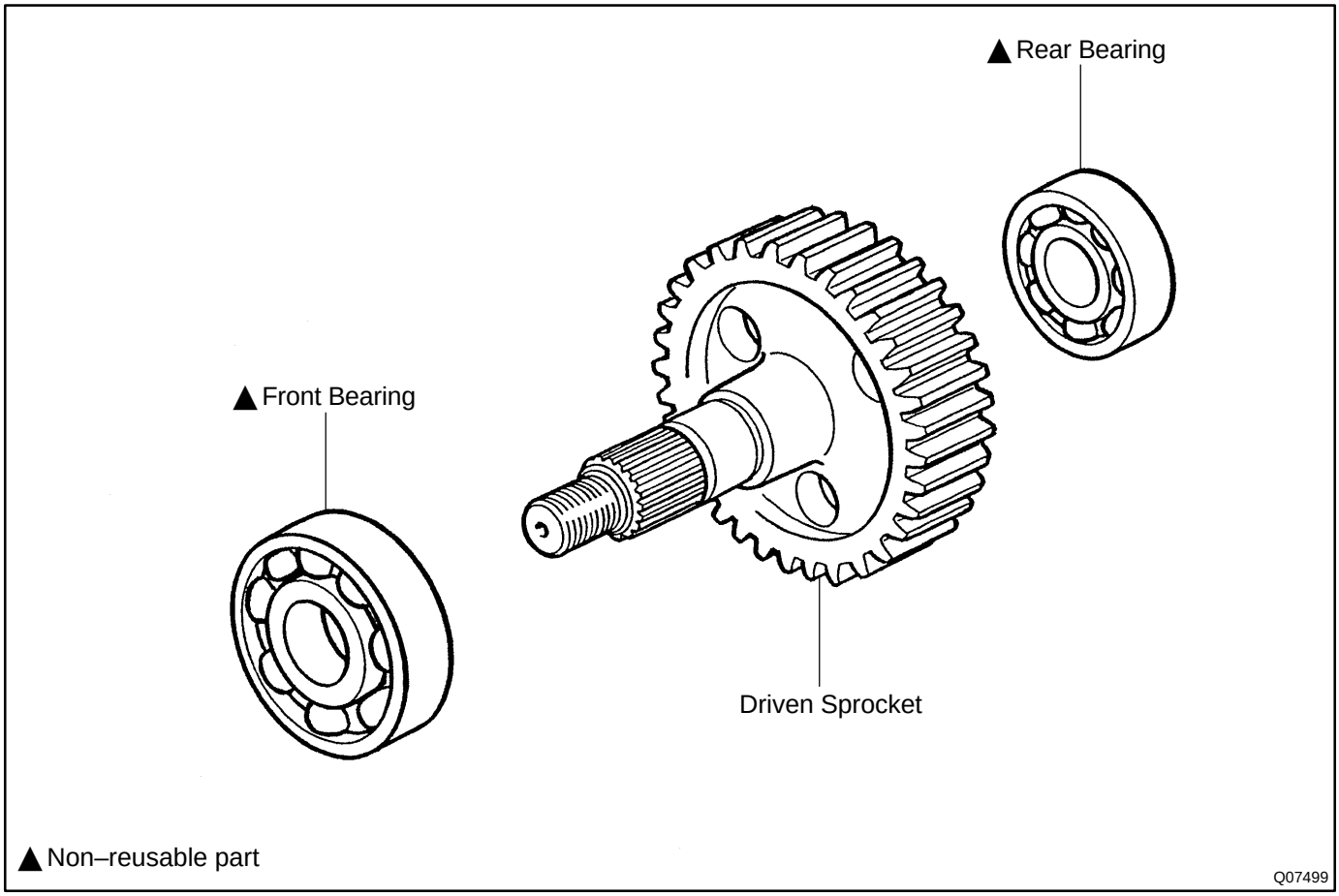

TR00G–06

REPLACEMENT

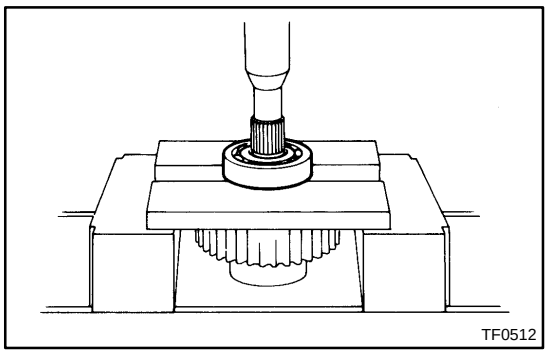

1. REMOVE FRONT BEARING

Using a press, remove the front bearing.

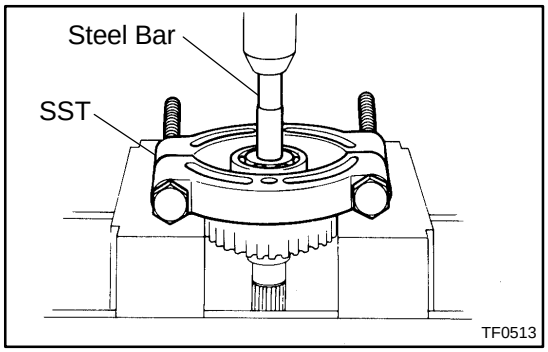

2. REMOVE REAR BEARING

Using SST, a press and steel bar, remove the rear bearing.

SST 09555–55010

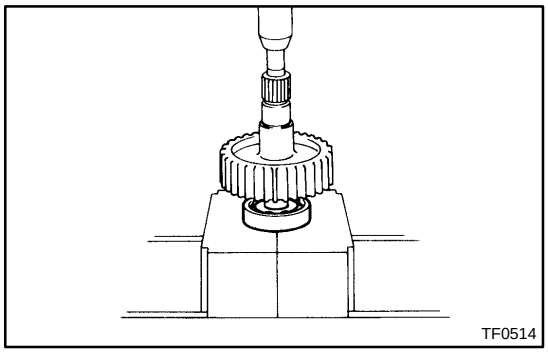

3. INSTALL REAR BEARING

Using a press, install a new rear bearing.

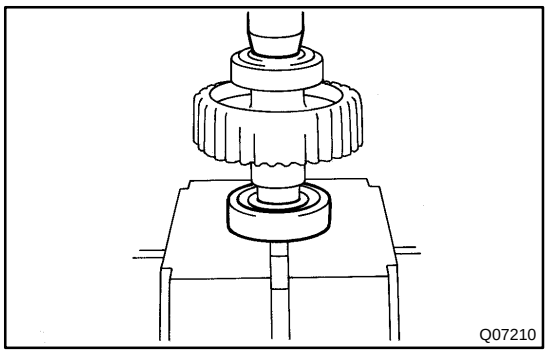

4. INSTALL FRONT BEARING

Using a press, install a new front bearing.

REAR OUTPUT SHAFT

COMPONENTS

TR09M–01

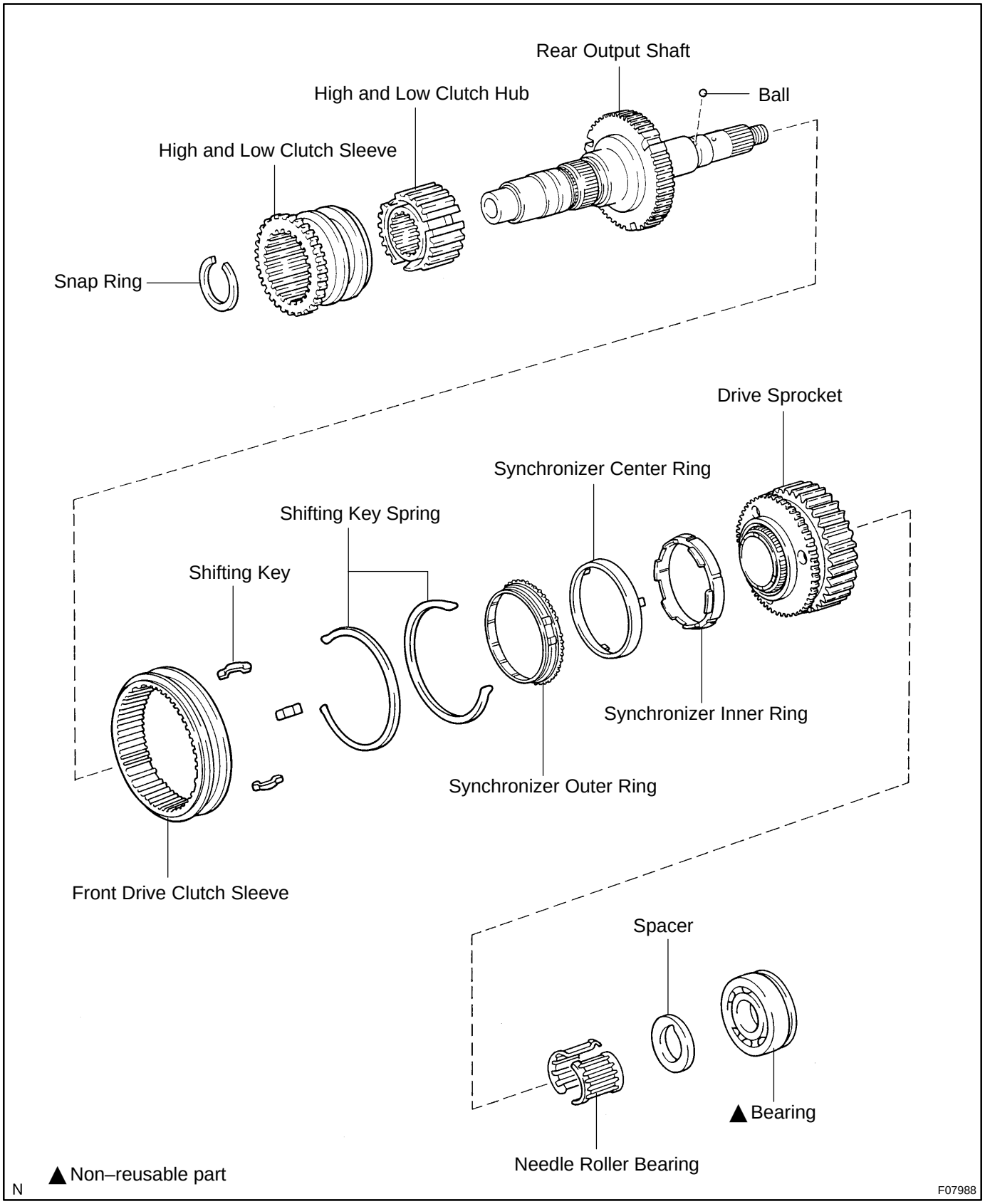

TR09N–01

DISASSEMBLY

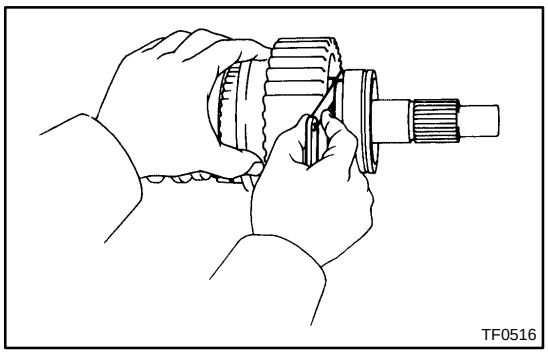
TF0516

1. INSPECT DRIVE SPROCKET THRUST CLEARANCE

Using a feeler gauge, measure the drive sprocket thrust clearance.

Standard clearance:
0.10 – 0.25 mm (0.0039 – 0.0098 in.)
Maximum clearance: 0.25 mm (0.0098 in.)

If the clearance exceeds the maximum, replace the drive sprocket.

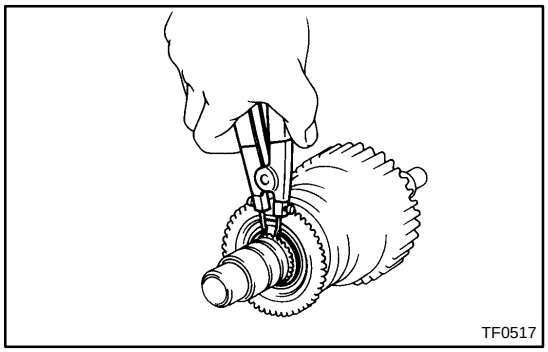
TF0517

2. REMOVE HIGH AND LOW CLUTCH SLEEVE ASSEMBLY

(a) Remove the clutch sleeve.
(b) Using a snap ring expander, remove the snap ring.

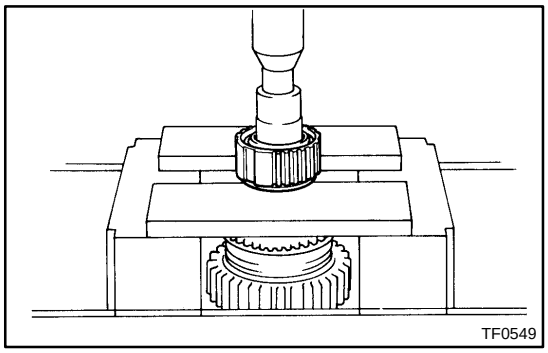
TF0549

(c) Using a press, remove the clutch hub.

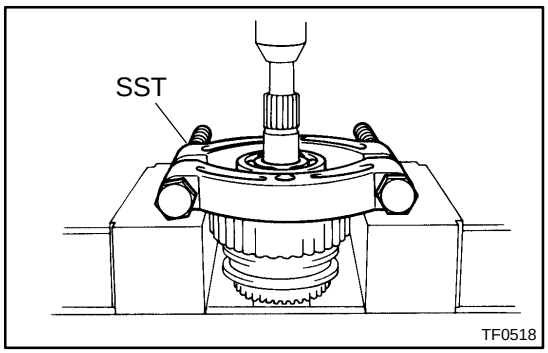

TF0518

3. REMOVE BEARING, SPACER, DRIVE SPROCKET, SYNCHRONIZER OUTER, CENTER AND INNER RINGS AND FRONT DRIVE CLUTCH SLEEVE ASSEMBLY

(a) Using SST and a press, remove the bearing.
SST 09555–55010

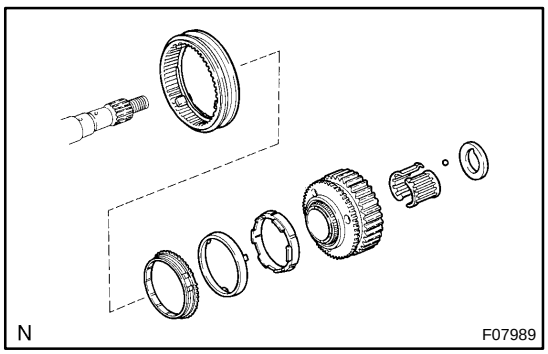
N F07989

(b) Remove the spacer and ball.
(c) Remove the drive sprocket, needle roller bearing, synchronizer outer, center and inner rings.
(d) Remove the front drive clutch sleeve assembly.

4. REMOVE 3 SHIFTING KEYS AND 2 KEY SPRINGS FROM FRONT DRIVE CLUTCH SLEEVE

TR09O–01

INSPECTION

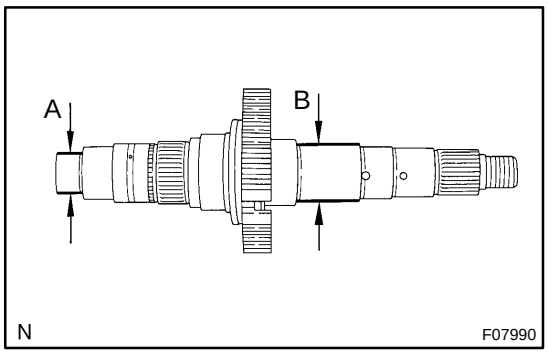

1. INSPECT REAR OUTPUT SHAFT

Using a micrometer, measure the rear output shaft journal surface outer diameter.

Minimum diameter:
Part A: 27.98 mm (1.1016 in.)
Part B: 36.98 mm (1.4561 in.)

If the outer diameter is less than the minimum, replace the rear output shaft.

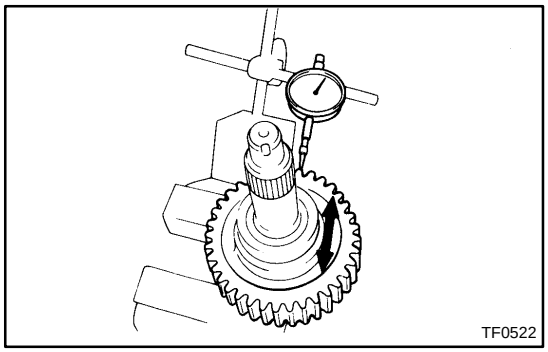

2. INSPECT DRIVE SPROCKET RADIAL CLEARANCE

Using a dial indicator, measure the radial clearance between the sprocket and shaft with the needle roller bearing installed.

Standard clearance:
0.010 – 0.055 mm (0.0004 – 0.0022 in.)
Maximum clearance: 0.055 mm (0.0022 in.)

If the clearance exceeds the maximum, replace the drive sprocket, rear output shaft or needle roller bearing.

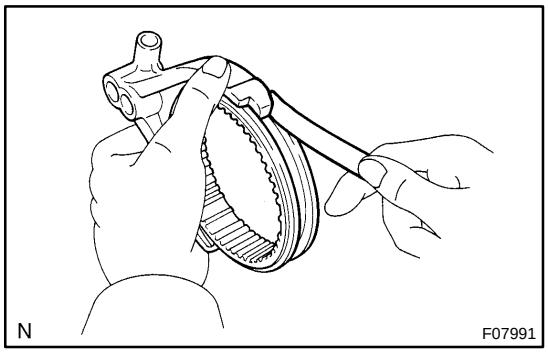

3. INSPECT FRONT DRIVE SHIFT FORK AND CLUTCH SLEEVE CLEARANCE

Using a feeler gauge, measure the clearance between the front drive shift fork and clutch sleeve.

Maximum clearance: 1.0 mm (0.039 in.)

If the clearance exceeds the maximum, replace the shift fork or clutch sleeve.

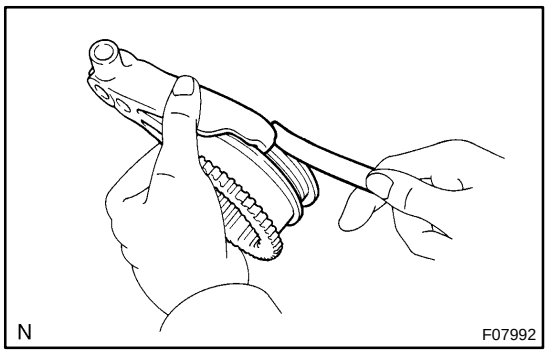

4. INSPECT HIGH AND LOW SHIFT FORK AND CLUTCH SLEEVE CLEARANCE

Using a feeler gauge, measure the clearance between the high and low shift fork and clutch sleeve.

Maximum clearance: 1.0 mm (0.039 in.)

If the clearance exceeds the maximum, replace the shift fork or clutch sleeve.

TR09P–01

REASSEMBLY

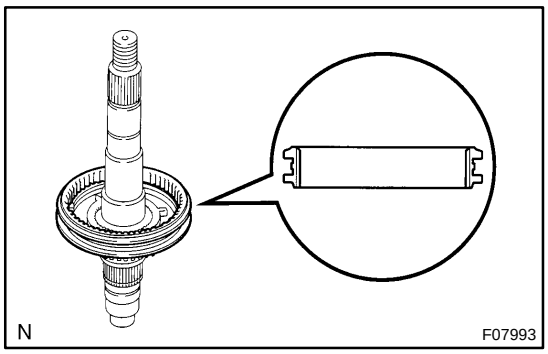

1. INSTALL FRONT DRIVE CLUTCH SLEEVE ONTO REAR OUTPUT SHAFT

(a) Install the front drive clutch sleeve onto the rear output shaft.

NOTICE:

Make sure that the clutch sleeve is installed facing in the correct direction.

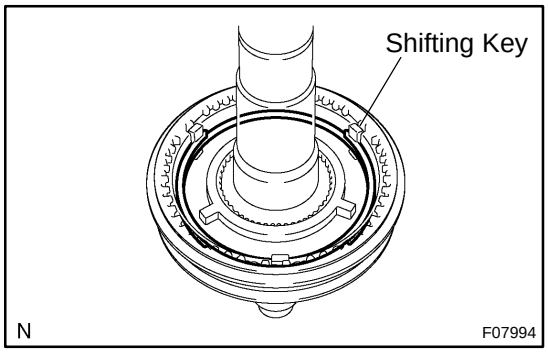

(b) Install the 3 shifting keys and 2 springs.

NOTICE:

Install the key springs positioned so that their end gaps are not in line.

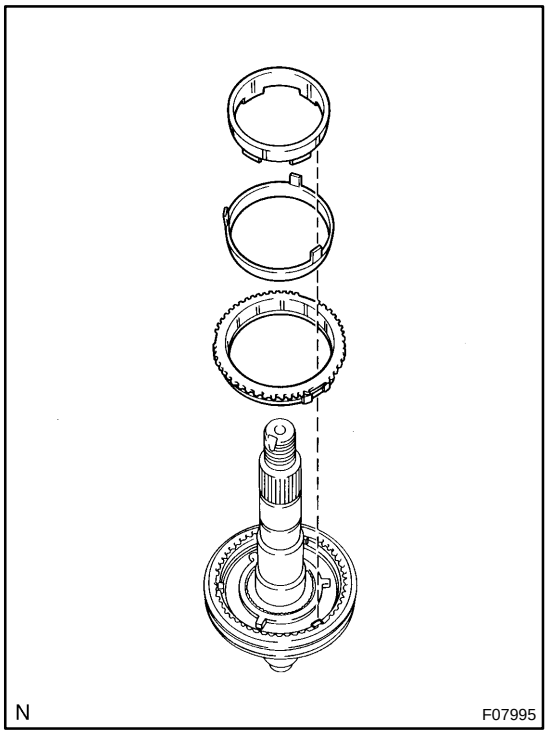

2. INSTALL SYNCHRONIZER OUTER, CENTER AND INNER RINGS, DRIVE SPROCKET, SPACER AND BEARING

(a) Apply gear oil to the rear output shaft and needle roller bearing.

(b) Install the synchronizer outer ring to the rear output shaft.

NOTICE:

Align the slots of the synchronizer outer ring with the shifting keys.

(c) Install the synchronizer center and inner rings to the rear output shaft.

NOTICE:

Align the slots of the synchronizer outer with those of inner rings.

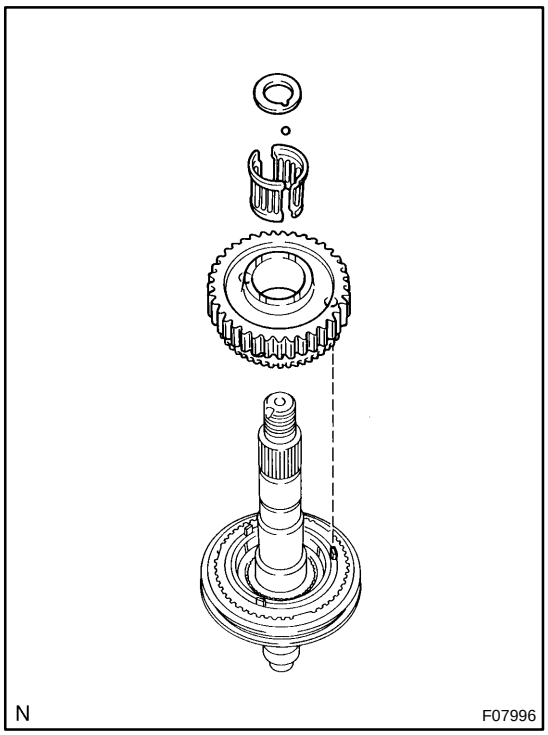

(d) Install the needle roller bearing to the rear output shaft.
(e) Install the drive sprocket to the rear output shaft.

NOTICE:

Align the holes in the drive sprocket with the protrusions of the synchronizer center ring.

(f) Install the spacer to align it with the ball.

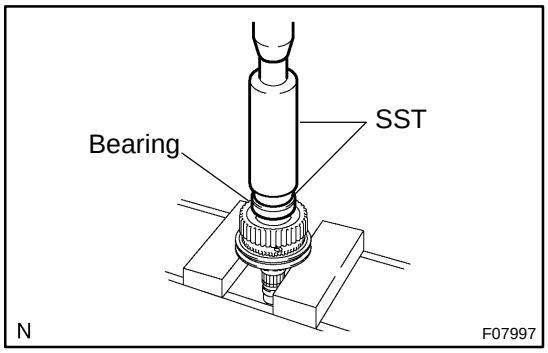

(g) Using SST and a press, install a new bearing with the outer race snap ring groove toward the rear.
SST 09316–60011 (09316–00011, 09316–00071)

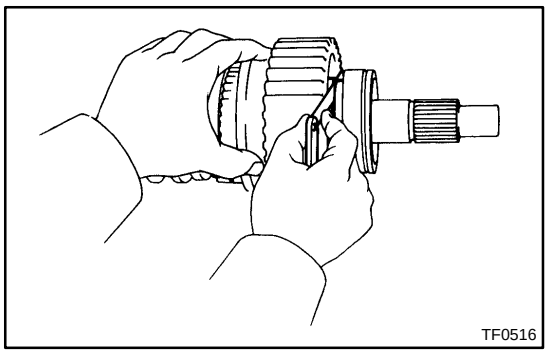

3. INSPECT DRIVE SPROCKET THRUST CLEARANCE

Using a feeler gauge, measure the drive sprocket thrust clearance.

Standard clearance:
0.10 – 0.25 mm (0.0039 – 0.0098 in.)

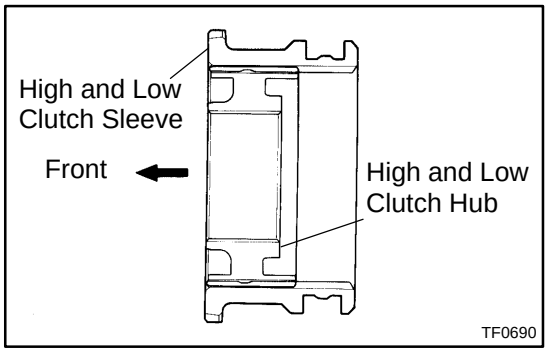

4. INSERT HIGH AND LOW CLUTCH HUB ONTO CLUTCH SLEEVE

NOTICE:

Make sure that the high and low clutch hub is installed facing in the correct direction.

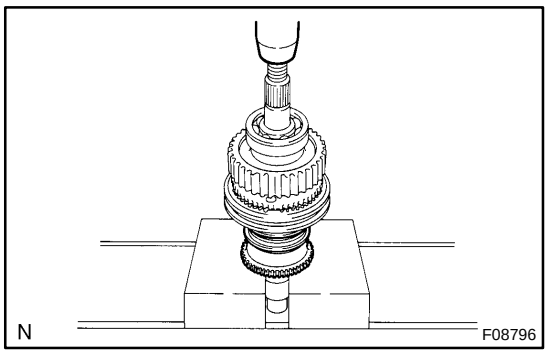

5. INSTALL HIGH AND LOW CLUTCH HUB ASSEMBLY

Using a press, install the high and low clutch hub assembly.

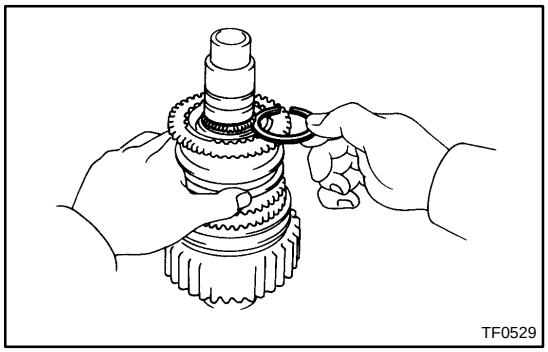

6. INSTALL SNAP RING

Select a snap ring that allows minimum axial play and install it to the shaft.

Mark	Thickness mm (in.)
A	2.10 – 2.15 (0.0827 – 0.0846)
B	2.15 – 2.20 (0.0846 – 0.0866)
C	2.20 – 2.25 (0.0866 – 0.0886)
D	2.25 – 2.30 (0.0886 – 0.0906)
E	2.30 – 2.35 (0.0906 – 0.0925)
F	2.35 – 2.40 (0.0925 – 0.0945)
G	2.40 – 2.45 (0.0945 – 0.0965)
H	2.45 – 2.50 (0.0965 – 0.0984)
J	2.50 – 2.55 (0.0984 – 0.1004)
K	2.00 – 2.05 (0.0787 – 0.0807)
L	2.05 – 2.10 (0.0807 – 0.0827)

INPUT SHAFT

COMPONENTS

TR00L–06

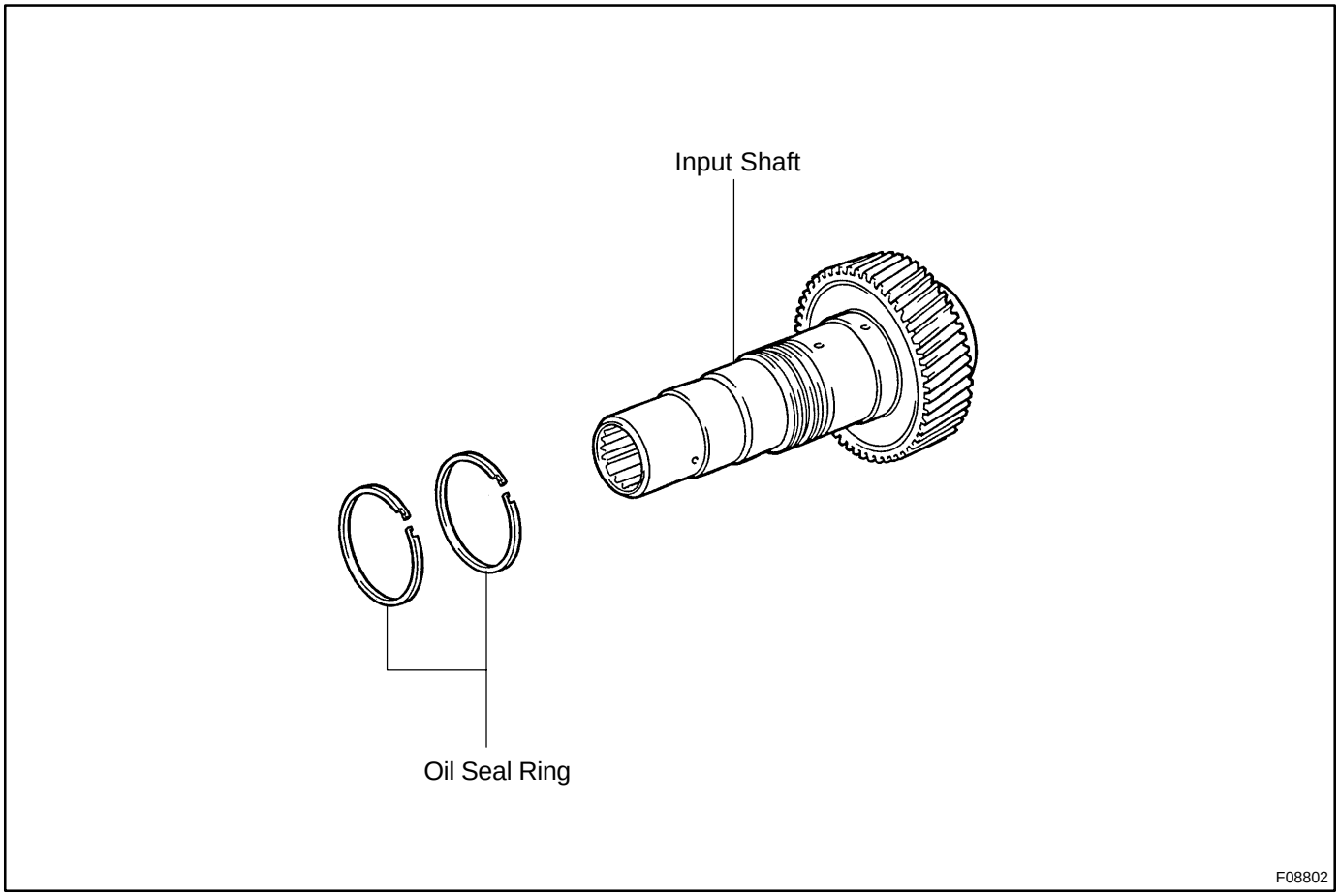

TR09Q–01

INSPECTION

1. REMOVE OIL SEAL RING

Remove the 2 oil seal rings.

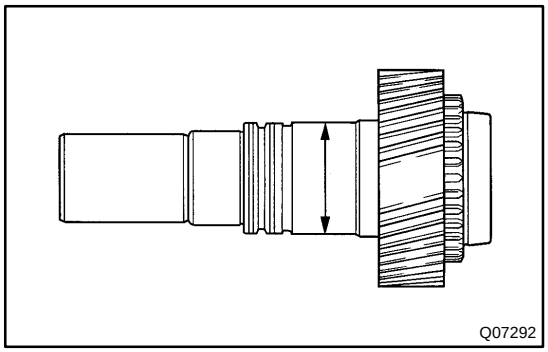

2. INSPECT INPUT SHAFT

(a) Using a micrometer, measure the outer diameter of the input shaft journal surface.

Minimum diameter: 47.59 mm (1.8736 in.)

If the outer diameter is less than the minimum, replace the input shaft.

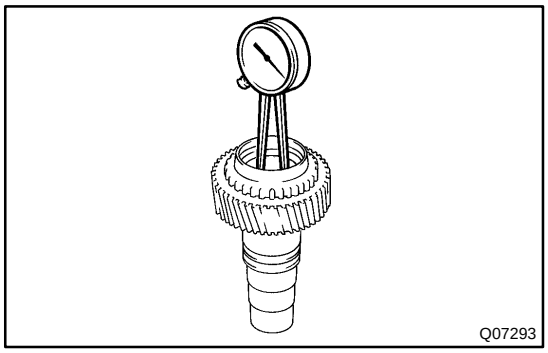

(b) Using a dial indicator, measure the inside diameter of the input shaft bushing.

Maximum inside diameter: 39.14 mm (1.5409 in.)

If the inside diameter exceeds the maximum, replace the input shaft.

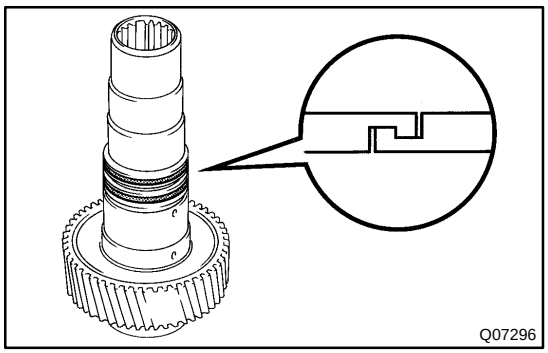

3. INSTALL OIL SEAL RING

Install the 2 oil seal rings.

HINT:

- ▲ Apply gear oil to the oil seal ring.
- ▲ Hang securely to eliminate clearance.

PLANETARY GEAR

COMPONENTS

TR00N–06

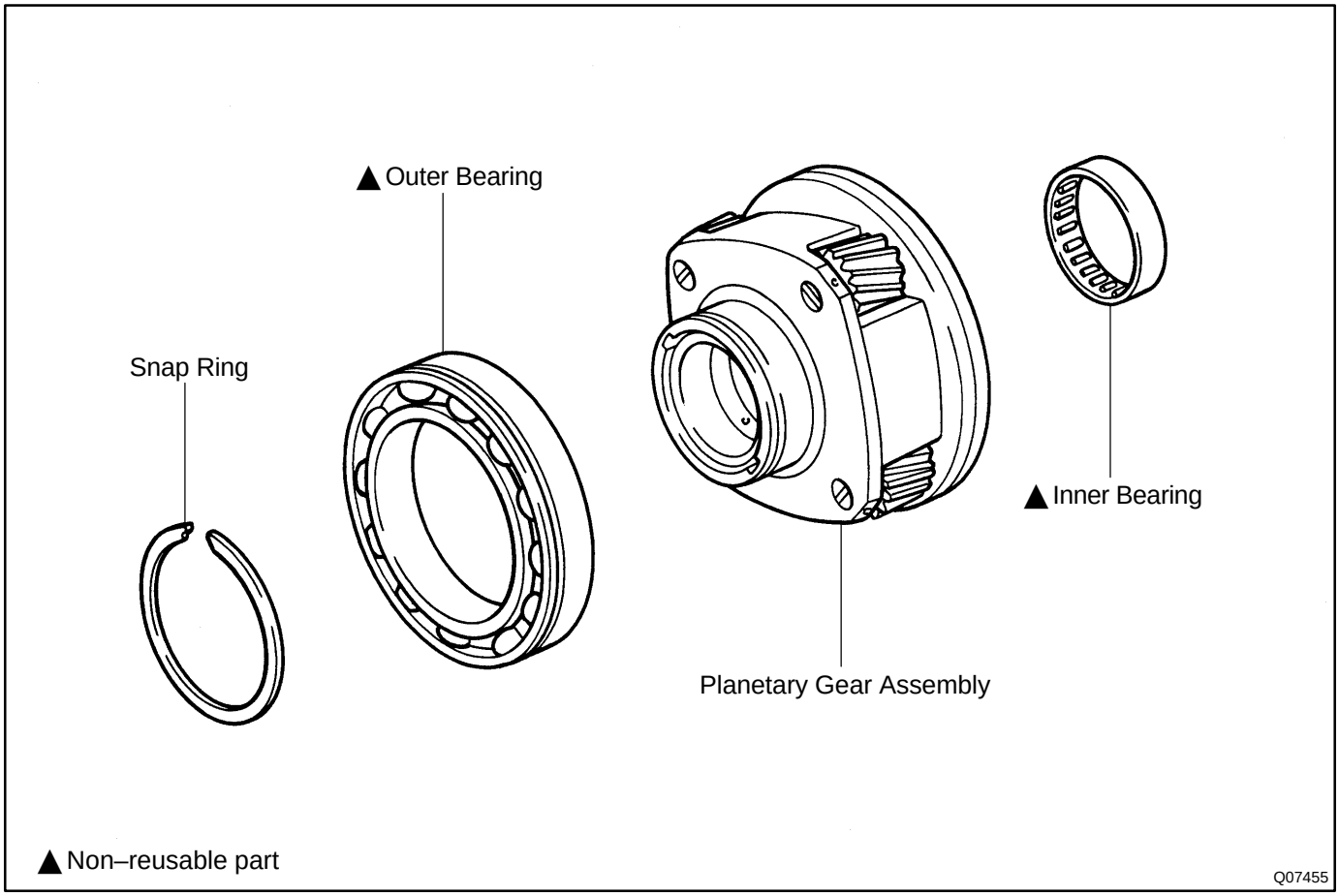

TR00O–06

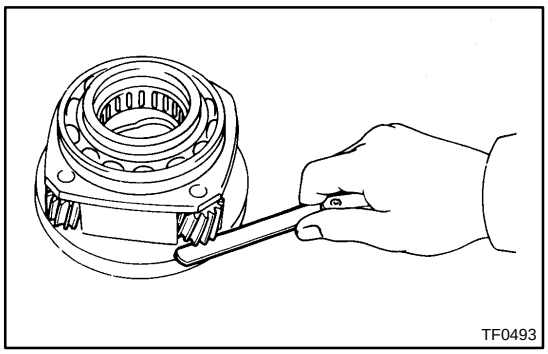
TF0493

INSPECTION

1. INSPECT PINION GEAR THRUST CLEARANCE

Using a feeler gauge, measure the planetary pinion gear thrust clearance.

Standard clearance:
0.11 – 0.84 mm (0.0043 – 0.0331 in.)
Maximum clearance:
0.84 mm (0.0331 in.)

If the clearance exceeds the maximum, replace the planetary gear assembly.

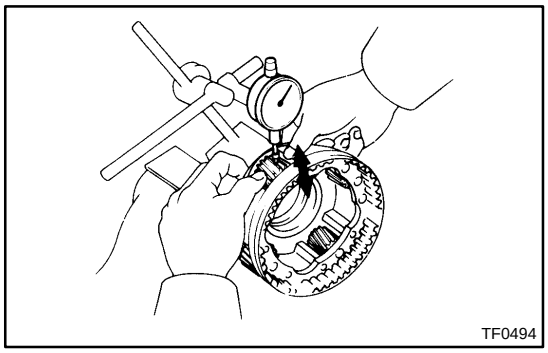
TF0494

2. INSPECT PLANETARY PINION GEAR RADIAL CLEARANCE

Using a dial indicator, measure the planetary pinion gear radial clearance.

Standard clearance:
0.009 – 0.038 mm (0.0004 – 0.0015 in.)
Maximum clearance:
0.038 mm (0.0015 in.)

If the clearance exceeds the maximum, replace the planetary gear assembly.

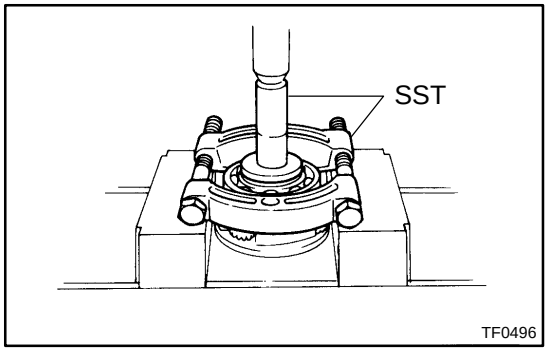

TF0496

3. IF NECESSARY, REPLACE PLANETARY GEAR OUTER BEARING

(a) Using a snap ring expander, remove the snap ring.

(b) Using SST and a press, remove the bearing.
SST 09554–30011, 09555–55010

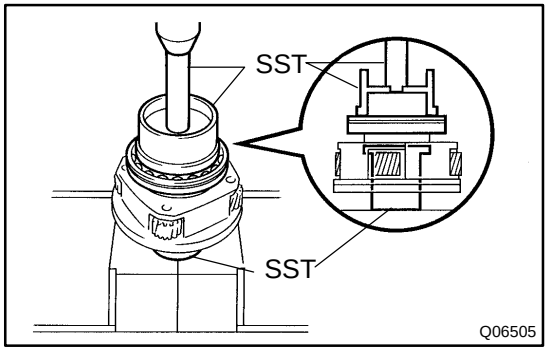

Q06505

(c) Using SST and a press, install a new bearing with the groove facing forward.
SST 09223–15020, 09515–30010, 09950–70010 (09951–07100)

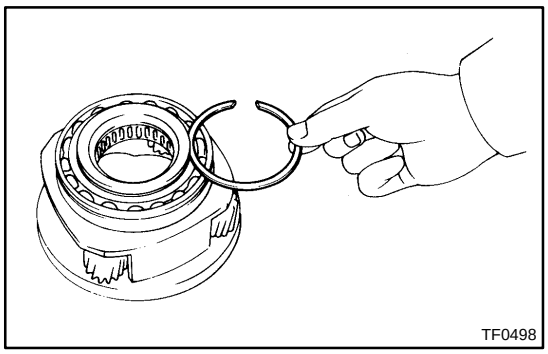

(d) Select a snap ring that allows the minimum axial play.

Mark	Thickness mm (in.)
1	1.45 – 1.50 (0.0571 – 0.0591)
2	1.50 – 1.55 (0.0591 – 0.0610)
3	1.55 – 1.60 (0.0610 – 0.0630)
4	1.60 – 1.65 (0.0630 – 0.0650)
5	1.65 – 1.70 (0.0650 – 0.0669)

(e) Using a snap ring expander, install a snap ring.

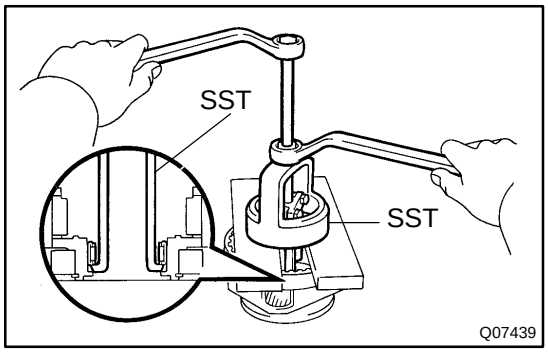

4. IF NECESSARY, REPLACE PLANETARY GEAR INNER BEARING

(a) Using SST, remove the bearing.
SST 09612–65014 (09612–01030, 09612–01050)

NOTICE:
Hang SST securely to the clearance between the inner bearing and planetary gear.

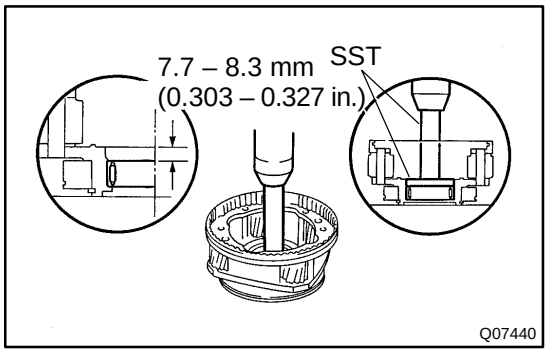

(b) Using SST and a press, install a new bearing.
SST 09950–60010 (09951–00570), 09950–70010 (09951–07100)
Bearing press in depth: 7.7 – 8.3 mm (0.303 – 0.327 in.)

OIL SEAL

COMPONENTS

TR00P–06

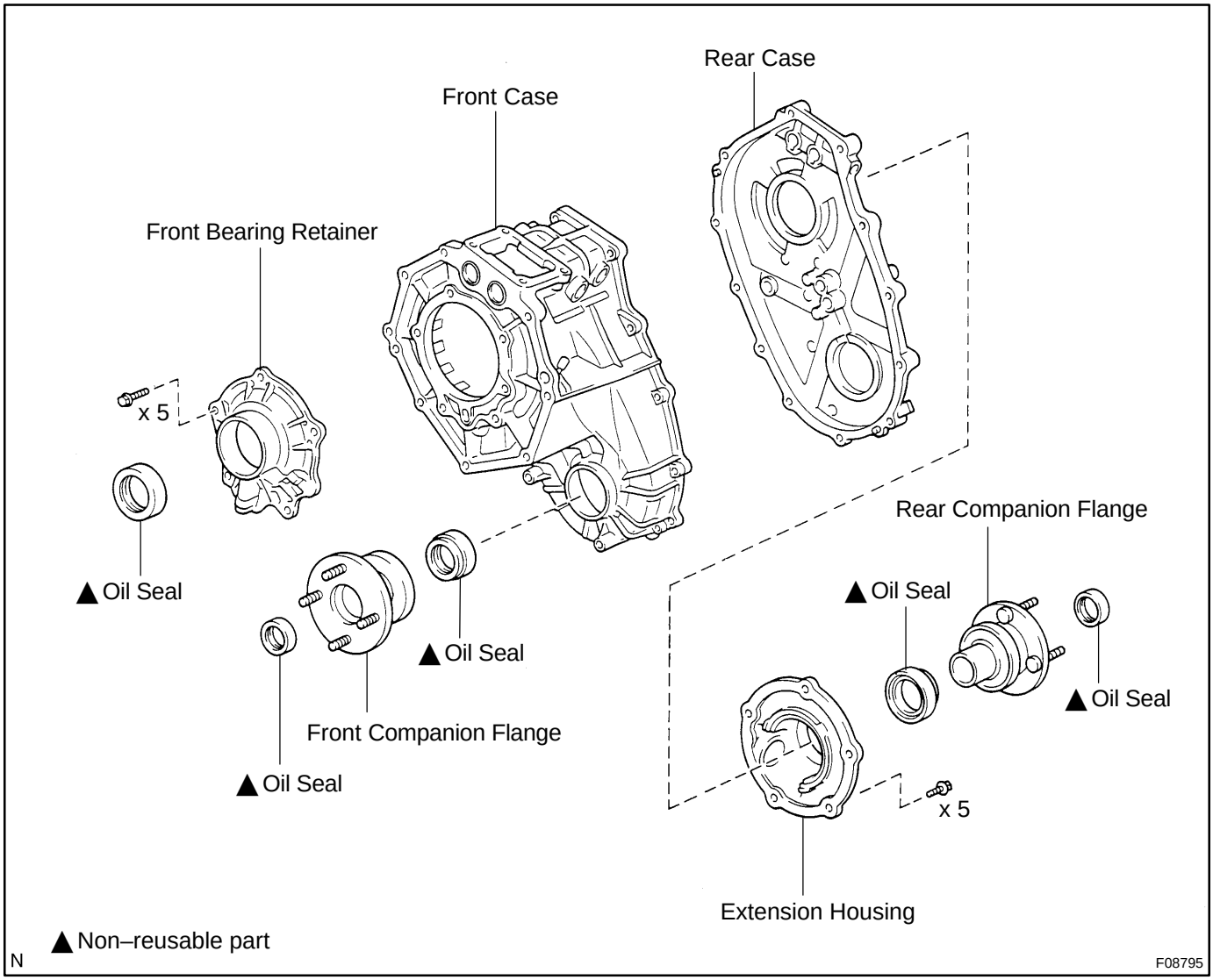

TR09R–01

REPLACEMENT

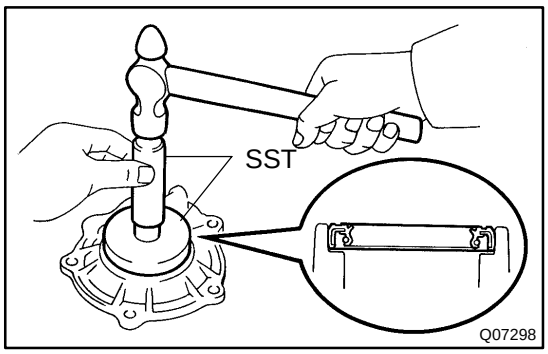

1. IF NECESSARY, REPLACE FRONT BEARING RETAINER OIL SEAL

(a) Using a screwdriver and hammer, drive out the oil seal.

(b) Using SST and a hammer, drive in a new oil seal until its surface is flush with the retainer upper surface.
SST 09950–60010 (09951–00590), 09950–70010 (09951–07100)

(c) Coat the lip of the oil seal with MP grease.

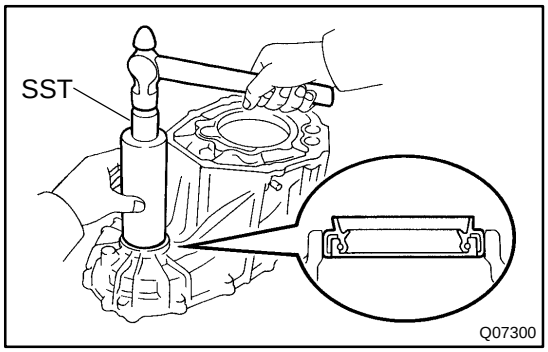

2. IF NECESSARY, REPLACE FRONT CASE OIL SEAL

(a) Using a screwdriver and hammer, drive out the oil seal.

(b) Using SST and a hammer, drive in a new oil seal until its surface is flush with the case upper surface.
SST 09316–60011 (09316–00011)

(c) Coat the lip of the oil seal with MP grease.

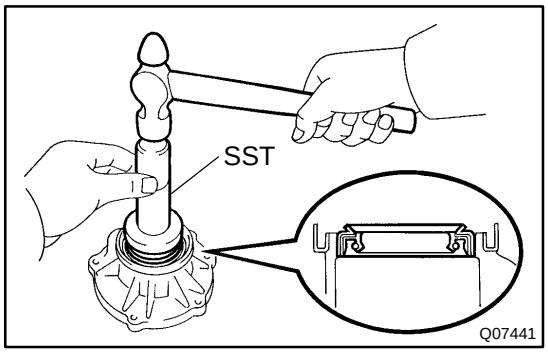

3. IF NECESSARY, REPLACE EXTENSION HOUSING OIL SEAL

(a) Using a screwdriver and hammer, drive out the oil seal.

(b) Using SST and a hammer, drive in a new oil seal until its surface is flush with the housing upper surface.
SST 09554–22010

(c) Coat the lip of the oil seal with MP grease.

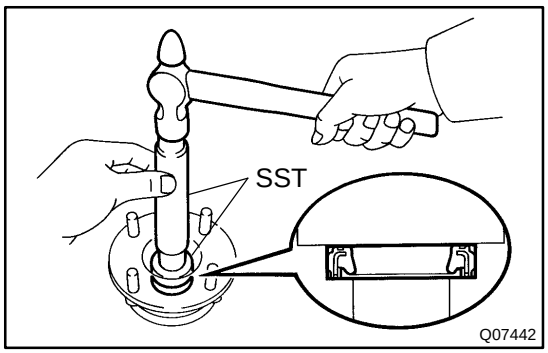

4. IF NECESSARY, REPLACE FRONT AND REAR COMPANION FLANGE OIL SEALS

(a) Using a screwdriver and hammer, drive out the 2 oil seals from the 2 flanges.

(b) Using SST and a hammer, drive in 2 new oil seals.
SST 09950–60010 (09951–00220, 09951–00350, 09952–06010), 09950–70010 (09951–07100)

(c) Coat the lip of the oil seal with MP grease.

TOUCH SELECT 2–4 AND HIGH–LOW SYSTEM

TR09S–01

LOCATION

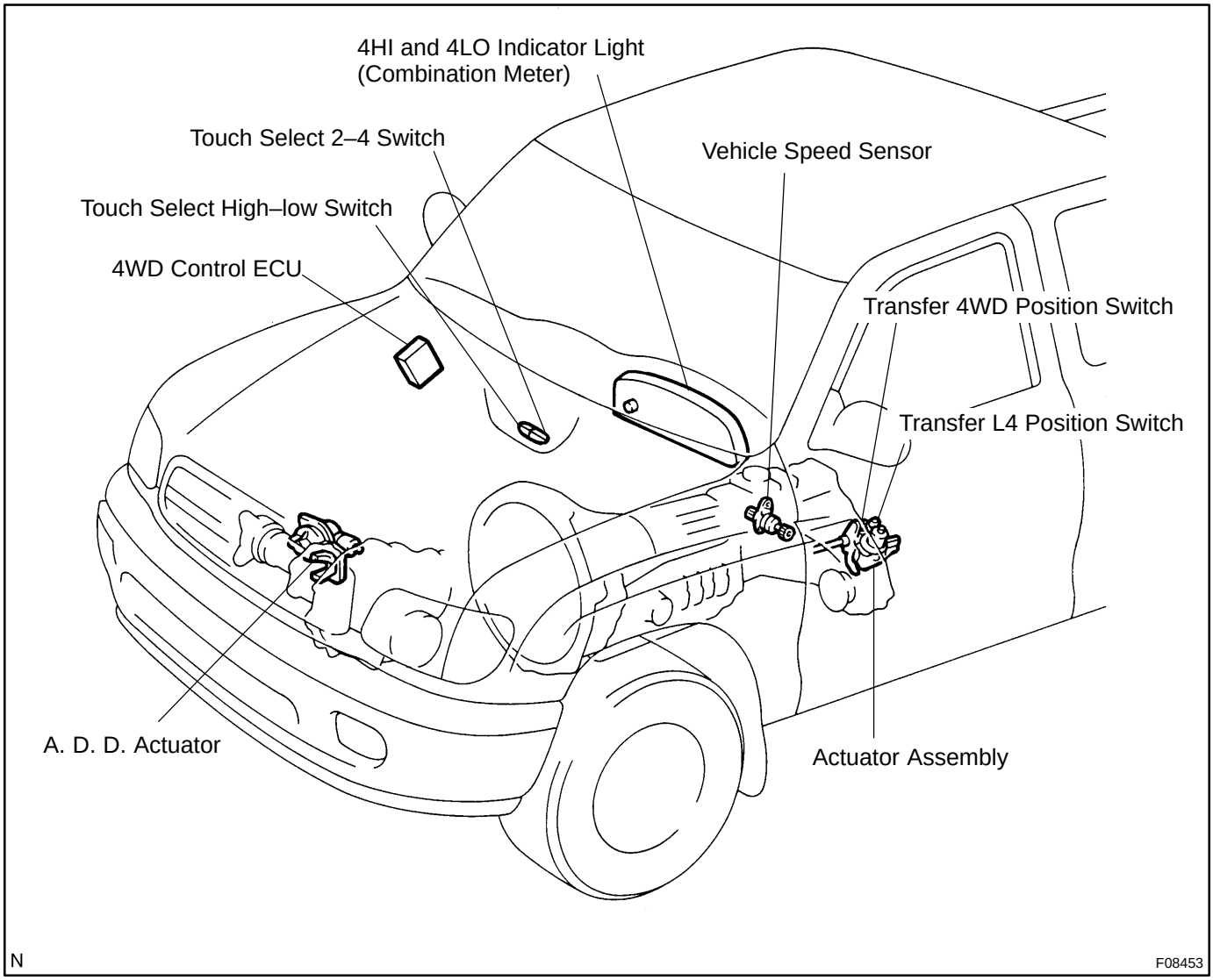

TR09T–01

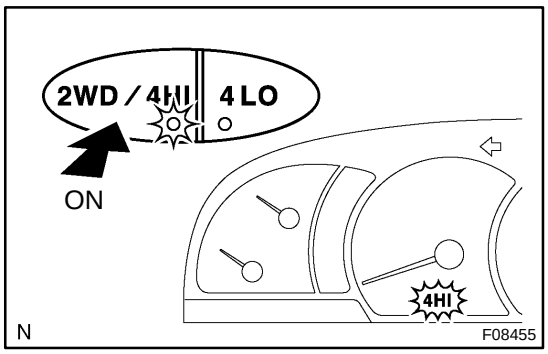

INSPECTION

1. INSPECT 2WD ↔ 4HI SHIFT

(a) Ignition switch ON.

(b) Check that the 4HI indicator lights come on when the touch select 2–4 switch is in ON position.

(c) Check that the 4HI indicator lights go off when the touch select 2–4 switch is in OFF position.

HINT:

▲ If the light does not light up, even though the switch has been turned ON, the vehicle should be moved back and forth.

▲ If switching is not completed after 3 seconds of shift operation, the 4HI indicator light will flash.

2. INSPECT 4HI ↔ 4LO SHIFT

(a) Ignition switch ON.

(b) Shift the transmission shift lever in N position.

(c) Turn the touch select 2–4 switch ON.

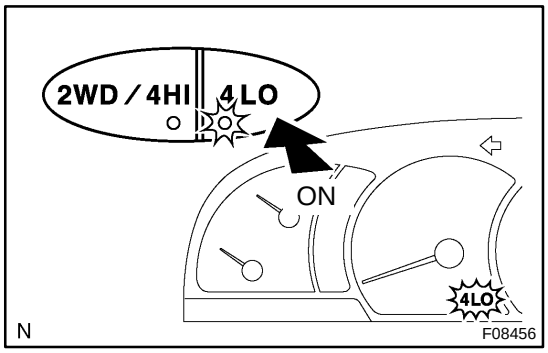

(d) Check that the 4LO indicator lights come on and the 4HI indicator lights go off when the touch select high–low switch is in ON position.

(e) Check that the 4LO indicator lights go off and the 4HI indicator lights come on when the touch select high–low switch is in OFF position.

HINT:

▲ Inspection should be performed with the vehicle stopped, and transmission shift lever in N position.

▲ If switching is not completed after 3 seconds of shift operation, the 4LO indicator light will flash.

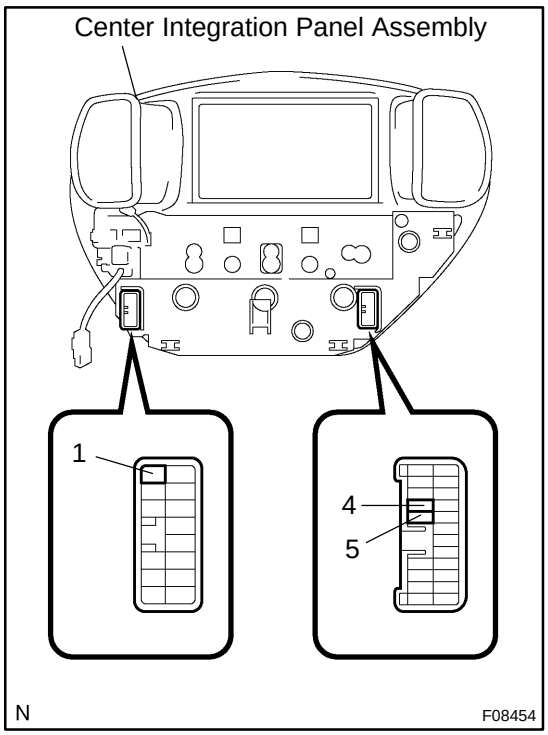

3. INSPECT TOUCH SELECT 2–4 AND HIGH–LOW SWITCH CONTINUITY

(a) Remove center integration panel assembly (See page BO–72).

(b) Inspect the continuity between the each terminals.

Touch select 2–4 switch:

Switch position	Tester connection	Specified condition
OFF	1–5	No continuity
ON	1–5	Continuity

Touch select high–low switch:

Switch position	Tester connection	Specified condition
OFF	1–4	No continuity
ON	1–4	Continuity

If continuity is not as specified, replace the center integration panel assembly (See page BO–79).

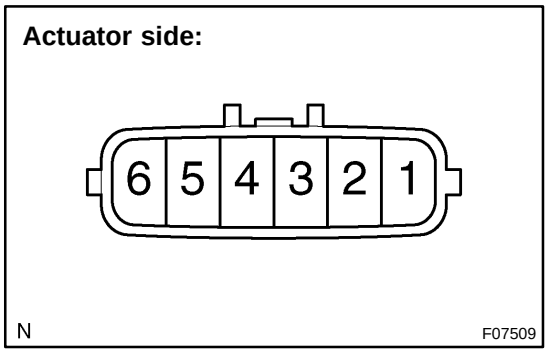

4. INSPECT ACTUATOR RESISTANCE

(a) Using an ohmmeter, measure the resistance between terminals 1 and 2.

Standard resistance: 0.3 – 100 Ω

(b) Using an ohmmeter, measure the resistance between terminals 1 or 2 and body ground.

Standard resistance: More than 0.5 MΩ

If resistance value is not as specified, replace the actuator assembly.

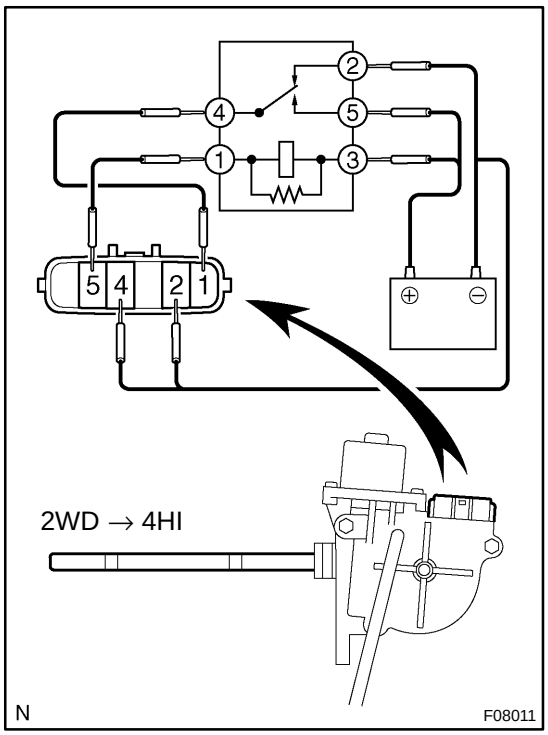

5. INSPECT ACTUATOR OPERATION

(a) 2WD → 4HI shift:

Connect lines via a relay as shown in the illustration, then check that the actuator fork shaft moves to 2WD → 4HI position.

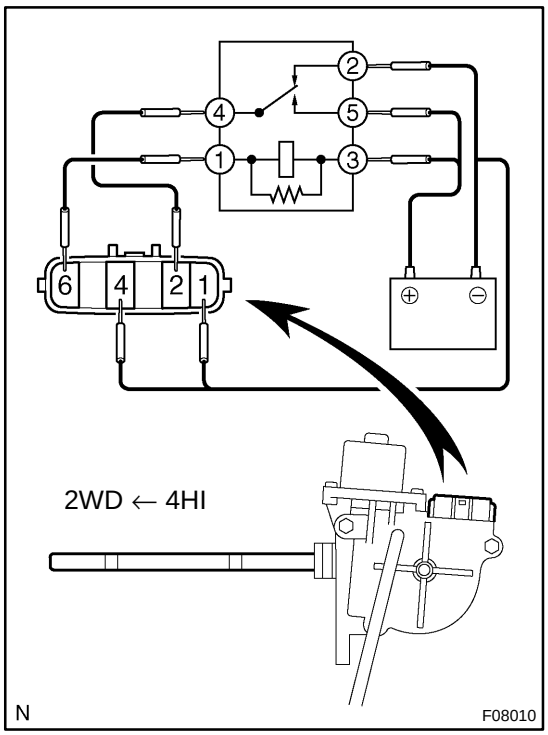

(b) 4HI → 2WD shift:
Connect lines via a relay as shown in the illustration, then check that the actuator fork shaft moves to 4HI → 2WD position.

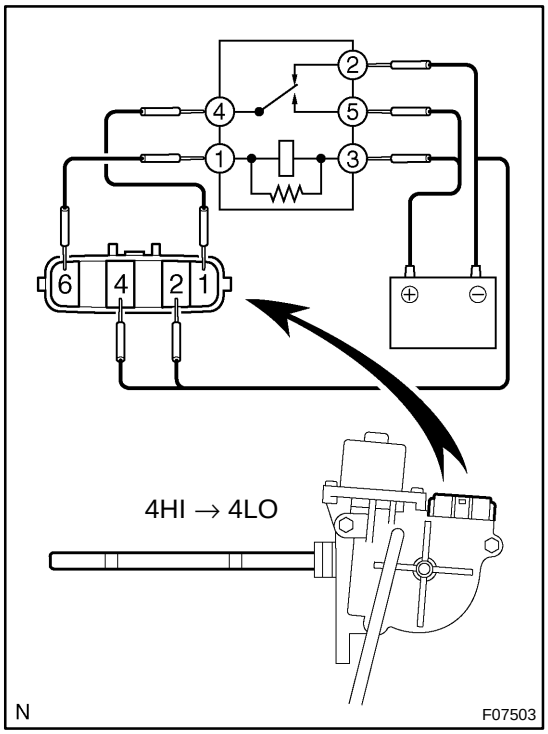

(c) 4HI → 4LO shift:
Connect lines via a relay as shown in the illustration, then check that the actuator fork shaft moves to 4HI → 4LO position.

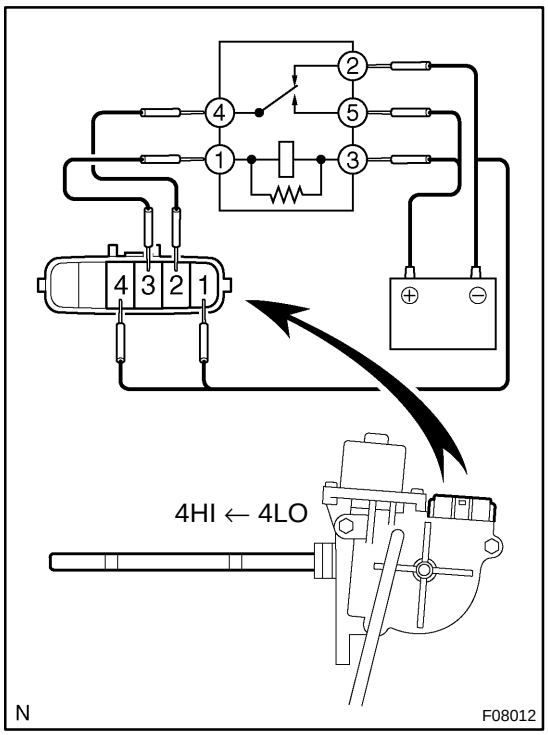

(d) 4LO → 4HI shift:
Connect lines via a relay as shown in the illustration, then check that the actuator fork shaft moves to 4LO → 4HI position.

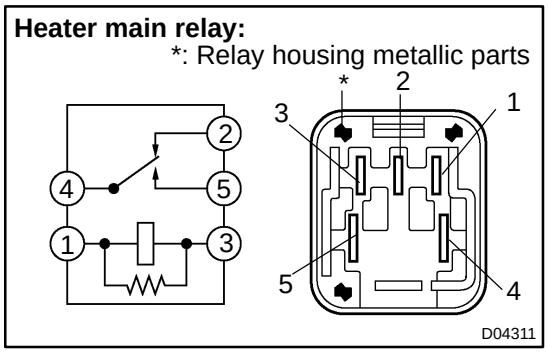

HINT:
When inspecting the operation described above, use a heater main relay.

NOTICE:

Connect the terminals being careful not to touch the neighboring terminals or metallic parts of relay housing.

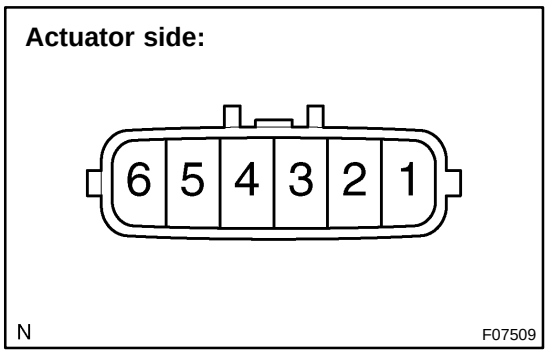

6. INSPECT LIMIT SWITCH CONTINUITY

(a) Start the engine and raise the vehicle.

(b) With the actuator connector connected, shift the transfer shift lever and after checking the operating sound, disconnect the connector and inspect the continuity between each terminal.

HINT:

When shifting the actuator fork shaft, connect the connectors.

Shift position	Tester connection	Specified condition
2WD	3–4	No continuity
	3–5	No continuity
	3–6	No continuity
	4–5	Continuity
	4–6	No continuity
	5–6	No continuity
4HI	3–4	No continuity
	3–5	No continuity
	3–6	No continuity
	4–5	No continuity
	4–6	Continuity
	5–6	No continuity
4LO	3–4	Continuity
	3–5	No continuity
	3–6	No continuity
	4–5	No continuity
	4–6	No continuity
	5–6	No continuity

7. INSPECT VEHICLE SPEED SENSOR
(See page BE–52)

8. INSPECT 4HI AND 4LO INDICATOR LIGHT

Check the combination meter (See page BE–52).

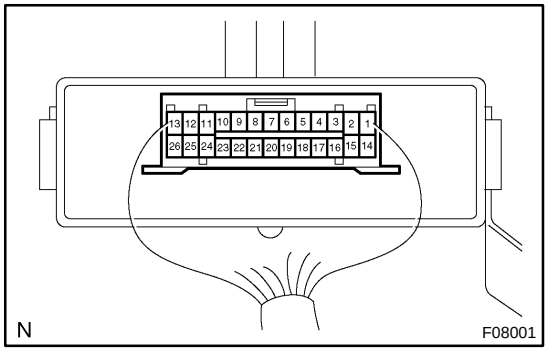

9. INSPECT 4WD CONTROL ECU

Connect the wire harness side connector to the 4WD control ECU and inspect wire harness side connector from the back side, as shown.

STANDARD VALUE OF ECU TERMINAL

Terminals (Symbols)	Condition	STD Voltage (V)
3 (SPD) – 25 (GND)	During driving	Pulse generation
4 (2–4) – 25 (GND)	▲Ignition switch ON ▲Touch select 2–4 switch OFF → ON	10 – 14 → 2 or less
5 (N) – 25 (GND)	▲Ignition switch ON ▲Transmission shift lever other positions → transmission shift lever N position	10 – 14 → 2 or less
6 (4WD) – 25 (GND)	▲Ignition switch ON ▲Touch select 2–4 switch OFF → ON	10 – 14 → 2 or less
7 (H–L) – 25 (GND)	▲Ignition switch ON, touch select 2–4 switch ON ▲Touch select high–low switch OFF → ON	10 – 14 → 2 or less
8 (TL3) – 25 (GND)	▲Ignition switch ON, touch select 2–4 switch ON ▲4HI (touch select high–low switch OFF) → 4LO (touch select high–low switch ON)	10 – 14 → 2 or less
9 (TL1) – 25 (GND)	▲Ignition switch ON ▲4HI (touch select 2–4 switch ON) → 2WD (touch select 2–4 switch OFF)	10 – 14 → 2 or less
10 (DL1) – 25 (GND)	▲Ignition switch ON ▲A.D.D. FREE → LOCK	10 – 14 → 0.5 or less
11 (DM1) – 24 (DM2)	▲Ignition switch ON ▲A.D.D. LOCK	10 – 14 (for about 5 seconds) then less than 0.5
	▲Ignition switch ON ▲A.D.D. FREE	
12 (IG) – 25 (GND)	Ignition switch ON	10 – 14
13 (TM1) – 26 (TM2)	▲Ignition switch ON ▲Touch select 2–4 switch OFF	10 – 14 (for about 5 seconds) then less than 0.5
	▲Ignition switch ON ▲Touch select 2–4 switch ON	
18 (L4) – 25 (GND)	▲Ignition switch ON, touch select 2–4 switch ON ▲Touch select high–low switch OFF→ON	10 – 14 → 2 or less
19 (ADD) – 25 (GND)	▲Ignition switch ON ▲A.D.D. LOCK	10 – 14 → 2 or less
20 (IND2) – 25 (GND)	▲Ignition switch ON ▲Touch select high–low switch ON	1.5 – 3.5
21 (IND1) – 25 (GND)	▲Ignition switch ON ▲Touch select 2–4 switch ON	1.5 – 3.5
22 (TL2) – 25 (GND)	▲Ignition switch ON ▲2WD (touch select 2–4 switch OFF) → 4HI (touch select 2–4 switch ON)	10 – 14 → 2 or less
23 (DL2) – 25 (GND)	▲Ignition switch ON ▲A.D.D. LOCK → FREE	10 – 14 → 0.5 or less
25 (GND) – Body ground	Ignition switch OFF	Continuity

TOYOTA TUNDRA

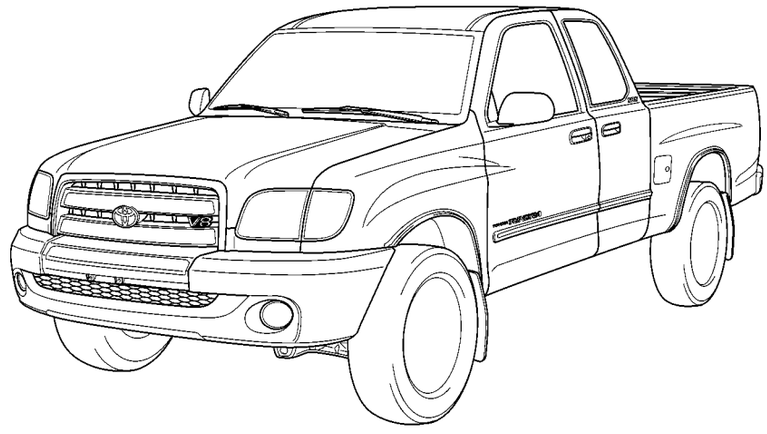

228TU01

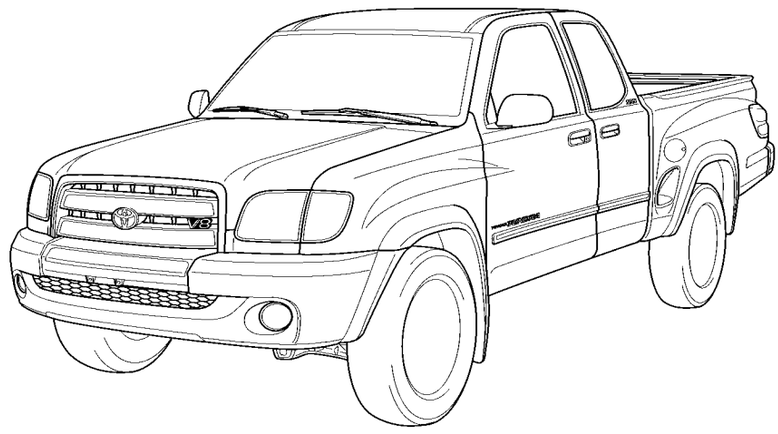

228TU02

TOYOTA TUNDRA

OUTLINE OF NEW FEATURES

The following changes are made for the 2003 model year.

1. Model Line-up

On the models for the U.S.A., a StepSide bed model has been created by adopting a new deck design.

Four models for the U.S.A. have been discontinued.

Four models for Canada have been discontinued.

Item	New	Discontinued	
Destination	North America	North America	Canada
Model Code	UCK30L-ASSSKA -ASSLKA UCK40L-ASSSKA -ASSLKA	VCK30L-ARSLKA VCK40L-TRMSKA -TRSSKA -ARSLKA	VCK30L-TRMDKK UCK30L-ARSLKK VCK40L-TRSDKK -ARSSKK

2. Exterior

The exterior design has been changed to integrate strength and sophistication and emphasize uniqueness. For details, refer to page 218.

The lineup of exterior colors consists of 3 new colors and 5 carryover colors as indicated below.

Color (Color No.)		Note
Dark Gray Mica Metallic	(1E3)	New
Dark Red MicaMetallic	(3Q3)	
Dark Blue Mica	(8Q0)	
White	(056)	Carry Over
Silver Metallic	(1D6)	
Black	(202)	
Beige Mica Metallic	(4Q2)	
Dark Green Mica	(6Q7)	Carry Over

A new design 17 x 7 1/2 JJ size disc wheel and 265/65R17 size tire have been adopted as optional equipment for access cab model with 2UZ-FE engine.

Tire Size	265/65R17
Disc Wheel Size	17 × 7 1/2JJ
Disc Wheel Material	Aluminum
P.C.D.* mm (in.)	139.7 (5.5)
Off Set mm (in.)	15.0 (0.59)
Wheel Design	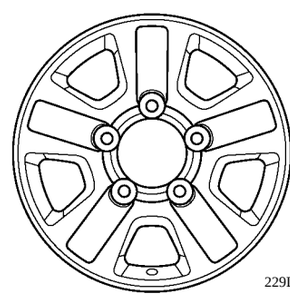 229LC104

*: Pitch Circle Diameter

3. Interior

The interior design has been changed to one that offers a more SUV-like (Sports Utility Vehicle) elegance and utility. For details, refer to page 220.

4. 5VZ-FE Engine

The ’03 model complies with the LEV (Low Emission Vehicle) and SFTP (Supplementary Federal Test Procedure) emission regulations and LEV-II (Low Emission Vehicle II) evaporative emission regulation.

The ’03 model uses the same link type ETCS-i (Electronic Throttle Control System-intelligent) that is used on the ’02 model with the 2UZ-FE engine.

Segment Conductor type alternator has been adopted.

To comply with the OBD-II (On-Board Diagnosis II) regulations, all the DTC (Diagnostic Trouble Code) have been made to correspond to the SAE controlled codes. Some of the DTC have been further divided into smaller detection areas than in the past, and new DTC have been assigned to them. For details, refer to 2003 General Features section.

5. 2UZ-FE Engine

The ’03 model complies with the ULEV (Ultra Low Emission Vehicle) and SFTP emission regulations and LEV-II evaporative emission regulation.

The ETCS-i (Electronic Control System-intelligent) continues to be used from the ’02 model. However, on the ’03 model, the accelerator cable has been discontinued and an accelerator position sensor has been provided on the accelerator pedal. A no-contact type throttle position sensor has been adopted on all models.

Cranking hold function has been adopted. Once the ignition switch is turned to the START position, this control continues to operate the starter until the engine starts.

Segment Conductor type alternator has been adopted.

To comply with the OBD-II (On-Board Diagnosis II) regulations, all the DTC (Diagnostic Trouble Code) have been made to correspond to the SAE controlled codes. Some of the DTC have been further divided into smaller detection areas than in the past, and new DTC have been assigned to them. For details, refer to 2003 General Features section.

6. A340E and A340F Automatic Transmission

The line pressure control using a linear solenoid valve (SLT), which was adopted on the ’02 model with the 2UZ-FE engine, has also been adopted on the ’03 model with the 5VZ-FE engine. Accordingly, the shape of the valve body and the logic of the ECM have been changed.

The previous mechanical control, which consisted of a throttle cable, cam, and throttle valve, has been changed to an electronic control system that uses a solenoid valve SLT.

The automatic transmission fluid of all models has been changed from the D-II type ATF to the T-IV type ATF.

7. Suspension

The following changes have been made to the ’03 model:

Access Cab Sport Suspension Package Model	• The front and rear suspensions have adopted blue painted Tokico shock absorbers with optimized damping force characteristics. • The front coil spring rate has been increased. • The rear leaf spring rate has been optimized. • The front stabilizer bar diameter has been increased. • The rear stabilizer bar has been adopted.
Access Cab Standard Model	• The damping force characteristics of the front and rear shock absorbers have been optimized. • The front coil spring rate has been increased. • The rear leaf spring rate has been optimized. (Only for 2WD model) • The front stabilizer bar size has been increased. (Only for 2WD model)
Standard Cab Model	Configuration and structure are the same the ’02 model

8. Brake

The ABS brake control system, which was optional equipment on the ’02 model, is now standard equipment on all models.

9. Body

To reduce body vibration, the floor has been reinforced, the mounts have been changed, and mass dampers have been adopted.

On the models with a plastic bumper, a front cross member has been adopted to ensure body rigidity.

10. Seat

CRS (Child Restrain System) lower anchorages for securing child seats have been provided behind the seat cushion of the seat

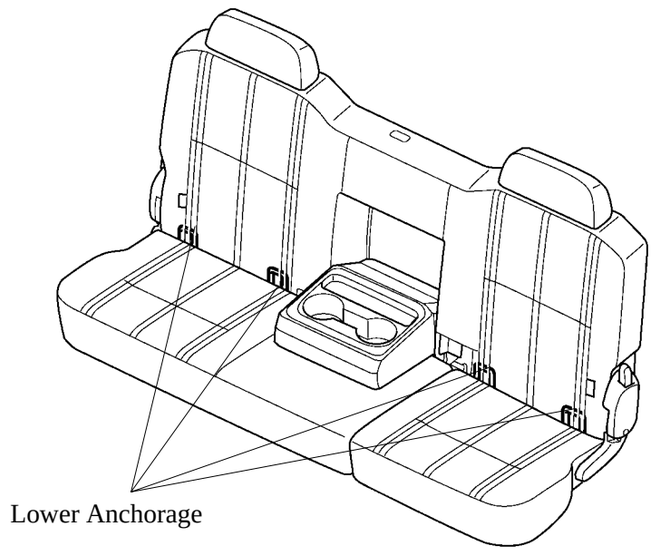

Access Cab Rear Seat 228TU04

	Regular Cab	Access Cab	
	Front Seat	Front Seat	Rear Seat
LH Side	—	—	■
RH Side	■	—	■

11. Air Conditioning

The air conditioning system in the '03 Toyota Tundra has the following features:

The size of the heater core has been increased to improve the heating capacity.

A rear foot duct has been provided to guide the warm air from the heater unit to the feet of the rear seat occupants. As a result, the heating comfort of the rear seats has been improved.

An airflow restrictor door, which increases the airflow that is directed to the occupants' feet when the heater is in the FOOT or FOOT/DEF mode has been provided in the heater unit to improve heating comfort.

A multi-tank, super-slim structure evaporator has been adopted.

▲ Performance ◀

Model			'03 Toyota Tundra	'02 Toyota Tundra
Heater	Heat Output	W (Kcal/h)	5200 (4472)	5130 (4412)
	Air Flow Volume	m^3/h	305	330
	Power Consumption	W	150	←
Air Conditioning	Cooling Capacity	W (Kcal/h)	5400 (4644)	←
	Air Flow Volume	m^3/h	480	←
	Power Consumption	W	200	←

▲ Specifications ◀

Model			'03 Toyota Tundra	'02 Toyota Tundra
Ventilation and Heater Core	Heater Core	Type	U-turn Flow	←
		Size W × H × L mm (in.)	168.3 × 220 × 36 (6.6 × 8.7 × 1.4)	155.7 × 220 × 27 (6.1 × 8.7 × 1.1)
		Fin Pitch mm (in.)	1.8 (0.07)	1.6 (0.06)
	Blower	Motor Type	S70F14T	←
		Fan Size Dia. × H mm (in.)	150 × 75 (5.9 × 3.0)	←
Air Conditioning	Condenser	Type	Multi-flow	←
		Size W × H × L mm (in.)	690 × 321 × 16 (27.2 × 12.6 × 0.6)	←
		Fin Pitch mm (in.)	3.2 (0.13)	←
	Evaporator	Type	Drawn Cup (Multi-tank, Super-slim Structure)	Drawn Cup (Single-tank)
		Size W × H × L mm (in.)	252.8 × 205 × 58 (10.0 × 8.1 × 2.3)	264 × 210 × 90 (10.4 × 8.3 × 3.5)
		Fin Pitch mm (in.)	3.0 (0.12)	3.5 (0.14)
	Compressor	Type	10PA15*1 10S17*2	←

*1: 5VZ-FE Engine Model
*2: 2UZ-FE Engine Model

12. Power Slide Back Window

A power slide back window has been adopted on the Access cab model.

By operating the power slide back window switch that is provided at the driver seat, this system enables the back window to be opened and closed.

The basic movement of this system is the same as the power window system. The drive force of the back window motor is transmitted via a window regulator cable to laterally move the carrier plate, which opens and closes the back window.

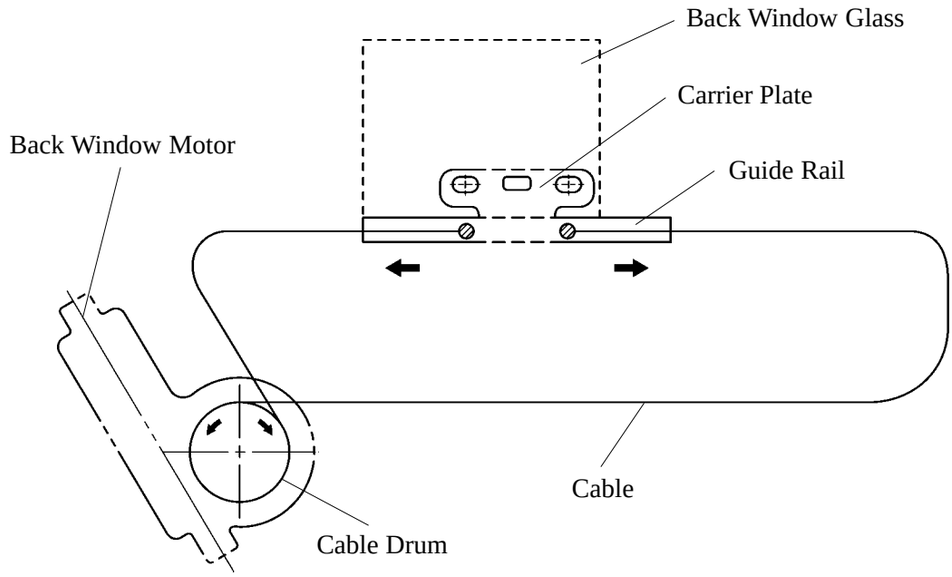

13. Theft Deterrent System and Wireless Door Lock Remote Control System

In place of the RS3000 type TVIP (Toyota Vehicle Instruction Protection) and the wireless door lock control system that were used on the ’02 model, the ’03 model has adopted an RS3200 type TVIP and a wireless door lock control system.

14. Cruise Control System (Only for 5VZ-FE Engine Model)

As with the 2UZ-FE engine model, the cruise control of the 5VZ-FE engine model is controlled by the ETCS-i. Accordingly, the components of the system have been changed as follows:

- Cruise control ECU is integrated in the ECM.
- Cruise control actuator and control cable has been discontinued.
- Throttle control motor, throttle position sensor and accelerator pedal position sensor has been adopted.

15. Mirror Heater

This system is standard equipment on the Limited grade for Canada and optional equipment on the other models.

Mirror heater is activated when the mirror heater switch is turn ON. This switch is provided with a timer function to keep the mirror heater ON for approximately 15 minutes.

16. Steering Pad Switch

A steering wheel with steering pad switches is standard equipment on the Limited grade.

The audio control switches with a high use frequency have located on the steering pad in the form of steering pad switches to improve the ease of use.

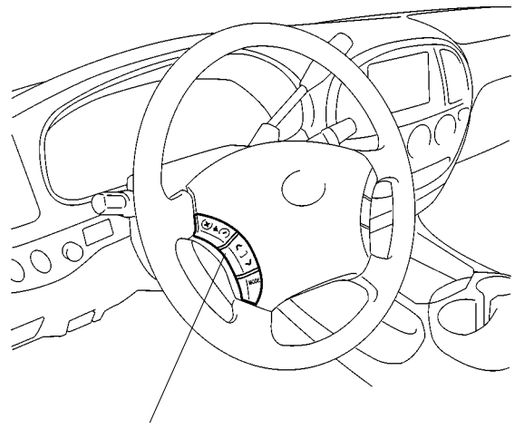

228TU06

Steering Pad Switch

■2UZ-FE ENGINE

1. General

The composition of the TWC (Three-Way Catalytic Converter) has been changed to comply with the ULEV (Ultra Low Emission Vehicle) and SFTP (Supplementary Federal Test Procedure) emission regulations.

The construction and operation of the evaporative emission control system have been changed to comply with the LEV-II (Low Emission Vehicle-II) evaporative emission regulation. The basic construction and operation are the same as 5VZ-FE engine model. For details, refer to page 233.

The ETCS-i (Electronic Control System-intelligent) continues to be used from the ’02 model. However, on the ’03 model, the accelerator cable has been discontinued and an accelerator position sensor has been provided on the accelerator pedal.

A no-contact type throttle position sensor has been adopted on all models.

Cranking hold function has been adopted. Once the ignition switch is turned to the START position, this control continues to operate the starter until the engine starts.
The basic construction and operation are same as ‘03 Land Cruiser. For details refer to page 144.

Segment Conductor type alternator has been adopted.

To comply with the OBD-II (On-Board Diagnosis II) regulations, all the DTC (Diagnostic Trouble Code) have been made to correspond to the SAE controlled codes. Some of the DTC have been further divided into smaller detection areas than in the past, and new DTC have been assigned to them. For details, refer to 2003 General Features section.

▲ Engine Specifications ◀

Model			‘03 Model	‘02 Model
No. of Cyls. & Arrangement			8-Cylinder, V Type	←
Valve Mechanism			32-Valve DOHC, Belt & Gear Drive	←
Combustion Chamber			Pentroof Type	←
Manifolds			Cross-Flow	←
Fuel System			SFI	←
Ignition System			DIS	←
Displacement cm^3 (cu. in.)			4664 (284.5)	←
Bore × Stroke mm (in.)			94.0 × 84.0 (3.70 × 3.31)	←
Compression Ratio			9.6 : 1	←
Max. Output SAE-NET			179 kW @ 4800 rpm 240 HP @ 4800 rpm	183/179* kW @ 4800 rpm 245/240* HP @ 4800 rpm
Max. Torque SAE-NET			427 N·m @ 3400 rpm 315 ft lbf @ 3400 rpm	←
Valve Timing	Intake	Open	3° BTDC	←
		Close	36° ABDC	←
	Exhaust	Open	46° BBDC	←
		Close	3° ATDC	←
Firing Order			1-8-4-3-6-5-7-2	←
Research Octane Number			91 or more	←
Emission Regulation			SFTP and ULEV	—
Oil Grade			API SL-EC or ILSAC	←
Engine Service Mass kg (lb)			223 (492)	←

*: California Specification Model

2. Major Difference

Item	Outline
Intake and Exhaust System (See Page 247)	• Adoption of a carbon filter for adsorbing HC (hydrocarbons) in the air cleaner cap • Adoption of the link-less type ETCS-i • Changed composition of TWC
Fuel System (See Page 248)	• Adoption of fuel hoses made of conductive multilayer nylon. • Adoption of the quick turn type fuel cap • Changed location of the charcoal canister and charcoal canister capacity • Changed evaporative emission control system
Charging System (See Page 249)	Adoption of the Segment Conductor type alternator.
Engine Control System (See Page 250)	• Adoption of the no-contact type throttle position sensor and accelerator pedal position sensor. • Provision of accelerator pedal position sensor on accelerator pedal • Changed fuel cut control. • Adoption of the cranking hold function • Changed evaporative emission control • Changed failsafe control of accelerator pedal position sensor and throttle position sensor • Correspondence of all DTC (Diagnostic Trouble Code) to SAE-controlled codes
Other	Configuration and structure are the same as ’02 model

3. Intake and Exhaust System

Air Cleaner

A carbon filter, which adsorbs the HC (hydrocarbons) that remain in the intake system when the engine is stopped, has been adopted in the air cleaner cap to reduce evaporative emissions. This filter is maintenance-free

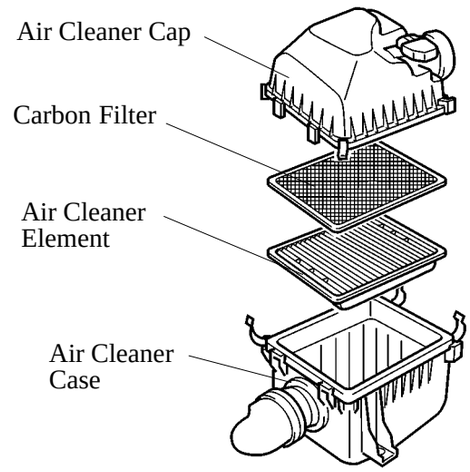

228TU18

Throttle Body

The link-less type ETCS-i has adopted and it realizes excellent throttle control. For details of ETCS-i control, refer to see page 256.

The no-contact type throttle position sensor has been adopted.

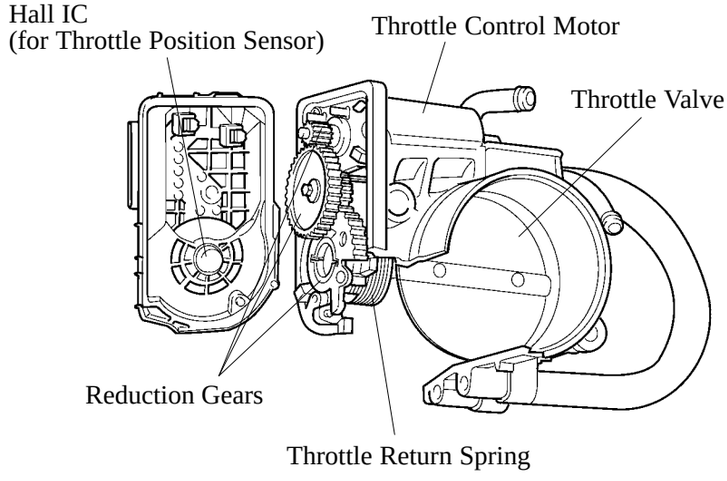

229LC108

TWC (Three-Way Catalytic Converter)

On the ’03 model, the configuration of the TWC has been changed as shown in the table below to improve its exhaust gas reduction performance and comply with the SFTP and ULEV requirements.

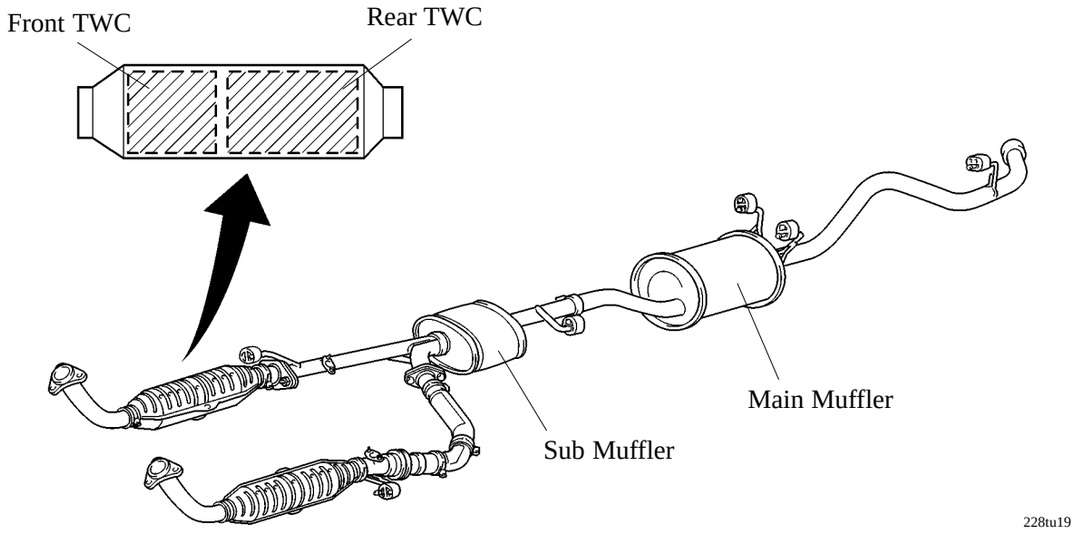

▲ Specifications ◀

Location	’03 Model				’02 Model			
	Cell Density	Volume		Material	Cell Density	Volume		Material
Front	62 cells / cm^2 (400 cells / $in.^2$)	875 cm^3 (53.4 cu in.)	×2	Ceramic	62 cells / cm^2 (400 cells / $in.^2$)	863 cm^3 (52.7 cu in.)	×2	Metal
Rear	62 cells / cm^2 (400 cells / $in.^2$)	1083 cm^3 (66.1 cu in.)	×2	Ceramic	62 cells / cm^2 (400 cells / $in.^2$)	1306 cm^3 (79.7 cu in.)	×1*	Ceramic

*: Only for California Specification Model

4. Fuel System

To reduce evaporative emissions, the following features have been adopted in the fuel system:

Fuel hoses that are made of conductive multilayer nylon, which excel in inhibiting fuel permeation, have been adopted.

A quick-turn type fuel cap has been adopted to prevent the user from leaving the fuel cap untightened.

In conjunction with changing the method for detecting evaporative emission leaks, the location of the charcoal canister has been changed from the previous engine compartment to the under floor.

The capacity of the charcoal canister has been increased.

▲ Charcoal Canister Capacity ◀

’03 Model	’02 Model
3.0 liters (3.17 US qts, 2.64 Imp. qts)	2.4 liters (2.54 US qts, 2.11 Imp. qts)

5. Charging System

A compact and lightweight Segment Conductor type alternator that generates high amperage output in a highly efficient manner has been adopted.

The basic construction and operation are same as ’03 Land Cruiser. For details, refer to page 128.

▲ Specifications ◀

Model	’03 Model		’02 Model
	Standard	Option	Standard
Type	SE08	SC1	L3BME
Output	80A	130A	100A
Length	134 mm (5.28 in.)	132 mm (5.20 in.)	148 mm (5.83 in.)
Weight	4250 g (9.37 lb.)	5600 g (12.35 lb.)	6100 g (13.45 lb.)

6. Engine Control System

General

The engine control system of the 2UZ-FE engine on the ’03 model and 2UZ-FE engine on the ’02 model are compared below.

System	Outline	’03 Model	’02 Model
SFI (Sequential Multiport Fuel Injection)	An L-type SFI system directly detects the intake air mass with a hot wire type mass air flow meter.		
ESA (Electronic Spark Advance)	Ignition timing is determined by the ECM based on signals from various sensors. The ECM corrects ignition timing in response to engine knocking.		
ETCS-i (Electronic Throttle Control System-intelligent) (See page 256)	Optimally controls the throttle valve opening in accordance with the amount of accelerator pedal effort and the condition of the engine and the vehicle.		
	• A link less type is used, without an accelerator cable. • No-contact type accelerator pedal position sensor is provided on the accelerator pedal. • No-contact type throttle position sensor has been adopted.		—
Fuel Pump Control	The fuel pump speed is controlled by the fuel pump relay and the fuel pump resistor.		
	A fuel cut control is adopted to stop the fuel pump when the airbag is deployed at the front collision.		—
Oxygen Sensor Heater Control	Maintains the temperature of the oxygen sensor at an appropriate level to increase accuracy of detection of the oxygen concentration in the exhaust gas.		
Evaporative Emission Control	The ECM controls the purge flow of evaporative emission (HC) in the charcoal canister in accordance with engine conditions.		
	System construction and control logic have been made to comply with LEV-II evaporative emission regulation.		—
Air Conditioning Cut-off Control	By turning the air conditioning compressor ON or OFF in accordance with the engine condition, drivability is maintained.		
Starting System	Once the ignition switch is turned to the START position, this control continues to operate the starter until the engine fires.		—
Diagnosis	When the engine ECU detects a malfunction, the engine ECU diagnoses and memorizes the failed section.		
	All the DTC (Diagnostic Trouble Codes) have been made to correspond to the SAE controlled codes.		—
Fail-Safe (See page 257)	When the engine ECU detects a malfunction, the engine ECU stops or controls the engine according to the data already stored in the memory.		

Construction

The configuration of the engine control system of the 2UZ-FE engine is as shown in the following chart.

: New

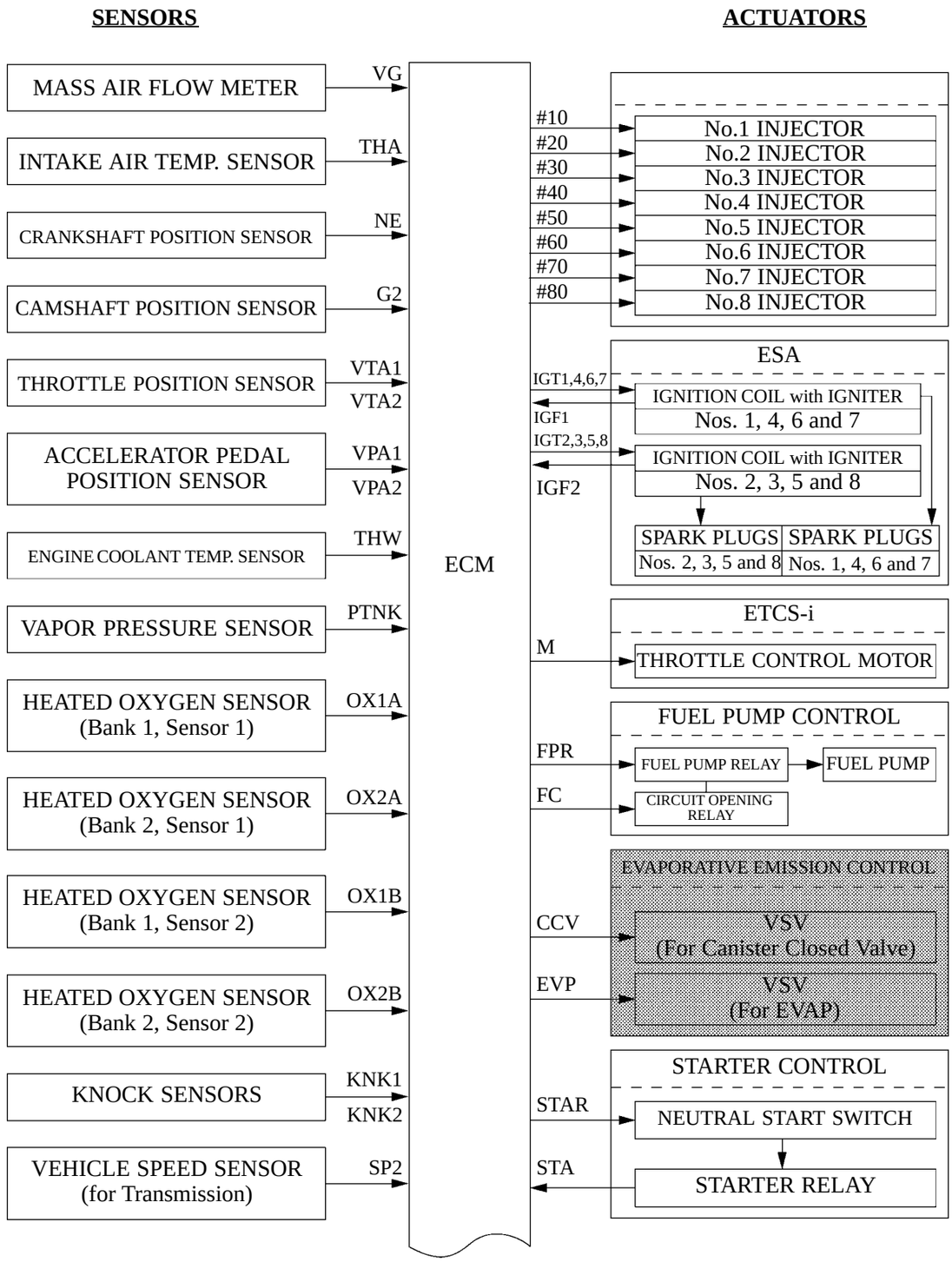

(Continued)

228TU20

10

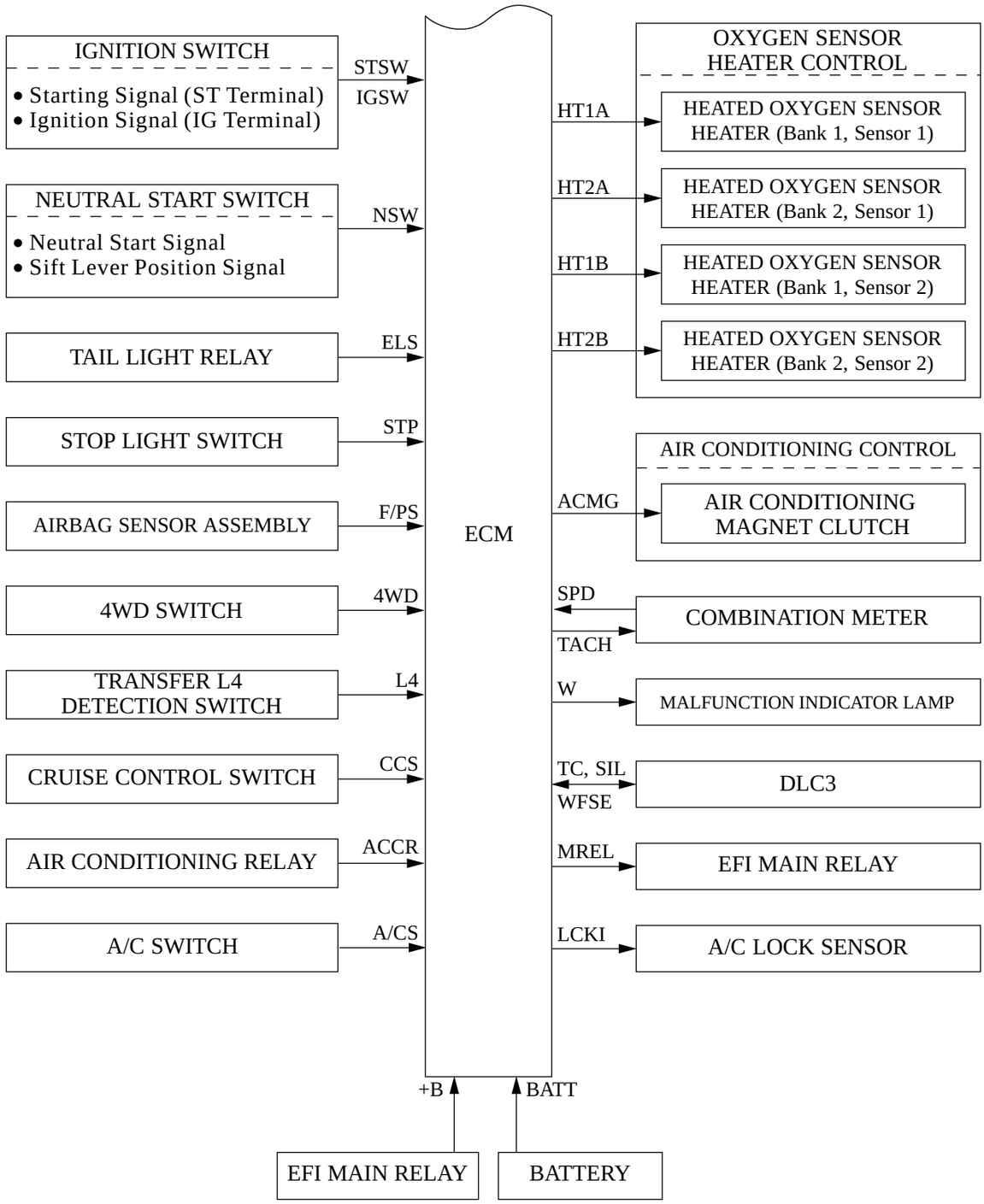
IGNITION SWITCH
• Starting Signal (ST Terminal)
• Ignition Signal (IG Terminal)
STSW
IGSW
NEUTRAL START SWITCH
• Neutral Start Signal
• Sift Lever Position Signal
NSW
TAIL LIGHT RELAY
ELS
STOP LIGHT SWITCH
STP
AIRBAG SENSOR ASSEMBLY
F/PS
4WD SWITCH
4WD
TRANSFER L4 DETECTION SWITCH
L4
CRUISE CONTROL SWITCH
CCS
AIR CONDITIONING RELAY
ACCR
A/C SWITCH
A/CS
ECM
+B
BATT
EFI MAIN RELAY
BATTERY
OXYGEN SENSOR HEATER CONTROL
HT1A
HEATED OXYGEN SENSOR HEATER (Bank 1, Sensor 1)
HT2A
HEATED OXYGEN SENSOR HEATER (Bank 2, Sensor 1)
HT1B
HEATED OXYGEN SENSOR HEATER (Bank 1, Sensor 2)
HT2B
HEATED OXYGEN SENSOR HEATER (Bank 2, Sensor 2)
AIR CONDITIONING CONTROL
ACMG
AIR CONDITIONING MAGNET CLUTCH
SPD
TACH
COMBINATION METER
W
MALFUNCTION INDICATOR LAMP
TC, SIL
WFSE
DLC3
MREL
EFI MAIN RELAY
LCKI
A/C LOCK SENSOR

228TU21

Engine Control System Diagram

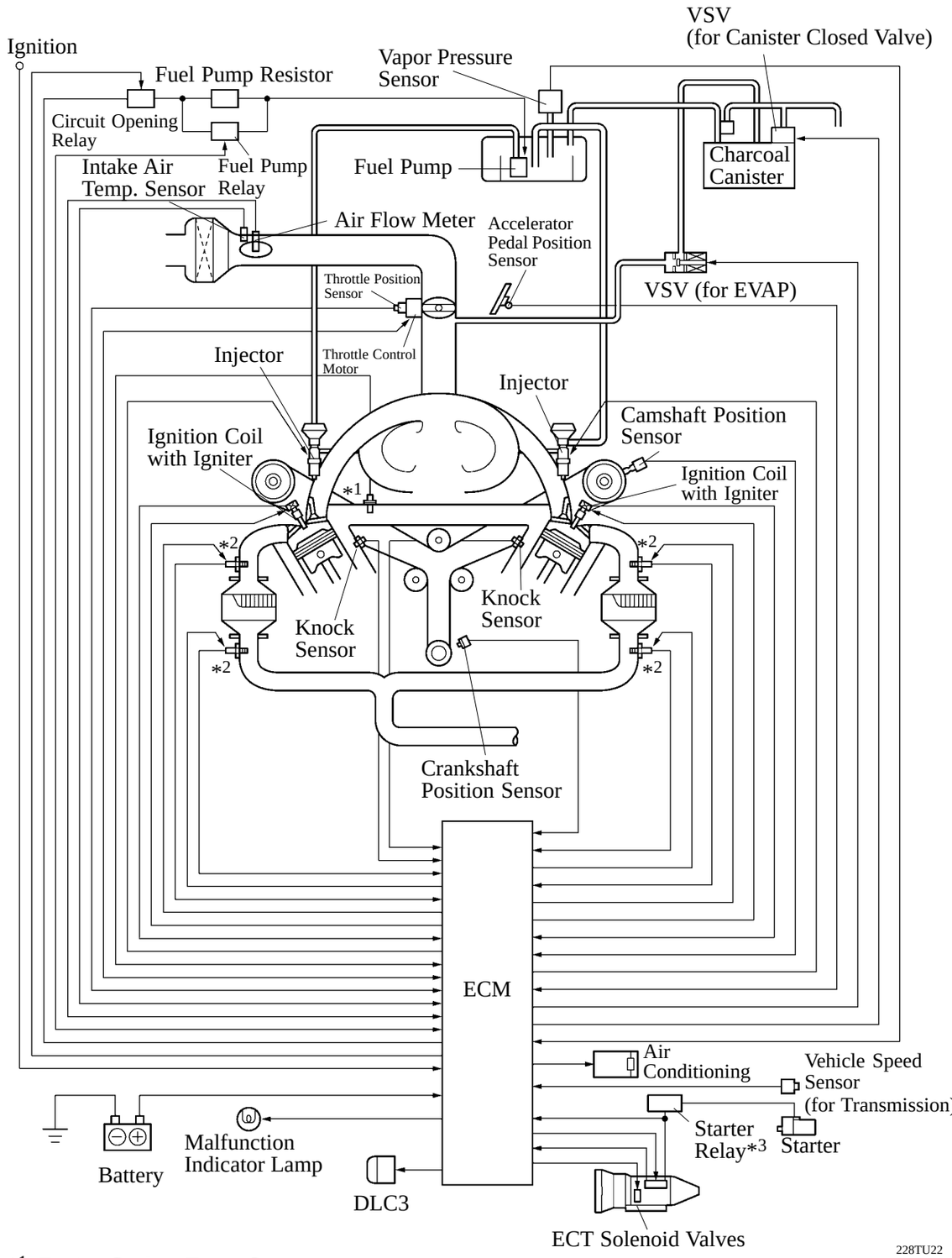

*1: Engine Coolant Temp. Sensor
*2: Heated Oxygen Sensor

10

Main Component of Engine Control System

1) General

The following table compares the main components.

Model Type	’03 Model		’02 Model	
Component	Outline	Quantity	Outline	Quantity
ECM	32-bit CPU	1	←	
Air Flow Meter	Hot-wire Type	1	←	
Crankshaft Position Sensor (Rotor Teeth)	Pick-up Coil Type (36-2)	1	←	
Camshaft Position Sensor (Rotor Teeth)	Pick-up Coil Type (1)	1	←	
Accelerator Pedal Position Sensor	No-contact Type (Mounted on accelerator pedal)	1	Linear Type (Mounted on throttle body)	1
Throttle Position Sensor	No-contact Type	1	Linear Type	1
Knock Sensor	Built-in Piezoelectric Type	2	←	
Oxygen Sensor (Bank 1, Sensor 1) (Bank 1, Sensor 2) (Bank 2, Sensor 1) (Bank 2, Sensor 2)	with Heater	4	←	
Injector	4-Hole Type	8	←	

2) Throttle Position Sensor (No-contact type)

No-contact type throttle position sensor has been adopted. The basic construction and operation are same as ’03 Land Cruiser. For details, refer to page 136.

3) Accelerator Pedal Position Sensor (No-contact type)

The magnetic yoke that is mounted at the base of the accelerator pedal arm rotates around the Hall IC in accordance with the amount of effort that is applied to the accelerator pedal. The Hall IC converts the changes in the magnetic flux that occur at that time into electrical signals, and outputs them in the form of accelerator pedal effort to the ECM.

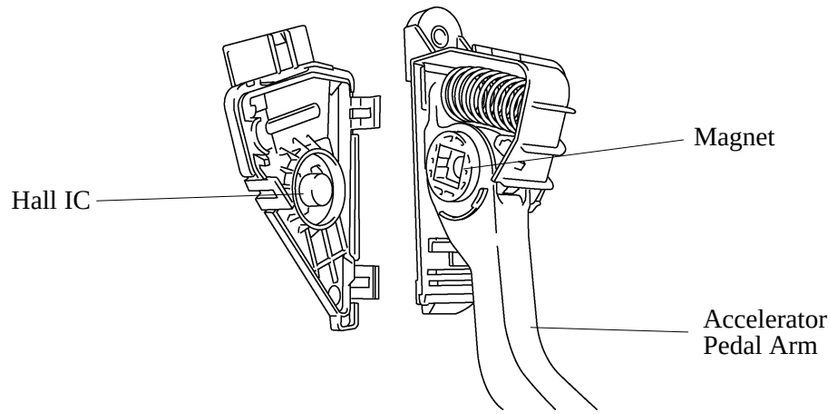

2228TU23

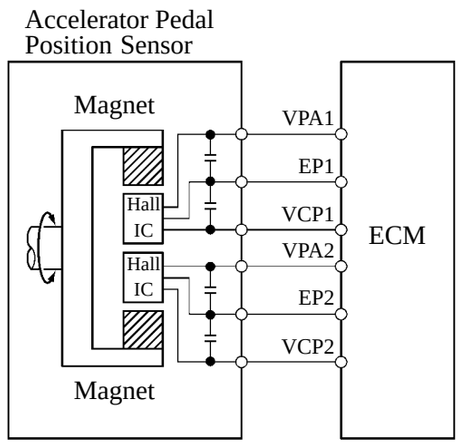

228TU24

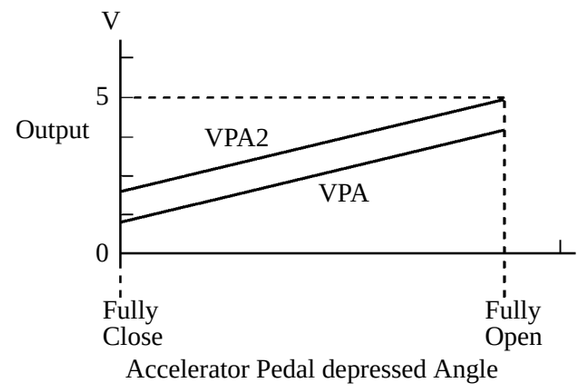

228TU25

Service Tip

The inspection method differs from the conventional accelerator pedal position sensor because this sensor uses a hall IC. For details, refer to the 2003 Toyota Tundra Repair Manual (Pub. No. RM956U).

ETCS-i (Electronic Throttle Control System-intelligent)

In the conventional throttle body, the throttle valve opening is determined invariably by the amount of the accelerator pedal effort. In contrast, the ETCS-i uses the ECM to calculate the optimal throttle valve opening that is appropriate for the respective driving condition and uses a throttle control motor to control the opening.
In contrast to the ETCS-i on the previous model, the following items have been changed on the new model:

The accelerator cable and link have been discontinued, and no-contact type accelerator pedal position sensor has been provided on the accelerator pedal.

No-contact type throttle position sensor has been adopted.

Accordingly, the limp-mode control during the fail-safe mode has been changed.

▲ System Diagram ◀

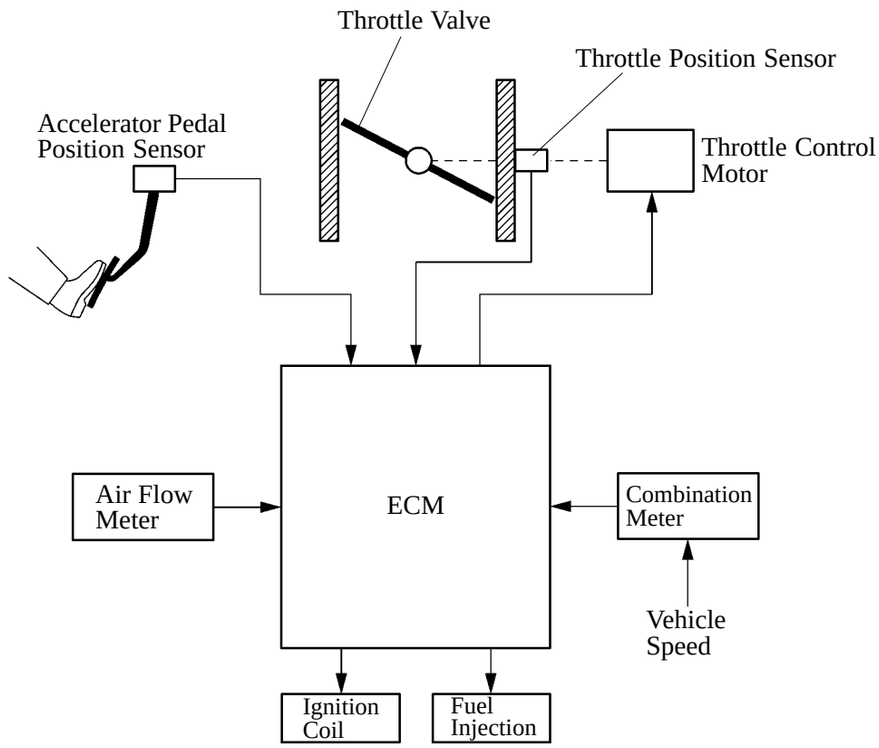

Fail-Safe

When the ECM detects a malfunction, the ECM stops or controls the engine according to the data already stored in the memory.

▲ Fail-Safe Control List ◀

▭: New

Location on Malfunction	Description Control
Air Flow Meter	In case of a signal malfunction, the engine could operate poorly or the catalyst could overheat if the engine continues to be controlled with the signals from the sensors. Therefore, the ECM effects control by using the values in the ECM or stops the engine.
Accelerator Pedal Position Sensor (For details, see page 147)	In case of a signal malfunction, the ECM calculates the accelerator pedal opening angle that is limited by the dual system sensor value and continues effecting throttle valve control. If both system malfunction, the ECM considers that the accelerator pedal is fully closed.
Throttle Position Sensor (For details, see page 148)	In case of a signal malfunction, the ECM cuts off the current to the throttle control motor. The throttle valve returns to the prescribed opening by the force of the return spring. The ECM then adjusts the engine output by controlling the fuel injection and ignition timing in accordance with the accelerator pedal opening angle to enable the vehicle to continue driving.
Water Temp. Sensor and Intake Air Temp. Sensor	In case of a signal malfunction, the use of the values from the sensors will make the air-fuel ratio become too rich or too lean, which could causes the engine to stall or to run poorly during cold operation. Therefore, the ECM fixes the air-fuel ratio to the stoichiometric ratio and uses the constant values of 80°C water temperature and 20°C intake air temperature to perform the calculation.
Knock Sensor	In case of a malfunction in the knock sensor or in the knocking signal system (open or short circuit), the engine could become damaged if the timing is advanced despite the presence of knocking. Therefore, if a malfunction is detected in the knock sensor system, the ECM turns the timing retard correction of the knock sensor into the maximum retard value.
Ignition Coil (with Igniter)	In case of a malfunction in the ignition system, such as an open circuit in the ignition coil, the catalyst could be become overheated due to engine misfire. Therefore, if the (IGF) ignition signal is not input twice or more in a row, the ECM determines that a malfunction occurred in the ignition system and stops only the injection of fuel into the cylinder with the malfunction.

■5VZ-FE ENGINE

1. General

The composition of the TWC (Three-Way Catalytic Converter) has been changed to comply with the LEV (Low Emission Vehicle) and SFTP (Supplementary Federal Test Procedure) emission regulations.

The construction and operation of the evaporative emission control system have been changed to comply with the LEV-II (Low Emission Vehicle-II) evaporative emission regulations.

The ’03 model uses the same link type ETCS-i (Electronic Throttle Control System-intelligent) that is used on the ’02 model with the 2UZ-FE engine.

Segment Conductor type alternator has been adopted.

To comply with the OBD-II (On-Board Diagnosis II) regulations, all the DTC (Diagnostic Trouble Code) have been made to correspond to the SAE controlled codes. Some of the DTC have been further divided into smaller detection areas than in the past, and new DTC have been assigned to them. For details, refer to 2003 General Features section.

▲ Engine Specifications ◀

Model			‘03 Model	‘02 Model
No. of Cyls. & Arrangement			6-Cylinder, V Type	←
Valve Mechanism			24-Valve DOHC, Belt & Gear Drive	←
Combustion Chamber			Pentroof Type	←
Manifolds			Cross-Flow	←
Fuel System			SFI	←
Ignition System			DIS	←
Displacement cm^3 (cu. in.)			3378 (206.1)	←
Bore × Stroke mm (in.)			93.5 × 82.0 (3.68 × 3.23)	←
Compression Ratio			9.6 : 1	←
Max. Output SAE-NET			142 kW @ 4800 rpm 190 HP @ 4800 rpm	←
Max. Torque SAE-NET			298 N·m @ 3600 rpm 220 ft lbf @ 3600 rpm	←
Valve Timing	Intake	Open	4° BTDC	←
		Close	42° ABDC	←
	Exhaust	Open	46° BBDC	←
		Close	4° ATDC	←
Firing Order			1-2-3-4-5-6	←
Research Octane Number			91 or more	←
Emission Regulation			LEV and SFTP	—
Oil Grade			API SL-EC or ILSAC	←
Engine Service Mass kg (lb)			M/T: 189 (416.7) A/T: 179 (394.6)	←

2. Major Difference

Item	Outline
Engine Proper	The material of the intake and exhaust valve seats has been changed to one that excels in heat resistance.
Intake and Exhaust System (See Page 223)	• Adoption of a carbon filter for adsorbing HC (hydrocarbons) in the air cleaner cap • Adoption of the ETCS-i • Changed composition of TWC
Fuel System (See Page 224)	• Adoption of fuel hoses made of conductive multilayer nylon. • Adoption of the quick turn type fuel cap • Changed location of the charcoal canister and charcoal canister capacity • Changed evaporative emission control system
Charging System (See Page 224)	Adoption of the Segment Conductor type alternator.
Engine Control System (See Page 225)	• Changed engine ECU to 32-bit type • Provided a linear type accelerator pedal position sensor in the throttle body • Changed fuel cut control • Changed evaporative emission control • Addition of failsafe functions related to ETCS-i. • Correspondence of all DTC (Diagnostic Trouble Code) to SAE-controlled codes
Other	Configuration and structure are the same as ’02 model

3. Intake and Exhaust System

Air Cleaner

A carbon filter, which adsorbs the HC (hydrocarbons) that remain in the intake system when the engine is stopped, has been adopted in the air cleaner cap to reduce evaporative emissions. This filter is maintenance-free.

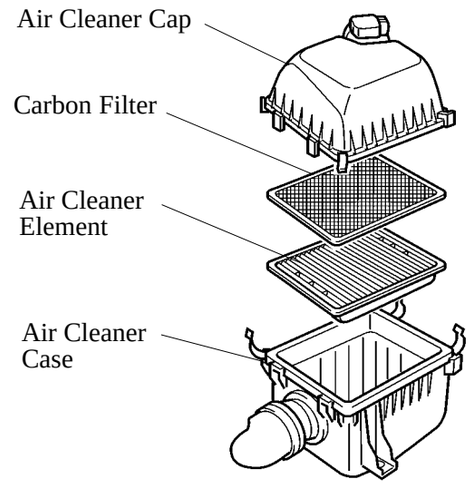

228TU11

Throttle Body

The link type ETCS-i has adopted and it providing excellent throttle control. For details of ETCS-i control, refer to see page 231.

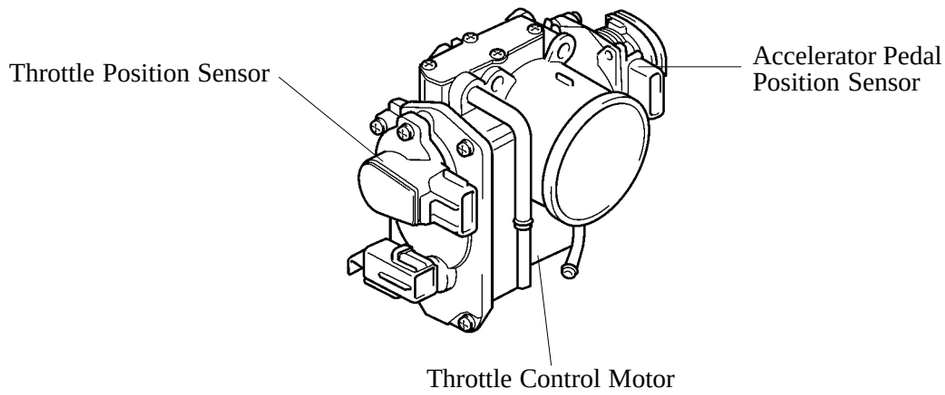

228TU12

TWC (Three-Way Catalytic Converter)

In place of the metallic type front TWC that was used on the ’02 model, the ’03 model has adopted an ultra thin-wall ceramic type front TWC to improve exhaust gas reduction performance and comply with the LEV and SFTP regulations.

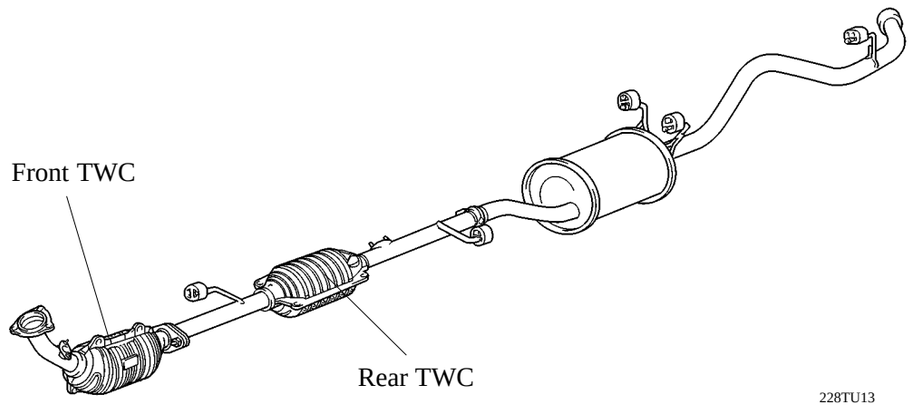

4. Fuel System

To reduce evaporative emissions, the following features have been adopted in the fuel system:

Fuel hoses that are made of conductive multilayer nylon, which excel in inhibiting fuel permeation, have been adopted.

A quick-turn type fuel cap has been adopted to prevent the user from leaving the fuel cap untightened.

In conjunction with changing the method for detecting evaporative emission leaks, the location of the charcoal canister has been changed from the engine compartment to the under floor.

The capacity of the charcoal canister has been increased.

▲ Charcoal Canister Capacity ◀

’03 Model	’02 Model
3.0 liters (3.17 US qts, 2.64 Imp. qts)	2.4 liters (2.54 US qts, 2.11 Imp. qts)

5. Charging System

A compact and lightweight Segment Conductor type alternator that generates high amperage output in a highly efficient manner has been adopted.

The basic construction and operation are same as ’03 Land Cruiser. For details, refer to page 128.

▲ Specifications ◀

Model	’03 Model	’02 Model
Type	SE08	K3BME
Output	80A	80A
Length	134 mm (5.28 in.)	143 mm (5.63 in.)
Weight	4250 g (9.37 lb.)	4850 g (10.69 lb.)

6. Engine Control System

General

The engine control system of the 5VZ-FE engine on the '03 model and 5VZ-FE engine on the '02 model are compared below.

System	Outline	'03 Model	'02 Model
SFI (Sequential Multiport Fuel Injection)	An L-type SFI system directly detects the intake air mass with a hot wire type mass air flow meter.		
ESA (Electronic Spark Advance)	Ignition timing is determined by the ECM based on signals from various sensors. The ECM corrects ignition timing in response to engine knocking.		
IAC (Idle Air Control)	A rotary solenoid type IAC valve controls the fast idle and idle speeds.	—	
ETCS-i (Electronic Throttle Control System-intelligent) (See page 231)	Optimally controls the throttle valve opening in accordance with the amount of accelerator pedal effort and the condition of the engine and the vehicle, and comprehensively controls the ISC, and cruise control.		—
Fuel Pump Control	The fuel pump operation is controlled by signals from the ECM based on the engine speed signal.		
	A fuel cut control is adopted to stop the fuel pump when the airbag is deployed at the front or side collision.		—
Oxygen Sensor/Air Fuel Ratio Sensor Heater Control	Maintains the temperature of the oxygen sensor/air fuel ratio sensor at an appropriate level to increase accuracy of detection of the oxygen concentration in the exhaust gas.		
Evaporative Emission Control (See page 233)	The ECM controls the purge flow of evaporative emission (HC) in the charcoal canister in accordance with engine conditions.		
	System construction and control logic have been made to comply with LEV-II evaporative emission regulation.		—
Air Conditioning Cut-off Control	By turning the air conditioning compressor ON or OFF in accordance with the engine condition, drivability is maintained.		
Diagnosis (See page 243)	When the ECM detects a malfunction, the ECM diagnoses and memorizes the failed section.		
	All the DTC (Diagnostic Trouble Codes) have been made to correspond to the SAE controlled codes.		—
Fail-Safe (See page 243)	When the engine ECU detects a malfunction, the engine ECU stops or controls the engine according to the data already stored in the memory.		

Construction

The configuration of the engine control system of the 5VZ-FE engine is as shown in the following chart.

: New

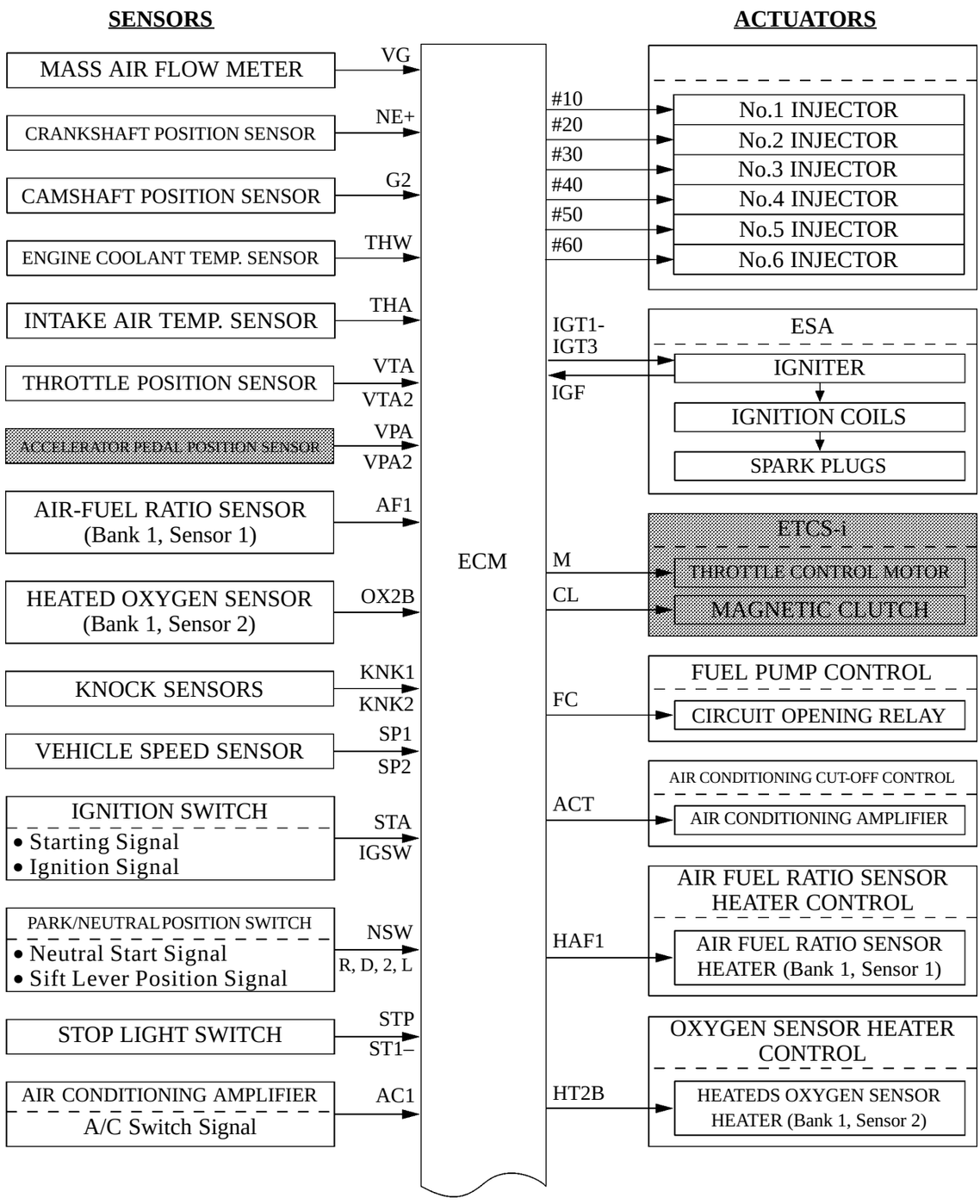

(Continued)

228TU14

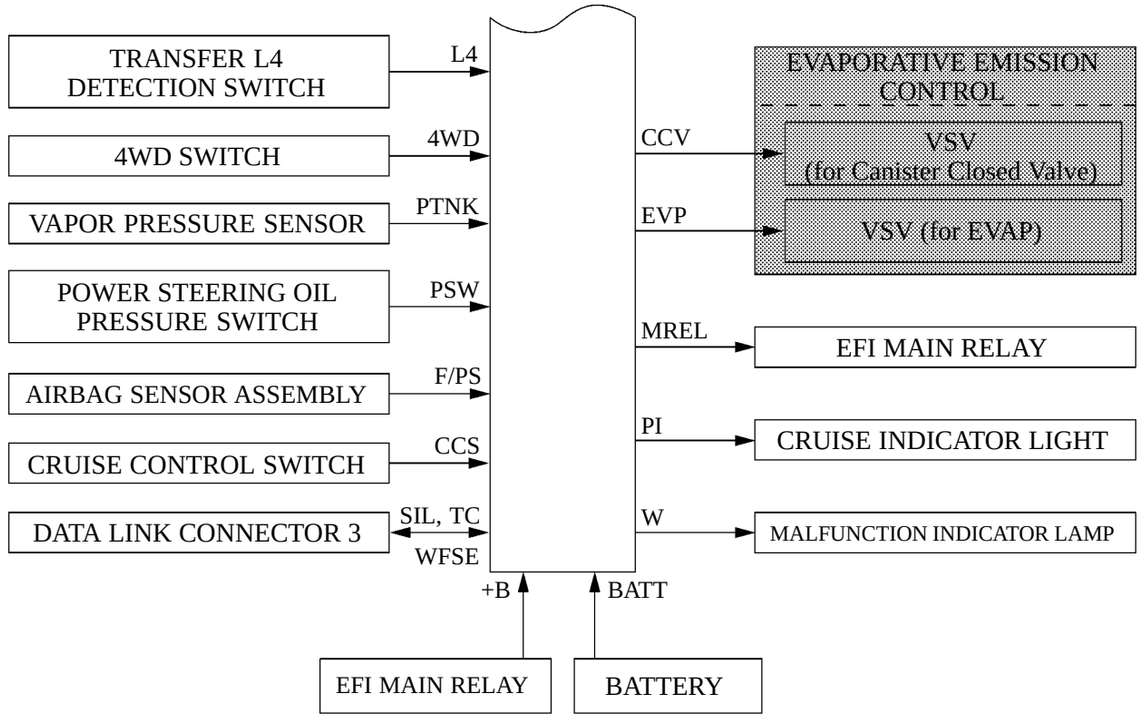
TRANSFER L4 DETECTION SWITCH
L4
4WD SWITCH
4WD
VAPOR PRESSURE SENSOR
PTNK
POWER STEERING OIL PRESSURE SWITCH
PSW
AIRBAG SENSOR ASSEMBLY
F/PS
CRUISE CONTROL SWITCH
CCS
DATA LINK CONNECTOR 3
SIL, TC
WFSE
+B
BATT
EFI MAIN RELAY
BATTERY
CCV
EVP
EVAPORATIVE EMISSION CONTROL
VSV (for Canister Closed Valve)
VSV (for EVAP)
MREL
EFI MAIN RELAY
PI
CRUISE INDICATOR LIGHT
W
MALFUNCTION INDICATOR LAMP

228TU15

Engine Control System Diagram

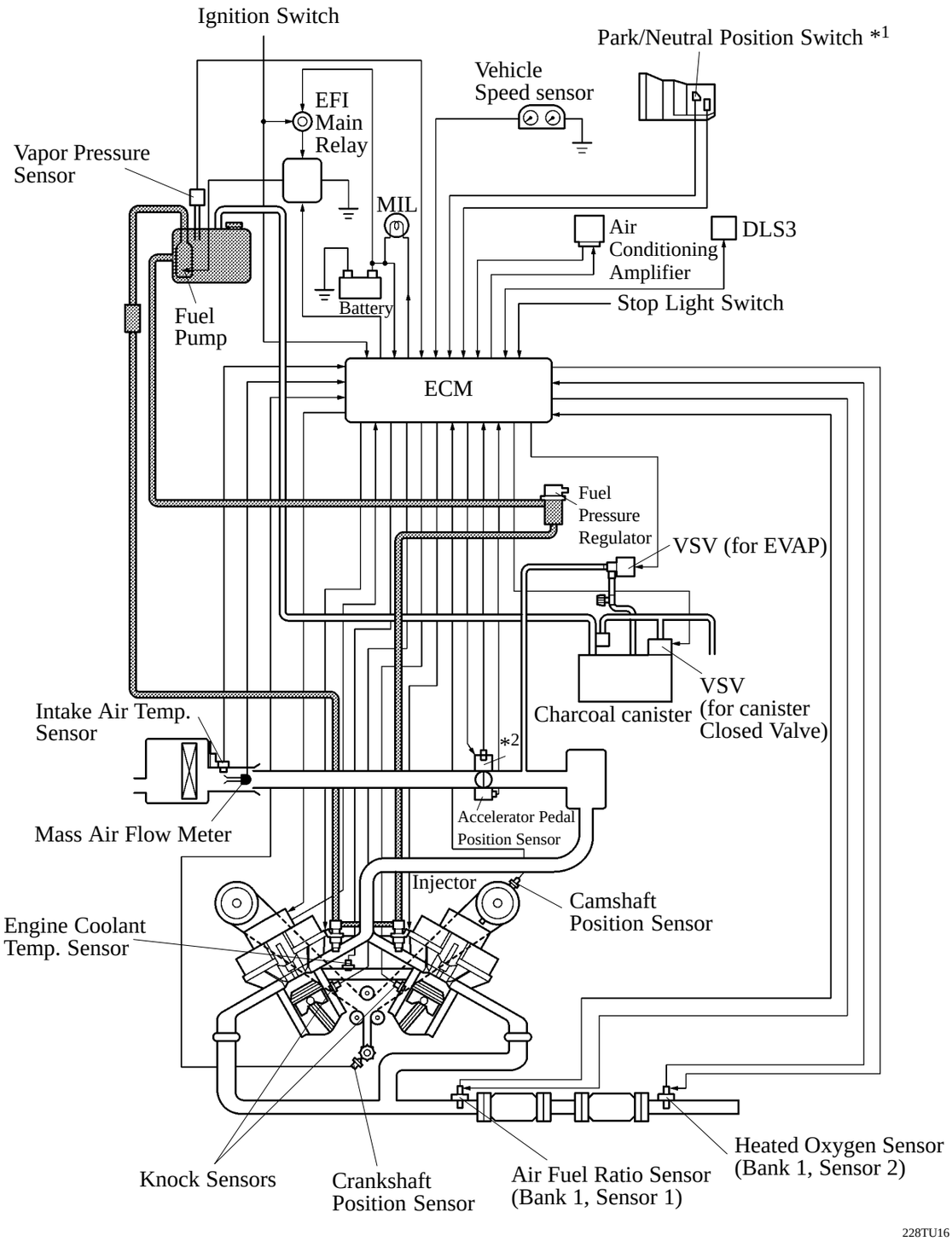

*1: Only for Automatic Transmission Model
*2: Throttle Control Motor and Throttle Position Sensor

Main Component of Engine Control System

1) General

The following table compares the main components.

Model Type	'03 Model		'02 Model	
Component	Outline	Quantity	Outline	Quantity
ECM	32-bit CPU	1	16-bit CPU	1
Air Flow Meter	Hot-wire Type	1	←	
Crankshaft Position Sensor (Rotor Teeth)	Pick-up Coil Type (36-2)	1	←	
Camshaft Position Sensor (Rotor Teeth)	Pick-up Coil Type (1)	1	←	
Accelerator Pedal Position Sensor	Linear Type	1	—	
Throttle Position Sensor	Linear Type	1	←	
Knock Sensor	Built-in Piezoelectric Type	2	←	
Air Fuel Ratio Sensor (Bank 1, Sensor 1)	with Heater	1	←	
Oxygen Sensor (Bank 1, Sensor 2)	with Heater	1	←	
Injector	4-Hole Type	6	←	
IAC Valve	—		Rotary Solenoid Type	1

2) ECM

The 32-bit CPU of the ECM is used to increase the speed for processing the signals.

Service Tip

The length of time to clear the DTC via the battery terminal has been changed from 10 seconds to 1 minute.

3) Accelerator Pedal Position Sensor

The accelerator pedal position sensor, which is mounted on the throttle body, is integrated with the throttle lever, which is connected to the cable that extends from the accelerator pedal.

This sensor converts the throttle valve opening angles into electronic signals with two differing characteristics and outputs them to the ECM. One is the VPA signal that linearly outputs the voltage along the entire range of the throttle valve opening angle. The other is the VPA 2 signal that outputs an offset voltage.

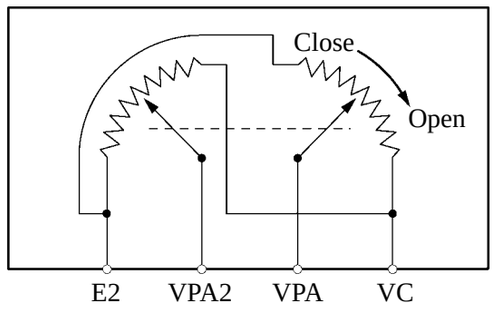

150EG40

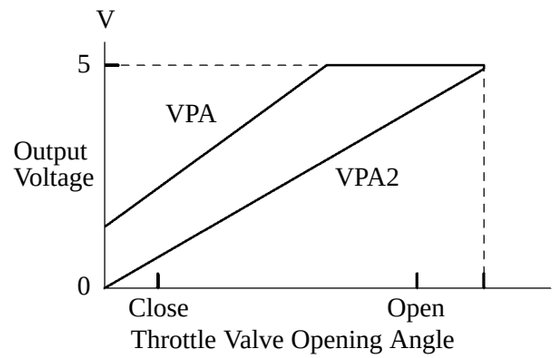

150EG39

ETCS-i (Electronic Throttle Control System-intelligent)

1) General

The ETCS-i system, which provides excellent throttle control in all the operating ranges, has been adopted.

In the conventional throttle body, the throttle valve opening is determined invariably by the amount of the accelerator pedal effort. In contrast, the ETCS-i uses the ECM to calculate the optimal throttle valve opening that is appropriate for the respective driving condition and uses a throttle control motor to control the opening.

The ETCS-i controls the ISC (Idle Speed Control) system and the cruise control system.

A duplicate system is provided to ensure a high level of reliability, and the system shuts off in case of an abnormal condition. Even when the system is shut off, the accelerator pedal can be used to operate the vehicle in the limp mode.

▲ System Diagram ◀

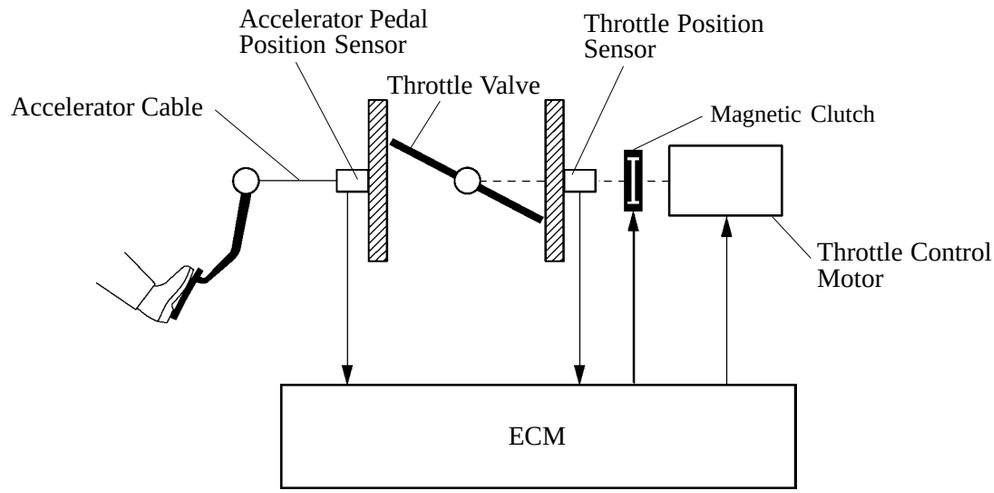

228TU17

2) Operation

The ECM drives the throttle control motor by determining the target throttle valve opening in accordance with the respective operating condition.

Non-Linear Control

Idle Speed Control

Cruise Control

a. Non-Linear Control

Controls the throttle to an optimal throttle valve opening that is appropriate for the driving condition such as the amount of the accelerator pedal effort and the engine speed in order to provide excellent throttle control and comfort in all operating range.

b. Idle Speed Control

Previously, IAC valve was used to perform idle speed control such as fast idle during cold operating conditions and idle-up. In conjunction with the adoption of the ETCS-i, idle speed control is now performed by the throttle control motor, which controls the throttle valve opening.

c. Cruise Control

Previously, the vehicle speed was controlled by the cruise control actuator, which opened and closed the throttle valve. Along with the adoption of the ETCS-i, the vehicle speed is now controlled by the throttle control motor, which controls the throttle valve.

Evaporative Emission Control System

1) General

The construction of the evaporative emission control system has been changed to comply with the LEV-II (Low Emission Vehicle-II) evaporative emission regulation which is belong to CARB (California Air Resources Board). Along with this change, the amount of vapor gas that is discharged outside of the vehicle while the vehicle is parked has been reduced considerably. Because of this construction, which is simpler than the previous, the reliability of the system has been improved.

This system consists primarily of a canister closed valve, purge valve, charcoal canister, vapor pressure sensor, refueling valve, and ECM.

In this system, the ECM monitors the system for malfunctions and outputs DTCs (Diagnostic Trouble Codes) in the event of a malfunction. The detection method is basically the same as the conventional vacuum type that is used on other models. A vacuum is introduced into the system, and the amount of increase in the internal pressure of the fuel tank is monitored in order to detect any leakage in the system.

Listed below are the construction differences between this system and the conventional vacuum type:

a. The air drain valve has been discontinued. The air that has been cleaned through the charcoal canister is discharged through the fresh air line. Accordingly, the fresh air inlet has been moved from the air cleaner to a location near the fuel inlet. Furthermore, the pipe diameter of the fresh air line and the flow rate of the canister closed valve have been increased.

b. An ORVR (Onboard Refueling Vapor Recovery) function has been provided in the refueling valve.

c. A restrictor passage has been provided in the refueling valve to prevent the large amount of vacuum during purge operation or system monitoring operation from affecting the pressure in the fuel tank. As a result of this construction, the pressure switching valve has been discontinued.

d. An air filter* has been added to the fresh air line.

*: The air filter is maintenance-free. If the filter becomes clogged, the ECM will illuminate the MIL (Malfunction Indicator Lamp) and record the DTC number P0446 in its memory.

▲ System Diagram ◀

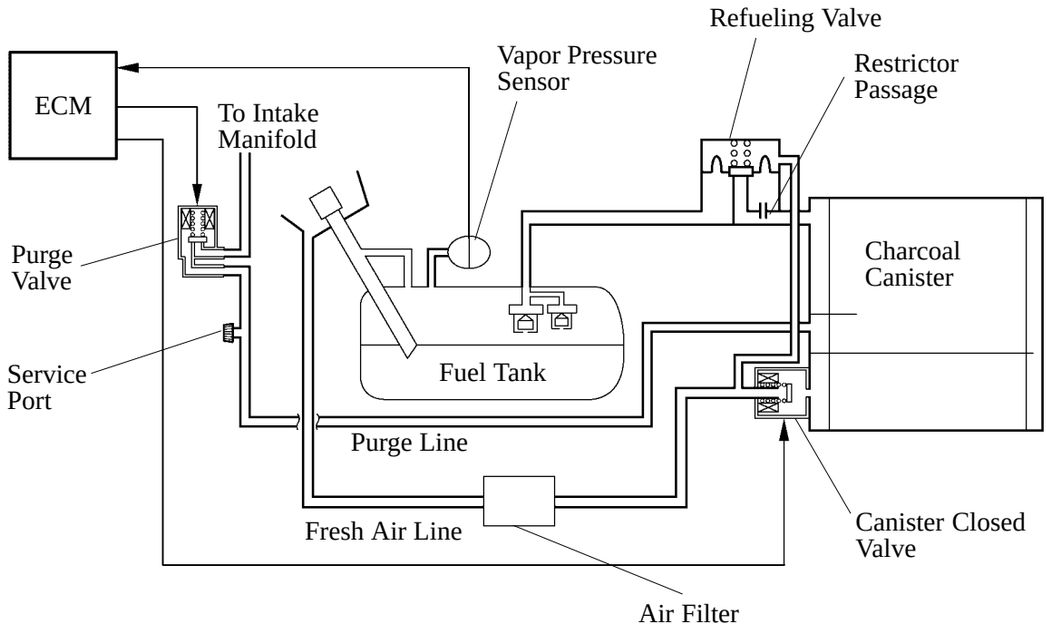

'03 Toyota Tundra

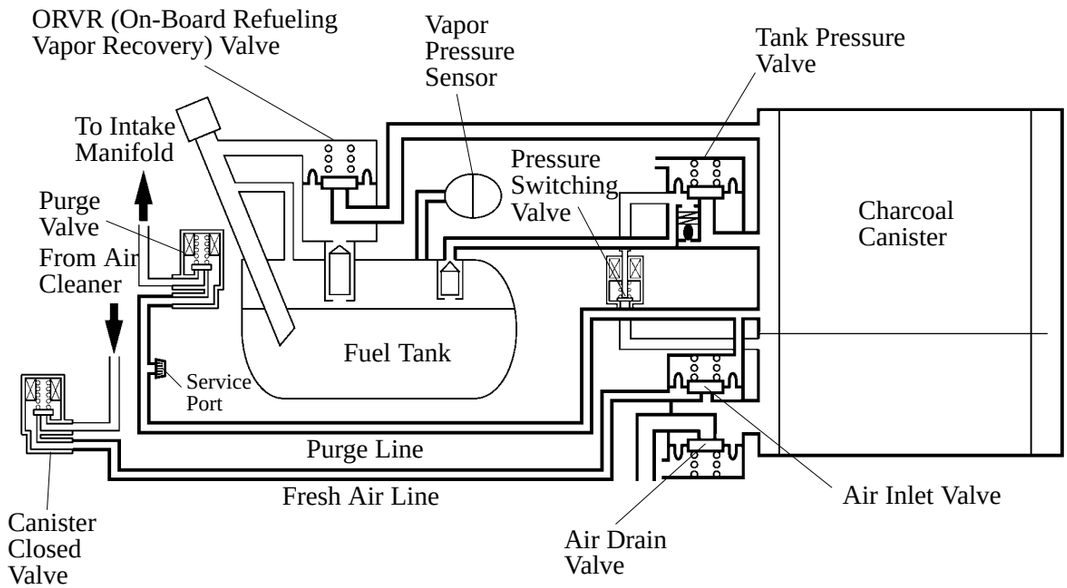

Conventional Vacuum Type

2) Layout of Main Component

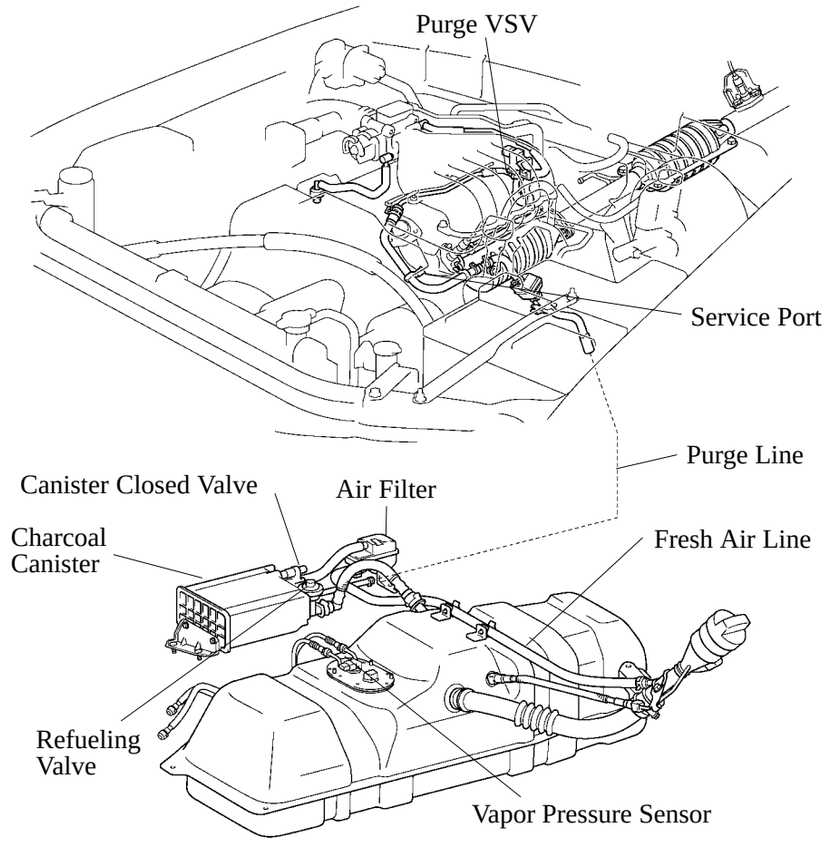

3) Function of Main Component

Components	Function
Canister Closed Valve	Opens and closes the fresh air line in accordance with the signals from the ECM in order to introduce fresh air and control the pressure relief if the internal pressure in the fuel tank increases.
Purge Valve	Opens in accordance with the signals from the ECM when the system is purging, in order to send the vapor gas that was absorbed by the charcoal canister into the intake manifold. During the system monitoring mode, this valve controls the introduction of the vacuum into the fuel tank.
Charcoal Canister	Contains activated charcoal to absorb the vapor gas that is created in the fuel tank.
Vapor Pressure Sensor	Detects the pressure in the fuel tank and sends the signals to the ECM.
Refueling Valve	Controls the flow rate of the vapor gas from the fuel tank to the charcoal canister when the system is purging or during refueling.
Air Filter	Prevents dust and debris in the fresh air from entering the system.
Service Port	This port is used for connecting a vacuum gauge for inspecting the system.
ECM	Controls the canister closed valve and the purge valve in accordance with the signals from various sensors, in order to achieve a purge volume that suits the driving conditions. In addition, the ECM monitors the system for any leakage and outputs a DTC if a malfunction is found.

4) Construction and Operation

a. Refueling Valve

A restrictor passage has been provided in the tank pressure valve. The restrictor passage prevents the large amount of vacuum that is created during purge operation or system monitoring operation from entering the fuel tank, and limits the flow of the vapor gas from the fuel tank to the charcoal canister. If a large volume of vapor gas recirculates into the intake manifold, it will affect the air-fuel ratio control of the engine. Therefore, the role of the restrictor passage is to prevent this from occurring.

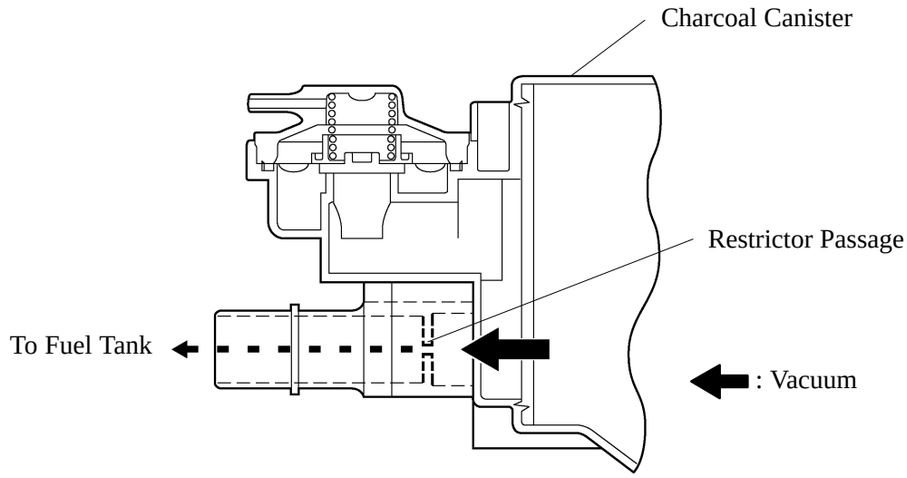

228TU117

b. Fuel Inlet (Fresh Air Inlet)

In accordance with the change of structure of the evaporative emission control system, the location of a fresh air line inlet has been changed from the air cleaner section to near fuel inlet. The flesh air from the atmosphere and drain air cleaned by the charcoal canister will go in and out to the system through the passage shown below.

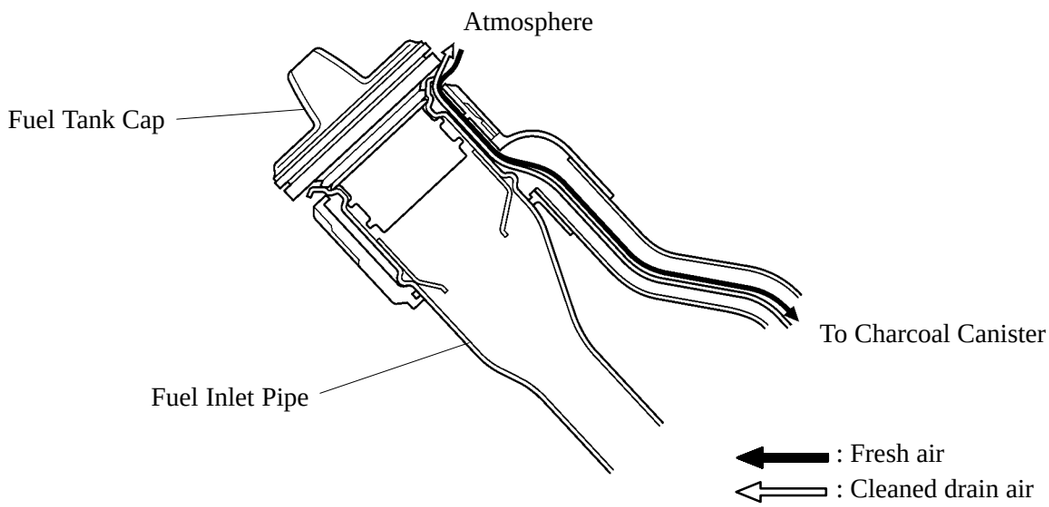

228TU119

5) System Operation

a. Purge Flow Control

When the engine has reached predetermined parameters (closed loop, engine coolant temp. above 75°C (167°F) , etc), stored fuel vapors are purged from the charcoal canister whenever the purge valve is opened by the ECM.
The ECM will change the duty ratio cycle of the purge valve thus controlling purge flow volume. Purge flow volume is determined by intake manifold pressure and the duty ratio cycle of the purge valve. Atmospheric pressure is allowed into the charcoal canister to ensure that purge flow is constantly maintained whenever purge vacuum is applied to the charcoal canister.

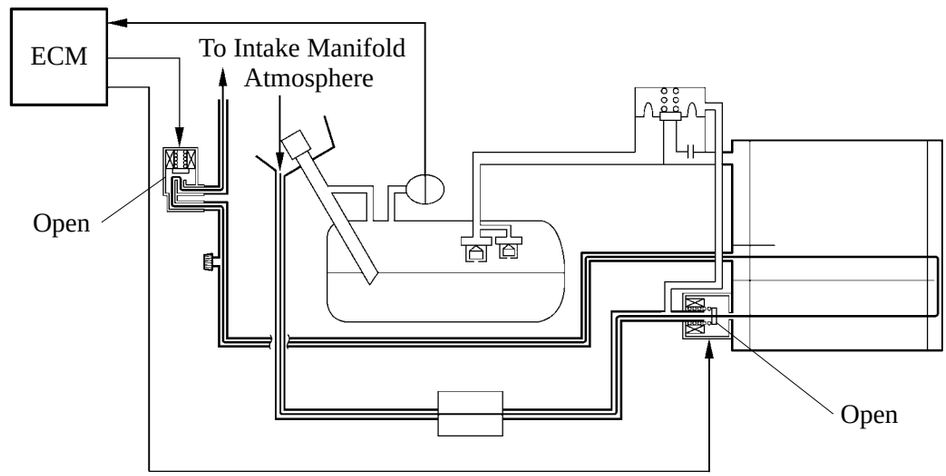

b. ORVR (On-Board Refueling Vapor Recovery)

When the internal pressure of the fuel tank increases during refueling, this pressure causes the diaphragm in the refueling valve to lift up, allowing the fuel vapors to enter the charcoal canister. Because the canister closed valve is always open (even when the engine is stopped) when the system is in a mode other than the monitoring mode, the air that has been cleaned through the charcoal canister is discharged outside of the vehicle via the fresh air line. If the vehicle is refueled during the system monitoring mode, the ECM will recognize the refueling by way of the vapor pressure sensor, which detects the sudden pressure increase in the fuel tank, and will open the canister closed valve.

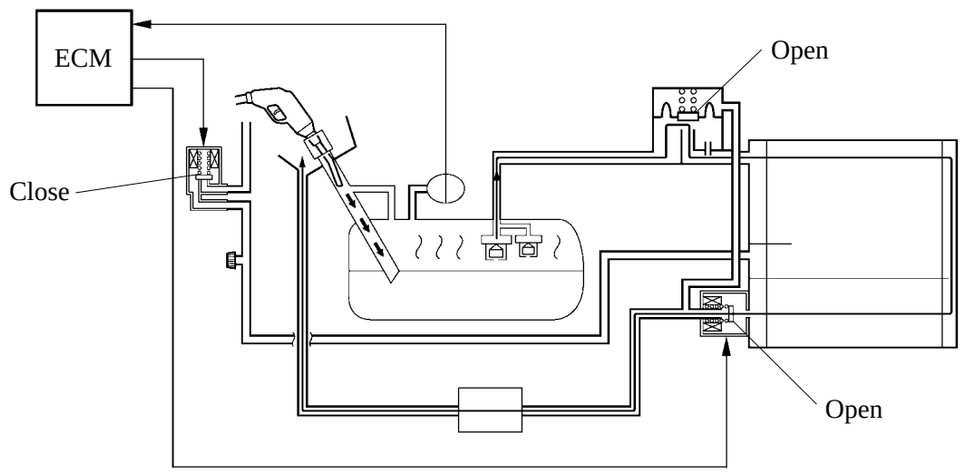

c. System Monitoring

When the initial conditions {low engine temperature (low engine coolant temperature and, engine coolant temperature and intake air temperature being nearly the same) at the engine starting, constant vehicle speed (including idling), and so on.} are met, the ECM introduces a vacuum into the system and monitors the amount of pressure increase in the fuel tank in order to determine if there is any leakage in the system. At the same time, the ECM determines if there is any malfunction in the canister closed valve and the purge valve.

Step1

The ECM opens the purge valve and introduces a vacuum into the fuel tank.

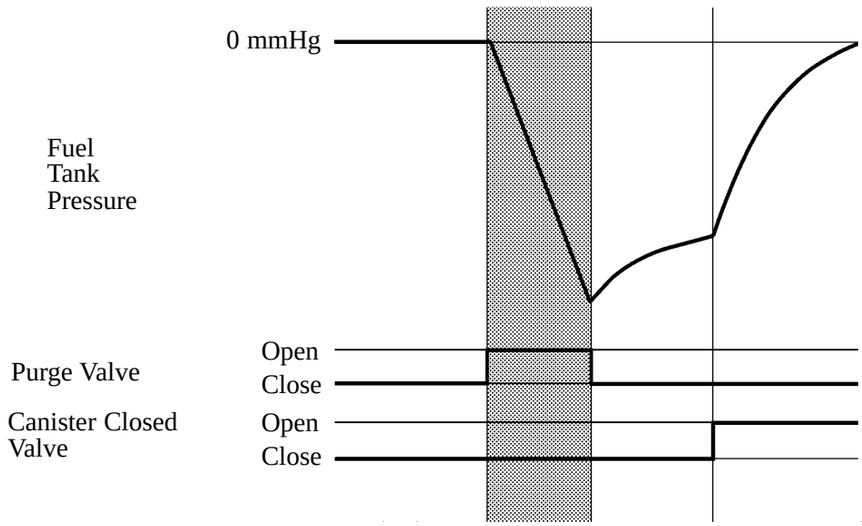

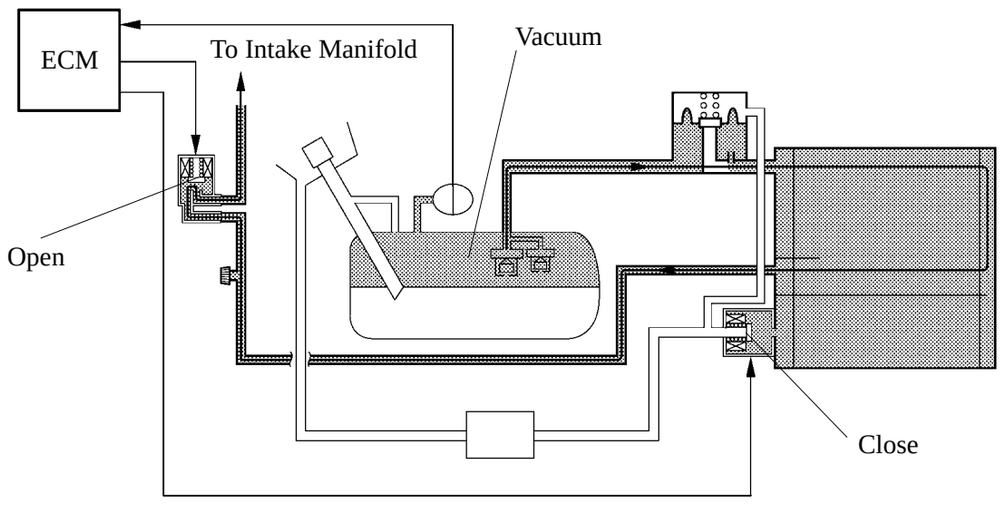

Step2

When the pressure in the fuel tank decreases below value A, the ECM closes the purge valve again. The ECM measures the amount of pressure increase in the tank.

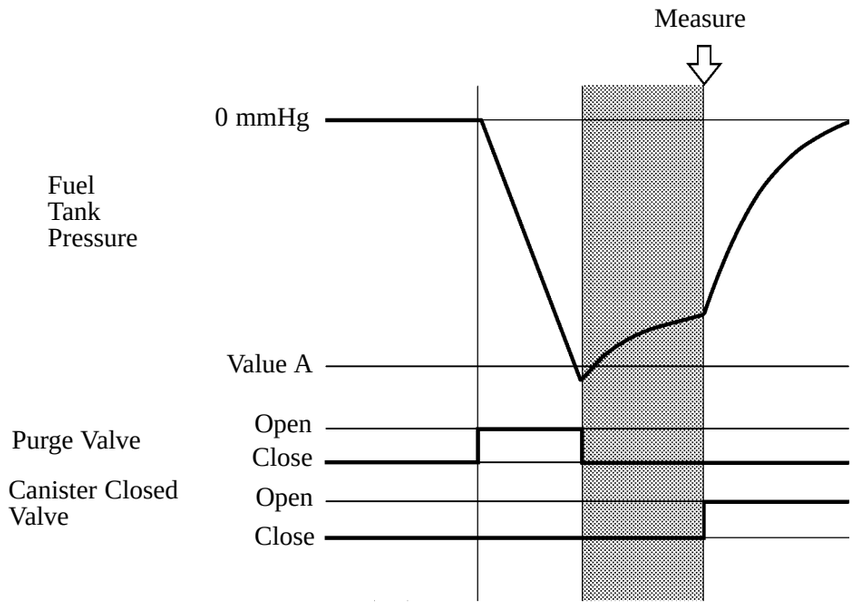

228TU106

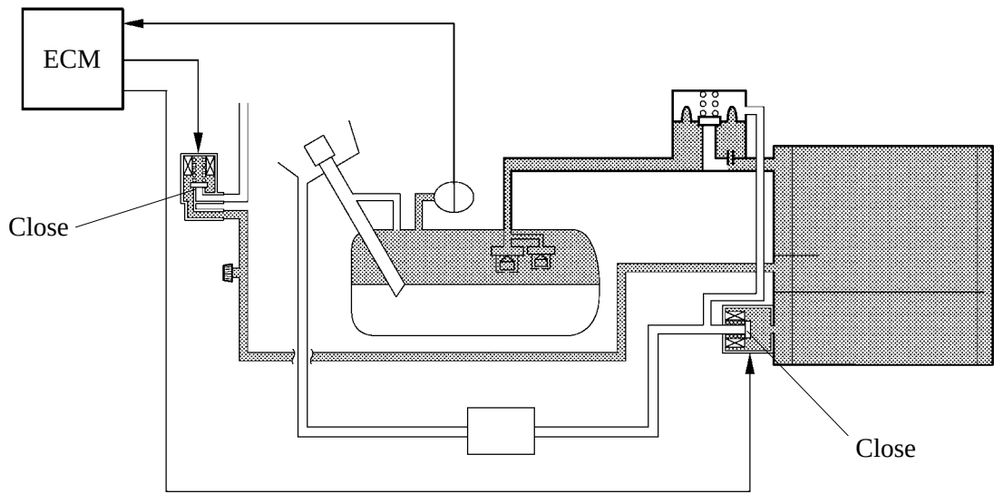

228TU103

System Leak Judgment

The ECM determines whether there is a leakage in the system by the increment amount of fuel tank pressure at Step2 in the previous page. If the increment amount of the fuel tank pressure is greater than the reference value, the ECM judges that there is a system leak.

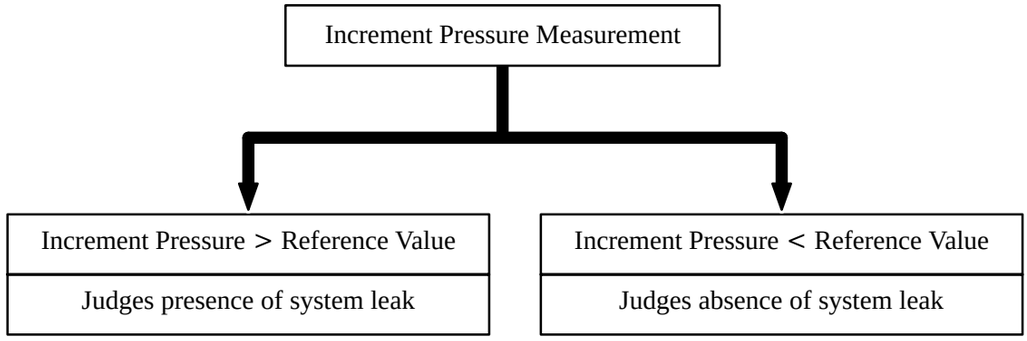

If the ECM judges that there is no system leak, it ends the system monitoring mode and transfers to the normal system control. (Both the purge valve and canister closed valve are opened.)

If the ECM determines that there is a system leak, it illuminates the MIL and stores the following DTCs in its memory:

Level of Leak	DTC
Very small, small or medium leak	P0442 and/or P0456
Large leak	P0441, P0442 and P0446

VSV (Vacuum Switching Valve) Monitoring

i) Normal Condition

a. During purging, the ECM opens the purge valve, and this creates a slight vacuum in the fuel tank.

b. During the system monitoring mode, the ECM opens the purge valve and closes the canister closed valve to introduce a vacuum into the fuel tank.

c. After the ECM has performed a system leak judgment, it opens the canister closed valve to introduce fresh air into the system. As a result, the atmospheric pressure is reinstated rapidly in the fuel tank.

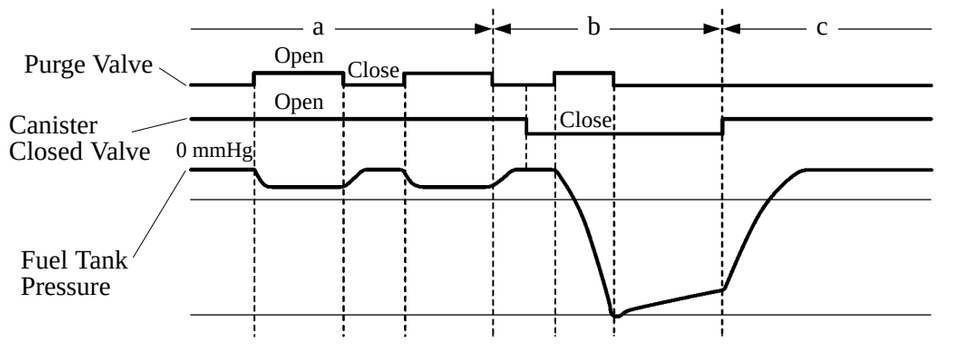

ii) Purge Valve Open Malfunction

a. The fuel tank remains in a constant, slight vacuum state regardless of whether the ECM sends an open or close signal to the purge valve.

b. The pressure in the fuel tank drops rapidly regardless of the close signal that the ECM is sending to the purge valve.

When the ECM detects an open malfunction of the purge valve, it illuminates the MIL and stores the DTC number P0441 in its memory.

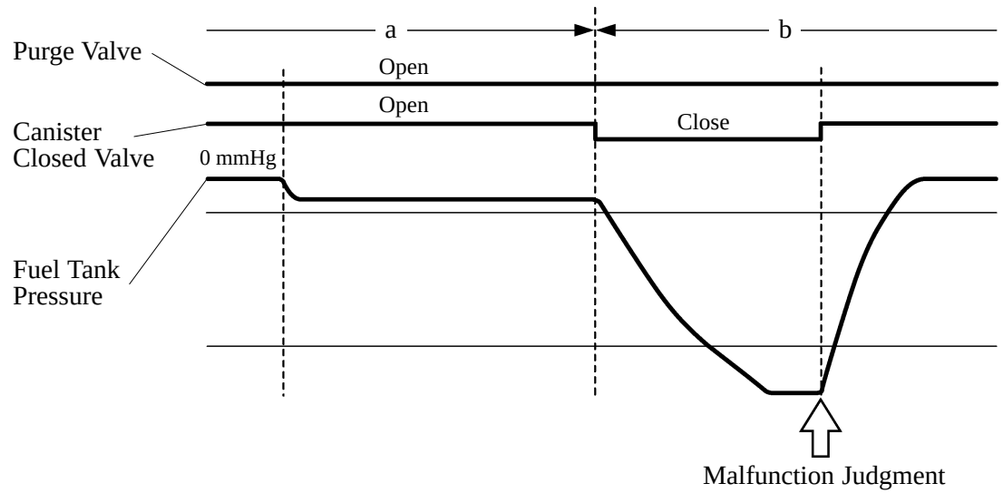

iii) Purge Valve Close Malfunction

a. The pressure in the fuel tank does not change regardless of whether the ECM sends an open or close signal to the purge valve.

b. Even if the ECM closes the canister closed valve in order to transfer to the system monitoring mode, no vacuum is introduced into the fuel tank.

When the ECM detects a close malfunction of the purge valve, it illuminates the MIL and stores the DTC numbers P0441, P0442, and P0446 in its memory.

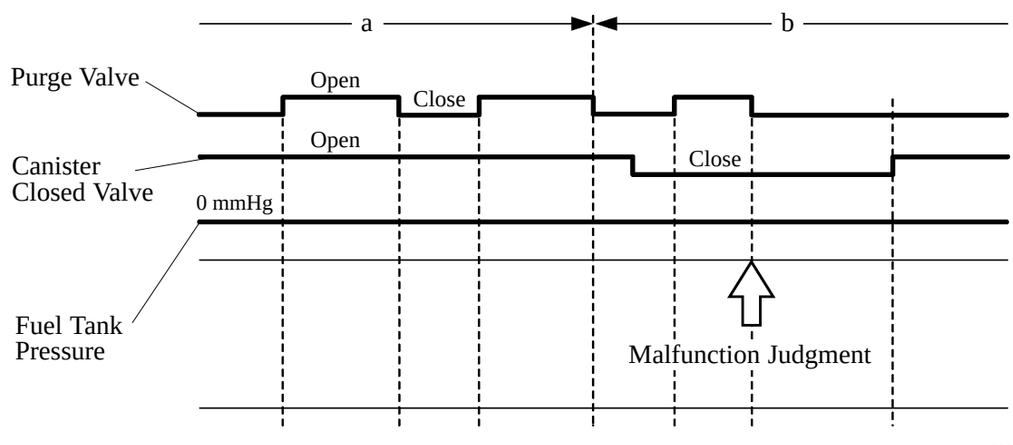

iv) Canister Closed Valve Open Malfunction

a. As the ECM opens the purge valve, a slight vacuum is created in the fuel tank.

b. Even if the ECM sends a close signal to the canister closed valve in order to transfer to the system monitoring mode, it is not possible to completely introduce a vacuum into the fuel tank.

When the ECM detects an open malfunction of the canister close valve, it illuminates the MIL and stores the DTC numbers P0441, P0442, and P0446 in its memory.

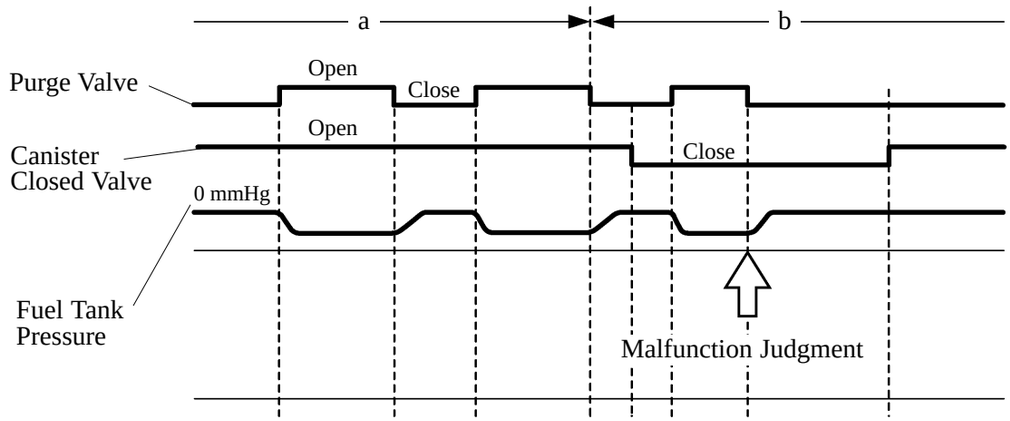

v) Canister Closed Valve Close Malfunction

During purging, a large amount of vacuum is introduced into the fuel tank regardless of the open signal that the ECM sends to the canister closed valve. Even if the purge valve closes, the atmospheric pressure is not reinstated in the fuel tank.

When the ECM detects a close malfunction of the canister close valve, it illuminates the MIL and stores the DTC number P0446 in its memory.

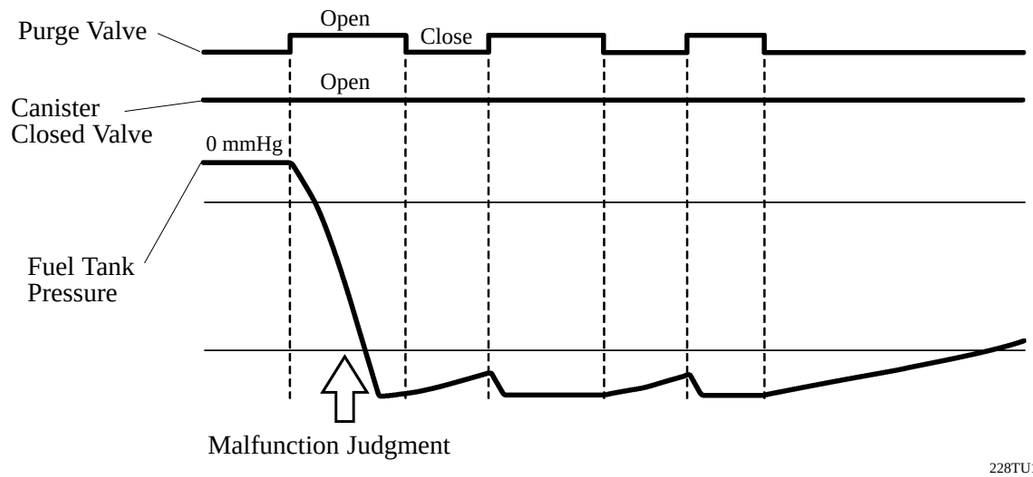

Diagnosis

When the ECM detects a malfunction, the ECM makes a diagnosis and memorizes the failed section. Furthermore, the malfunction indicator lamp in the combination meter illuminates or blinks to inform the driver. The ECM will also store the DTC of the malfunctions. The DTC can be accessed the use of the hand-held tester or SST (09843-18040).

To comply with the OBD-II (On-Board Diagnosis II) regulations, all the DTC (Diagnostic Trouble Code) have been made to correspond to the SAE controlled codes. Some of the DTC have been further divided into smaller detection areas than in the past, and new DTC have been assigned to them. For details, refer to 2003 General Features section.

Fail-Safe

1) General

When the ECM detects a malfunction, the ECM stops or controls the engine according to the data already stored in the memory.

▲ Fail-Safe Control List ◀

▭: New

Location on Malfunction	Description Control
Air Flow Meter	In case of a signal malfunction, the engine could operate poorly or the catalyst could overheat if the engine continues to be controlled with the signals from the sensors. Therefore, the ECM effects control by using the values in the ECM or stops the engine.
Accelerator Pedal/ Throttle Position Sensor	In case of a signal malfunction, the ECM shuts down the power for the throttle control motor and the magnetic clutch, and the throttle valve is fully closed by the return spring. However, the opening angle of the throttle valve can be controlled by the accelerator pedal through the throttle cable.
Water Temp. Sensor and Intake Air Temp. Sensor	In case of a signal malfunction, the use of the values from the sensors will make the air-fuel ratio become too rich or too lean, which could causes the engine to stall or to run poorly during cold operation. Therefore, the ECM fixes the air-fuel ratio to the stoichiometric ratio and uses the constant values of 80°C water temperature and 20°C intake air temperature to perform the calculation.
Knock Sensor	In case of a malfunction in the knock sensor or in the knocking signal system (open or short circuit), the engine could become damaged if the timing is advanced despite the presence of knocking. Therefore, if a malfunction is detected in the knock sensor system, the ECM turns the timing retard correction of the knock sensor into the maximum retard value.
Ignition Coil (with Igniter)	In case of a malfunction in the ignition system, such as an open circuit in the ignition coil, the catalyst could be become overheated due to engine misfire. Therefore, if the (IGF) ignition signal is not input twice or more in a row, the engine ECU determines that a malfunction occurred in the ignition system and stops only the injection of fuel into the cylinder with the malfunction.

2) Fail-Safe of ETCS-i

If an abnormal condition occurs with the ETCS-i, the malfunction indicator lamp illuminates to alert the driver. At the same time, the current to the throttle control motor and magnetic clutch are cut off in order not to operate the ETCS-i. This enables the return spring to close the throttle valve.

Even in this situation, the accelerator pedal can be used to operate the limp mode lever, which operates the throttle valve to enable the vehicle to be driven in the limp mode.

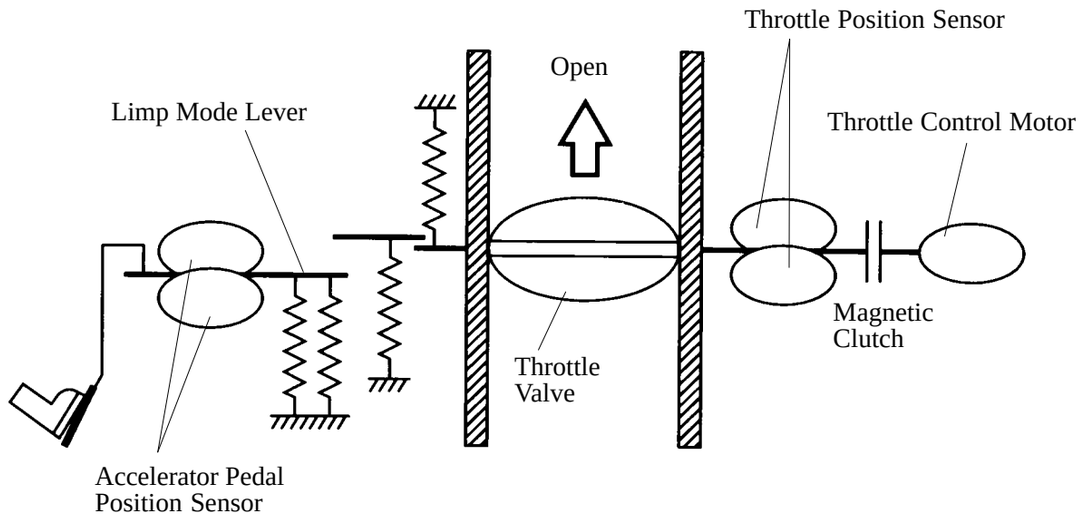

150EG42

■BODY

1. Body Shell

Body vibration has been reduced through the adoption of the following items:

Addition of a reinforcement in the center of the floor cross member

Joining of the floor cross member and the floor reinforcement

Adoption of a floating type No. 2 deck mounts that use rubber mounts (only on the StepSide Bed model)

Adoption of a mass damper below the rear combination (only on the StepSide Bed model)

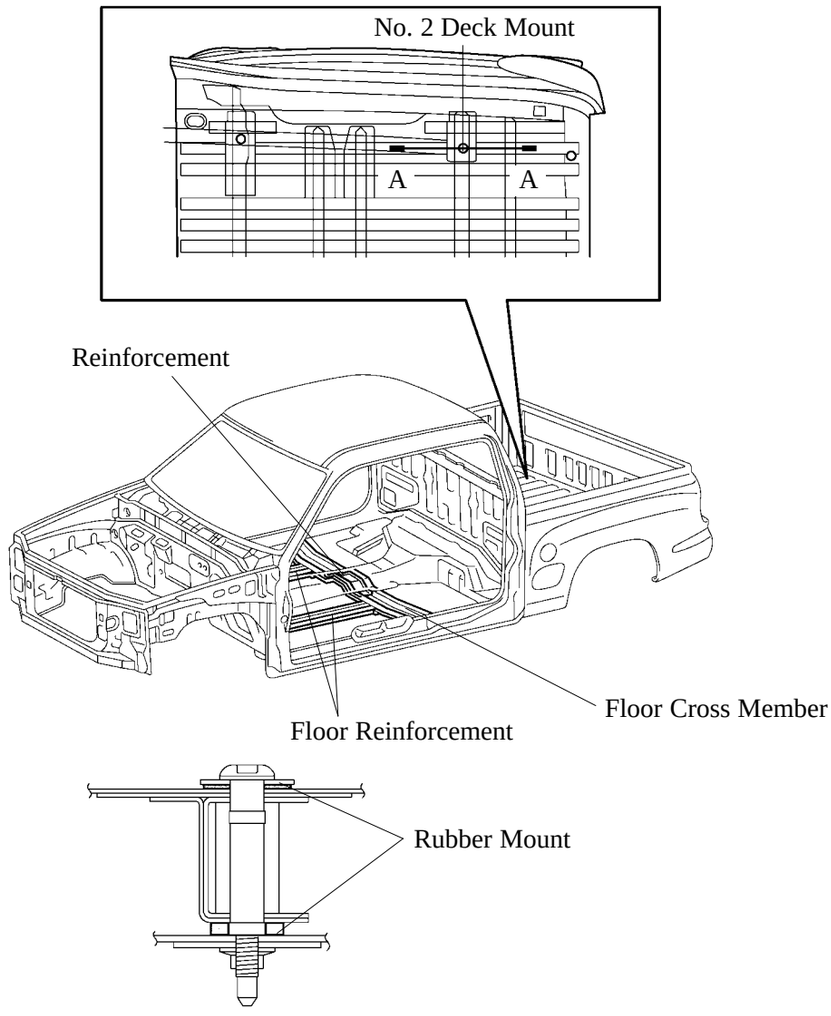

A-A Cross Section

228TU27

▲ Deck Inner Size for StepSide Bed Model ◀

Deck Inner Size		
Length	mm (in.)	1862 (73.3)
Wide	mm (in.)	1367 (53.8)
Height	mm (in.)	485 (19.1)
Volume	m^3 (cu.ft.)	1.23 (43.6)

2. Frame

The characteristics of the No. 3 cab mounts have been optimized to reduce body vibration.

On the models with a plastic bumper, a cross member has been provided at the front end of the frame to ensure body rigidity.

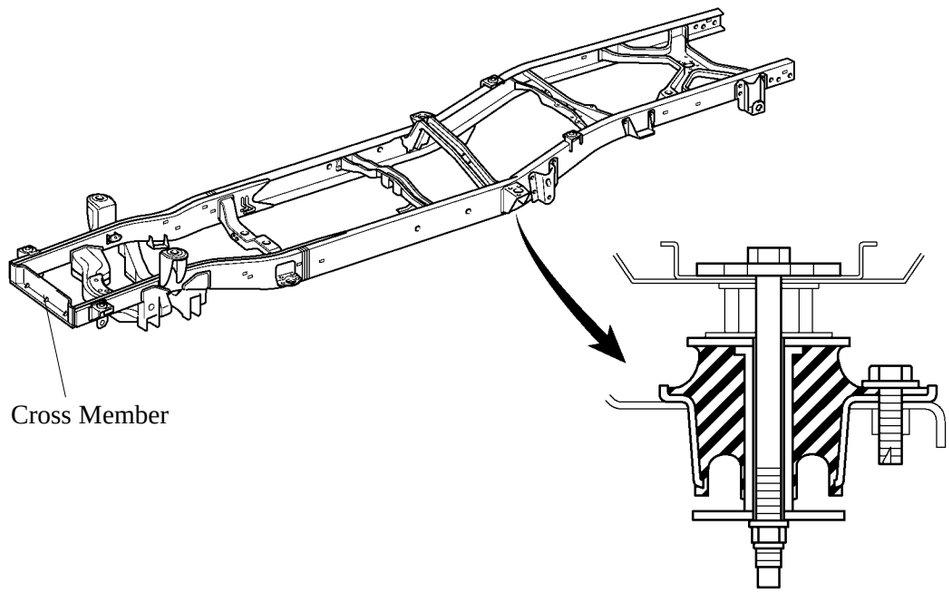

No. 3 Cab Mount

228TU28

NEW FEATURES

◀EXTERIOR

1. Front Design

▲The design with a bulky and dignified appearance has been adopted for the radiator grille and front bumper on all models. Also, for the front bumper, a character line continued from the radiator grille is provided in result of unifying with the radiator grille, thus made the front design give thickness and strength.

▲The front bumper of SR5 grade model has emphasized the unity with the radiator grille by arranging the chrome plated plate for the character line in addition to the above change.

▲For the front bumper side on SR5 and Limited grade models, a bumper extension is provided to make the front bumper have the wideness.

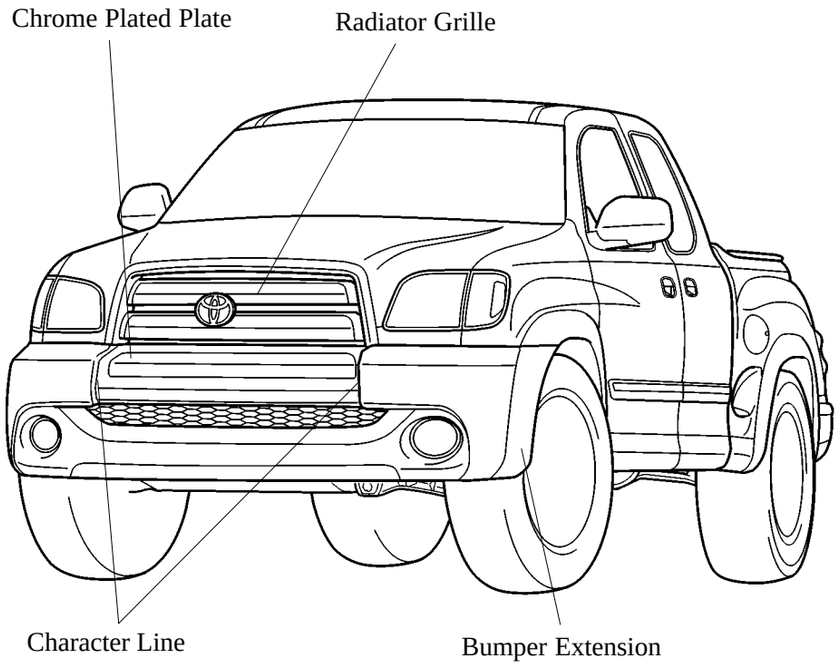

'03 Model 228TU07

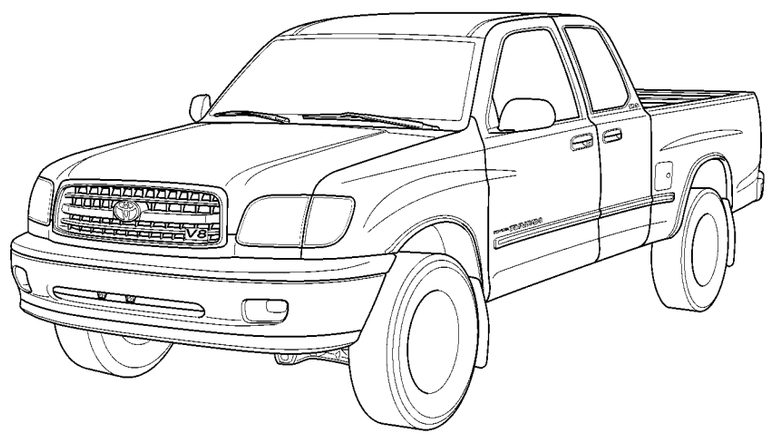

'02 Model 191TU01

2. Rear Design

▲On the StepSide Bed model, a rear body design to round the tailgate from the real flare has been adopted, thus made the design unique and bulky.

▲The rear combination light on the StepSide Bed model has a combination of solid and bulky outer lens shapes and the inner lens with unique cylinder-type shapes, thus expressing sporty image.

▲Models other than the StepSide Bed models have no rear design changes.

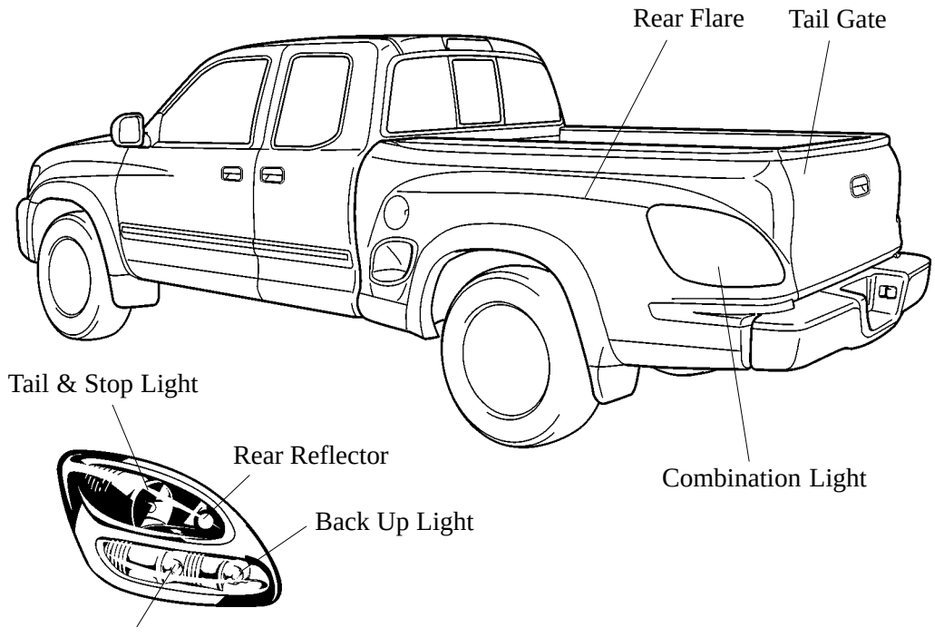

Combination Light

228TU08

StepSide Bed Model

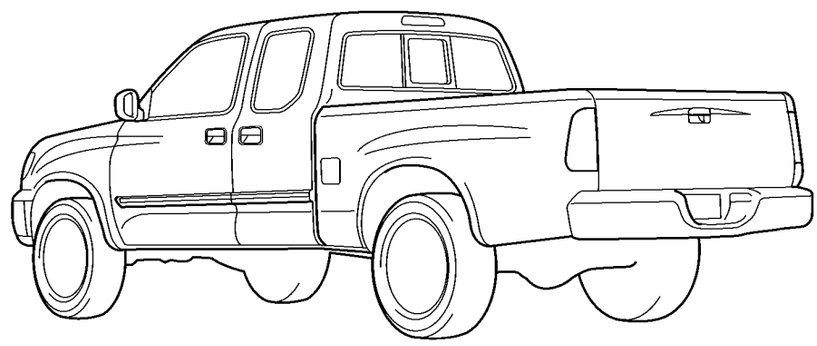

Other Models

228TU09

◀INTERIOR

▲On all models, the design of the center cluster has been changed.

▲For the front console of the Captain Seat model on the Access Cab, the bulky curved design has been adopted for the front and rear consoles, thus making the interior design attractive.

▲For the front console of the Captain Seat model on the Access Cab, a side pockets, center tray and a big-volume (15L) rear console box have been adopted, thus improving the serviceability.

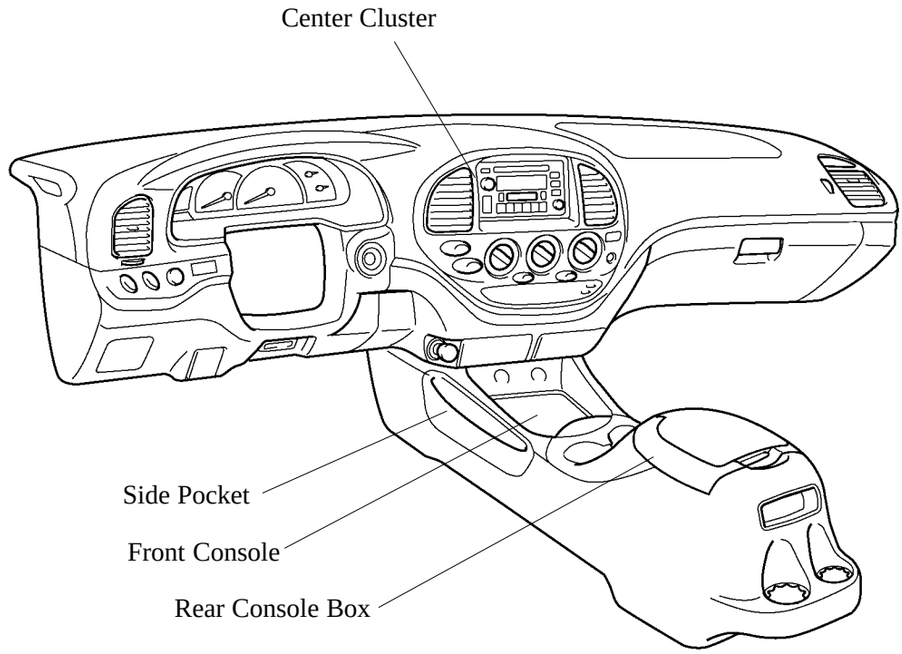

228TU10

Captain Seat Model on Access Cab

MAJOR TECHNICAL SPECIFICATIONS

Item \ Area				U.S.A.			
Body Type				Regular Cab (2WD)		Access Cab (2WD)	
Vehicle Grade				STD		SR5	
Model Code				VCK30L-TRMDKA	VCK30L-TRSDKA	VCK30L-ARMSKA	VCK30L-ARSSKA
Major Dimensions & Vehicle Weights	Overall	Length	mm (in.)	5545 (218.3), 5525 (217.5)*1	5545 (218.3), 5525 (217.5)*1	5545 (218.3), 5525 (217.5)*1	5545 (218.3), 5525 (217.5)*1
		Width	mm (in.)	1910 (75.2)	1910 (75.2)	1910 (75.2)*2, 3	1910 (75.2)*2, 3
		Height*4	mm (in.)	1795 (70.7)	1795 (70.7)	1790 (70.5), 1800 (70.9)*5	1790 (70.5), 1800 (70.9)*5
	Wheel Base		mm (in.)	3260 (128.3)	3260 (128.3)	3260 (128.3)	3260 (128.3)
	Tread	Front	mm (in.)	1680 (66.1)	1680 (66.1)	1680 (66.1)	1680 (66.1)
		Rear	mm (in.)	1648 (64.9)	1648 (64.9)	1648 (64.9)	1648 (64.9)
	Effective Head Room	Front	mm (in.)	1002 (39.4)	1002 (39.4)	1004 (39.5)	1004 (39.5)
		Rear	mm (in.)	—	—	964 (38.0)	964 (38.0)
	Effective Leg Room	Front	mm (in.)	1053 (41.5)	1053 (41.5)	1053 (41.5)	1053 (41.5)
		Rear	mm (in.)	—	—	727 (28.6)	727 (28.6)
	Shoulder Room	Front	mm (in.)	1584 (62.4)	1584 (62.4)	1584 (62.4)	1584 (62.4)
		Rear	mm (in.)	—	—	1609.2 (63.4)	1609.2 (63.4)
	Cargo Space	Length	mm (in.)	—	—	—	—
		Width	mm (in.)	—	—	—	—
		Height	mm (in.)	—	—	—	—
	Overhang	Front	mm (in.)	945 (37.2), 920 (36.2)*1	945 (37.2), 920 (36.2)*1	945 (37.2), 920 (36.2)*1	945 (37.2), 920 (36.2)*1
		Rear	mm (in.)	1225 (48.2)	1225 (48.2)	1225 (48.2)	1225 (48.2)
	Min. Running Ground Clearance		mm (in.)	265 (10.4)	265 (10.4)	270 (10.4)	270 (10.4)
	Angle of Approach		degrees	26°	26°	27°	27°
	Angle of Departure		degrees	23°	23°	23°	23°
	Curb Mass.	Front	kg (lb)	1002 (2210)	1016 (2240)	1023 (2255)	1043 (2300)
		Rear	kg (lb)	778 (1715)	778 (1715)	864 (1905)	864 (1905)
		Total	kg (lb)	1780 (3925)	1794 (3955)	1887 (4160)	1907 (4205)
	Gross Vehicle Mass.	Front	kg (lb)	—	—	—	—
		Rear	kg (lb)	—	—	—	—
		Total	kg (lb)	2495 (5500)	2495 (5500)	2586 (5700)	2586 (5700)
	Fuel Tank Capacity		L (U.S.gal., lmp.gal.)	100 (26.4, 22.0)	100 (26.4, 22.0)	100 (26.4, 22.0)	100 (26.4, 22.0)
	Luggage Compartment Capacity		m^3 (cu.ft.)	—	—	—	—
Performance	Max. Speed		km/h (mph)	165 (102)	165 (102)	165 (102)	165 (102)
	Max. Cruising Speed		km/h (mph)	150 (93)	150 (93)	150 (93)	150 (93)
	Max. Permissible Speed	1st Gear	km/h (mph)	45 (28)	60 (37)	45 (28)	60 (37)
		2nd Gear	km/h (mph)	85 (53)	115 (71)	85 (53)	115 (71)
		3rd Gear	km/h (mph)	125 (78)	—	125 (78)	—
		4th Gear	km/h (mph)	—	—	—	—
	Turning Diameter (Outside Front)	Wall to Wall	m (ft.)	14.2 (46.6)	14.2 (46.6)	14.2 (46.6)	14.2 (46.6)
		Curb to Curb	m (ft.)	13.7 (44.9)	13.7 (44.9)	13.7 (44.9)	13.7 (44.9)
Engine	Engine Type			5VZ-FE	5VZ-FE	5VZ-FE	5VZ-FE
	Valve Mechanism			24-Valve, DOHC	24-Valve, DOHC	24-Valve, DOHC	24-Valve, DOHC
	Bore × Stroke		mm (in.)	93.5 × 82.0 (3.68 × 3.23)	93.5 × 82.0 (3.68 × 3.23)	93.5 × 82.0 (3.68 × 3.23)	93.5 × 82.0 (3.68 × 3.23)
	Displacement		cm^3 (cu.in.)	3378 (206.1)	3378 (206.1)	3378 (206.1)	3378 (206.1)
	Compression Ratio			9.6 : 1	9.6 : 1	9.6 : 1	9.6 : 1
	Carburetor Type			SFI	SFI	SFI	SFI
	Research Octane No.		RON	91 or more	91 or more	91 or more	91 or more
	Max. Output (SAE-NET)		kW/rpm (HP@rpm)	142 / 4800 (190@4800)	142 / 4800 (190@4800)	142 / 4800 (190@4800)	142 / 4800 (190@4800)
	Max. Torque (SAE-NET)		N·m/rpm (lb-ft@rpm)	298 / 3600 (220@3600)	298 / 3600 (220@3600)	298 / 3600 (220@3600)	298 / 3600 (220@3600)
Engine Electrical	Battery Capacity (5HR)		Voltage & Amp. hr.	12 – 48, 12 – 55*8	12 – 48, 12 – 55*8	12 – 48, 12 – 55*8	12 – 48, 12 – 55*8
	Alternator Output		Watts	960	960	960	960
	Starter Output		kW	1.2, 1.4*8	1.4, 1.8*8	1.2, 1.4*8	1.4, 1.8*8
Chassis	Clutch Type			Dry, Single Plate, Diaphragm	—	Dry, Single Plate, Diaphragm	—
	Transmission Type			R150	A340E	R150	A340E
	Transmission Gear Ratio	In First		3.830	2.804	3.830	2.804
		In Second		2.062	1.531	2.062	1.531
		In Third		1.436	1.000	1.436	1.000
		In Fourth		1.000	0.705	1.000	0.705
		In Fifth		0.838	—	0.838	—
		In Reverse		4.220	2.393	4.220	2.393
	Transfer Gear Ratio H4/L4			—	—	—	—
	Differential Gear Ratio (Front/Rear)			— / 4.083	— / 4.083	— / 4.083	— / 4.083
	Differential Gear Size (Front/Rear)		in.	— / 8”	— / 8”	— / 8”	— / 8”
	Brake Type	Front		Ventilated Disc	Ventilated Disc	Ventilated Disc	Ventilated Disc
		Rear		Leading-Trailing Drum	Leading-Trailing Drum	Leading-Trailing Drum	Leading-Trailing Drum
	Parking Brake Type			Leading-Trailing Drum	Leading-Trailing Drum	Leading-Trailing Drum	Leading-Trailing Drum
	Brake Booster Type and Size		in.	Single 10”	Single 10”	Single 10”	Single 10”
	Proportioning Valve Type			LSP and BV	LSP and BV	LSP and BV	LSP and BV
	Suspension Type	Front		Double Wishbone, Coil	Double Wishbone, Coil	Double Wishbone, Coil	Double Wishbone, Coil
		Rear		Rigid Leaf	Rigid Leaf	Rigid Leaf	Rigid Leaf
	Stabilizer Bar	Front		STD	STD	STD	STD
		Rear		—	—	—	—
	Steering Gear Type			Rack and Pinion	Rack and Pinion	Rack and Pinion	Rack and Pinion
	Steering Gear Ratio (Overall)			18.6	18.6	18.6	18.6
	Power Steering Type			Integral Type	Integral Type	Integral Type	Integral Type

*1: With Steel Bumpr
*2: With Wheel Arch Moulding, +35 (1.4)
*3: With Over Fender, +105 (4.1)
*4: Unladen Vehicle
*5: With P265 / 70R16 or P265 / 65R17 tires
*6: Low mode
*7: High mode
*8: Cold Area Spec.
*9: Option
*10: With Off-Road Package

U.S.A.					
Access Cab (4WD)		Access Cab (2WD)			
SR5		SR5	Limited	SR5	Limited
VCK40L-ARMSKA	VCK40L-ARSSKA	UCK30L-ARSSKA	UCK30L-ARSLKA	UCK30L-ASSSKA	UCK30L-ASSLKA
5545 (218.3), 5525 (217.5)*1	5545 (218.3), 5525 (217.5)*1	5545 (218.3), 5525 (217.5)*1	5545 (218.3)	5545 (218.3), 5525 (217.5)*1	5545 (218.3)
1910 (75.2)*2, 3	1910 (75.2)*2, 3	1910 (75.2)*2, 3	2015 (79.3)	2000 (78.7)	2000 (78.7)
1810 (71.3), 1820 (71.7)*5	1810 (71.3), 1820 (71.7)*5	1790 (70.5), 1800 (70.9)*5	1800 (70.9)	1790 (70.5)	1790 (70.5)
3260 (128.3)	3260 (128.3)	3260 (128.3)	3260 (128.3)		
1675 (65.9)	1675 (65.9)	1680 (66.1)	1680 (66.1)	1680 (66.1)	1680 (66.1)
1648 (64.9)	1648 (64.9)	1648 (64.9)	1648 (64.9)	1648 (64.9)	1648 (64.9)
1004 (39.5)	1004 (39.5)	1004 (39.5)	1004 (39.5)	1004 (39.5)	1004 (39.5)
964 (38.0)	964 (38.0)	964 (38.0)	964 (38.0)	964 (38.0)	964 (38.0)
1053 (41.5)	1053 (41.5)	1053 (41.5)	1053 (41.5)	1053 (41.5)	1053 (41.5)
727 (28.6)	727 (28.6)	727 (28.6)	727 (28.6)	727 (28.6)	727 (28.6)
1584 (62.4)	1584 (62.4)	1584 (62.4)	1584 (62.4)	1584 (62.4)	1584 (62.4)
1609.2 (63.4)	1609.2 (63.4)	1609.2 (63.4)	1609.2 (63.4)	1609.2 (63.4)	1609.2 (63.4)
—	—	—	—	—	—
—	—	—	—	—	—
—	—	—	—	—	—
945 (37.2), 920 (36.2)*1	945 (37.2), 920 (36.2)*1	945 (37.2), 920 (36.2)*1	945 (37.2)	945 (37.2), 920 (36.2)*1	945 (37.2)
1225 (48.2)	1225 (48.2)	1225 (48.2)	1225 (48.2)	1225 (48.2)	1225 (48.2)
290 (11.4)	290 (11.4)	265 (10.4)	275 (10.8)	265 (10.4)	265 (10.4)
28°	28°	26°	26°	26°	26°
23°	23°	23°	23°	23°	23°
1125 (2480)	1145 (2525)	1116 (2460)	1120 (2470)	1123 (2475)	1120 (2470)
887 (1955)	887 (1955)	903 (1990)	875 (1930)	916 (2020)	880 (1940)
2012 (4435)	2032 (4480)	2019 (4450)	1995 (4400)	2039 (4495)	2000 (4410)
—	—	—	—		
—	—	—	—		
2722 (6000)	2722 (6000)	2812 (6200)	2812 (6200)	2726 (6010)	2726 (6010)
100 (26.4, 22.0)	100 (26.4, 22.0)	100 (26.4, 22.0)	100 (26.4, 22.0)	100 (26.4, 22.0)	100 (26.4, 22.0)
—	—	—	—	—	—
165 (102)	165 (102)	165 (102)	165 (102)	165 (102)	165 (102)
150 (93)	150 (93)	150 (93)	150 (93)	150 (93)	150 (93)
15 (9)*6 / 45 (28)*7	20 (12)*6 / 60 (37)*7	65 (40)	65 (40)	65 (40)	65 (40)
30 (18)*6 / 85 (53)*7	40 (24)*6 / 110 (68)*7	120 (75)	120 (75)	120 (75)	120 (75)
45 (28)*6 / 125 (78)*7	—	—	—	—	—
—	—	—	—	—	—
14.1 (46.3)	14.1 (46.3)	14.2 (46.6)	14.2 (46.6)	14.2 (46.6)	14.2 (46.6)
13.5 (44.3)	13.5 (44.3)	13.7 (44.9)	13.7 (44.9)	13.7 (44.9)	13.7 (44.9)
5VZ-FE	5VZ-FE	2UZ-FE	2UZ-FE	2UZ-FE	2UZ-FE
24-Valve, DOHC	24-Valve, DOHC	32-Valve, DOHC	32-Valve, DOHC	32-Valve, DOHC	32-Valve, DOHC
93.5 × 82.0 (3.68 × 3.23)	93.5 × 82.0 (3.68 × 3.23)	94.0 × 84.0 (3.70 × 3.31)	94.0 × 84.0 (3.70 × 3.31)	94.0 × 84.0 (3.70 × 3.31)	94.0 × 84.0 (3.70 × 3.31)
3378 (206.1)	3378 (206.1)	4664 (284.5)	4664 (284.5)	4664 (284.5)	4664 (284.5)
9.6 : 1	9.6 : 1	9.6 : 1	9.6 : 1	9.6 : 1	9.6 : 1
SFI	SFI	SFI	SFI	SFI	SFI
91 or more	91 or more	91 or more	91 or more	91 or more	91 or more
142 / 4800 (190@4800)	142 / 4800 (190@4800)	179 / 4800 (240@4800)	179 / 4800 (240@4800)	179 / 4800 (240@4800)	179 / 4800 (240@4800)
298 / 3600 (220@3600)	298 / 3600 (220@3600)	427 / 3400 (315@3400)	427 / 3400 (315@3400)	427 / 3400 (315@3400)	427 / 3400 (315@3400)
12 – 48, 12 – 55*8	12 – 48, 12 – 55*8	12 – 55, 12 – 64*8	12 – 55, 12 – 64*8	12 – 55, 12 – 64*8	12 – 55, 12 – 64*8
960	960	960, 1560*9	960, 1560*9	960, 1560*9	960, 1560*9
1.4	1.4, 1.8*8	1.4	1.4	1.4	1.4
Dry, Single Plate, Diaphragm	—	—	—	—	—
R150F	A340F	A340E	A340E	A340E	A340E
3.830	2.804	2.804	2.804	2.804	2.804
2.062	1.531	1.531	1.531	1.531	1.531
1.436	1.000	1.000	1.000	1.000	1.000
1.000	0.705	0.705	0.705	0.705	0.705
0.838	—	—	—	—	—
4.220	2.393	2.393	2.393	2.393	2.393
1.000 / 2.566	1.000 / 2.566	—	—	—	—
4.100 / 4.100	4.300 / 4.300	— / 3.916	— / 3.916	— / 3.916	— / 3.916
7.5” / 8”	7.5” / 8”	— / 8”	— / 8”	— / 8”	— / 8”
Ventilated Disc	Ventilated Disc	Ventilated Disc	Ventilated Disc	Ventilated Disc	Ventilated Disc
Leading-Trailing Drum	Leading-Trailing Drum	Leading-Trailing Drum	Leading-Trailing Drum	Leading-Trailing Drum	Leading-Trailing Drum
Leading-Trailing Drum	Leading-Trailing Drum	Leading-Trailing Drum	Leading-Trailing Drum	Leading-Trailing Drum	Leading-Trailing Drum
Single 10”	Single 10”	Single 10”	Single 10”	Single 10”	Single 10”
LSP and BV	LSP and BV	LSP and BV	LSP and BV	LSP and BV	LSP and BV
Double Wishbone, Coil	Double Wishbone, Coil	Double Wishbone, Coil	Double Wishbone, Coil	Double Wishbone, Coil	Double Wishbone, Coil
Rigid Leaf	Rigid Leaf	Rigid Leaf	Rigid Leaf	Rigid Leaf	Rigid Leaf
STD	STD	STD	STD	STD	STD
—	—	—	—	—	—
Rack and Pinion	Rack and Pinion	Rack and Pinion	Rack and Pinion	Rack and Pinion	Rack and Pinion
18.6	18.6	18.6	18.6	18.6	18.6
Integral Type	Integral Type	Integral Type	Integral Type	Integral Type	Integral Type

Item / Area				U.S.A.			
Body Type				Regular Cab (4WD)	Access Cab (4WD)		
Vehicle Grade				SR5		Limited	SR5
Model Code				UCK40L-TRSSKA	UCK40L-ARSSKA	UCK40L-ARSLKA	UCK40L-ASSSKA
Major Dimensions & Vehicle Weights	Overall	Length	mm (in.)	5545 (218.3), 5525 (217.5)*1	5545 (218.3), 5525 (217.5)*1	5545 (218.3)	5545 (218.3), 5525 (217.5)*1
		Width	mm (in.)	1910 (75.2)*2, 3	1910 (75.2)*2, 3	2015 (79.3)	2000 (78.7)
		Height*4	mm (in.)	1805 (71.1), 1815 (71.5)*5	1810 (71.3), 1820 (71.7)*5	1820 (71.7)	1810 (71.3)
	Wheel Base		mm (in.)	3260 (128.3)	3260 (128.3)	3260 (128.3)	3260 (128.3)
	Tread	Front	mm (in.)	1675 (65.9)	1675 (65.9)	1675 (65.9)	1675 (65.9)
		Rear	mm (in.)	1648 (64.9)	1648 (64.9)	1648 (64.9)	1648 (64.9)
	Effective Head Room	Front	mm (in.)	1002 (39.4)	1004 (39.5)	1004 (39.5)	1004 (39.5)
		Rear	mm (in.)	—	964 (38.3)	964 (38.3)	964 (38.3)
	Effective Leg Room	Front	mm (in.)	1053 (41.5)	1053 (41.5)	1053 (41.5)	1053 (41.5)
		Rear	mm (in.)	—	727 (28.6)	727 (28.6)	727 (28.6)
	Shoulder Room	Front	mm (in.)	1584 (62.4)	1584 (62.4)	1584 (62.4)	1584 (62.4)
		Rear	mm (in.)	—	1609.2 (63.4)	1609.2 (63.4)	1609.2 (63.4)
	Cargo Space	Length	mm (in.)	—	—	—	—
		Width	mm (in.)	—	—	—	—
		Height	mm (in.)	—	—	—	—
	Overhang	Front	mm (in.)	945 (37.2), 920 (36.2)*1	945 (37.2), 920 (36.2)*1	945 (37.2)	945 (37.2), 920 (36.2)*1
		Rear	mm (in.)	1225 (48.2)	1225 (48.2)	1225 (48.2)	1225 (48.2)
	Min. Running Ground Clearance		mm (in.)	285 (11.2)	285 (11.2)	295 (11.6)	285 (11.2)
	Angle of Approach		degrees	28°	28°	29°	28°
	Angle of Departure		degrees	23°	23°	24°	23°
	Curb Mass.	Front	kg (lb)	1193 (2630)	1211 (2670)	1218 (2685)	1213 (2675)
		Rear	kg (lb)	844 (1860)	932 (2055)	903 (1990)	937 (2065)
		Total	kg (lb)	2037 (4490)	2143 (4725)	2121 (4675)	2150 (4740)
	Gross Vehicle Mass.	Front	kg (lb)	—	—	—	—
		Rear	kg (lb)	—	—	—	—
		Total	kg (lb)	2812 (6200)	2812 (6200)	2812 (6200)	2726 (6010)
	Fuel Tank Capacity		L (U.S.gal., lmp.gal.)	100 (26.4, 22.0)	100 (26.4, 22.0)	100 (26.4, 22.0)	100 (26.4, 22.0)
	Luggage Compartment Capacity		m^3 (cu.ft.)	—	—	—	—
Performance	Max. Speed		km/h (mph)	165 (102)	165 (102)	165 (102)	165 (102)
	Max. Cruising Speed		km/h (mph)	150 (93)	150 (93)	150 (93)	150 (93)
	Max. Permissible Speed	1st Gear	km/h (mph)	25 (15)*6 / 65 (40)*7	25 (15)*6 / 65 (40)*7	25 (15)*6 / 65 (40)*7	25 (15)*6 / 65 (40)*7
		2nd Gear	km/h (mph)	45 (28)*6 / 120 (75)*7	45 (28)*6 / 120 (75)*7	45 (28)*6 / 120 (75)*7	45 (28)*6 / 120 (75)*7
		3rd Gear	km/h (mph)	—	—	—	—
		4th Gear	km/h (mph)	—	—	—	—
	Turning Diameter (Outside Front)	Wall to Wall	m (ft.)	14.1 (46.3)	14.1 (46.3)	14.1 (46.3)	14.1 (46.3)
		Curb to Curb	m (ft.)	13.5 (44.3)	13.5 (44.3)	13.5 (44.3)	13.5 (44.3)
Engine	Engine Type			2UZ-FE	2UZ-FE	2UZ-FE	2UZ-FE
	Valve Mechanism			32-Valve, DOHC	32-Valve, DOHC	32-Valve, DOHC	32-Valve, DOHC
	Bore × Stroke		mm (in.)	94.0 × 84.0 (3.70 × 3.31)	94.0 × 84.0 (3.70 × 3.31)	94.0 × 84.0 (3.70 × 3.31)	94.0 × 84.0 (3.70 × 3.31)
	Displacement		cm^3 (cu.in.)	4664 (284.5)	4664 (284.5)	4664 (284.5)	4664 (284.5)
	Compression Ratio			9.6 : 1	9.6 : 1	9.6 : 1	9.6 : 1
	Carburetor Type			SFI	SFI	SFI	SFI
	Research Octane No.		RON	91 or more	91 or more	91 or more	91 or more
	Max. Output (SAE-NET)		kW/rpm (HP@rpm)	179 / 4800 (240@4800)	179 / 4800 (240@4800)	179 / 4800 (240@4800)	179 / 4800 (240@4800)
	Max. Torque (SAE-NET)		N·m/rpm (lb-ft@rpm)	427 / 3400 (315@3400)	427 / 3400 (315@3400)	427 / 3400 (315@3400)	427 / 3400 (315@3400)
Engine Electrical	Battery Capacity (5HR)		Voltage & Amp. hr.	12 – 55, 12 – 64*8	12 – 55, 12 – 64*8	12 – 55, 12 – 64*8	12 – 55, 12 – 64*8
	Alternator Output		Watts	960, 1560*9	960, 1560*9	960, 1560*9	960, 1560*9
	Starter Output		kW	1.4	1.4	1.4	1.4
Chassis	Clutch Type			—	—	—	—
	Transmission Type			A340F	A340F	A340F	A340F
	Transmission Gear Ratio	In First		2.804	2.804	2.804	2.804
		In Second		1.531	1.531	1.531	1.531
		In Third		1.000	1.000	1.000	1.000
		In Fourth		0.705	0.705	0.705	0.705
		In Fifth		—	—	—	—
		In Reverse		2.393	2.393	2.393	2.393
	Transfer Gear Ratio H4/L4			1.000 / 2.566	1.000 / 2.566	1.000 / 2.566	1.000 / 2.566
	Differential Gear Ratio (Front/Rear)			3.909 / 3.909	3.909 / 3.909	3.909 / 3.909	3.909 / 3.909
	Differential Gear Size (Front/Rear)		in.	7.5” / 8”	7.5” / 8”	7.5” / 8”	7.5” / 8”
	Brake Type	Front		Ventilated Disc	Ventilated Disc	Ventilated Disc	Ventilated Disc
		Rear		Leading-Trailing Drum	Leading-Trailing Drum	Leading-Trailing Drum	Leading-Trailing Drum
	Parking Brake Type			Leading-Trailing Drum	Leading-Trailing Drum	Leading-Trailing Drum	Leading-Trailing Drum
	Brake Booster Type and Size		in.	Single 10”	Single 10”	Single 10”	Single 10”
	Proportioning Valve Type			LSP and BV	LSP and BV	LSP and BV	LSP and BV
	Suspension Type	Front		Double Wishbone, Coil	Double Wishbone, Coil	Double Wishbone, Coil	Double Wishbone, Coil
		Rear		Rigid Leaf	Rigid Leaf	Rigid Leaf	Rigid Leaf
	Stabilizer Bar	Front		STD	STD	STD	STD
		Rear		—	—	—	—
	Steering Gear Type			Rack and Pinion	Rack and Pinion	Rack and Pinion	Rack and Pinion
	Steering Gear Ratio (Overall)			18.6	18.6	18.6	18.6
	Power Steering Type			Integral Type	Integral Type	Integral Type	Integral Type

*1: With Steel Bumper
*2: With Wheel Arch Moulding, +35 (1.4)
*3: With Over Fender, +105 (4.1)
*4: Unladen Vehicle
*5: With P265 / 70R16 or P265 / 65R17 tires
*6: Low mode
*7: High mode
*8: Cold Area Spec.
*9: Option
*10: With Off-Road Package

U.S.A.	Canada				
Access Cab (4WD)	Regular Cab (2WD)	Access Cab (2WD)	Regular Cab (4WD)	Access Cab (4WD)	
Limited	STD			SR5	Limited
UCK40L-ASSLKA	VCK30L-TRSDKK	UCK30L-ARSSKK	UCK40L-TRSDKK	UCK40L-ARSSKK	UCK40L-ARSLKK
5545 (218.3)	5545 (218.3), 5525 (217.5)*1	5545 (218.3), 5525 (217.5)*1	5545 (218.3), 5525 (217.5)*1	5545 (218.3), 5525 (217.5)*1	5545 (218.3)
2000 (78.7)	1910 (75.2)*2, 3	1910 (75.2)*2, 3	1910 (75.2)*2, 3	1910 (75.2)*2, 3	2015 (79.3)
1810 (71.3)	1795 (70.7)	1790 (70.5)	1805 (71.1), 1815 (71.5)*5	1810 (71.3), 1820 (71.7)*5	1820 (71.7)
3260 (128.3)	3260 (128.3)	3260 (128.3)	3260 (128.3)	3260 (128.3)	3260 (128.3)
1680 (66.1)	1680 (66.1)	1680 (66.1)	1675 (65.9)	1675 (65.9)	1675 (65.9)
1648 (64.9)	1648 (64.9)	1648 (64.9)	1648 (64.9)	1648 (64.9)	1648 (64.9)
1004 (39.5)	1002 (39.4)	1004 (39.5)	1002 (39.4)	1004 (39.5)	1004 (39.5)
964 (38.3)	—	964 (38.3)	—	964 (38.3)	964 (38.3)
1053 (41.5)	1053 (41.5)	1053 (41.5)	1053 (41.5)	1053 (41.5)	1053 (41.5)
727 (28.6)	—	727 (28.6)	—	727 (28.6)	727 (28.6)
1584 (62.4)	1584 (62.4)	1584 (62.4)	1584 (62.4)	1584 (62.4)	1584 (62.4)
1609.2 (63.4)	—	1609.2 (63.4)	—	1609.2 (63.4)	1609.2 (63.4)
—	—	—	—	—	—
—	—	—	—	—	—
—	—	—	—	—	—
945 (37.2)	945 (37.2), 920 (36.2)*1	945 (37.2), 920 (36.2)*1	945 (37.2), 920 (36.2)*1	945 (37.2), 920 (36.2)*1	945 (37.2)
1225 (48.2)	1225 (48.2)	1225 (48.2)	1225 (48.2)	1225 (48.2)	1225 (48.2)
285 (11.2)	265 (10.4)	265 (10.4)	285 (11.2)	285 (11.2)	295 (11.6)
28°	26°	26°	27°	28°	29°
23°	23°	23°	24°	23°	24°
1218 (2685)	1009 (2225)	1123 (2475)	1186 (2615)	1218 (2685)	1225 (2700)
907 (2000)	778 (1715)	903 (1990)	844 (1860)	932 (2055)	903 (1990)
2125 (4685)	1787 (3940)	2026 (4465)	2030 (4475)	2150 (4740)	2128 (4690)
—	—	—	—	—	—
—	—	—	—	—	—
2726 (6010)	2495 (5500)	2812 (6200)	2812 (6200)	2812 (6200)	2812 (6200)
100 (26.4, 22.0)	100 (26.4, 22.0)	100 (26.4, 22.0)	100 (26.4, 22.0)	100 (26.4, 22.0)	100 (26.4, 22.0)
—	—	—	—	—	—
165 (102)	165 (102)	165 (102)	165 (102)	165 (102)	165 (102)
150 (93)	150 (93)	150 (93)	150 (93)	150 (93)	150 (93)
25 (15)*6 / 65 (40)*7	60 (37)	65 (40)	25 (15)*6 / 65 (40)*7	25 (15)*6 / 65 (40)*7	25 (15)*6 / 65 (40)*7
45 (28)*6 / 120 (75)*7	115 (71)	120 (75)	45 (28)*6 / 120 (75)*7	45 (28)*6 / 120 (75)*7	45 (28)*6 / 120 (75)*7
—	—	—	—	—	—
—	—	—	—	—	—
14.1 (46.3)	14.2 (46.6)	14.2 (46.6)	14.1 (46.3)	14.1 (46.3)	14.1 (46.3)
13.5 (44.3)	13.7 (44.9)	13.7 (44.9)	13.5 (44.3)	13.5 (44.3)	13.5 (44.3)
2UZ-FE	5VZ-FE	2UZ-FE	2UZ-FE	2UZ-FE	2UZ-FE
32-Valve, DOHC	24-Valve, DOHC	32-Valve, DOHC	32-Valve, DOHC	32-Valve, DOHC	32-Valve, DOHC
94.0 × 84.0 (3.70 × 3.31)	93.5 × 82.0 (3.68 × 3.23)	94.0 × 84.0 (3.70 × 3.31)	94.0 × 84.0 (3.70 × 3.31)	94.0 × 84.0 (3.70 × 3.31)	94.0 × 84.0 (3.70 × 3.31)
4664 (284.5)	3378 (206.1)	4664 (284.5)	4664 (284.5)	4664 (284.5)	4664 (284.5)
9.6 : 1	9.6 : 1	9.6 : 1	9.6 : 1	9.6 : 1	9.6 : 1
SFI	SFI	SFI	SFI	SFI	SFI
91 or more	91 or more	91 or more	91 or more	91 or more	91 or more
179 / 4800 (240@4800)	142 / 4800 (190@4800)	179 / 4800 (240@4800)	183 / 4800 (245@4800)	179 / 4800 (240@4800)	179 / 4800 (240@4800)
427 / 3400 (315@3400)	298 / 3600 (220@3600)	427 / 3400 (315@3400)	427 / 3400 (315@3400)	427 / 3400 (315@3400)	427 / 3400 (315@3400)
12 – 55, 12 – 64*8	12 – 55	12 – 64	12 – 64	12 – 64	12 – 64
960, 1560*9	960	960, 1560*9	960, 1560*9	960, 1560*9	960, 1560*9
1.4	1.8	2.0	2.0	2.0	2.0
—	—	—	—	—	—
A340F	A340E	A340E	A340F	A340F	A340F
2.804	2.804	2.804	2.804	2.804	2.804
1.531	1.531	1.531	1.531	1.531	1.531
1.000	1.000	1.000	1.000	1.000	1.000
0.705	0.705	0.705	0.705	0.705	0.705
—	—	—	—	—	—
2.393	2.393	2.393	2.393	2.393	2.393
1.000 / 2.566	—	—	1.000 / 2.566	1.000 / 2.566	1.000 / 2.566
3.909 / 3.909	— / 4.083	— / 3.916	3.909 / 3.909	3.909 / 3.909	3.909 / 3.909
7.5” / 8”	— / 8”	— / 8”	7.5” / 8”	7.5” / 8”	7.5” / 8”
Ventilated Disc	Ventilated Disc	Ventilated Disc	Ventilated Disc	Ventilated Disc	Ventilated Disc
Leading-Trailing Drum	Leading-Trailing Drum	Leading-Trailing Drum	Leading-Trailing Drum	Leading-Trailing Drum	Leading-Trailing Drum
Leading-Trailing Drum	Leading-Trailing Drum	Leading-Trailing Drum	Leading-Trailing Drum	Leading-Trailing Drum	Leading-Trailing Drum
Single 10”	Single 10”	Single 10”	Single 10”	Single 10”	Single 10”
LSP and BV	LSP and BV	LSP and BV	LSP and BV	LSP and BV	LSP and BV
Double Wishbone, Coil	Double Wishbone, Coil	Double Wishbone, Coil	Double Wishbone, Coil	Double Wishbone, Coil	Double Wishbone, Coil
Rigid Leaf	Rigid Leaf	Rigid Leaf	Rigid Leaf	Rigid Leaf	Rigid Leaf
STD	STD	STD	STD	STD	STD
—	—	—	—	—	—
Rack and Pinion	Rack and Pinion	Rack and Pinion	Rack and Pinion	Rack and Pinion	Rack and Pinion
18.6	18.6	18.6	18.6	18.6	18.6
Integral Type	Integral Type	Integral Type	Integral Type	Integral Type	Integral Type

FOREWORD

This wiring diagram manual has been prepared to provide information on the electrical system of the 2003 TOYOTA TUNDRA.

Applicable models: UCK 30, 40 Series
VCK 30, 40 Series

For service specifications and repair procedures of the above models other than those listed in this manual, refer to the following manuals;

Manual Name	Pub. No.
▲2003 TOYOTA TUNDRA Repair Manual Volume 1	RM956U1
Volume 2	RM956U2
▲2003 TOYOTA New Car Features	NCF228U

All information in this manual is based on the latest product information at the time of publication. However, specifications and procedures are subject to change without notice.

TOYOTA MOTOR CORPORATION

NOTICE

When handling supplemental restraint system components (removal, installation or inspection, etc.), always follow the direction given in the repair manuals listed above to prevent accidents and supplemental restraint system malfunction.

A INTRODUCTION

This manual consists of the following 13 sections:

No.	Section	Description
A	INDEX	Index of the contents of this manual.
	INTRODUCTION	Brief explanation of each section.
B	HOW TO USE THIS MANUAL	Instructions on how to use this manual.
C	TROUBLE–SHOOTING	Describes the basic inspection procedures for electrical circuits.
D	ABBREVIATIONS	Defines the abbreviations used in this manual.
E	GLOSSARY OF TERMS AND SYMBOLS	Defines the symbols and functions of major parts.
F	RELAY LOCATIONS	Shows position of the Electronic Control Unit, Relays, Relay Block, etc. This section is closely related to the system circuit.
G	ELECTRICAL WIRING ROUTING	Describes position of Parts Connectors, Splice points, Ground points, etc. This section is closely related to the system circuit.
H	INDEX	Index of the system circuits.
	SYSTEM CIRCUITS	Electrical circuits of each system are shown from the power supply through ground points. Wiring connections and their positions are shown and classified by code according to the connection method. (Refer to the section, ”How to use this manual”). The ”System Outline” and ”Service Hints” useful for troubleshooting are also contained in this section.
I	GROUND POINT	Shows ground positions of all parts described in this manual.
J	POWER SOURCE (Current Flow Chart)	Describes power distribution from the power supply to various electrical loads.
K	CONNECTOR LIST	Describes the form of the connectors for the parts appeared in this book. This section is closely related to the system circuit.
L	PART NUMBER OF CONNECTORS	Indicates the part number of the connectors used in this manual.
M	OVERALL ELECTRICAL WIRING DIAGRAM	Provides circuit diagrams showing the circuit connections.

2003 TOYOTA TUNDRA ELECTRICAL WIRING DIAGRAM

	Section Code	Page
INTRODUCTION	A	2
HOW TO USE THIS MANUAL	B	3
TROUBLESHOOTING	C	12
ABBREVIATIONS	D	17
GLOSSARY OF TERMS AND SYMBOLS	E	18
RELAY LOCATIONS	F	20
ELECTRICAL WIRING ROUTING	G	30
SYSTEM CIRCUITS	H	55
GROUND POINT	I	244
POWER SOURCE (Current Flow Chart)	J	250
CONNECTOR LIST	K	256
PART NUMBER OF CONNECTORS	L	266
OVERALL ELECTRICAL WIRING DIAGRAM	M	270

▲2002 TOYOTA MOTOR CORPORATION
All rights reserved. This book may not be reproduced or copied, in whole or in part, without the written permission of Toyota Motor Corporation.

This manual provides information on the electrical circuits installed on vehicles by dividing them into a circuit for each system.

The actual wiring of each system circuit is shown from the point where the power source is received from the battery as far as each ground point. (All circuit diagrams are shown with the switches in the OFF position.)

When troubleshooting any problem, first understand the operation of the circuit where the problem was detected (see System Circuit section), the power source supplying power to that circuit (see Power Source section), and the ground points (see Ground Point section). See the System Outline to understand the circuit operation.

When the circuit operation is understood, begin troubleshooting of the problem circuit to isolate the cause. Use Relay Location and Electrical Wiring Routing sections to find each part, junction block and wiring harness connectors, wiring harness and wiring harness connectors, splice points, and ground points of each system circuit. Internal wiring for each junction block is also provided for better understanding of connection within a junction block.
Wiring related to each system is indicated in each system circuit by arrows (from__, to__). When overall connections are required, see the Overall Electrical Wiring Diagram at the end of this manual.

[A]

STOP LIGHT

* The system shown here is an EXAMPLE ONLY. It is different to the actual circuit shown in the SYSTEM CIRCUITS SECTION.

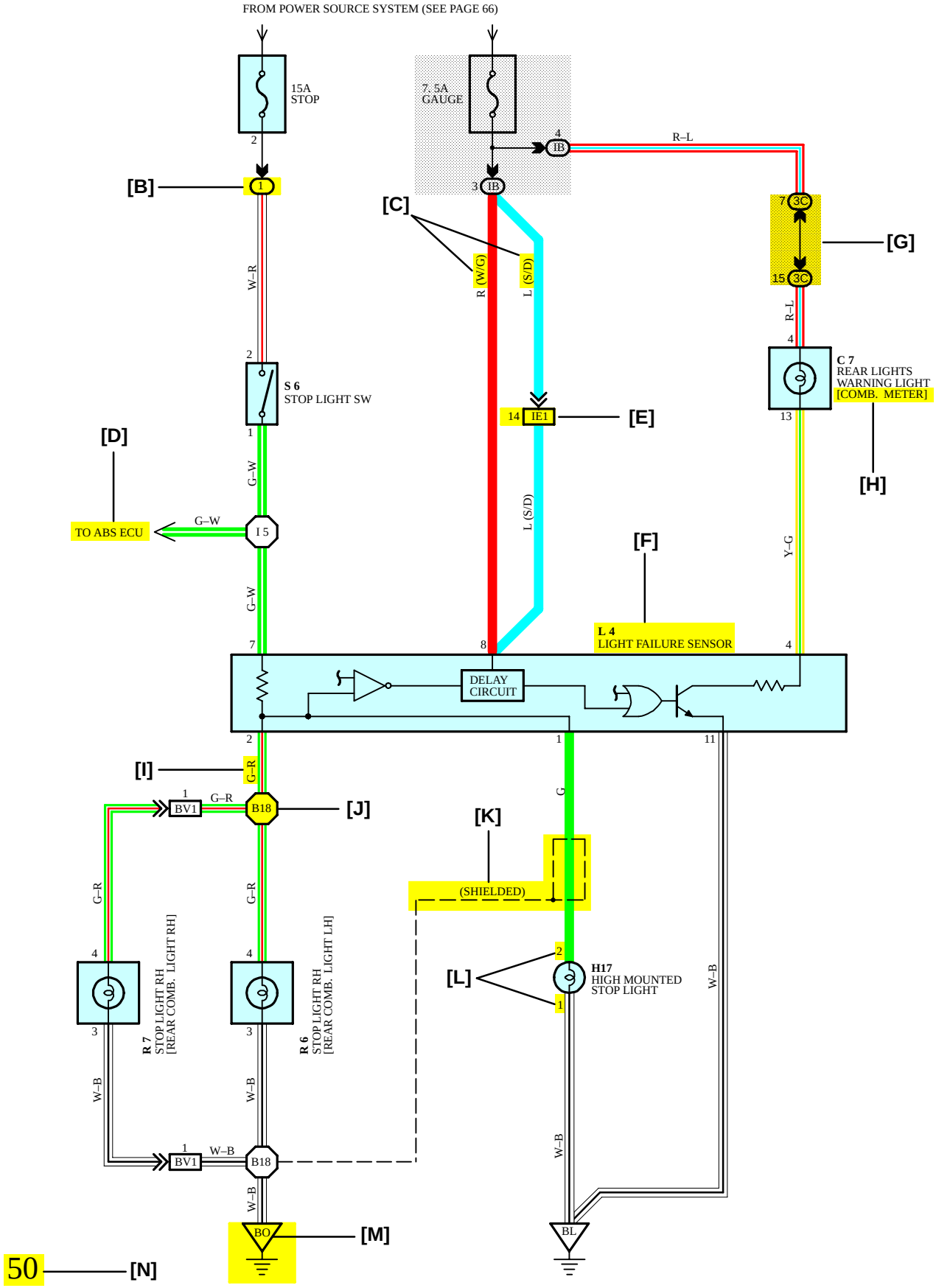

[A] : System Title

[B] : Indicates a Relay Block. No shading is used and only the Relay Block No. is shown to distinguish it from the J/B

Example: (1) Indicates Relay Block No.1

[C] : ( ) is used to indicate different wiring and connector, etc. when the vehicle model, engine type, or specification is different.

[D] : Indicates related system.

[E] : Indicates the wiring harness and wiring harness connector. The wiring harness with male terminal is shown with arrows (»).
Outside numerals are pin numbers.

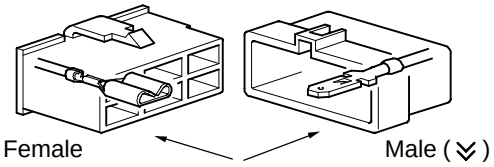

The first letter of the code for each wiring harness and wiring harness connector(s) indicates the component's location, e.g, "E" for the Engine Compartment, "I" for the Instrument Panel and Surrounding area, and "B" for the Body and Surrounding area.

When more than one code has the first and second letters in common, followed by numbers (e.g, IH1, IH2), this indicates the same type of wiring harness and wiring harness connector.

[F] : Represents a part (all parts are shown in sky blue). The code is the same as the code used in parts position.

[G] : Junction Block (The number in the circle is the J/B No. and the connector code is shown beside it). Junction Blocks are shaded to clearly separate them from other parts.

Example:

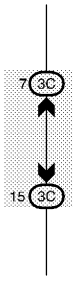

3C indicates that it is inside Junction Block No.3

[H] : When 2 parts both use one connector in common, the parts connector name used in the wire routing section is shown in square brackets [ ].

[I] : Indicates the wiring color.

Wire colors are indicated by an alphabetical code.

B	= Black	W	= White	BR	= Brown
L	= Blue	V	= Violet	SB	= Sky Blue
R	= Red	G	= Green	LG	= Light Green
P	= Pink	Y	= Yellow	GR	= Gray
O	= Orange				

The first letter indicates the basic wire color and the second letter indicates the color of the stripe.

Example: L – Y

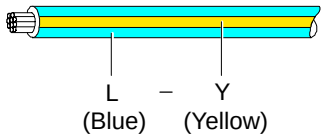

[J] : Indicates a wiring Splice Point (Codes are "E" for the Engine Room, "I" for the Instrument Panel, and "B" for the Body).

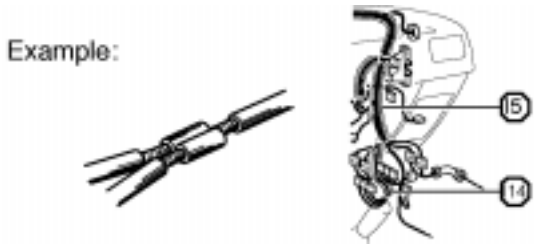

The Location of splice Point I 5 is indicated by the shaded section.

[K] : Indicates a shielded cable.

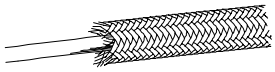

[L] : Indicates the pin number of the connector.
The numbering system is different for female and male connectors.

Example:

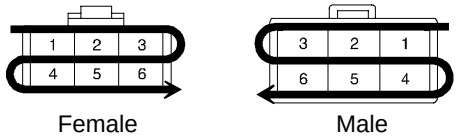

[M] : Indicates a ground point.

The first letter of the code for each ground point(s) indicates the component's location, e.g, "E" for the Engine Compartment, "I" for the Instrument Panel and Surrounding area, and "B" for the Body and Surrounding area.

[N] : Page No.

[O] SYSTEM OUTLINE

Current is applied at all times through the STOP fuse to TERMINAL 2 of the stop light SW.
When the ignition SW is turned on, current flows from the GAUGE fuse to TERMINAL 8 of the light failure sensor, and also flows through the rear lights warning light to TERMINAL 4 of the light failure sensor.

STOP LIGHT DISCONNECTION WARNING

When the ignition SW is turned on and the brake pedal is pressed (Stop light SW on), if the stop light circuit is open, the current flowing from TERMINAL 7 of the light failure sensor to TERMINALS 1, 2 changes, so the light failure sensor detects the disconnection and the warning circuit of the light failure sensor is activated.
As a result, the current flows from TERMINAL 4 of the light failure sensor to TERMINAL 11 to GROUND and turns the rear lights warning light on. By pressing the brake pedal, the current flowing to TERMINAL 8 of the light failure sensor keeps the warning circuit on and holds the warning light on until the ignition SW is turned off.

[P] SERVICE HINTS

S6 STOP LIGHT SW

2–1 : Closed with the brake pedal depressed

L4 LIGHT FAILURE SENSOR

1, 2, 7–GROUND : Approx. **12** volts with the stop light SW on
4, 8–GROUND : Approx. **12** volts with the ignition SW at **ON** position
11–GROUND : Always continuity

[Q] : PARTS LOCATION

Code	See Page	Code	See Page	Code	See Page
C7	34	L4	36	R7	37
H17	36	R6	37	S6	35

[R] : RELAY BLOCKS

Code	See Page	Relay Blocks (Relay Block Location)
1	18	R/B No.1 (Instrument Panel Left)

[S] : JUNCTION BLOCK AND WIRE HARNESS CONNECTOR

Code	See Page	Junction Block and Wire Harness (Connector Location)
IB	20	Instrument Panel Wire and Instrument Panel J/B (Lower Finish Panel)
3C	22	Instrument Panel Wire and J/B No.3 (Instrument Panel Left Side)

[T] : CONNECTOR JOINING WIRE HARNESS AND WIRE HARNESS

Code	See Page	Joining Wire Harness and Wire Harness (Connector Location)
IE1	42	Floor Wire and Instrument Panel Wire (Left Kick Panel)
BV1	50	Luggage Room Wire and Floor Wire (Luggage Compartment Left)

[U] : GROUND POINTS

Code	See Page	Ground Points Location
BL	50	Under the Left Quarter Pillar
BO	50	Back Panel Center

[V] : SPLICE POINTS

Code	See Page	Wire Harness with Splice Points	Code	See Page	Wire Harness with Splice Points
I5	44	Cowl Wire	B18	50	Luggage Room Wire

[O] : Explains the system outline.

[P] : Indicates values or explains the function for reference during troubleshooting.

[Q] : Indicates the reference page showing the position on the vehicle of the parts in the system circuit.

Example : Part ”L4” (Light Failure Sensor) is on page 36 of the manual.
∗ The letter in the code is from the first letter of the part, and the number indicates its order in parts starting with that letter.

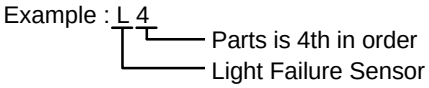

[R] : Indicates the reference page showing the position on the vehicle of Relay Block Connectors in the system circuit.

Example : Connector ”1” is described on page 18 of this manual and is installed on the left side of the instrument panel.

[S] : Indicates the reference page showing the position on the vehicle of J/B and Wire Harness in the system circuit.

Example : Connector ”3C” connects the Instrument Panel Wire and J/B No.3. It is described on page 22 of this manual, and is installed on the instrument panel left side.

[T] : Indicates the reference page describing the wiring harness and wiring harness connector (the female wiring harness is shown first, followed by the male wiring harness).

Example : Connector ”IE1” connects the floor wire (female) and Instrument panel wire (male). It is described on page 42 of this manual, and is installed on the left side kick panel.

[U] : Indicates the reference page showing the position of the ground points on the vehicle.

Example : Ground point ”BO” is described on page 50 of this manual and is installed on the back panel center.

[V] : Indicates the reference page showing the position of the splice points on the vehicle.

Example : Splice point ”I5” is on the Cowl Wire Harness and is described on page 44 of this manual.

B HOW TO USE THIS MANUAL

The ground points circuit diagram shows the connections from all major parts to the respective ground points. When troubleshooting a faulty ground point, checking the system circuits which use a common ground may help you identify the problem ground quickly. The relationship between ground points (EA, IB and IC shown below) can also be checked this way.

I GROUND POINT

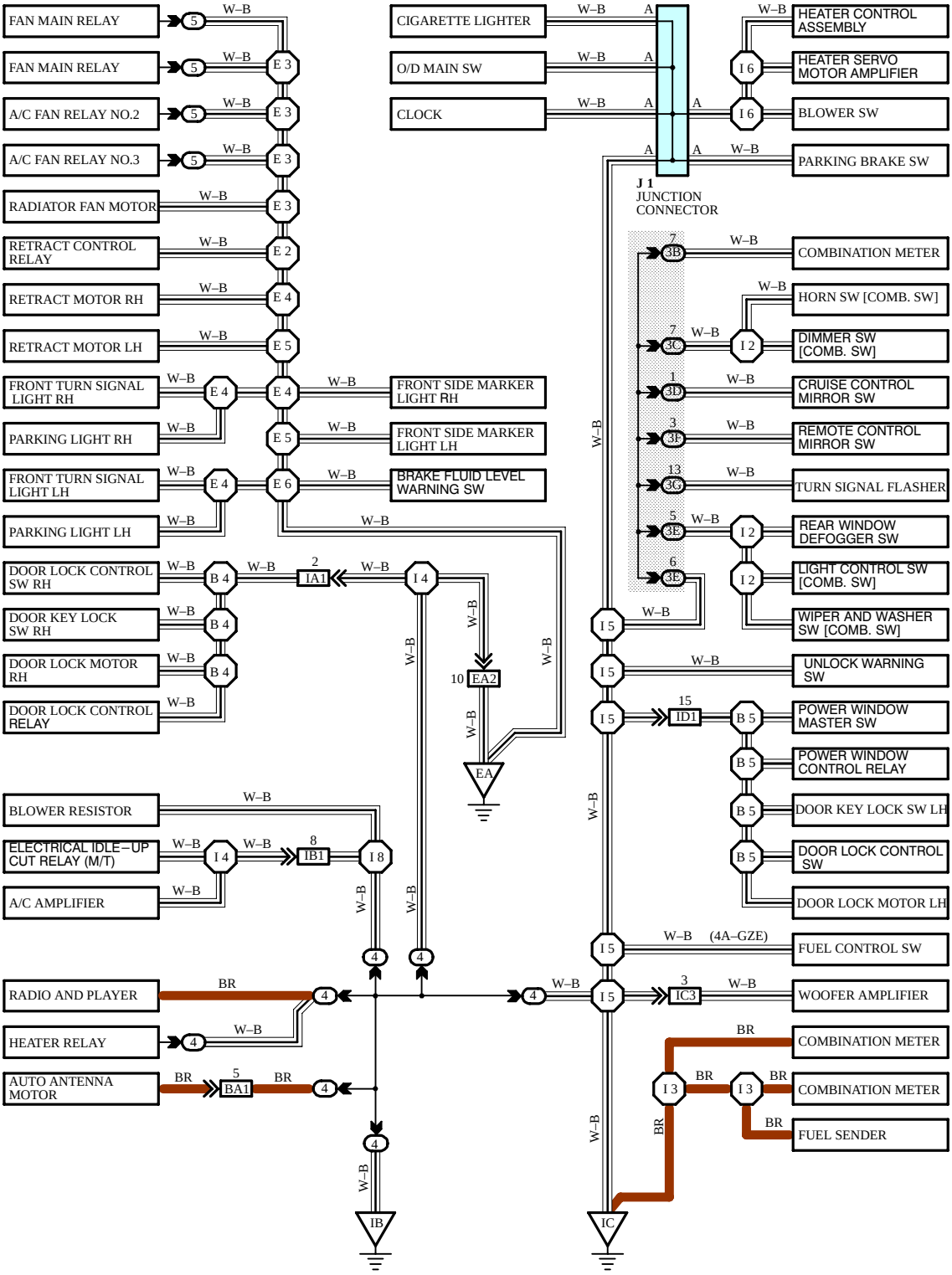

* The system shown here is an EXAMPLE ONLY. It is different to the actual circuit shown in the SYSTEM CIRCUITS SECTION.

The ”Current Flow Chart” section, describes which parts each power source (fuses, fusible links, and circuit breakers) transmits current to. In the Power Source circuit diagram, the conditions when battery power is supplied to each system are explained. Since all System Circuit diagrams start from the power source, the power source system must be fully understood.

J POWER SOURCE (Current Flow Chart)

The chart below shows the route by which current flows from the battery to each electrical source (Fusible Link, Circuit Breaker, Fuse, etc.) and other parts.

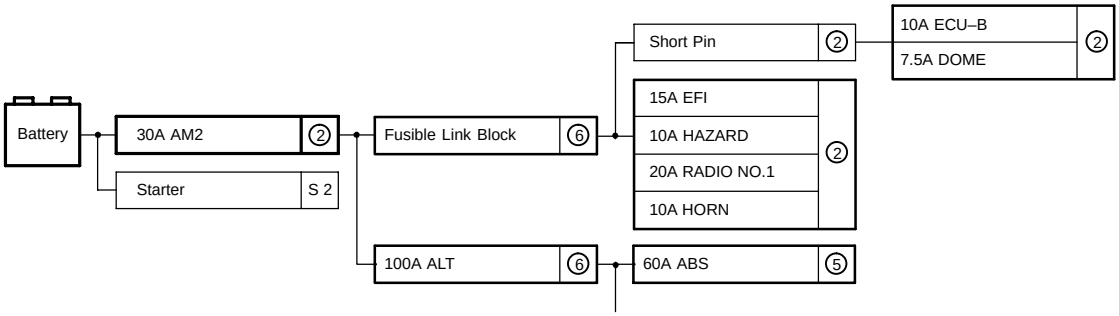

Engine Room R/B (See Page 20)

Fuse		System	Page
20A	STOP	ABS ABS and Traction Control Cruise Control Electronically Controlled Transmission and A/T Indicator Multiplex Communication System	194 187 180 166 210
10A	DOME	Cigarette Lighter and Clock Combination Meter Headlight Interior Light Key Reminder and Seat Belt Warning Light Auto Turn Off ft Deterrent and Door L...	214 230 112 122

POWER SOURCE

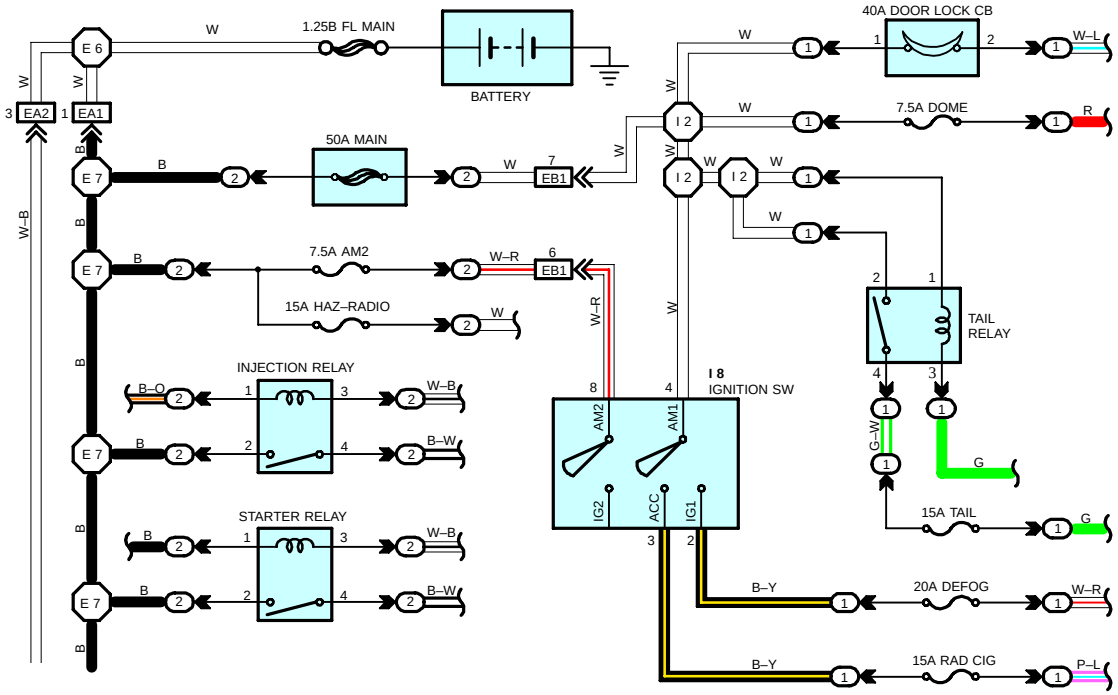

* The system shown here is an EXAMPLE ONLY. It is different to the actual circuit shown in the SYSTEM CIRCUITS SECTION.

K CONNECTOR LIST

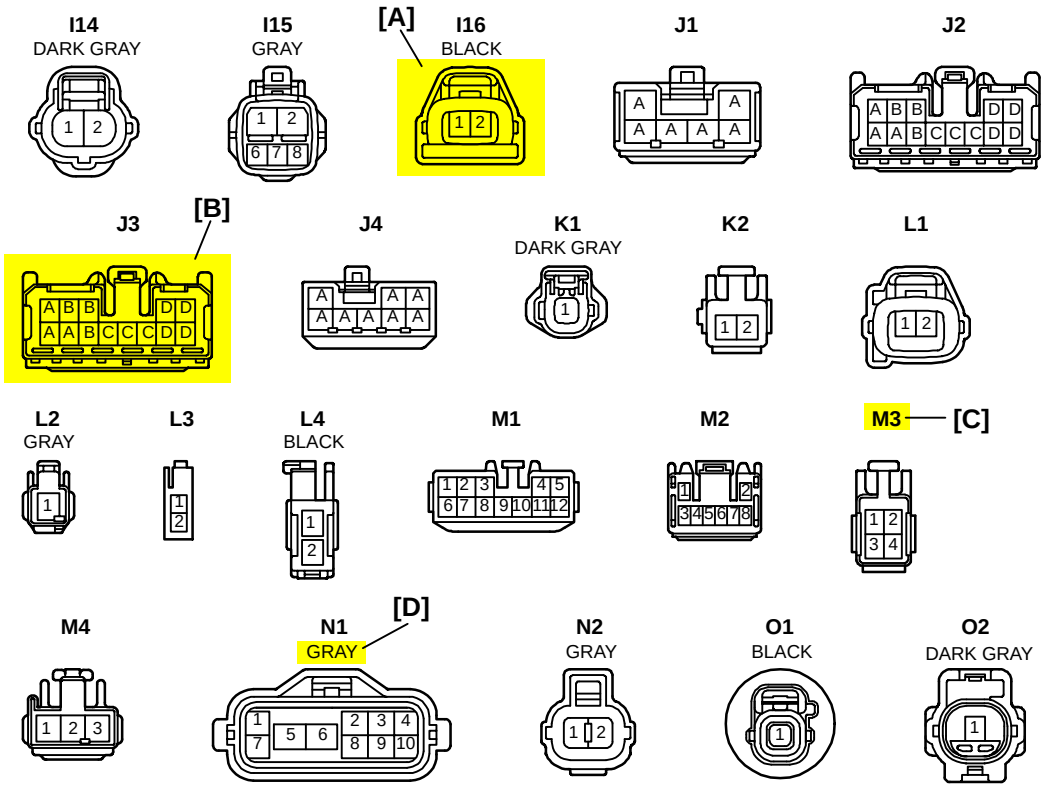

[A] : Indicates connector to be connected to a part. (The numeral indicates the pin No.)

[B] : Junction Connector
Indicates a connector which is connected to a short terminal.

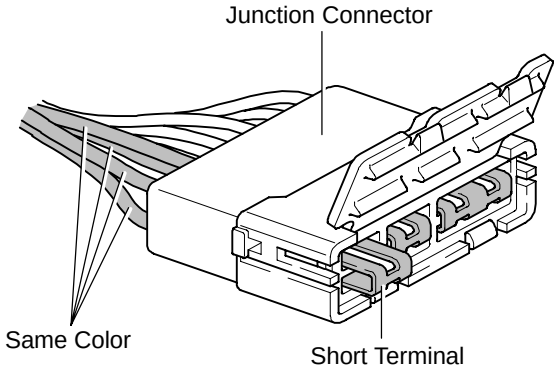

Junction connector in this manual include a short terminal which is connected to a number of wire harnesses. Always perform inspection with the short terminal installed. (When installing the wire harnesses, the harnesses can be connected to any position within the short terminal grouping. Accordingly, in other vehicles, the same position in the short terminal may be connected to a wire harness from a different part.)
Wire harness sharing the same short terminal grouping have the same color.

[C] : Parts Code
The first letter of the code is taken from the first letter of part, and the numbers indicates its order in parts which start with the same letter.

[D] : Connector Color
Connectors not indicated are milky white in color.

L PART NUMBER OF CONNECTORS

Code	Part Name	Part Number
A 1	A/C Ambient Temp. Sensor	90980–11070
A 2	A/C Condenser Fan Motor	90980–11237
A 3	A/C Condenser Fan Relay	90980–10940
A 4	A/C Triple Pressure SW (A/C Dual and Single Pressure SW)	90980–10943
[A]	A/T Oil Temp. Sensor [B]	90980–11413 [C]
A 6	ABS Actuator	90980–11151
A 7	ABS Actuator	90980–11009
A 8	ABS Speed Sensor Front LH	90980–10941
A 9	ABS Speed Sensor Front RH	90980–11002
A10	Airbag Sensor Front LH	90980–11856
A11	Airbag Sensor Front RH	
A12	[illegible]	90980–11194
	[illegible]	90980–11[illegible]

Code	Part Name	Part Number
D 4	Diode (Door Courtesy Light)	90980–11608
D 5	Diode (Key Off Operation)	90980–10962
D 6	Diode (Luggage Compartment Light)	90980–11608
D 7	Door Lock Control Relay	90980–10848
D 8	Door Courtesy Light LH	90980–11148
D 9	Door Courtesy Light RH	
D10	Door Courtesy SW LH	90980–11097
D11	Door Courtesy SW RH	
D12	Door Courtesy SW Front LH	90980–11156
D13	Door Courtesy SW Front RH	
D14	Door Courtesy SW Rear LH	
D15	Door Courtesy SW Rear RH	
D16	[illegible] Unlock SW LH	90980–11170
	[illegible]	

[A] : Part Code

[B] : Part Name

[C] : Part Number
Toyota Part Number are indicated.

Not all of the above part numbers of the connector are established for the supply. In case of ordering a connector or terminal with wire, please confirm in advance if there is supply for it using “Parts Catalog News” (published by Parts Engineering Administration Dept.).

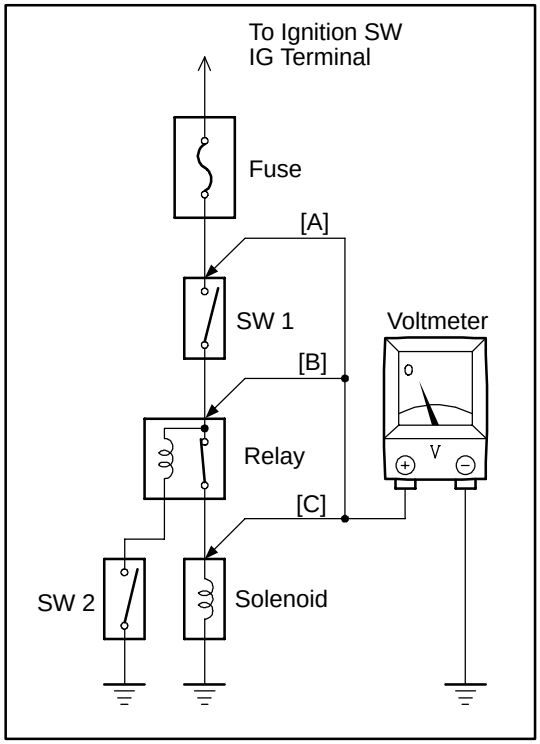

VOLTAGE CHECK

(a) Establish conditions in which voltage is present at the check point.

Example:
[A] – Ignition SW on
[B] – Ignition SW and SW 1 on
[C] – Ignition SW, SW 1 and Relay on (SW 2 off)

(b) Using a voltmeter, connect the negative lead to a good ground point or negative battery terminal, and the positive lead to the connector or component terminal.
This check can be done with a test light instead of a voltmeter.

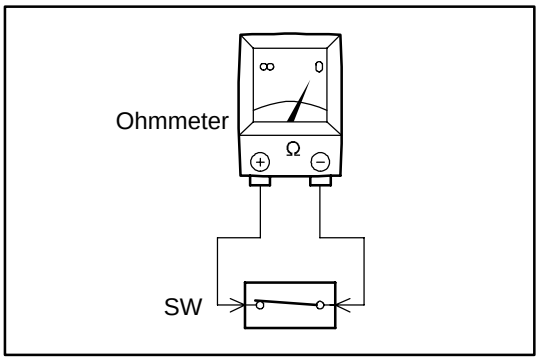

CONTINUITY AND RESISTANCE CHECK

(a) Disconnect the battery terminal or wire so there is no voltage between the check points.

(b) Contact the two leads of an ohmmeter to each of the check points.

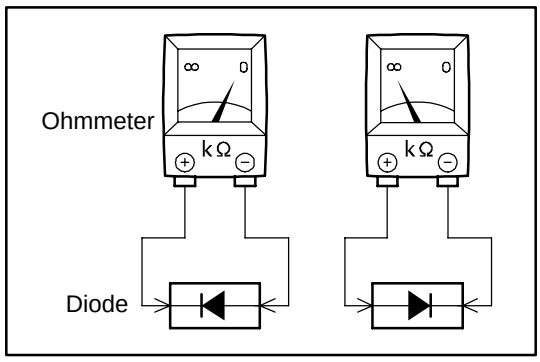

If the circuit has diodes, reverse the two leads and check again.
When contacting the negative lead to the diode positive side and the positive lead to the negative side, there should be continuity.
When contacting the two leads in reverse, there should be no continuity.

(c) Use a volt/ohmmeter with high impedance (10 kΩ/V minimum) for troubleshooting of the electrical circuit.

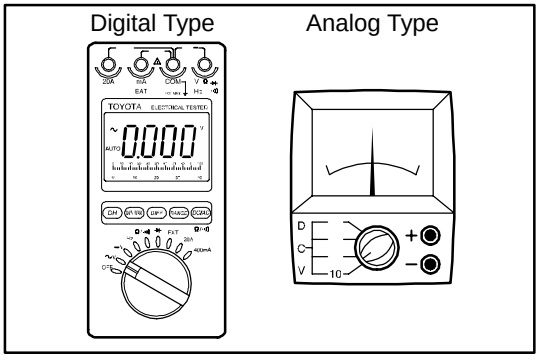

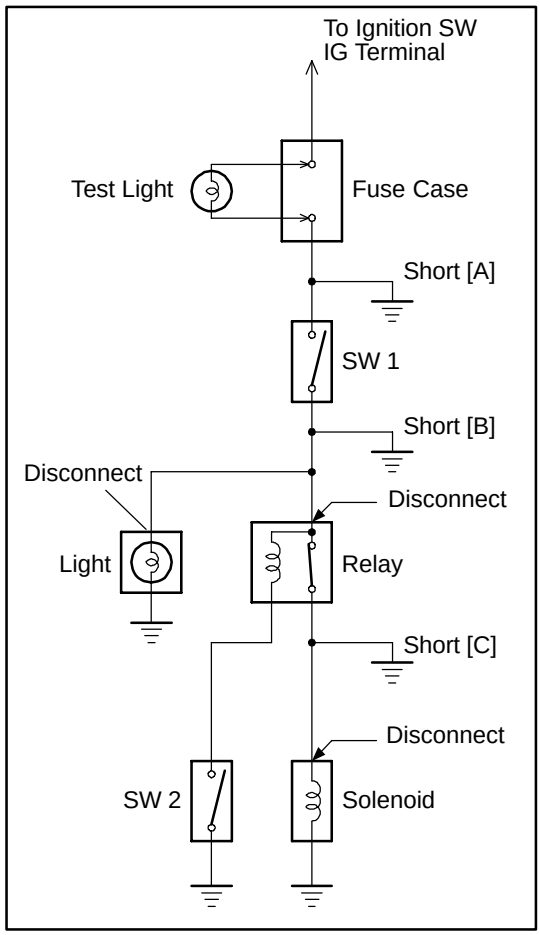

FINDING A SHORT CIRCUIT

(a) Remove the blown fuse and disconnect all loads of the fuse.

(b) Connect a test light in place of the fuse.

(c) Establish conditions in which the test light comes on.

Example:
[A] – Ignition SW on
[B] – Ignition SW and SW 1 on
[C] – Ignition SW, SW 1 and Relay on (Connect the Relay) and SW 2 off (or Disconnect SW 2)

(d) Disconnect and reconnect the connectors while watching the test light.
The short lies between the connector where the test light stays lit and the connector where the light goes out.

(e) Find the exact location of the short by lightly shaking the problem wire along the body.

CAUTION:

(a) Do not open the cover or the case of the ECU unless absolutely necessary. (If the IC terminals are touched, the IC may be destroyed by static electricity.)

(b) When replacing the internal mechanism (ECU part) of the digital meter, be careful that no part of your body or clothing comes in contact with the terminals of leads from the IC, etc. of the replacement part (spare part).

DISCONNECTION OF MALE AND FEMALE CONNECTORS

To pull apart the connectors, pull on the connector itself, not the wire harness.

HINT : Check to see what kind of connector you are disconnecting before pulling apart.

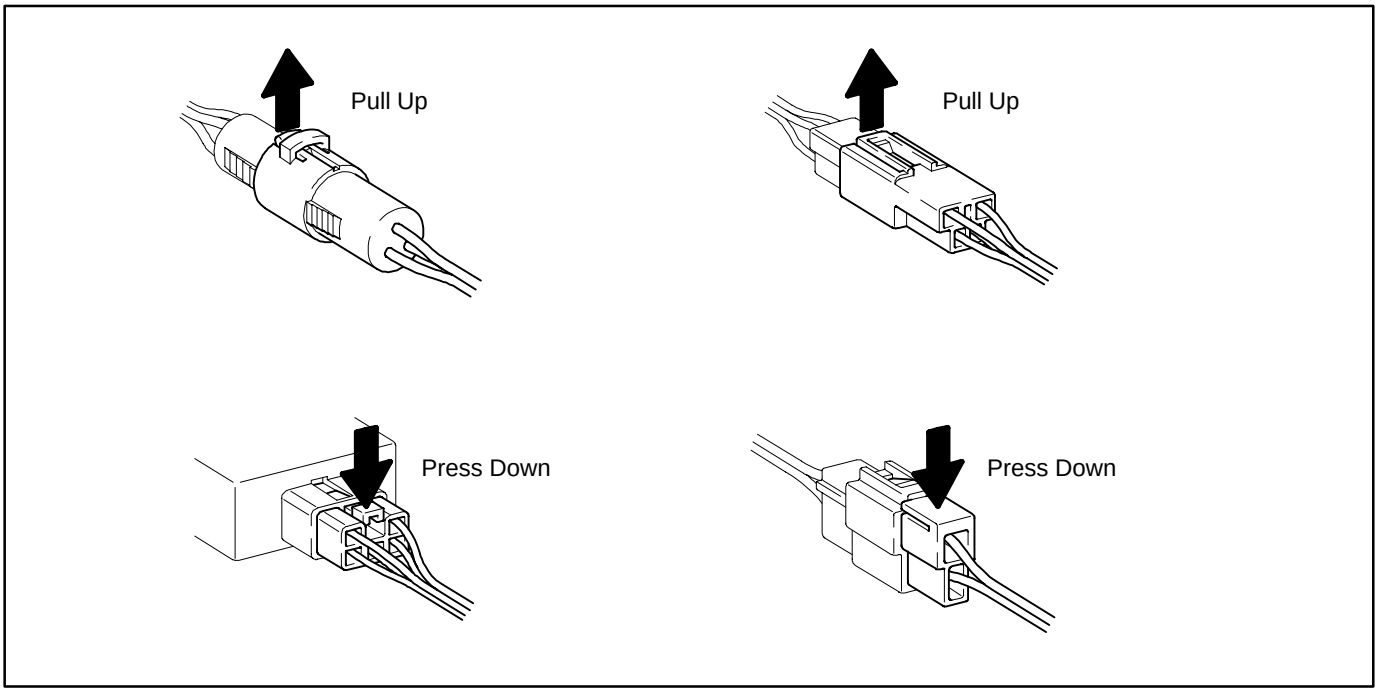

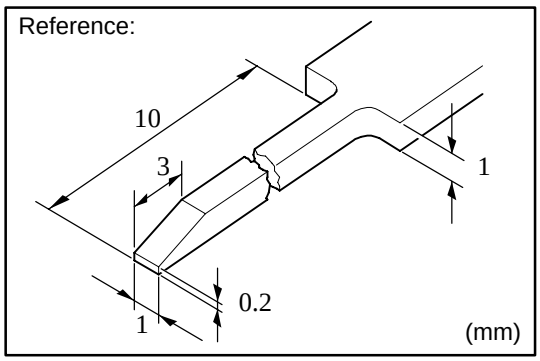

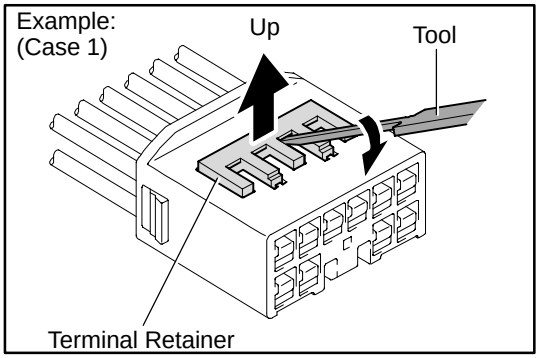

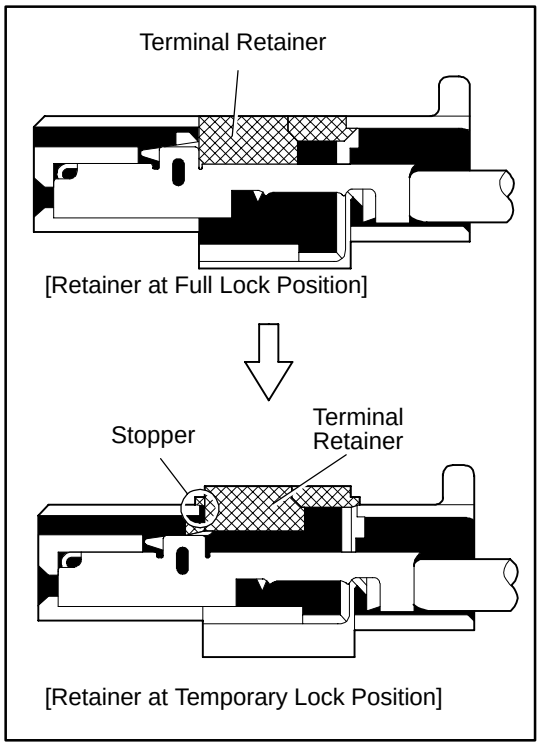

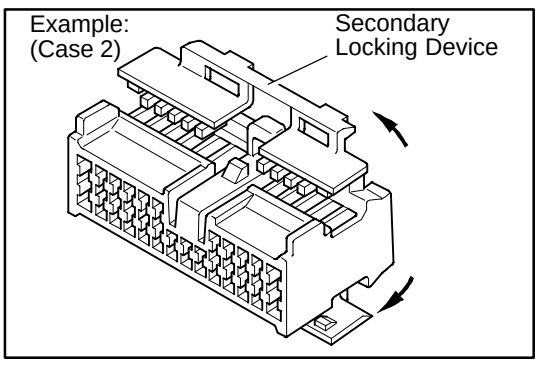

HOW TO REPLACE TERMINAL (with terminal retainer or secondary locking device)

1. PREPARE THE SPECIAL TOOL

   HINT : To remove the terminal from the connector, please construct and use the special tool or like object shown on the left.

2. DISCONNECT CONNECTOR

3. DISENGAGE THE SECONDARY LOCKING DEVICE OR TERMINAL RETAINER.

   (a) Locking device must be disengaged before the terminal locking clip can be released and the terminal removed from the connector.

   (b) Use a special tool or the terminal pick to unlock the secondary locking device or terminal retainer.

   NOTICE:
   Do not remove the terminal retainer from connector body.

   [A] For Non–Waterproof Type Connector

   HINT : The needle insertion position varies according to the connector's shape (number of terminals etc.), so check the position before inserting it.

   "Case 1"

   Raise the terminal retainer up to the temporary lock position.

   "Case 2"

   Open the secondary locking device.

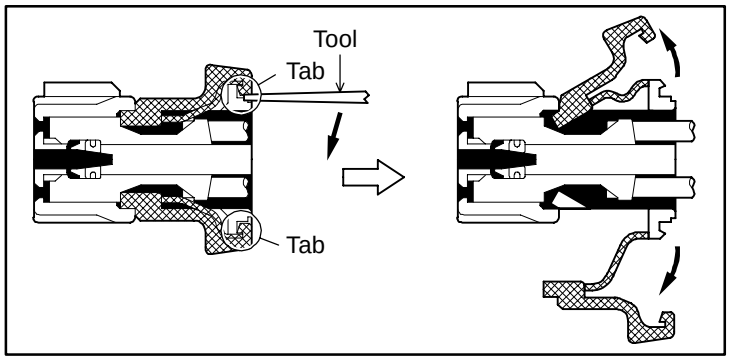

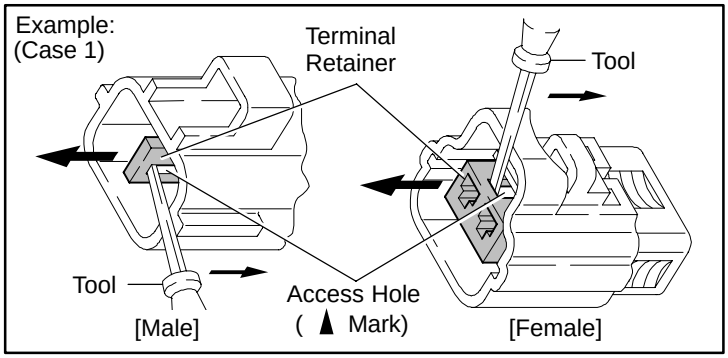

[B] For Waterproof Type Connector

HINT : Terminal retainer color is different according to connector body.

Example:

Terminal Retainer	: Connector Body
Black or White	: Gray
Black or White	: Dark Gray
Gray or White	: Black

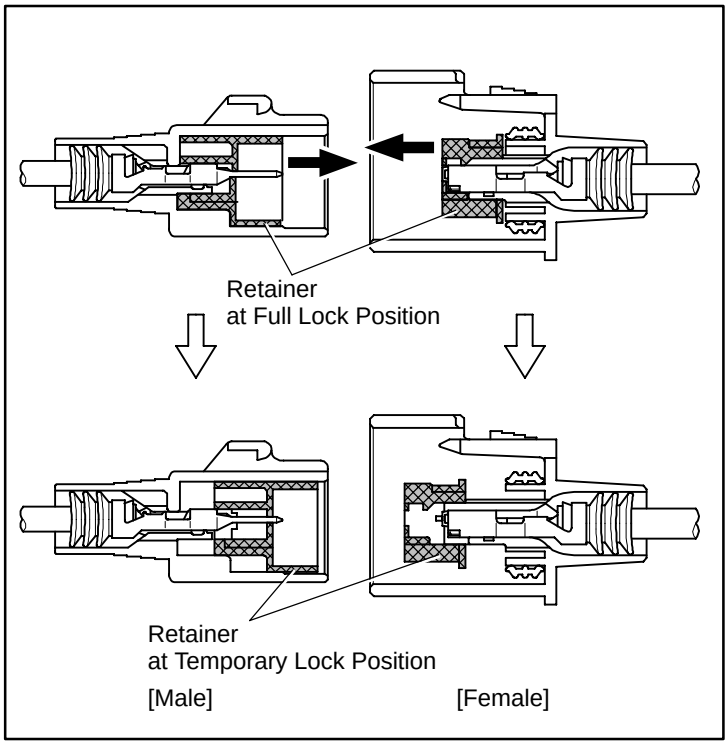

”Case 1”

Type where terminal retainer is pulled up to the temporary lock position (Pull Type).

Insert the special tool into the terminal retainer access hole (▲Mark) and pull the terminal retainer up to the temporary lock position.

HINT : The needle insertion position varies according to the connector’s shape (Number of terminals etc.), so check the position before inserting it.

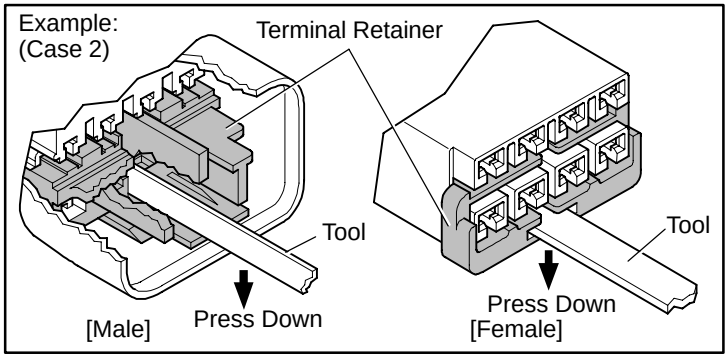

”Case 2”

Type which cannot be pulled as far as Power Lock insert the tool straight into the access hole of terminal retainer as shown.

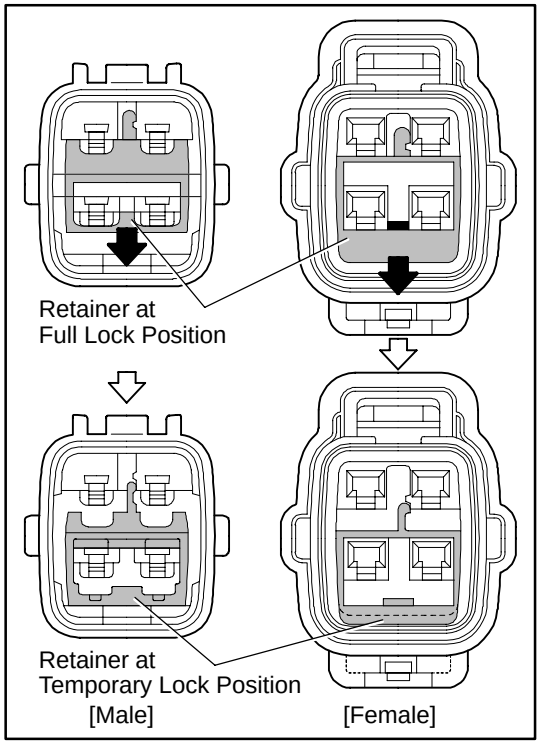

Push the terminal retainer down to the temporary lock position.

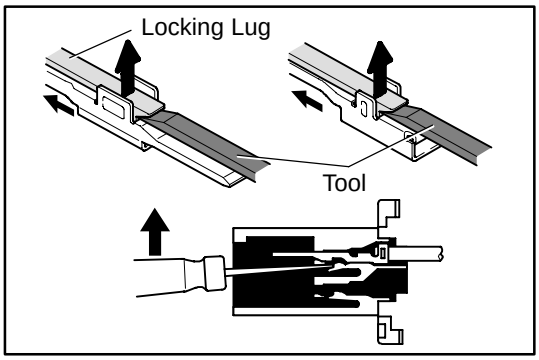

(c) Release the locking lug from terminal and pull the terminal out from rear.

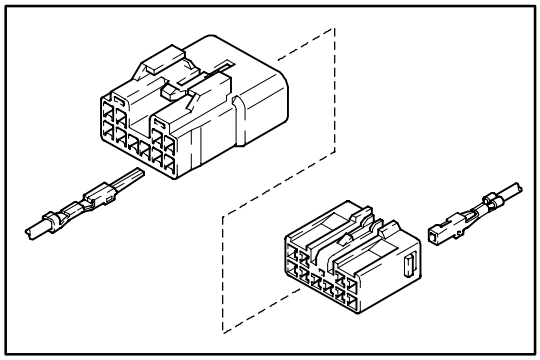

4. INSTALL TERMINAL TO CONNECTOR

(a) Insert the terminal.

HINT:
1. Make sure the terminal is positioned correctly.
2. Insert the terminal until the locking lug locks firmly.
3. Insert the terminal with terminal retainer in the temporary lock position.

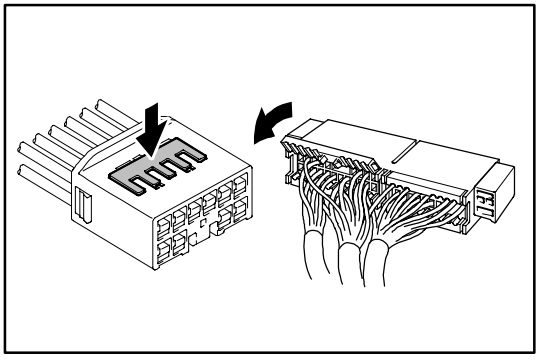

(b) Push the secondary locking device or terminal retainer in to the full lock position.

5. CONNECT CONNECTOR

ABBREVIATIONS

The following abbreviations are used in this manual.

2WD	=	Two Wheel Drive Vehicles
4WD	=	Four Wheel Drive Vehicles
A/C	=	Air Conditioning
A/T	=	Automatic Transmission
ABS	=	Anti–Lock Brake System
ACIS	=	Acoustic Control Induction System
ADD	=	Automatic Disconnecting Differential
COMB.	=	Combination
ECU	=	Electronic Control Unit
ESA	=	Electronic Spark Advance
ETCS–i	=	Electronic Throttle Control System–intelligent
EVAP	=	Evaporative Emission
J/B	=	Junction Block
LH	=	Left–Hand
M/T	=	Manual Transmission
O/D	=	Overdrive
R/B	=	Relay Block
RH	=	Right–Hand
SFI	=	Sequential Multiport Fuel Injection
SRS	=	Supplemental Restraint System
SW	=	Switch
TEMP.	=	Temperature
TVIP	=	TOYOTA Vehicle Intrusion Protection
VSV	=	Vacuum Switching Valve
w/	=	With
w/o	=	Without

* The titles given inside the components are the names of the terminals (terminal codes) and are not treated as being abbreviations.

E GLOSSARY OF TERMS AND SYMBOLS

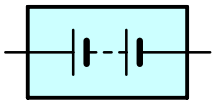

BATTERY
Stores chemical energy and converts it into electrical energy. Provides DC current for the auto's various electrical circuits.

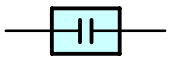

CAPACITOR (Condenser)
A small holding unit for temporary storage of electrical voltage.

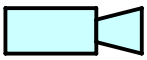

CIGARETTE LIGHTER
An electric resistance heating element.

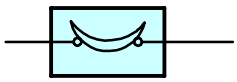

CIRCUIT BREAKER
Basically a reusable fuse, a circuit breaker will heat and open if too much current flows through it. Some units automatically reset when cool, others must be manually reset.



DIODE
A semiconductor which allows current flow in only one direction.



DIODE, ZENER
A diode which allows current flow in one direction but blocks reverse flow only up to a specific voltage. Above that potential, it passes the excess voltage. This acts as a simple voltage regulator.

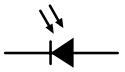

PHOTODIODE
The photodiode is a semiconductor which controls the current flow according to the amount of light.

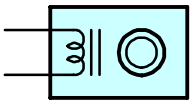

DISTRIBUTOR, IIA
Channels high–voltage current from the ignition coil to the individual spark plugs.

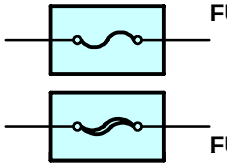

(for Medium Current Fuse)

(for High Current Fuse or Fusible Link)

FUSE
A thin metal strip which burns through when too much current flows through it, thereby stopping current flow and protecting a circuit from damage.

FUSIBLE LINK
A heavy–gauge wire placed in high amperage circuits which burns through on overloads, thereby protecting the circuit. The numbers indicate the crosssection surface area of the wires.



GROUND
The point at which wiring attaches to the Body, thereby providing a return path for an electrical circuit; without a ground, current cannot flow.

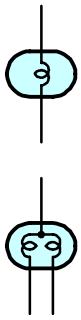

1. SINGLE FILAMENT

2. DOUBLE FILAMENT

HEADLIGHTS
Current flow causes a headlight filament to heat up and emit light. A headlight may have either a single (1) filament or a double (2) filament

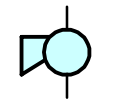

HORN
An electric device which sounds a loud audible signal.

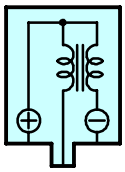

IGNITION COIL
Converts low–voltage DC current into high–voltage ignition current for firing the spark plugs.



LIGHT
Current flow through a filament causes the filament to heat up and emit light.



LED (LIGHT EMITTING DIODE)
Upon current flow, these diodes emit light without producing the heat of a comparable light.



METER, ANALOG
Current flow activates a magnetic coil which causes a needle to move, thereby providing a relative display against a background calibration.



METER, DIGITAL
Current flow activates one or many LED's, LCD's, or fluorescent displays, which provide a relative or digital display.



MOTOR
A power unit which converts electrical energy into mechanical energy, especially rotary motion.

RELAY

Basically, an electrically operated switch which may be normally closed (1) or open (2). Current flow through a small coil creates a magnetic field which either opens or closes an attached switch.

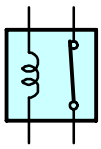

1. NORMALLY CLOSED

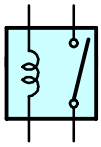

2. NORMALLY OPEN

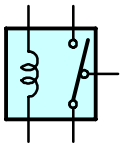

RELAY, DOUBLE THROW

A relay which passes current through one set of contacts or the other.

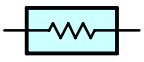

RESISTOR

An electrical component with a fixed resistance, placed in a circuit to reduce voltage to a specific value.

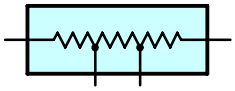

RESISTOR, TAPPED

A resistor which supplies two or more different non adjustable resistance values.



RESISTOR, VARIABLE or RHEOSTAT

A controllable resistor with a variable rate of resistance.
Also called a potentiometer or rheostat.

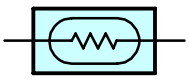

SENSOR (Thermistor)

A resistor which varies its resistance with temperature.

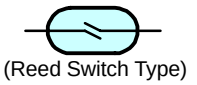

(Reed Switch Type)

SENSOR, SPEED

Uses magnetic impulses to open and close a switch to create a signal for activation of other components.

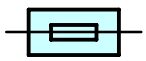

SHORT PIN

Used to provide an unbroken connection within a junction block.

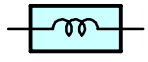

SOLENOID

An electromagnetic coil which forms a magnetic field when current flows, to move a plunger, etc.

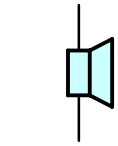

SPEAKER

An electromechanical device which creates sound waves from current flow.

SWITCH, MANUAL

Opens and closes circuits, thereby stopping (1) or allowing (2) current flow.

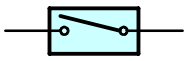

1. NORMALLY OPEN

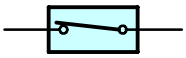

2. NORMALLY CLOSED

SWITCH, DOUBLE THROW

A switch which continuously passes current through one set of contacts or the other.

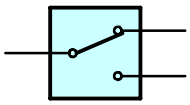

SWITCH, IGNITION

A key operated switch with several positions which allows various circuits, particularly the primary ignition circuit, to become operational.

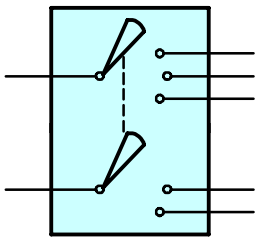

SWITCH, WIPER PARK

Automatically returns wipers to the stop position when the wiper switch is turned off.

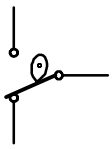

TRANSISTOR

A solidstate device typically used as an electronic relay; stops or passes current depending on the voltage applied at "base".

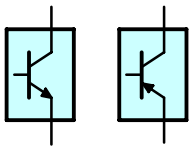

WIRES

Wires are always drawn as straight lines on wiring diagrams.
Crossed wires (1) without a black dot at the junction are not joined;
crossed wires (2) with a black dot or octagonal ( ) mark at the junction are spliced (joined) connections.

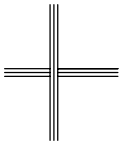

(1) NOT CONNECTED

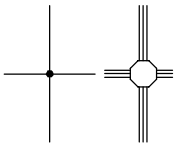

(2) SPLICED

F RELAY LOCATIONS

[Engine Compartment]

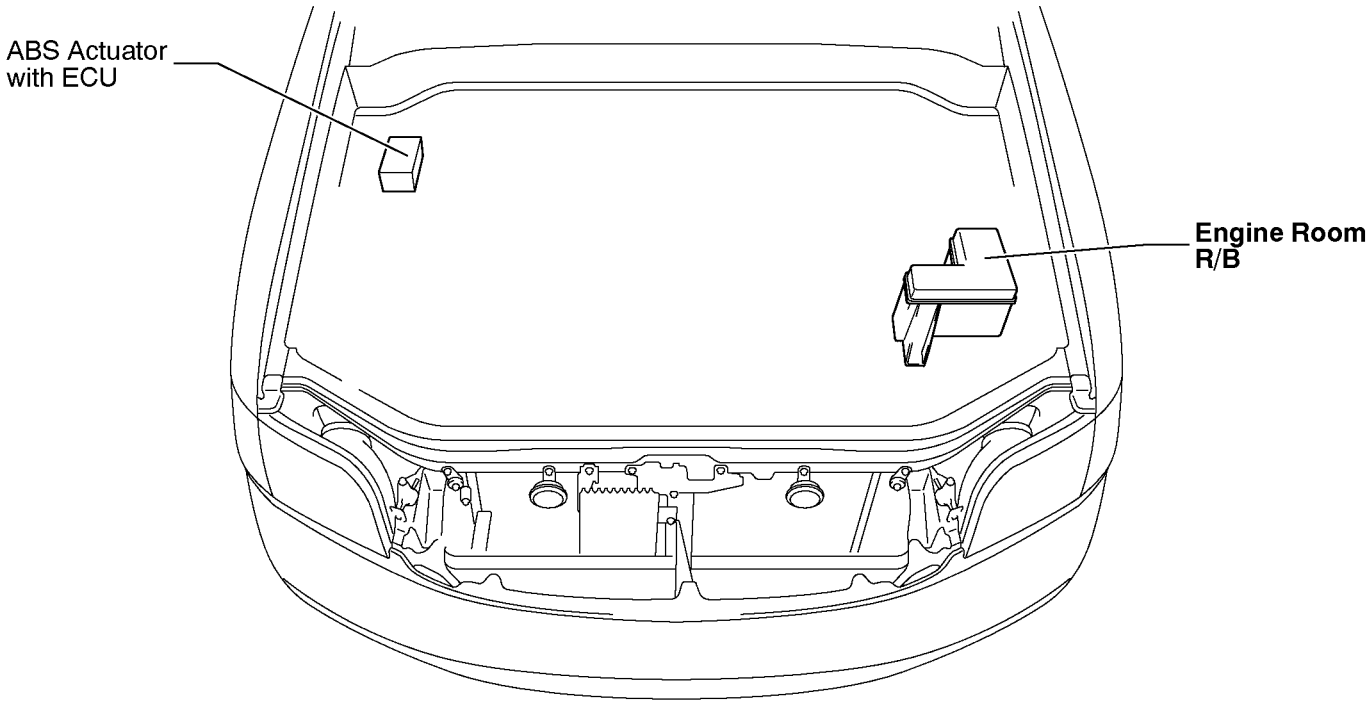

[Instrument Panel]

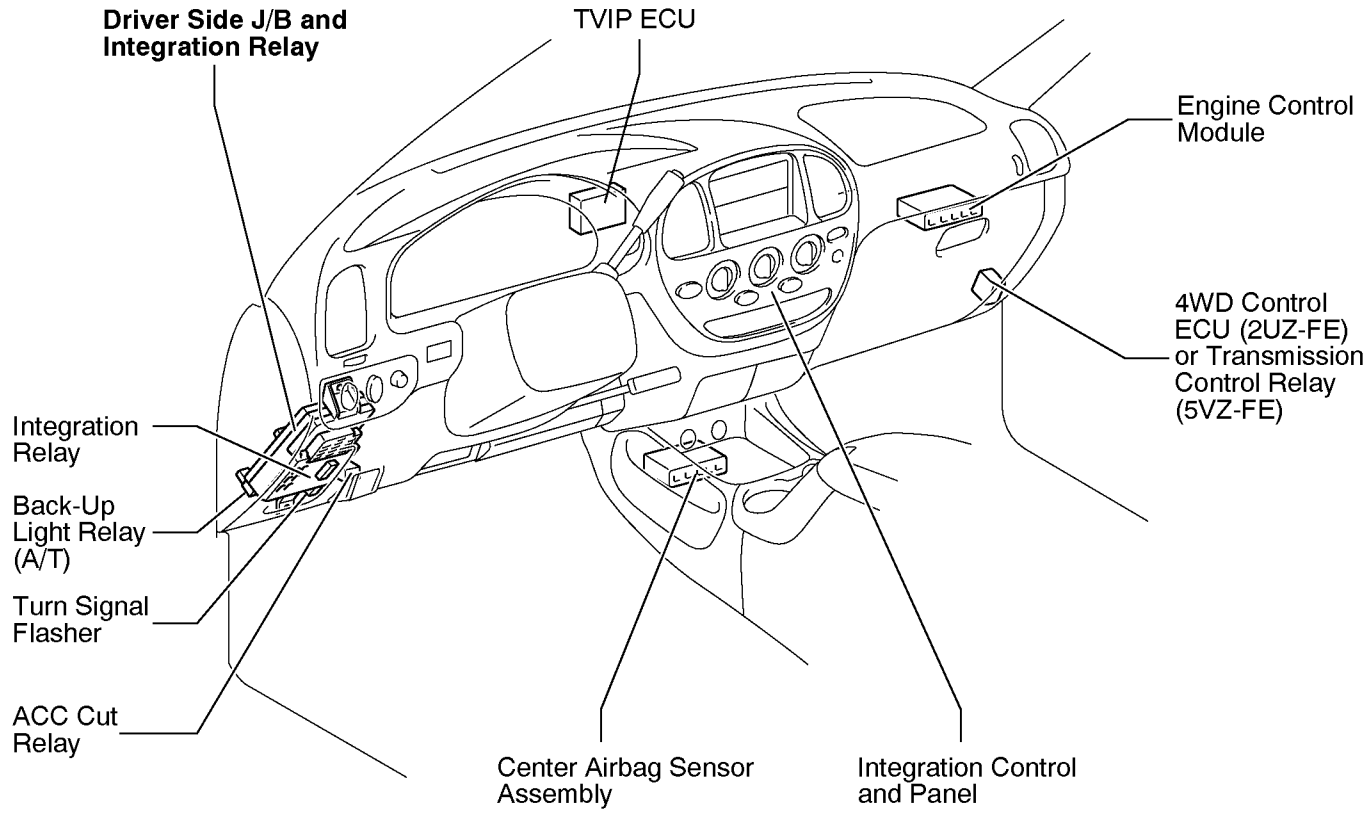

② : Engine Room R/B

Engine Compartment Left (See Page 20)

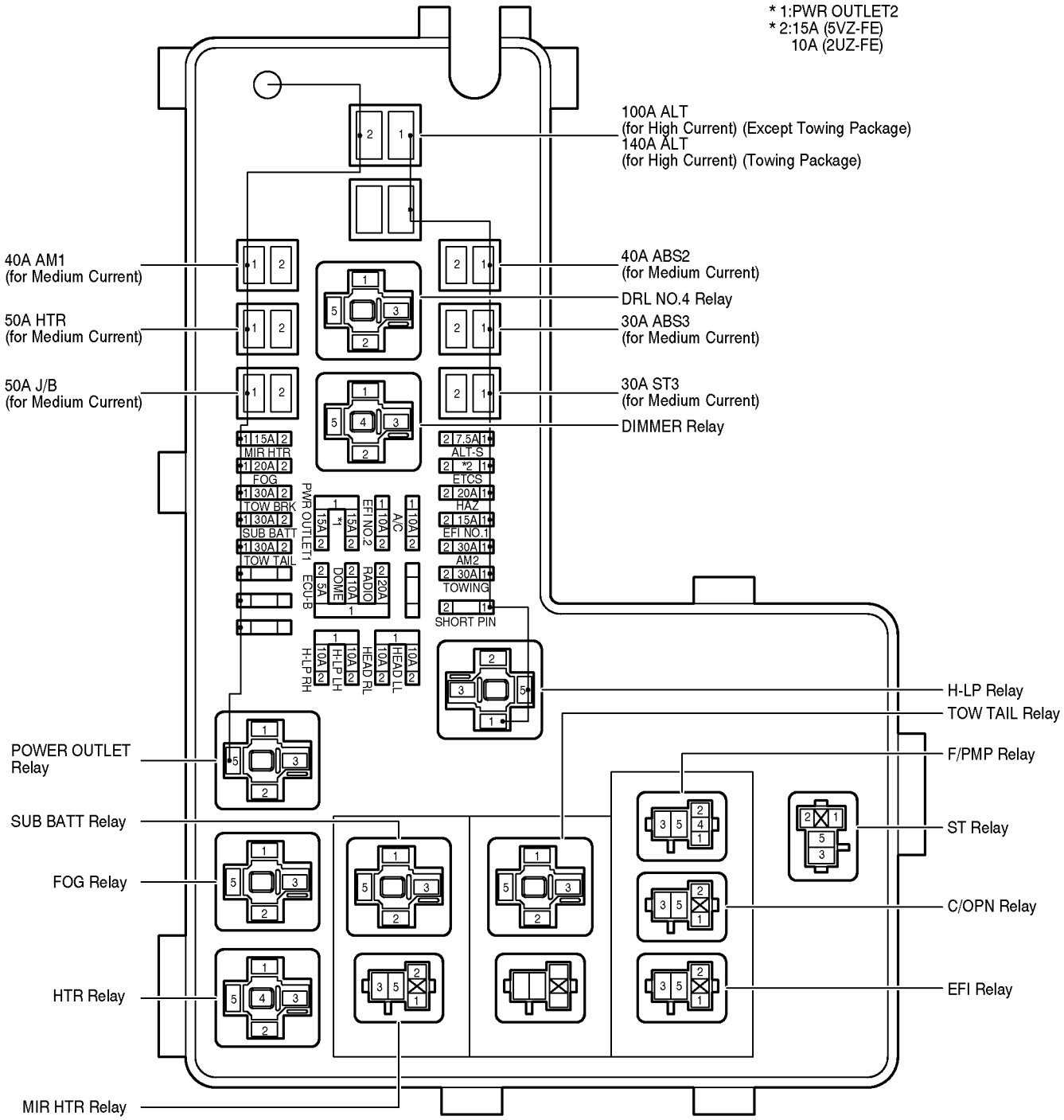

F RELAY LOCATIONS

: Driver Side J/B and Integration Relay	Lower Finish Panel (See Page 20)

[w/o Daytime Running Light]

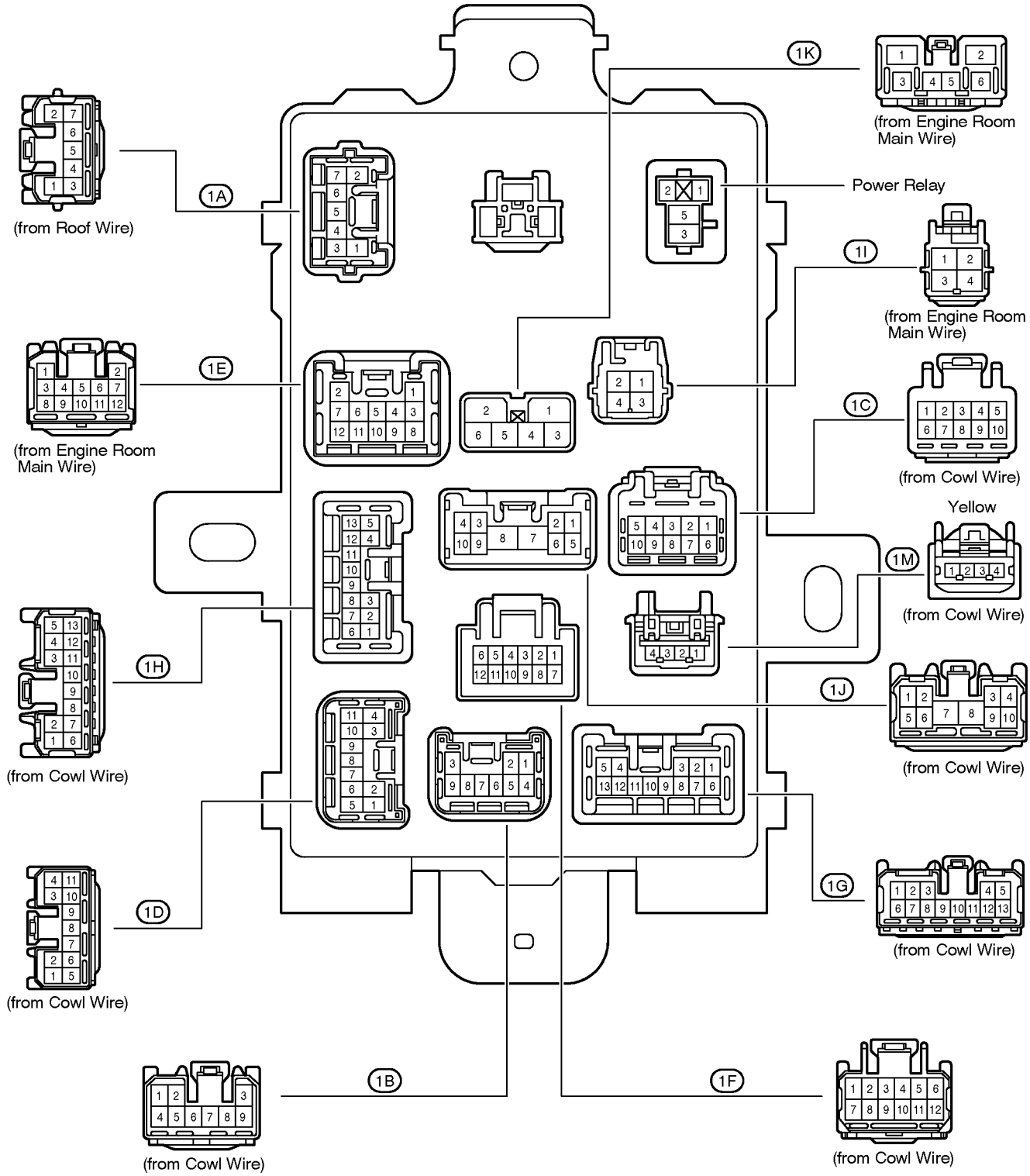

* 1:Towing Package

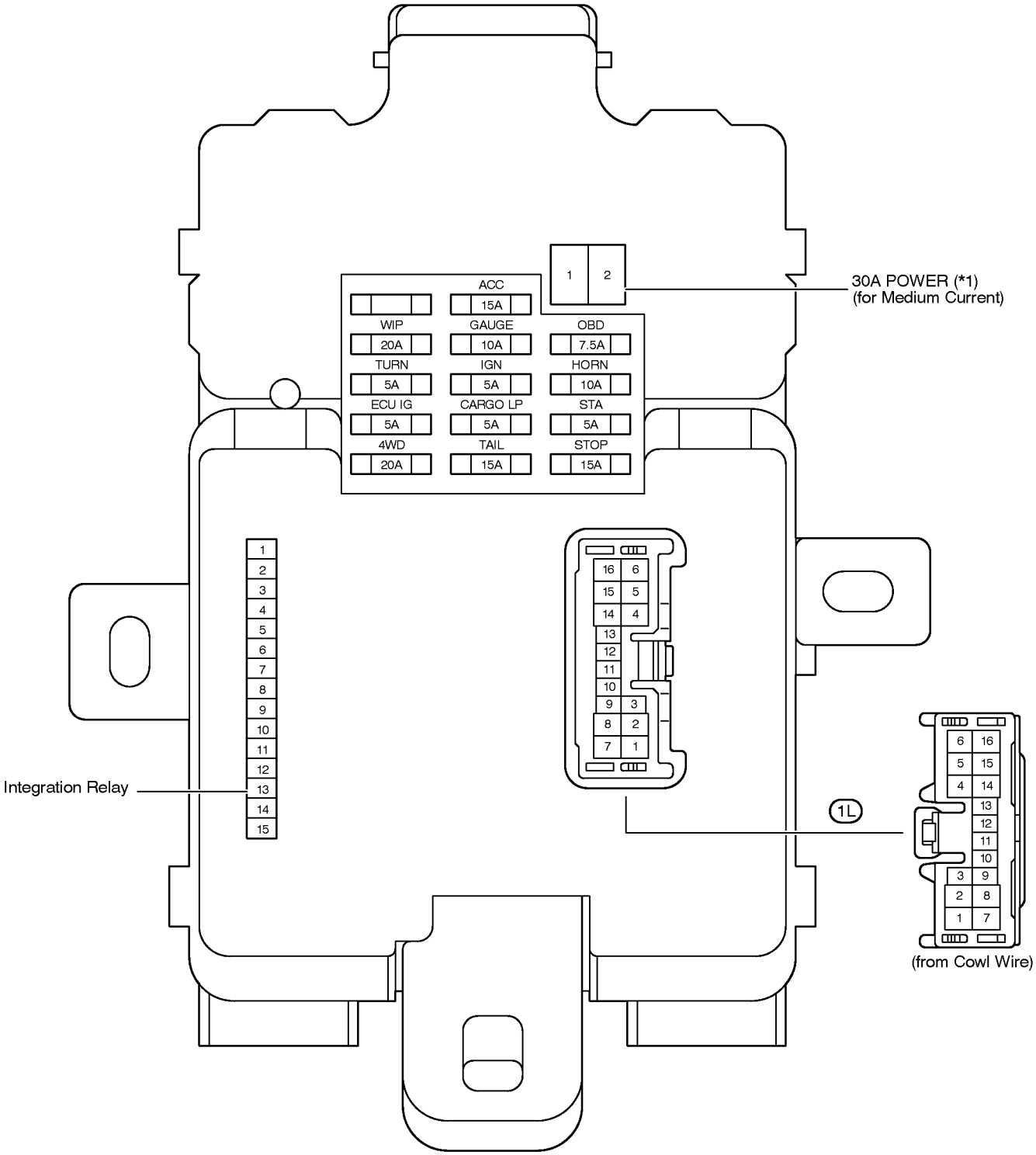

[Driver Side J/B and Integration Relay Inner Circuit] (w/o Daytime Running Light)

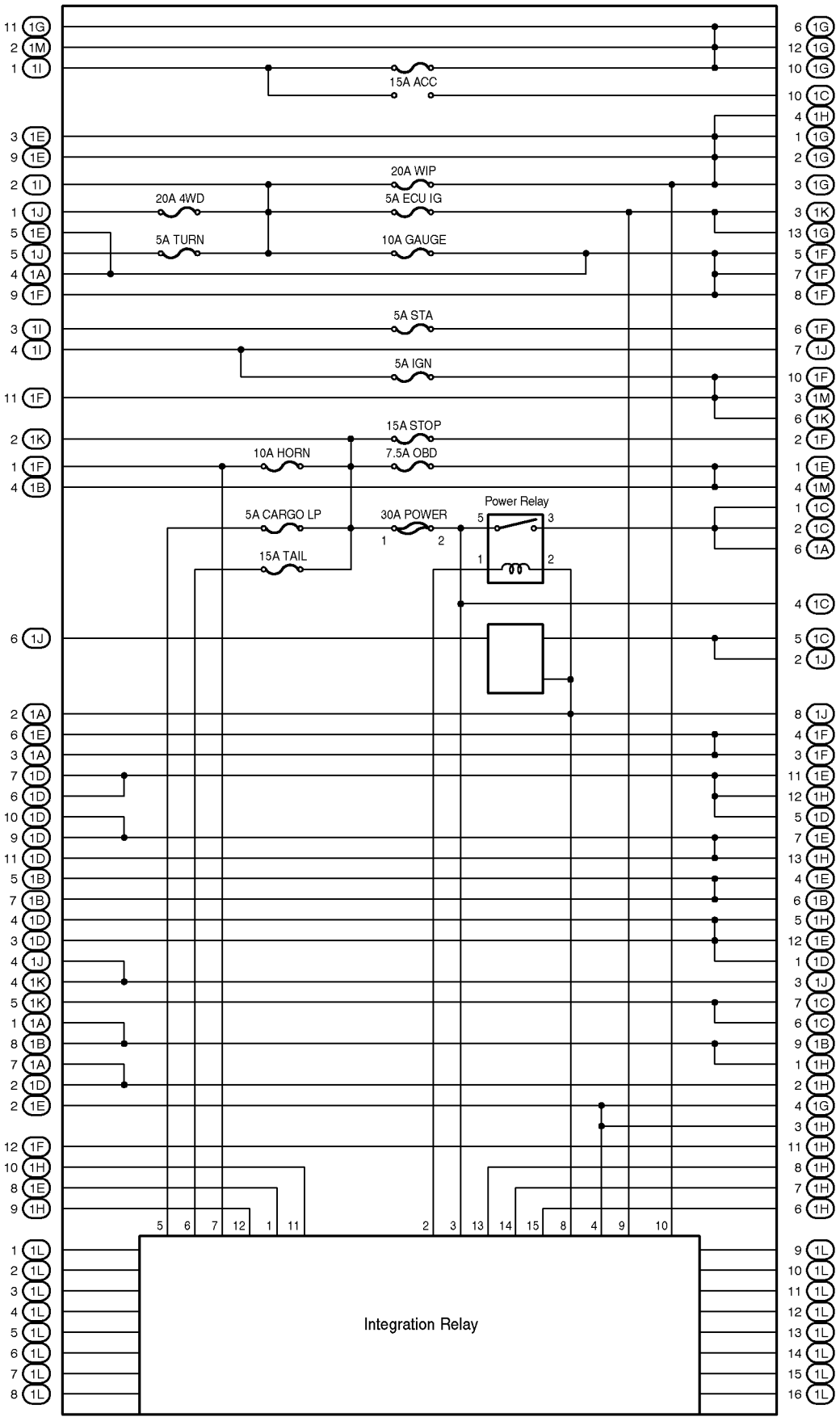

F RELAY LOCATIONS

: Driver Side J/B and Integration Relay	Lower Finish Panel (See Page 20)

[w/ Daytime Running Light]

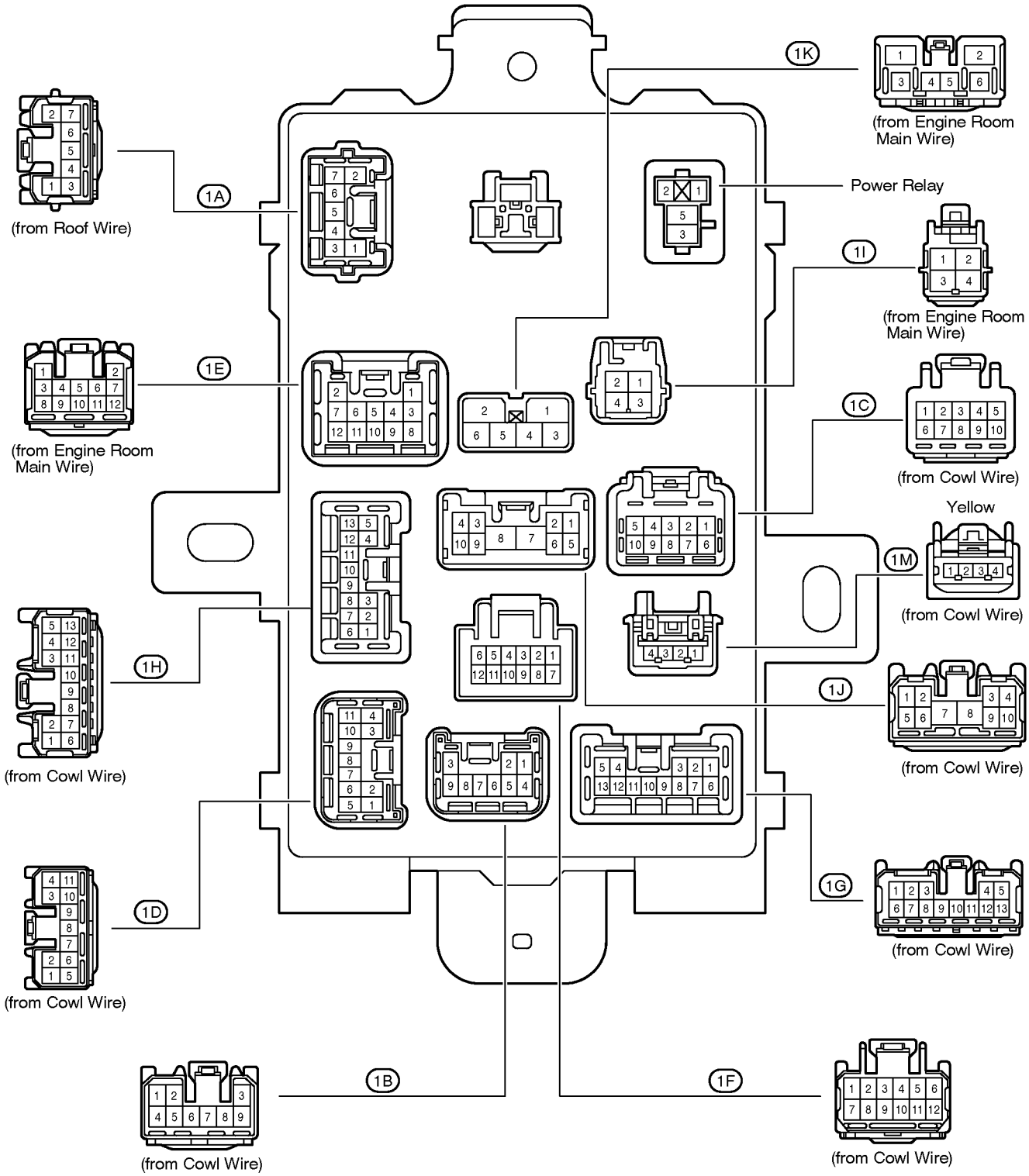

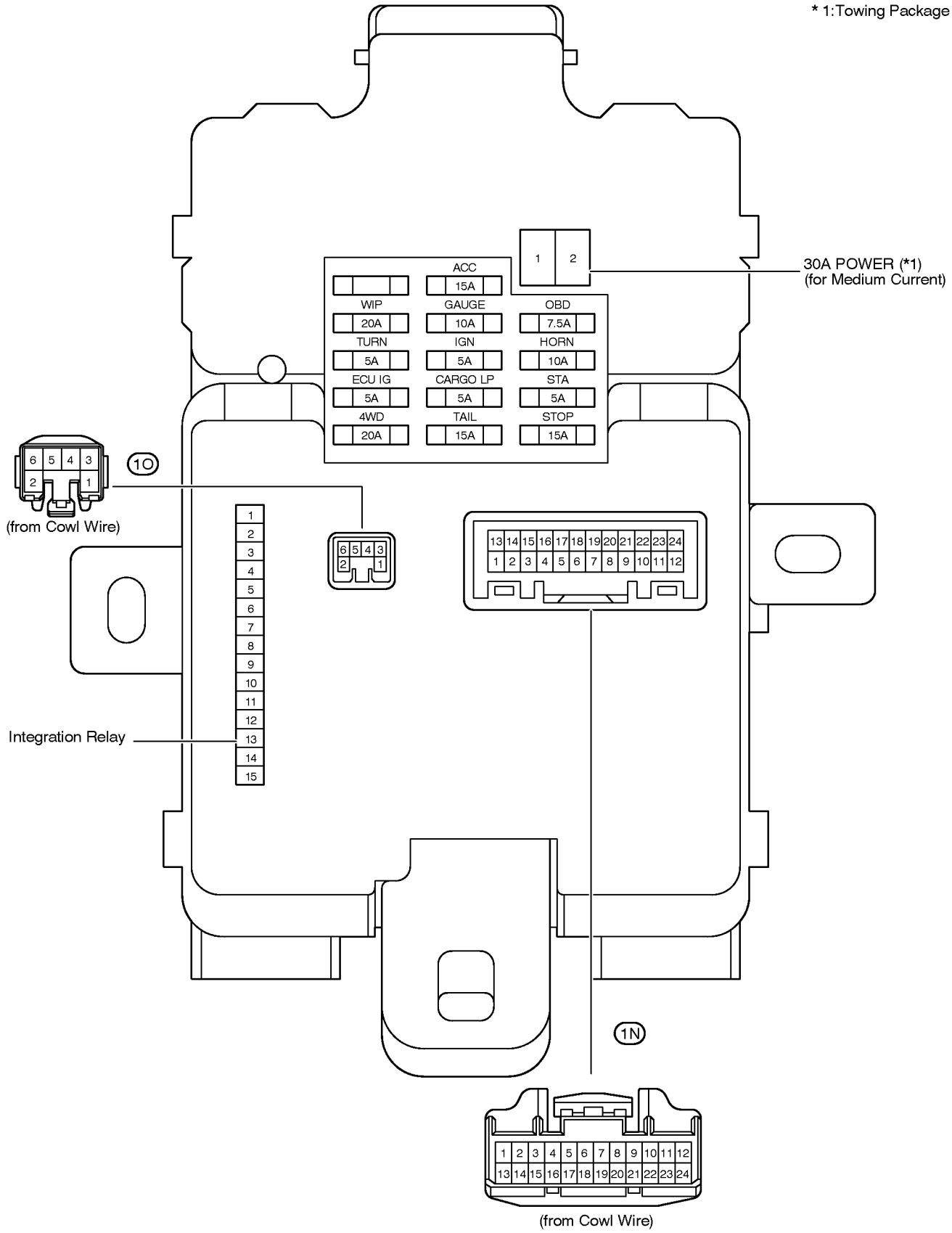
* 1:Towing Package
30A POWER (*1)
(for Medium Current)
1
2
ACC
15A
WIP
20A
GAUGE
10A
OBD
7.5A
TURN
5A
IGN
5A
HORN
10A
ECU IG
5A
CARGO LP
5A
STA
5A
4WD
20A
TAIL
15A
STOP
15A
6 5 4 3
2 1
1O
(from Cowl Wire)
1
2
3
4
5
6
7
8
9
10
11
12
13
14
15
Integration Relay
6 5 4 3
2 1
13 14 15 16 17 18 19 20 21 22 23 24
1 2 3 4 5 6 7 8 9 10 11 12
1N
1 2 3 4 5 6 7 8 9 10 11 12
13 14 15 16 17 18 19 20 21 22 23 24
(from Cowl Wire)

[Driver Side J/B and Integration Relay Inner Circuit] (w/ Daytime Running Light)

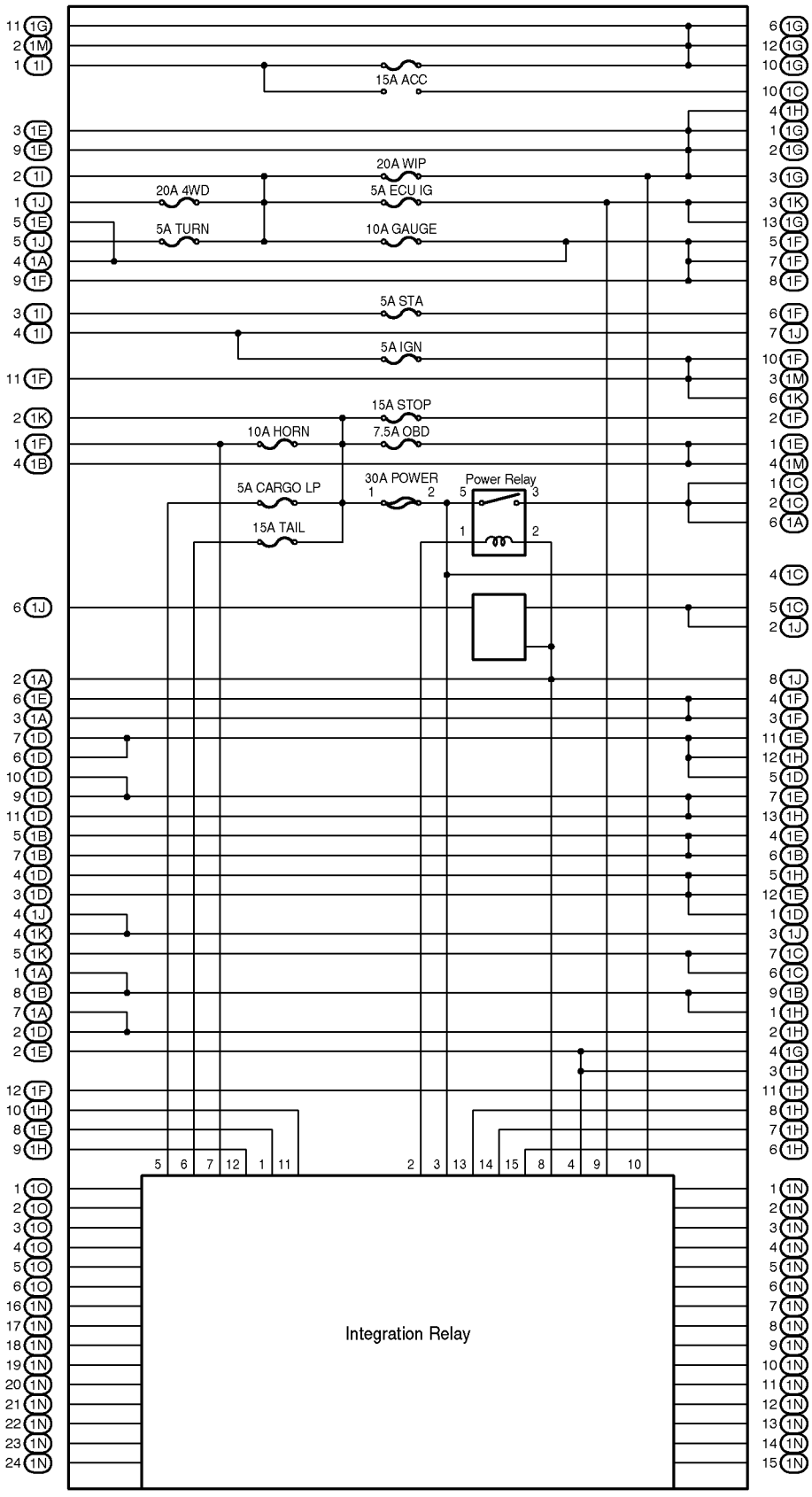

▭ : Location of Connector Joining Wire Harness and Wire Harness

▽ : Location of Ground Points

[2UZ–FE]

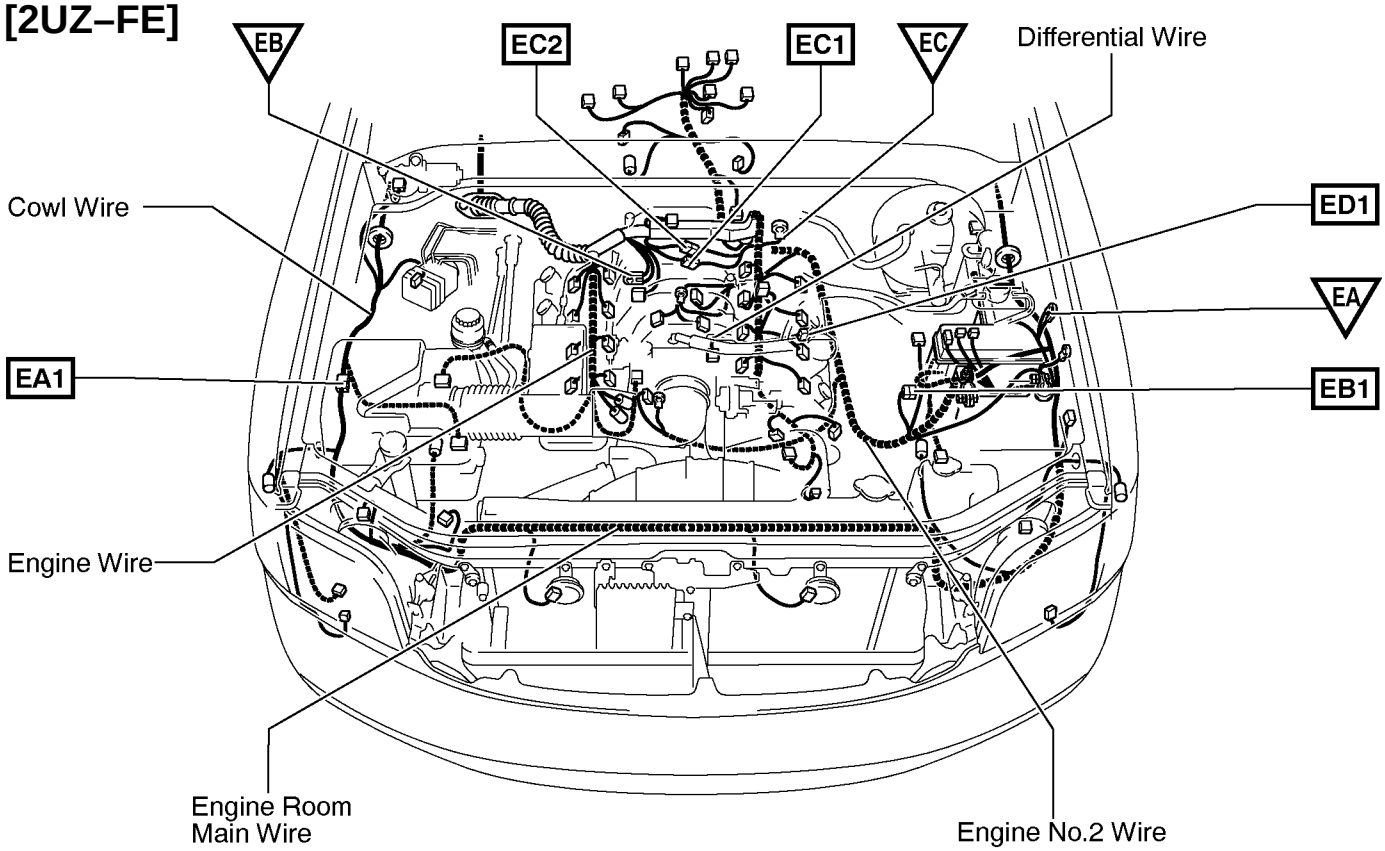

⬡ : Location of Splice Points

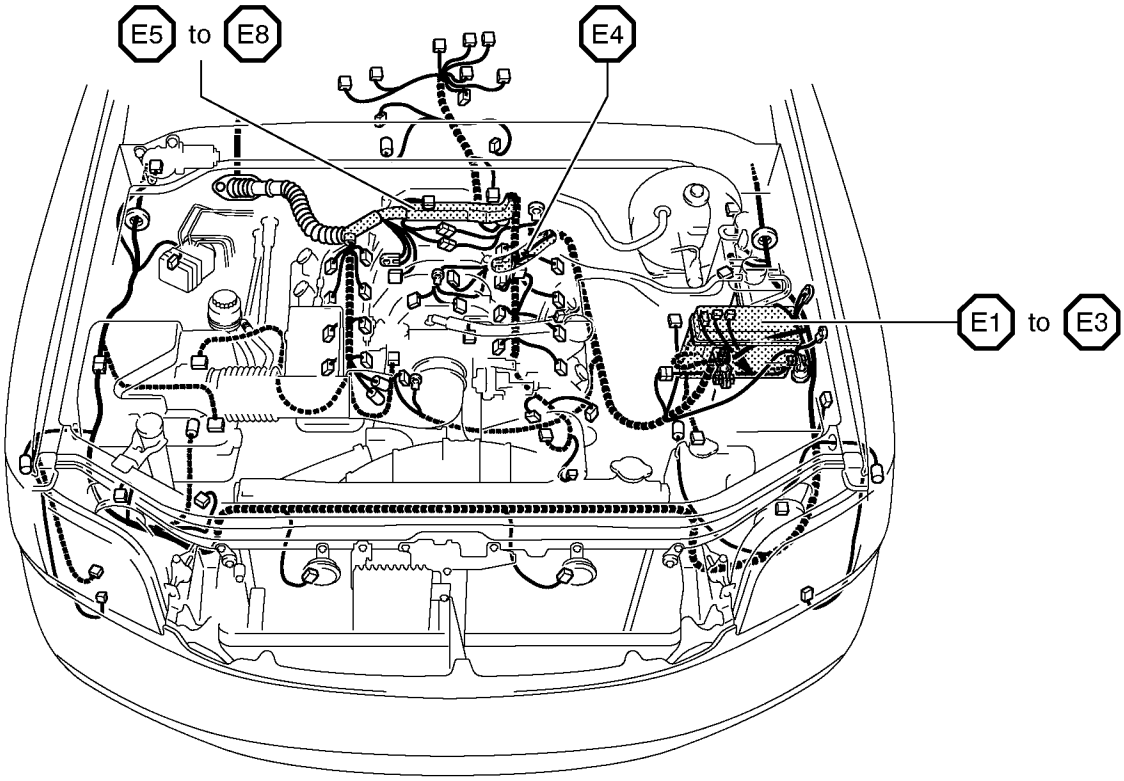

Connector Joining Wire Harness and Wire Harness

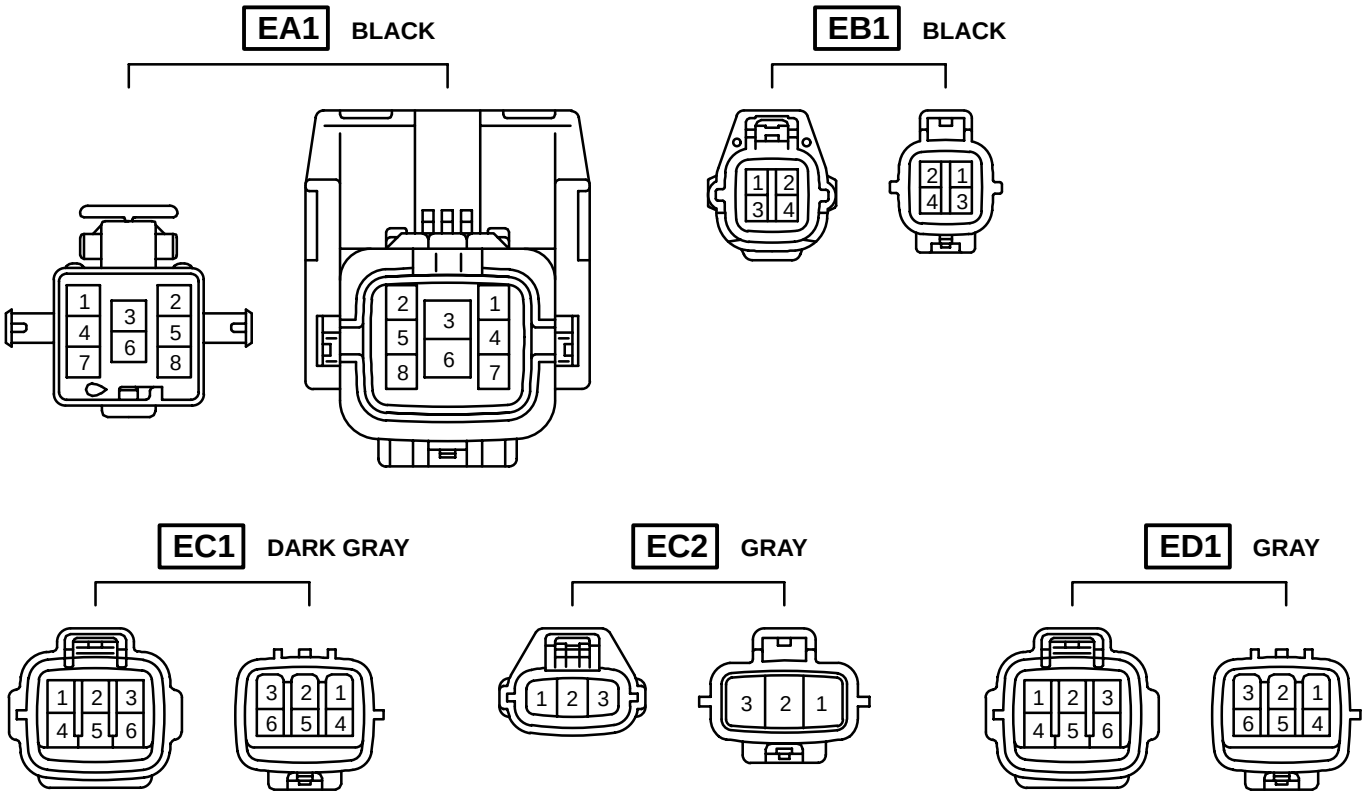

Code	Joining Wire Harness and Wire Harness (Connector Location)
EA1	Cowl Wire and Engine Room Main Wire (Right Fender)
EB1	Engine No.2 Wire and Engine Room Main Wire (Under the Engine Room R/B)
EC1	Engine No.2 Wire and Engine Wire (Near the Starter)
EC2	
ED1	Engine No.2 Wire and Differential Wire (Near the Transmission)

: Location of Connector Joining Wire Harness and Wire Harness
: Location of Ground Points

[5VZ–FE]

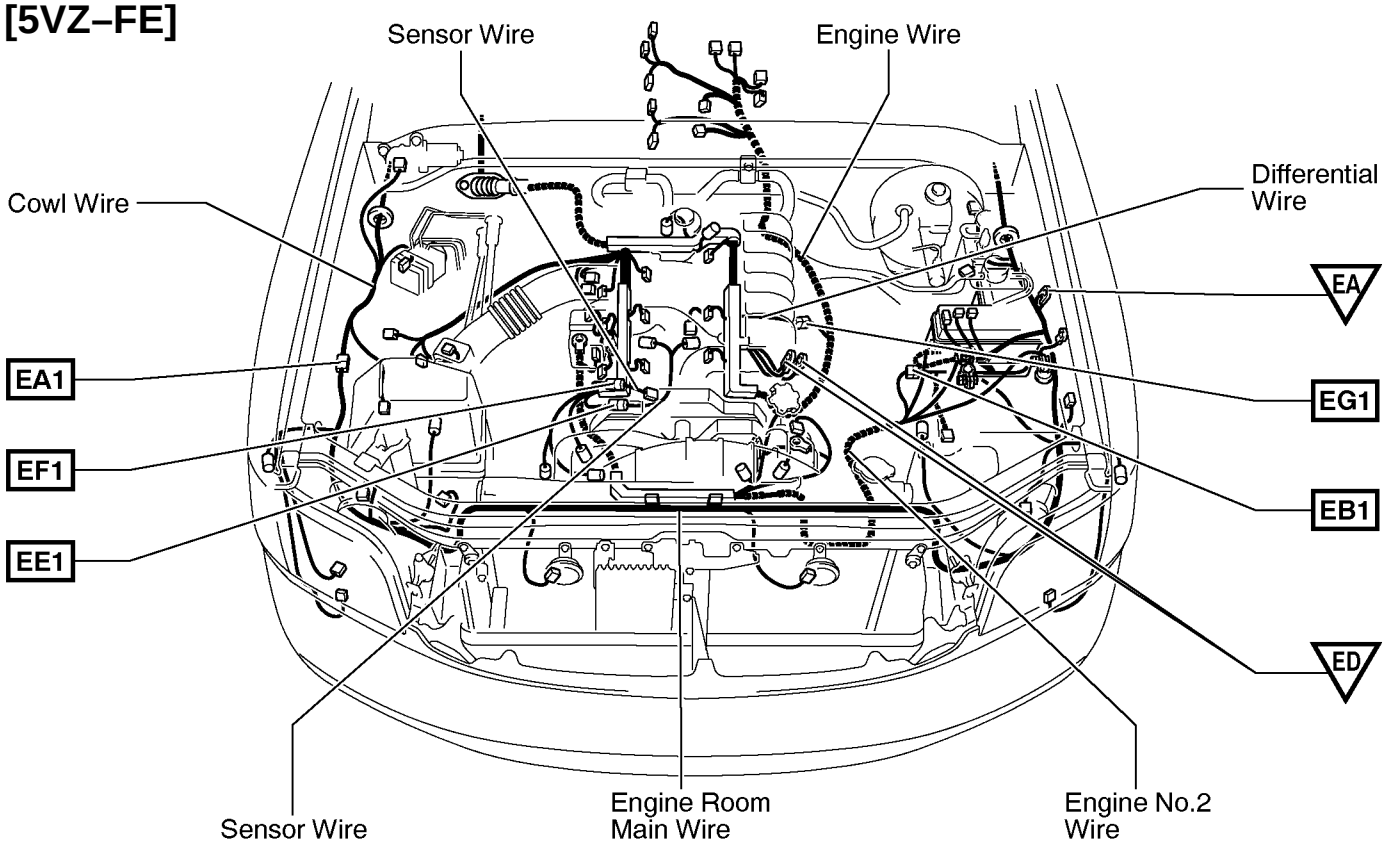

: Location of Splice Points

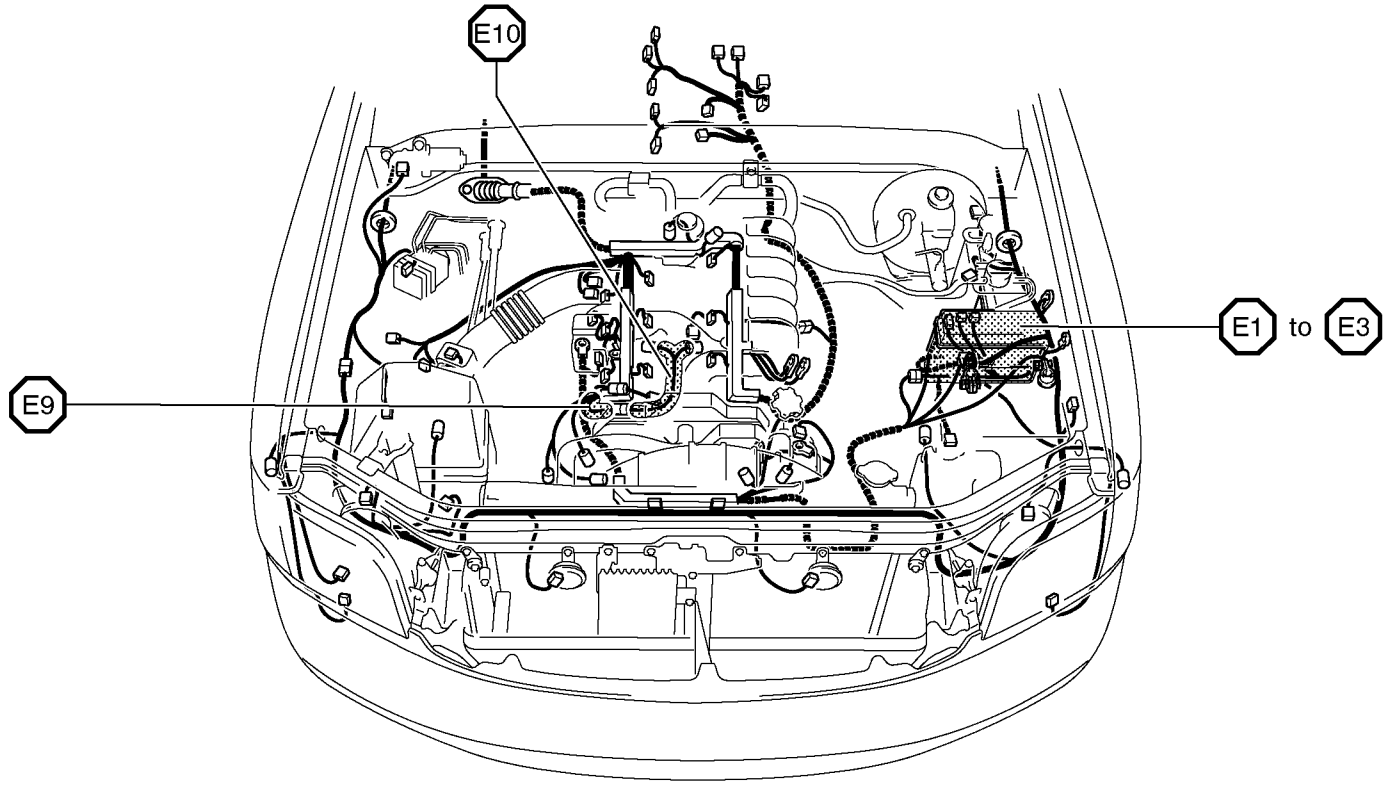

Connector Joining Wire Harness and Wire Harness

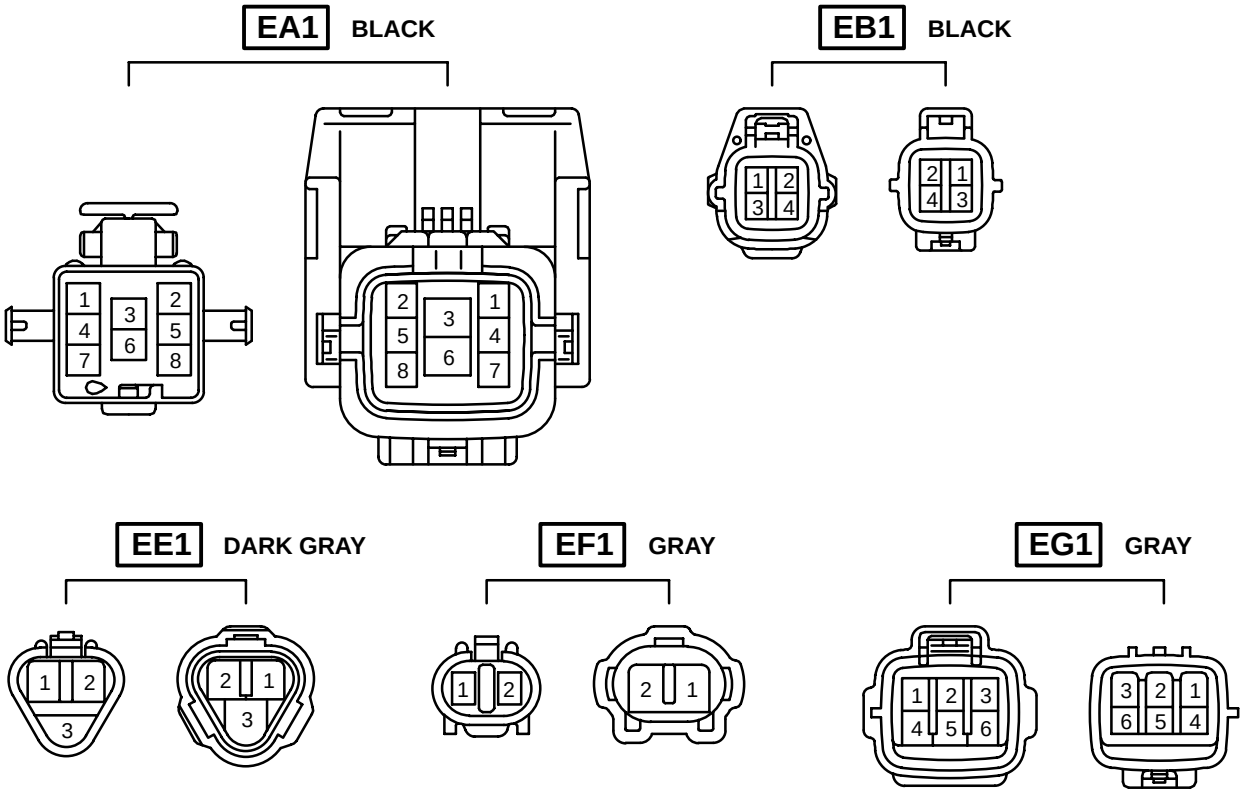

Code	Joining Wire Harness and Wire Harness (Connector Location)
EA1	Cowl Wire and Engine Room Main Wire (Right Fender)
EB1	Engine No.2 Wire and Engine Room Main Wire (Under the Engine Room R/B)
EE1	Sensor Wire and Engine Wire (Over the Cylinder Head)
EF1	Engine Wire and Sensor Wire (Over the Cylinder Head)
EG1	Engine Wire and Differential Wire (Front Differential Upper Side)

▭ : Location of Connector Joining Wire Harness and Wire Harness

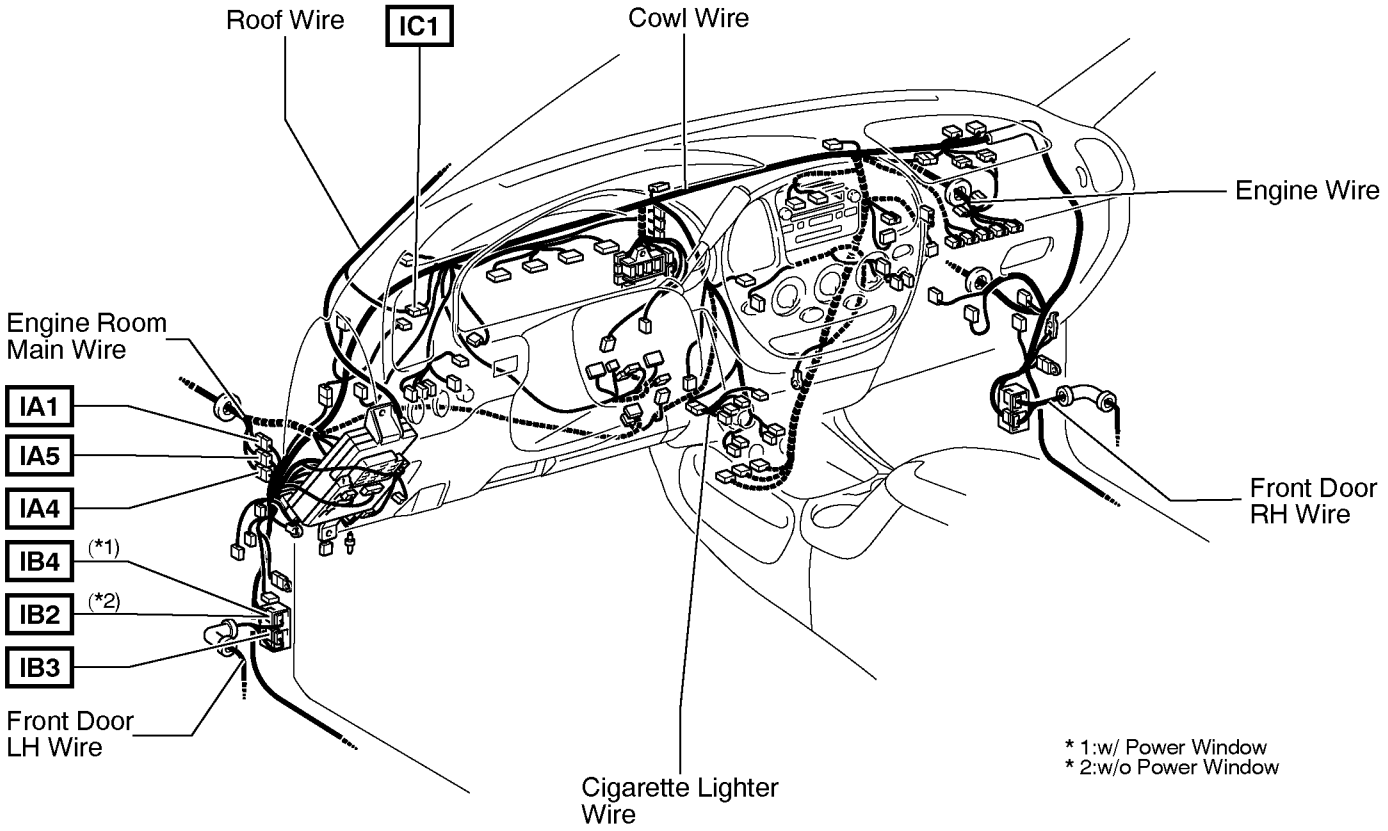

▽ : Location of Ground Points

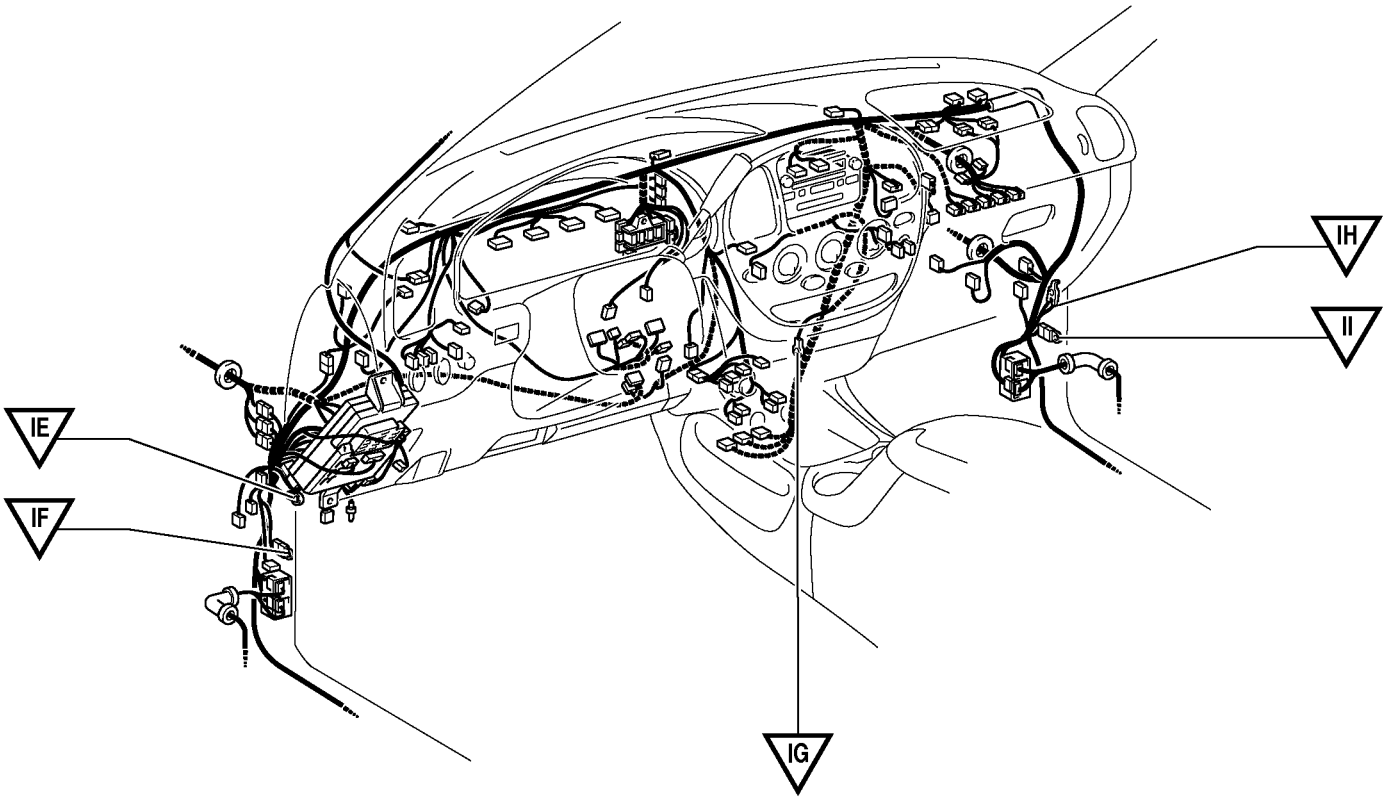

Connector Joining Wire Harness and Wire Harness

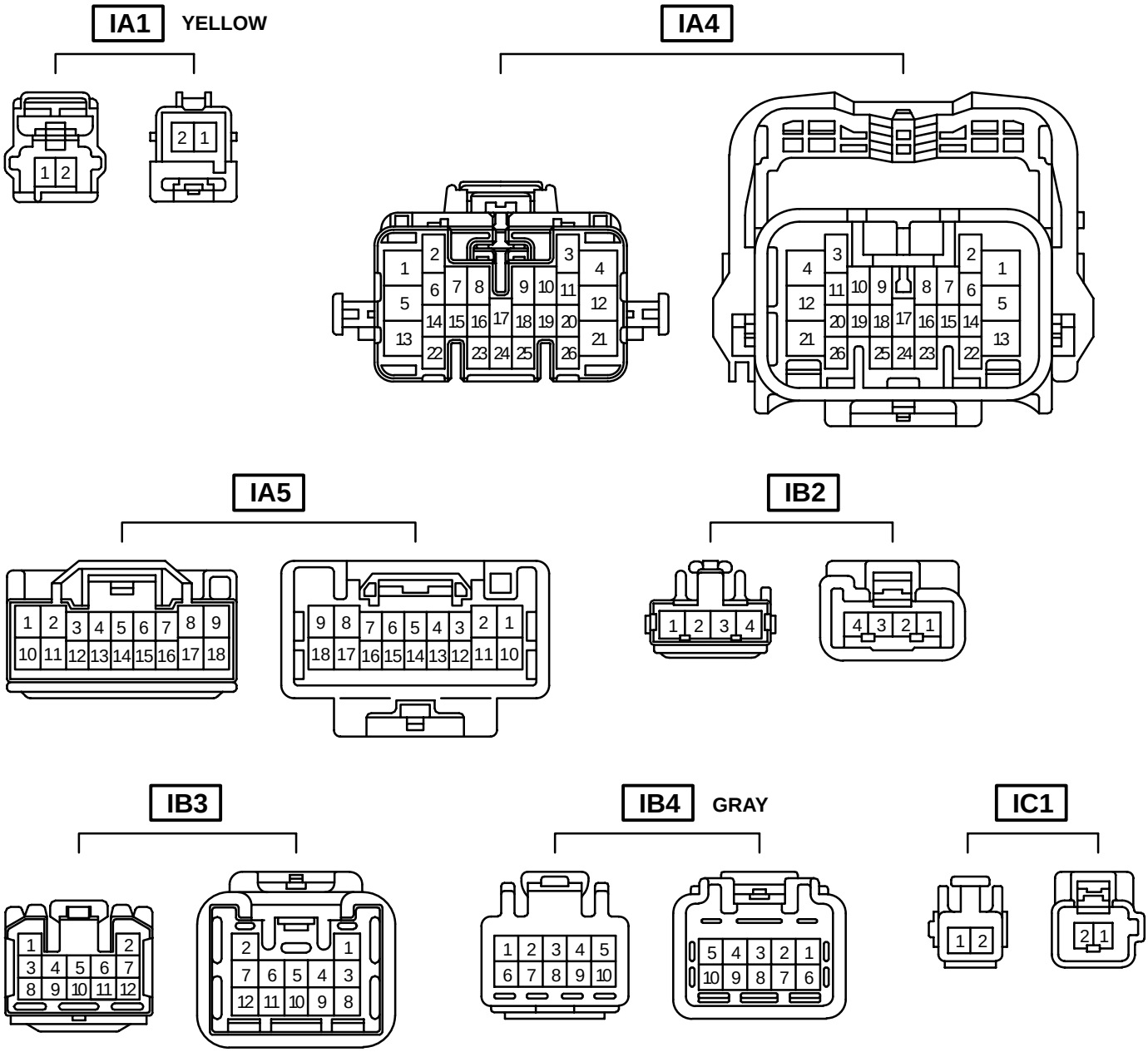

Code	Joining Wire Harness and Wire Harness (Connector Location)
IA1	Engine Room Main Wire and Cowl Wire (Left Kick Panel)
IA4	
IA5	
IB2	Front Door LH Wire and Cowl Wire (Left Kick Panel)
IB3	
IB4	
IC1	Cowl Wire and Roof Wire (Left Side of Instrument Panel)

▭ : Location of Connector Joining Wire Harness and Wire Harness

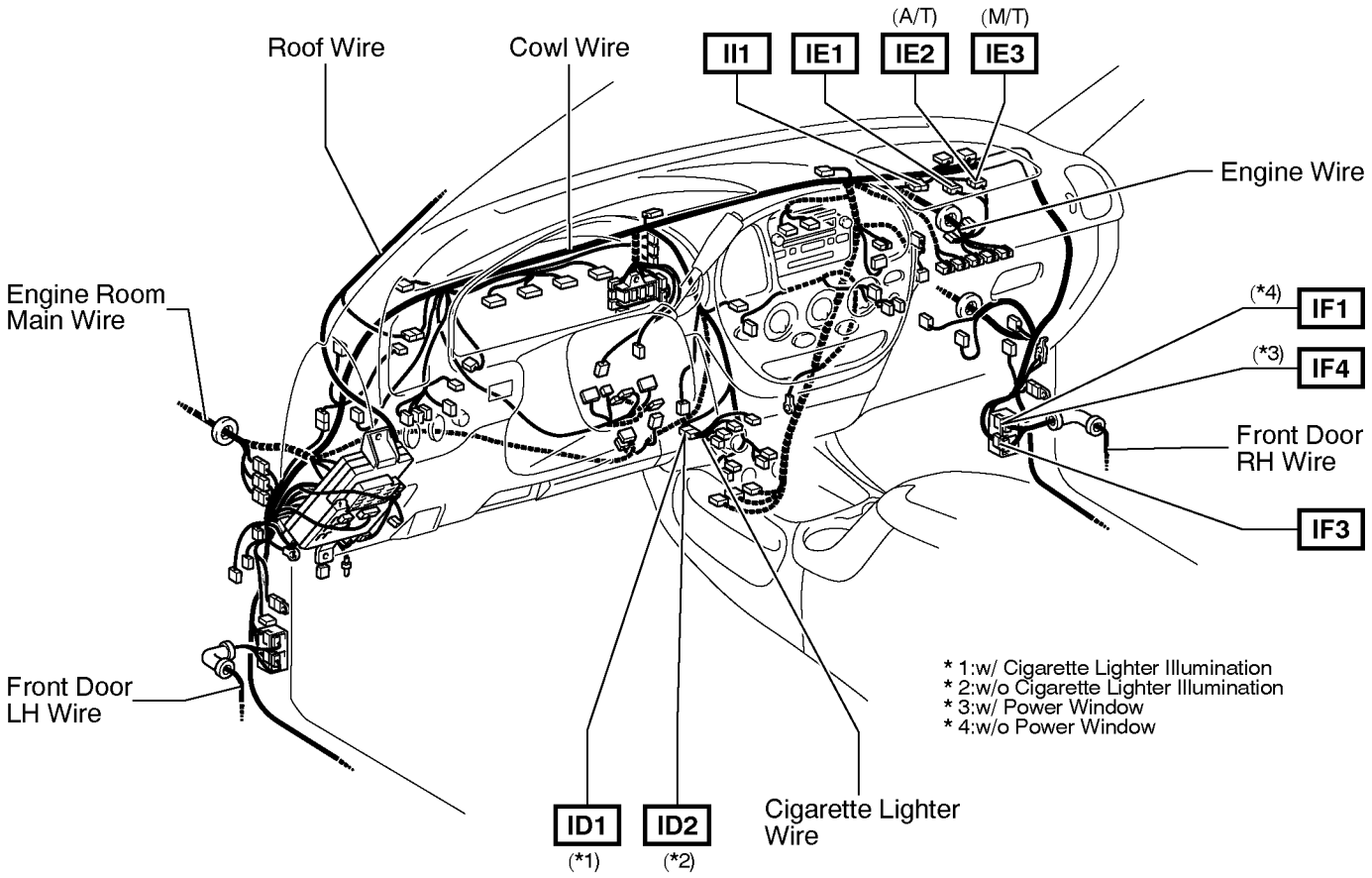

⬡ : Location of Splice Points

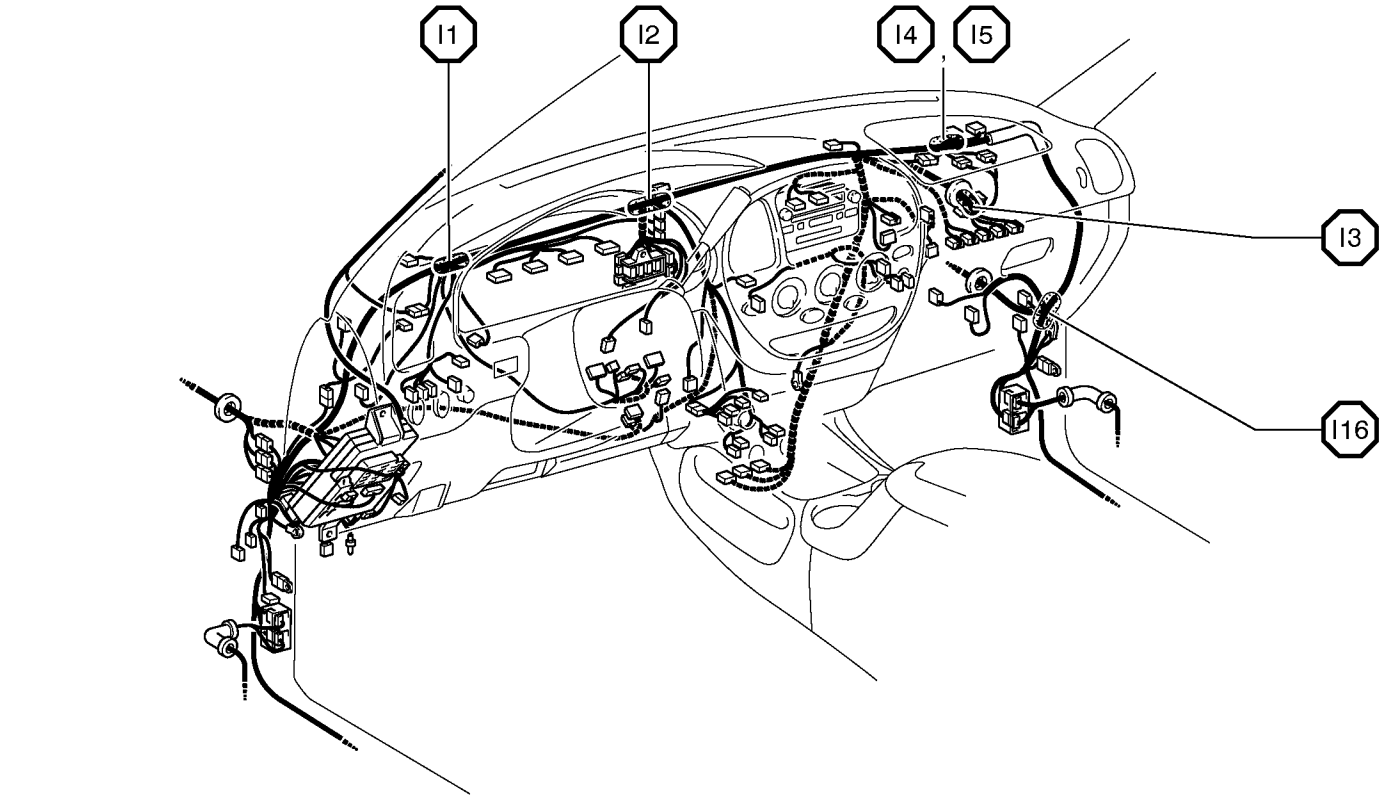

Connector Joining Wire Harness and Wire Harness

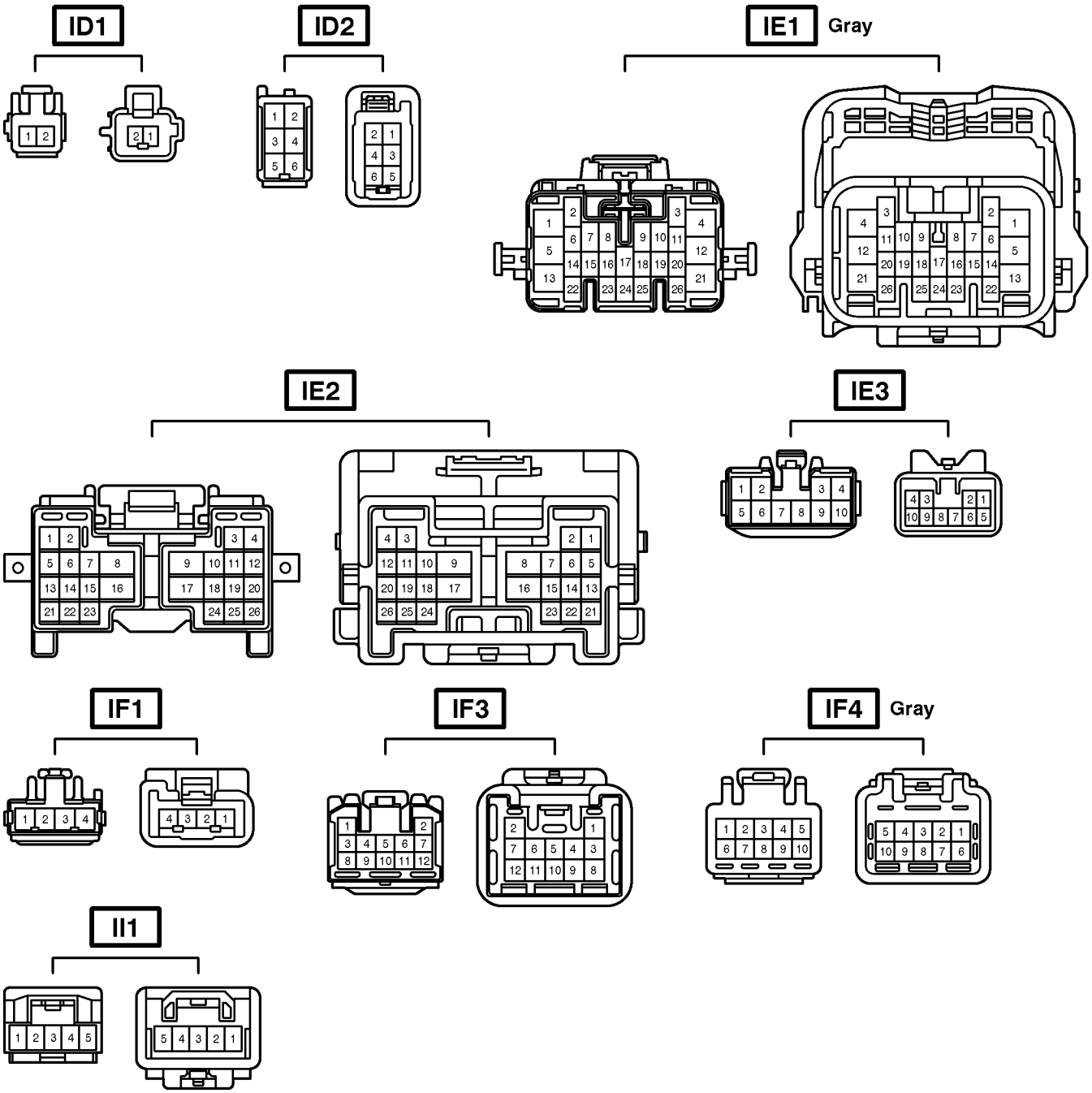

Code	Joining Wire Harness and Wire Harness (Connector Location)
ID1	Cigarette Lighter Wire and Cowl Wire (Instrument Panel Brace LH)
ID2	
IE1	Engine Wire and Cowl Wire (Right Side of Instrument Panel)
IE2	
IE3	
IF1	Front Door RH Wire and Cowl Wire (Right Kick Panel)
IF3	
IF4	
II1	Cowl Wire and Cowl Wire (Instrument Panel Reinforcement RH)

▭ : Location of Connector Joining Wire Harness and Wire Harness

▽ : Location of Ground Points

[Access Cab]

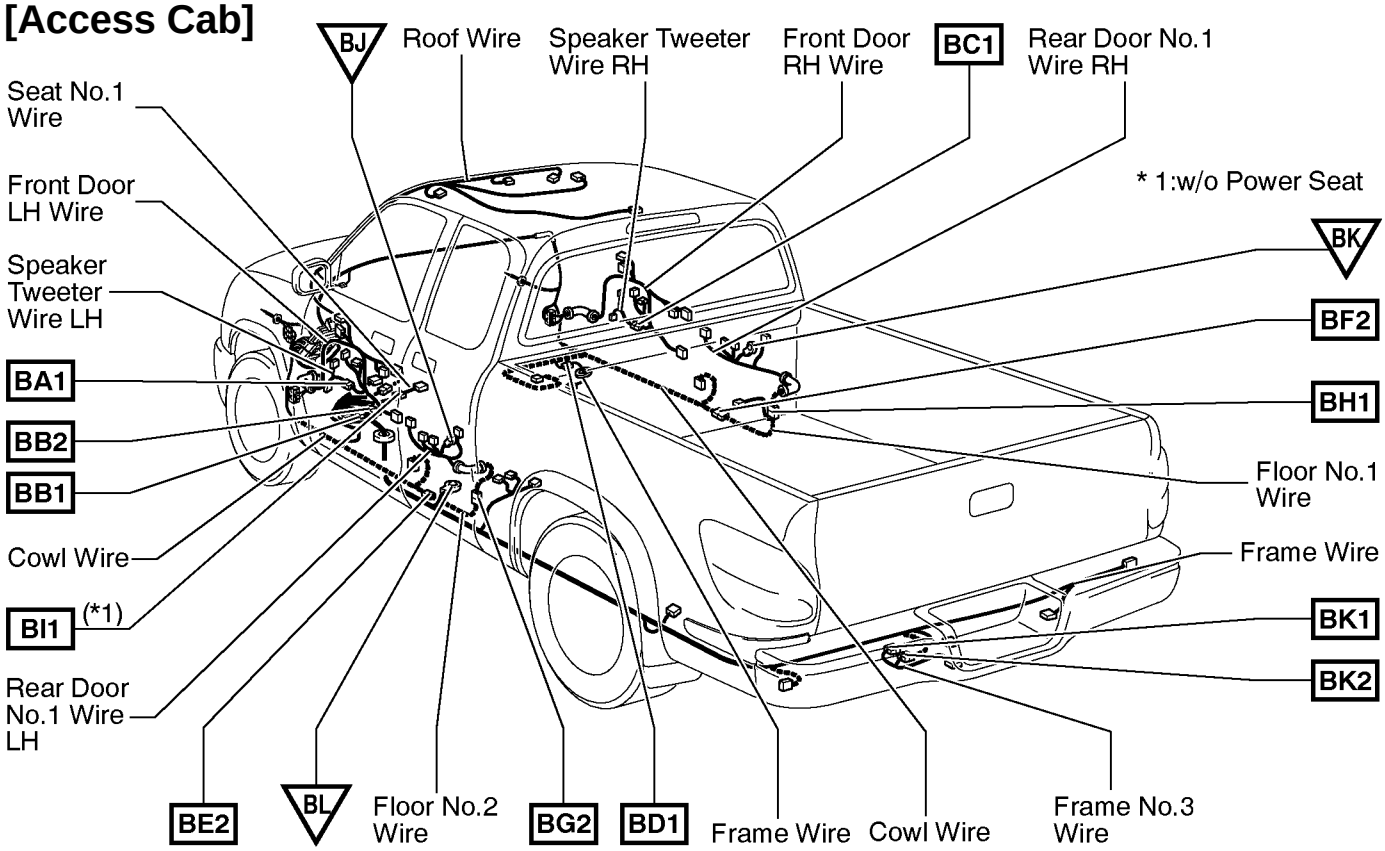

○ : Location of Splice Points

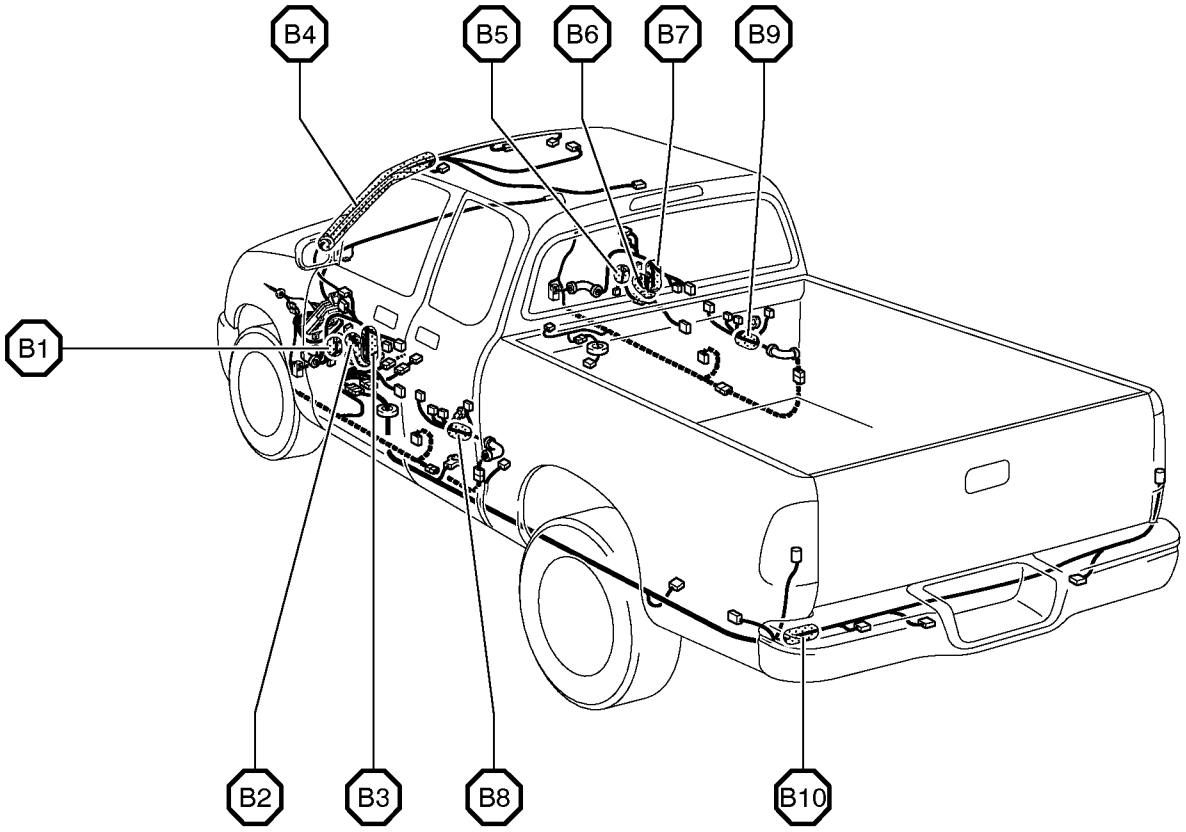

Connector Joining Wire Harness and Wire Harness

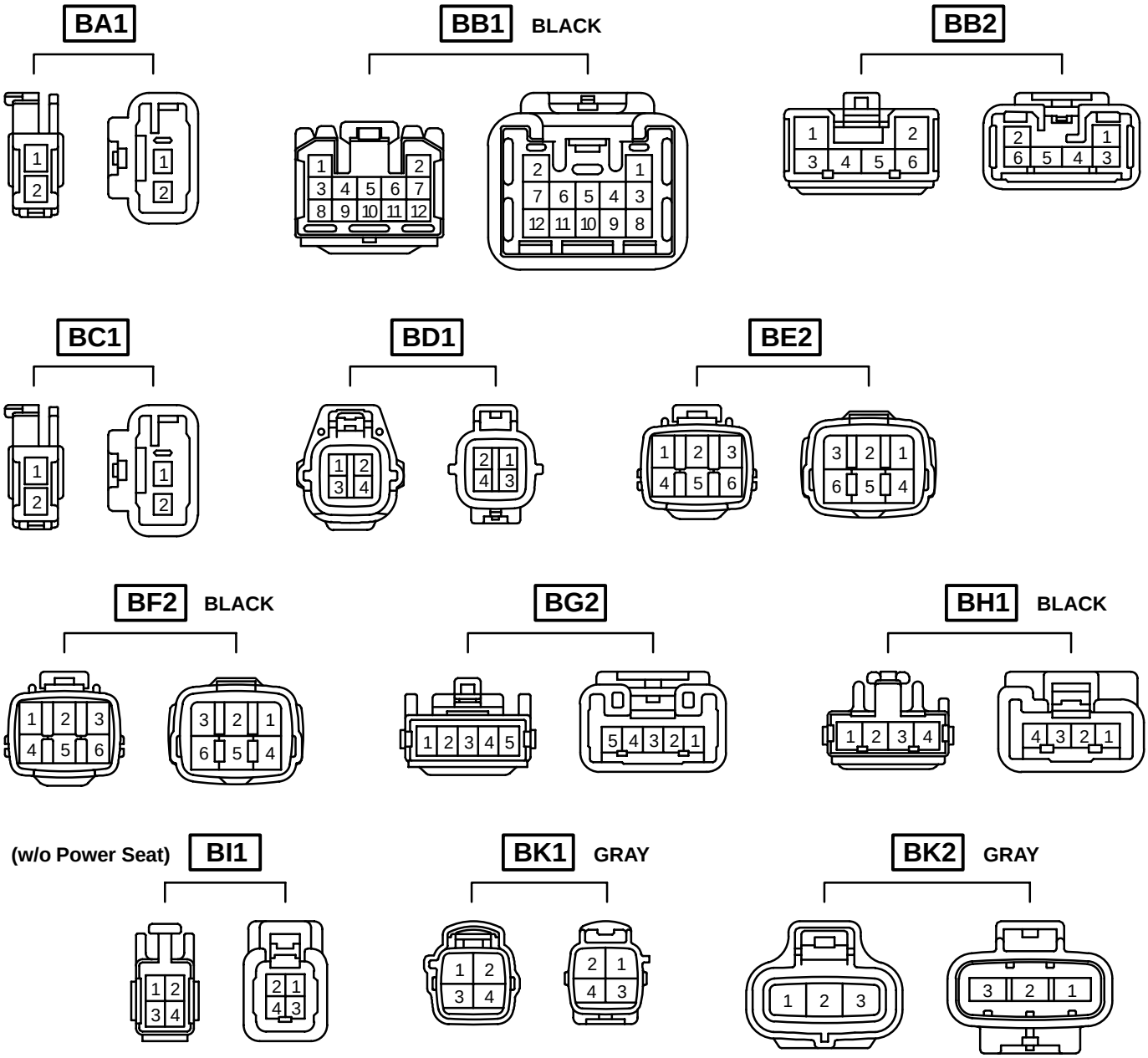

Code	Joining Wire Harness and Wire Harness (Connector Location)
BA1	Front Door LH Wire and Speaker Tweeter Wire LH (Inside of Front Door LH)
BB1	Frame Wire and Cowl Wire (Under the Driver's Seat)
BB2	
BC1	Front Door RH Wire and Speaker Tweeter Wire RH (Inside of Front Door RH)
BD1	Frame Wire and Cowl Wire (Under the Front Passenger's Seat)
BE2	Floor No.2 Wire and Cowl Wire (Center of Left Rocker Panel)
BF2	Floor No.1 Wire and Cowl Wire (Center of Right Rocker Panel)
BG2	Floor No.2 Wire and Rear Door No.1 Wire LH (Under the Left Quarter Panel)
BH1	Floor No.1 Wire and Rear Door No.1 Wire RH (Under the Right Quarter Panel)
BI1	Cowl Wire and Seat No.1 Wire (Under the Driver's Seat)
BK1	Frame Wire and Frame No.3 Wire (Near the License Plate Light)
BK2	

▭ : Location of Connector Joining Wire Harness and Wire Harness

▽ : Location of Ground Points

[Standard Cab]

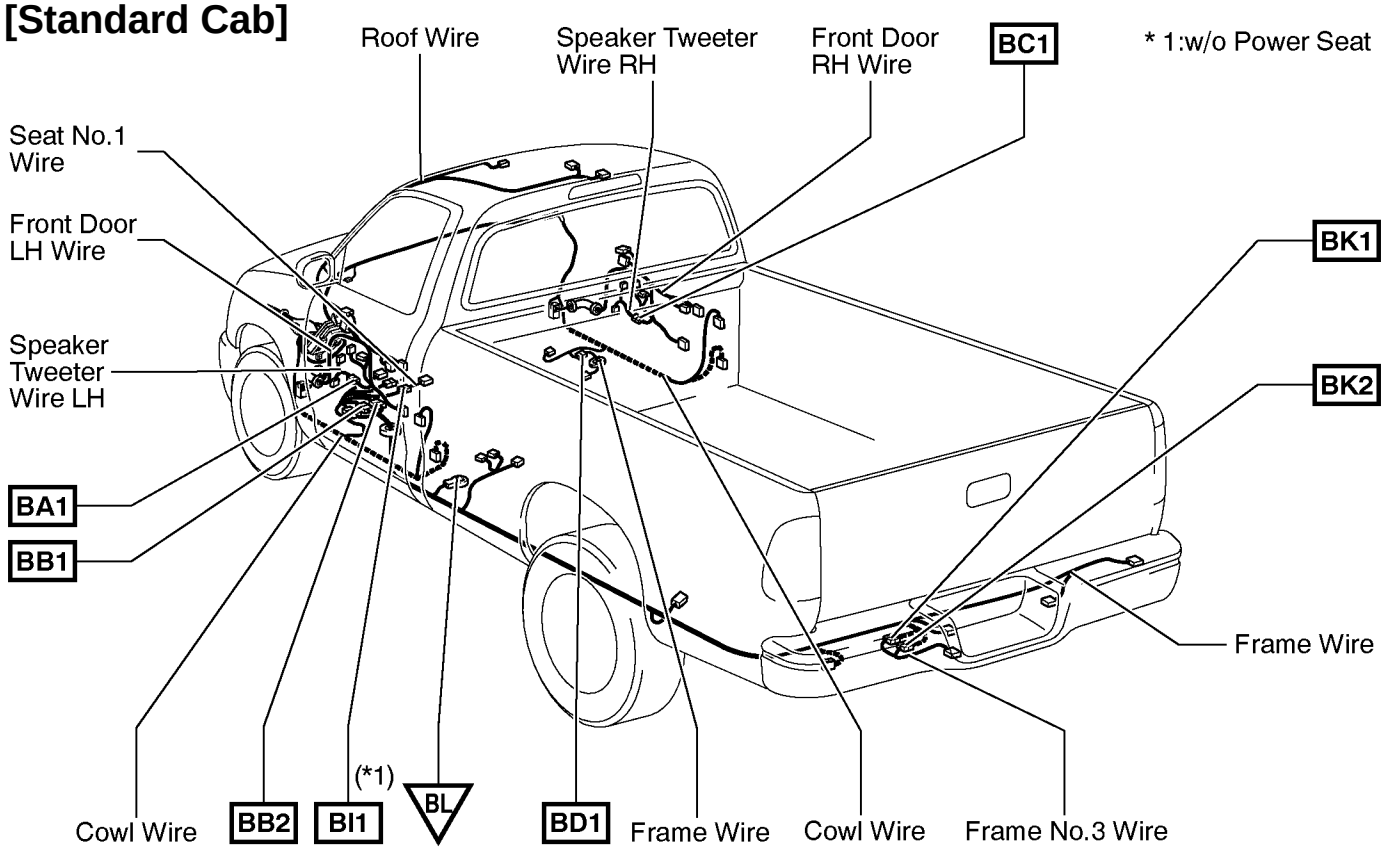

○ : Location of Splice Points

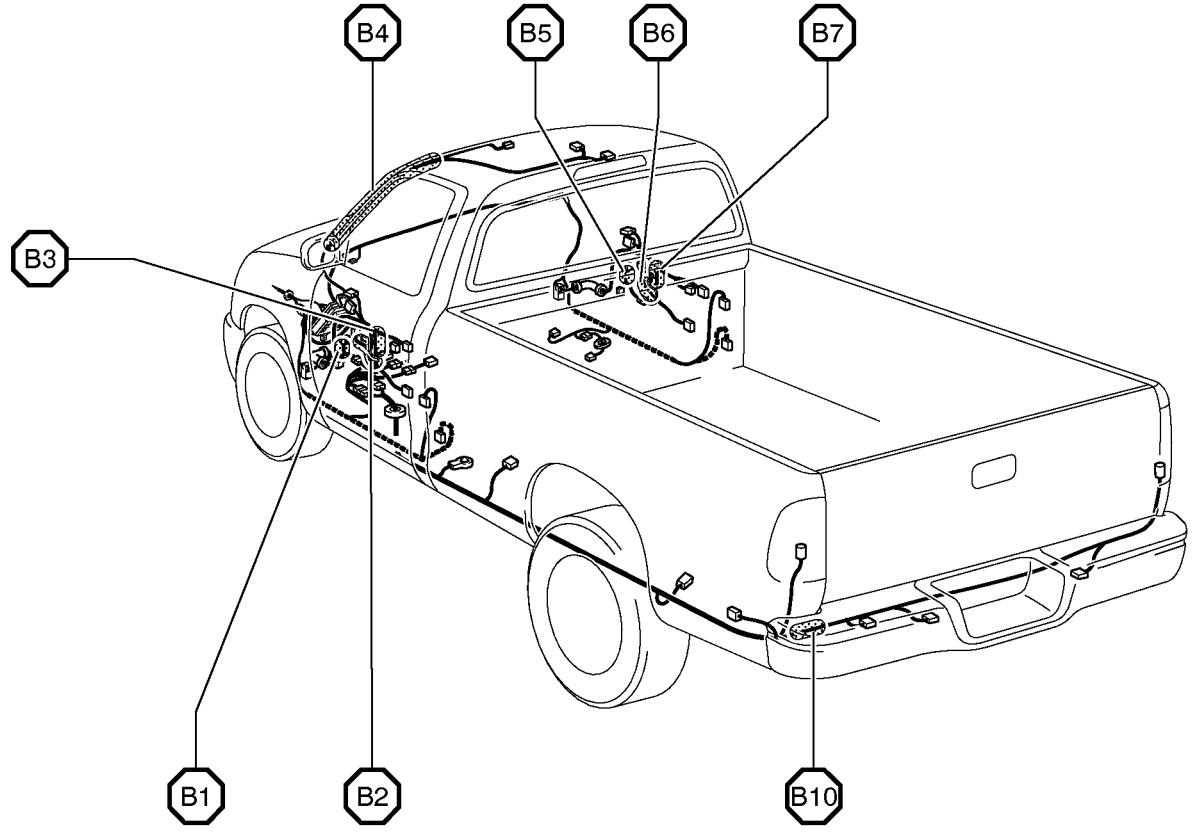

Connector Joining Wire Harness and Wire Harness

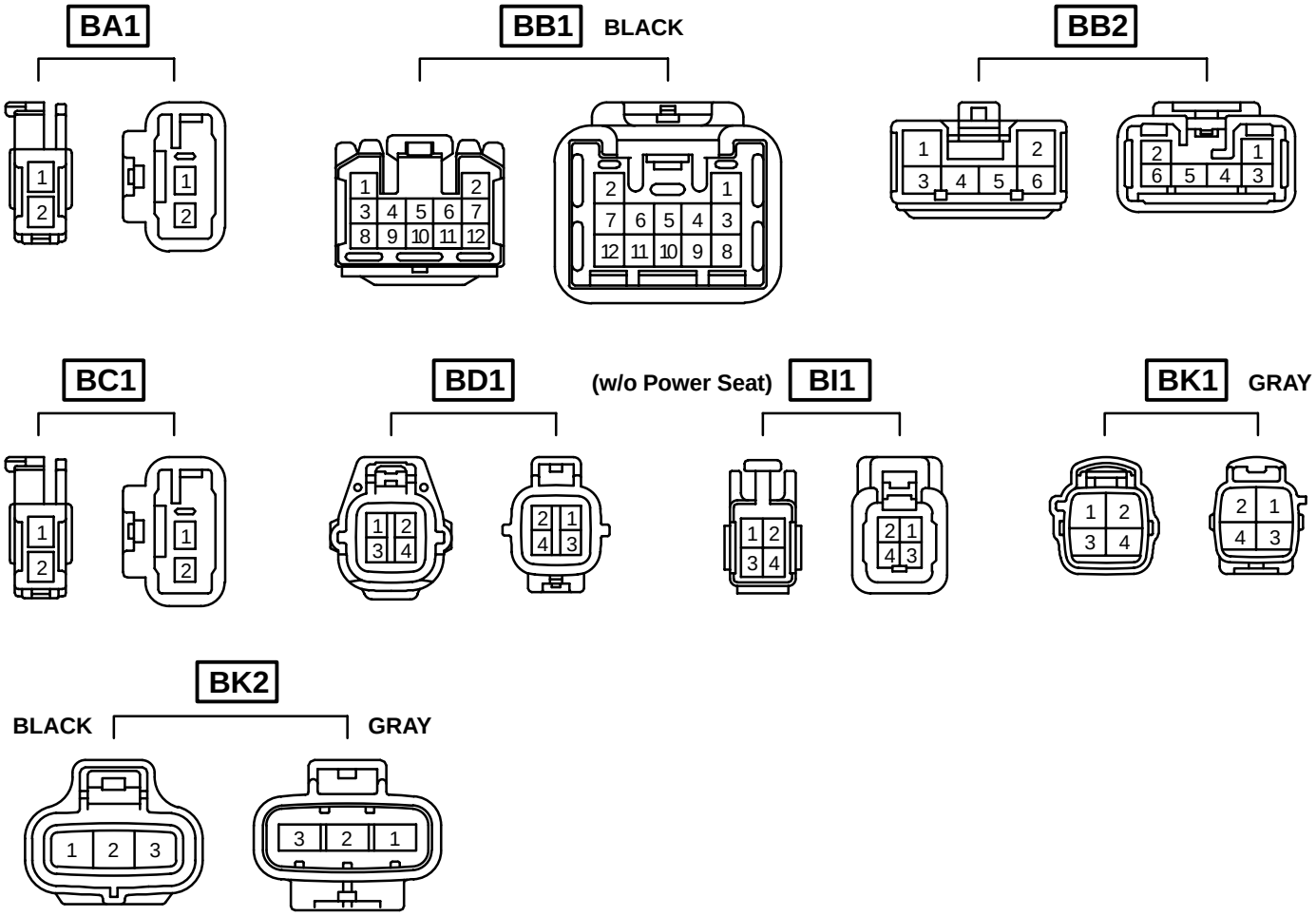

Code	Joining Wire Harness and Wire Harness (Connector Location)
BA1	Front Door LH Wire and Speaker Tweeter Wire LH (Inside of Front Door LH)
BB1	Frame Wire and Cowl Wire (Under the Driver's Seat)
BB2	
BC1	Front Door RH Wire and Speaker Tweeter Wire RH (Inside of Front Door RH)
BD1	Frame Wire and Cowl Wire (Under the Front Passenger's Seat)
BI1	Cowl Wire and Seat No.1 Wire (Under the Driver's Seat)
BK1	Frame Wire and Frame No.3 Wire (Near the License Plate Light)
BK2	

▭ : Location of Connector Joining Wire Harness and Wire Harness

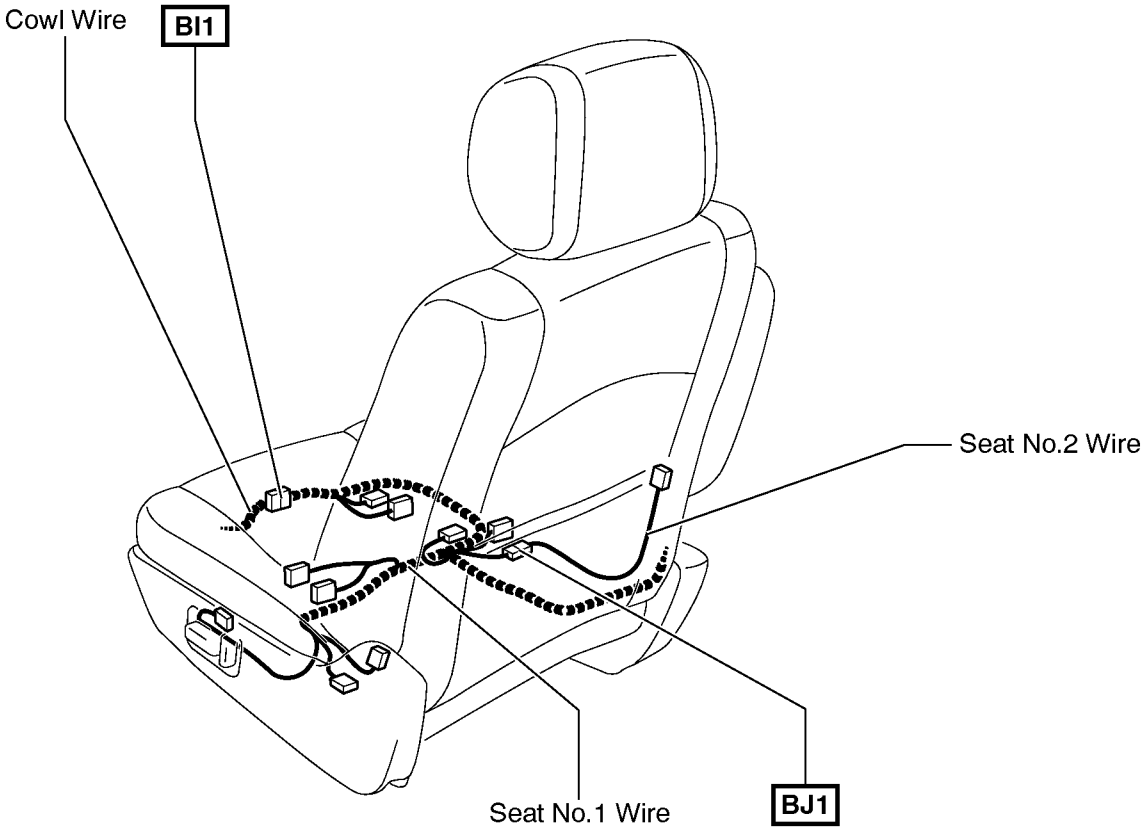

Connector Joining Wire Harness and Wire Harness

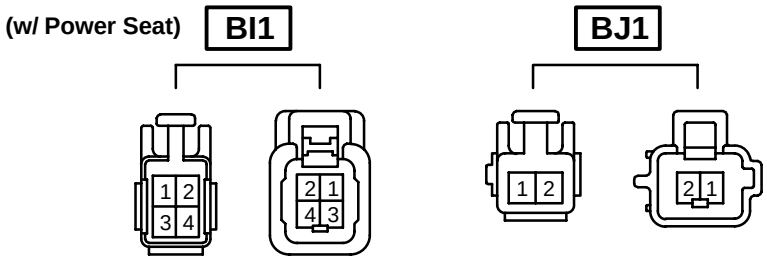

Code	Joining Wire Harness and Wire Harness (Connector Location)
BI1	Cowl Wire and Seat No.1 Wire (Under the Driver's Seat)
BJ1	Seat No.1 Wire and Seat No.2 Wire (Under the Driver's Seat)

MEMO

Position of Parts in Engine Compartment

[2UZ–FE]

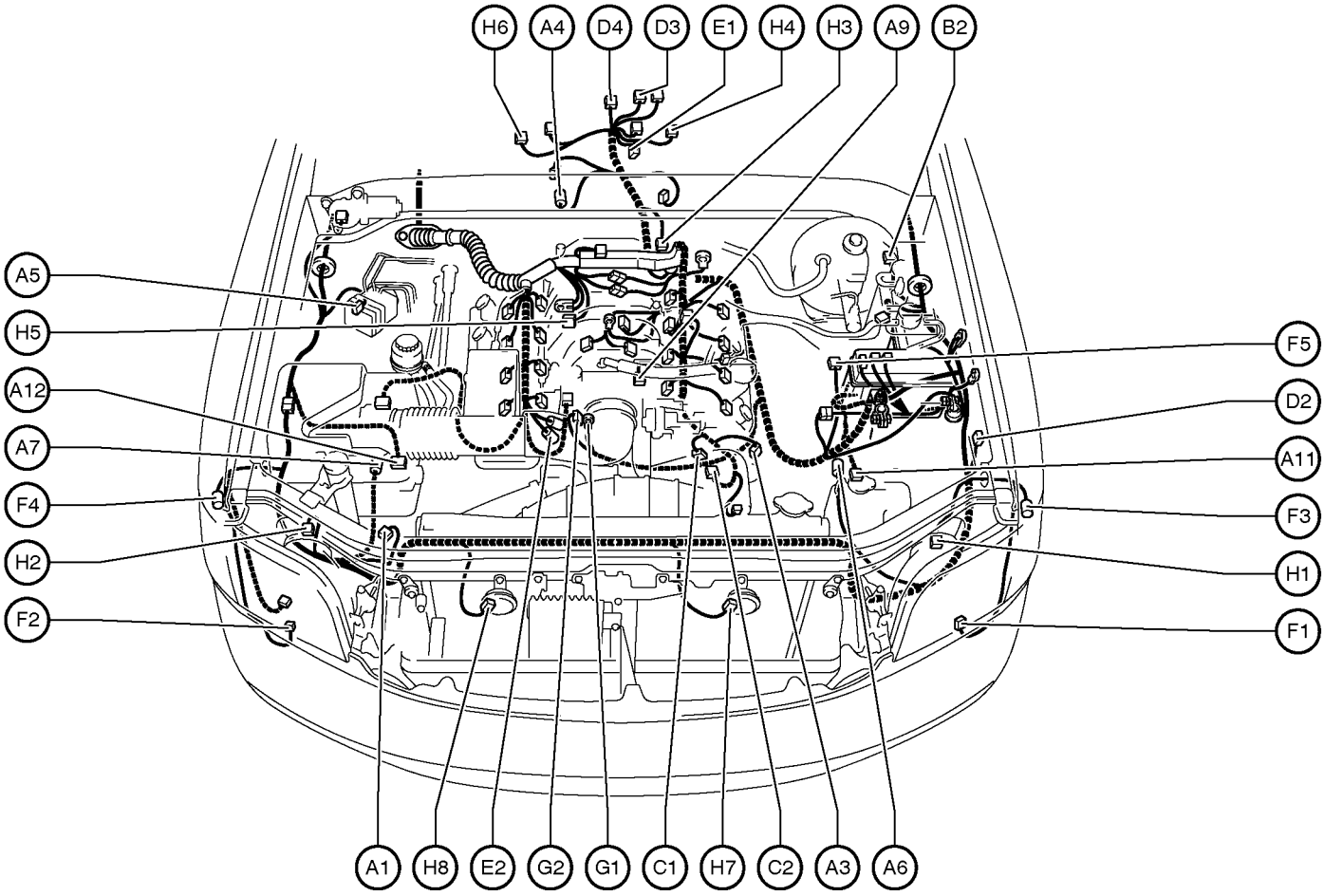

A 1 A/C Dual Pressure SW
A 3 A/C Magnetic Clutch and Lock Sensor
A 4 A/T Oil Temp. Sensor
A 5 ABS Actuator with ECU
A 6 ABS Speed Sensor Front LH
A 7 ABS Speed Sensor Front RH
A 9 ADD Actuator
A 11 Airbag Sensor Front LH
A 12 Airbag Sensor Front RH

B 2 Brake Fluid Level Warning SW

C 1 Camshaft Position Sensor
C 2 Crankshaft Position Sensor

D 2 Daytime Running Light Resistor
D 3 Detection SW (Transfer 4WD Position)
D 4 Detection SW (Transfer L4 Position)

E 1 Electronically Controlled Transmission Solenoid
E 2 Engine Coolant Temp. Sensor

F 1 Front Fog Light LH
F 2 Front Fog Light RH
F 3 Front Turn Signal Light and Parking Light LH
F 4 Front Turn Signal Light and Parking Light RH
F 5 Fuel Pump Resistor

G 1 Generator
G 2 Generator

H 1 Headlight LH
H 2 Headlight RH
H 3 Heated Oxygen Sensor (Bank 1 Sensor 1)
H 4 Heated Oxygen Sensor (Bank 1 Sensor 2)
H 5 Heated Oxygen Sensor (Bank 2 Sensor 1)
H 6 Heated Oxygen Sensor (Bank 2 Sensor 2)
H 7 Horn LH
H 8 Horn RH

Position of Parts in Engine Compartment

[2UZ–FE]

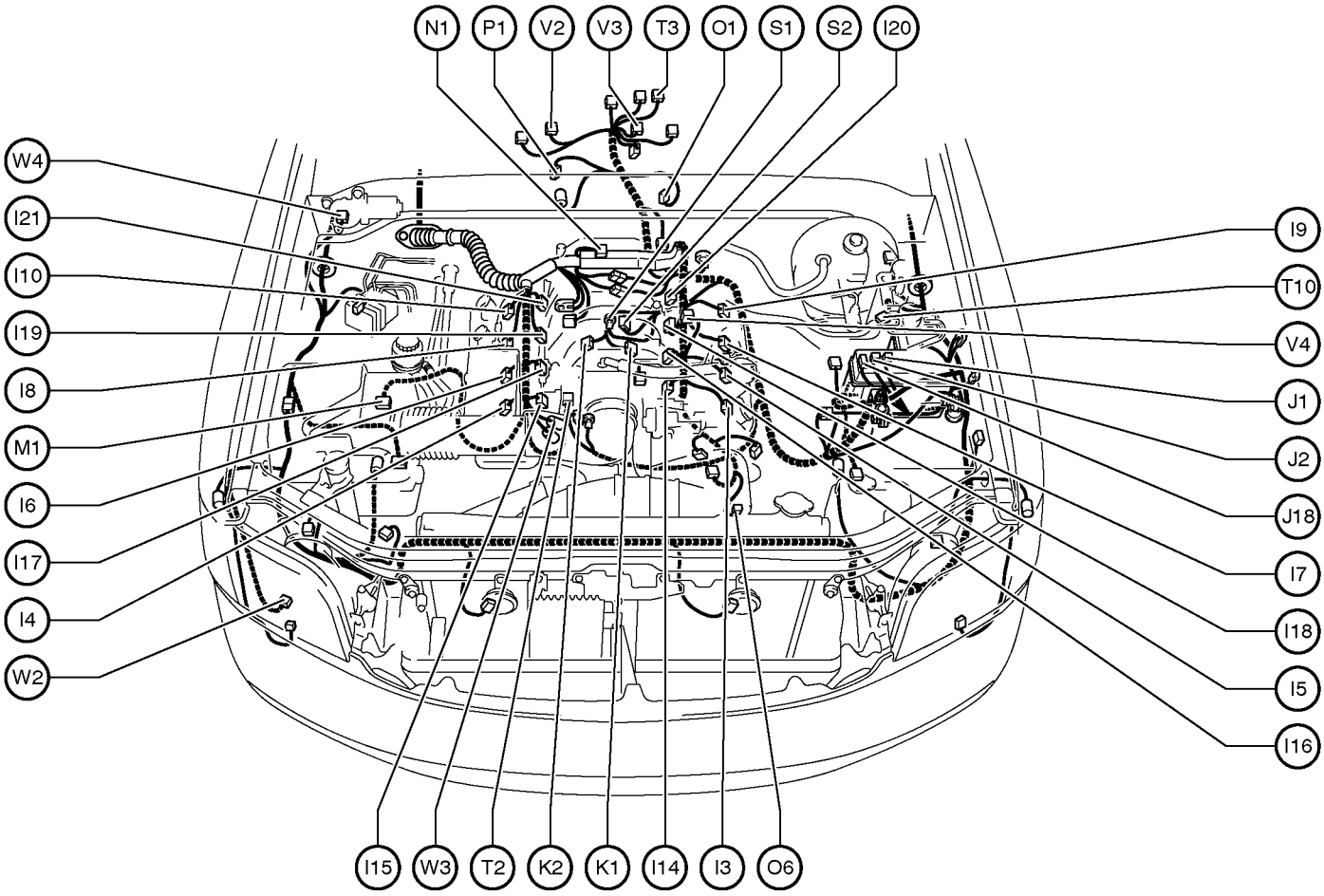

I 3 Igniter and Ignition Coil No.1
I 4 Igniter and Ignition Coil No.2
I 5 Igniter and Ignition Coil No.3
I 6 Igniter and Ignition Coil No.4
I 7 Igniter and Ignition Coil No.5
I 8 Igniter and Ignition Coil No.6
I 9 Igniter and Ignition Coil No.7
I 10 Igniter and Ignition Coil No.8
I 14 Injector No.1
I 15 Injector No.2
I 16 Injector No.3
I 17 Injector No.4
I 18 Injector No.5
I 19 Injector No.6
I 20 Injector No.7
I 21 Injector No.8

J 1 Junction Connector
J 2 Junction Connector
J 18 Junction Connector

K 1 Knock Sensor 1
K 2 Knock Sensor 2

M 1 Mass Air Flow Meter

N 1 Noise Filter

O 1 O/D Direct Clutch Speed Sensor
O 6 Oil Pressure Sender

P 1 Park/Neutral Position SW

S 1 Starter
S 2 Starter

T 2 Throttle Position Sensor
T 3 Transfer Shift Actuator
T 10 TVIP Buzzer

V 2 Vehicle Speed Sensor (Combination Meter)
V 3 Vehicle Speed Sensor
(Electronically Controlled Transmission)
V 4 VSV (EVAP)

W 2 Washer Motor and Washer Level Sensor
W 3 Water Temp. Sender
W 4 Wiper Motor

Position of Parts in Engine Compartment

[5VZ–FE]

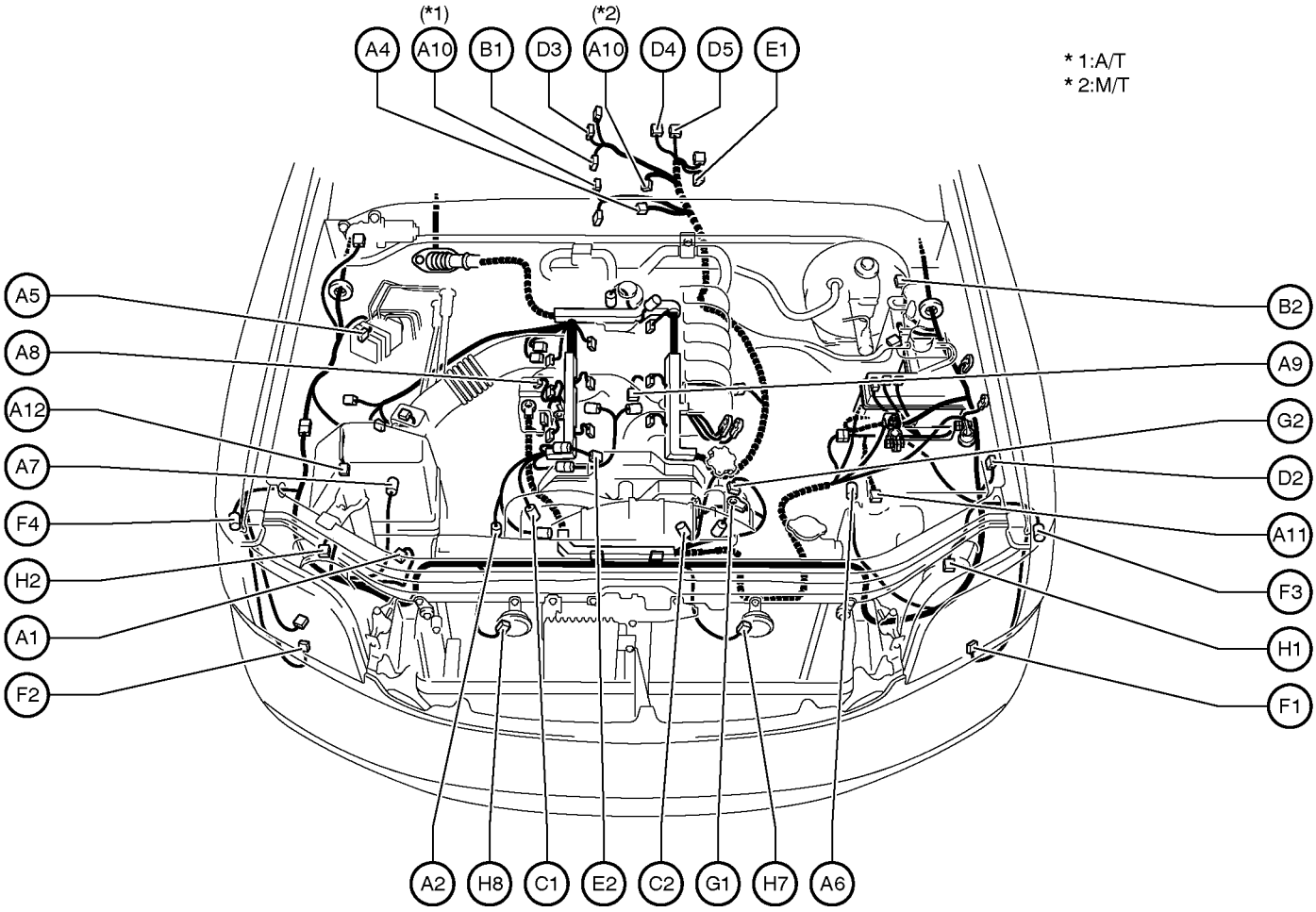

A 1 A/C Dual Pressure SW
A 2 A/C Magnetic Clutch
A 4 A/T Oil Temp. Sensor
A 5 ABS Actuator with ECU
A 6 ABS Speed Sensor Front LH
A 7 ABS Speed Sensor Front RH
A 8 Accel Position Sensor
A 9 ADD Actuator
A10 Air Fuel Ratio Sensor (Bank 1 Sensor 1)
A11 Airbag Sensor Front LH
A12 Airbag Sensor Front RH

B 1 Back–Up Light SW
B 2 Brake Fluid Level Warning SW

C 1 Camshaft Position Sensor
C 2 Crankshaft Position Sensor

D 2 Daytime Running Light Resistor
D 3 Detection SW (Transfer 4WD Position)
D 4 Detection SW (Transfer L4 Position)
D 5 Detection SW (Transfer Neutral Position)

E 1 Electronically Controlled Transmission Solenoid
E 2 Engine Coolant Temp. Sensor

F 1 Front Fog Light LH
F 2 Front Fog Light RH
F 3 Front Turn Signal Light and Parking Light LH
F 4 Front Turn Signal Light and Parking Light RH

G 1 Generator
G 2 Generator

H 1 Headlight LH
H 2 Headlight RH
H 7 Horn LH
H 8 Horn RH

Position of Parts in Engine Compartment

[5VZ–FE]

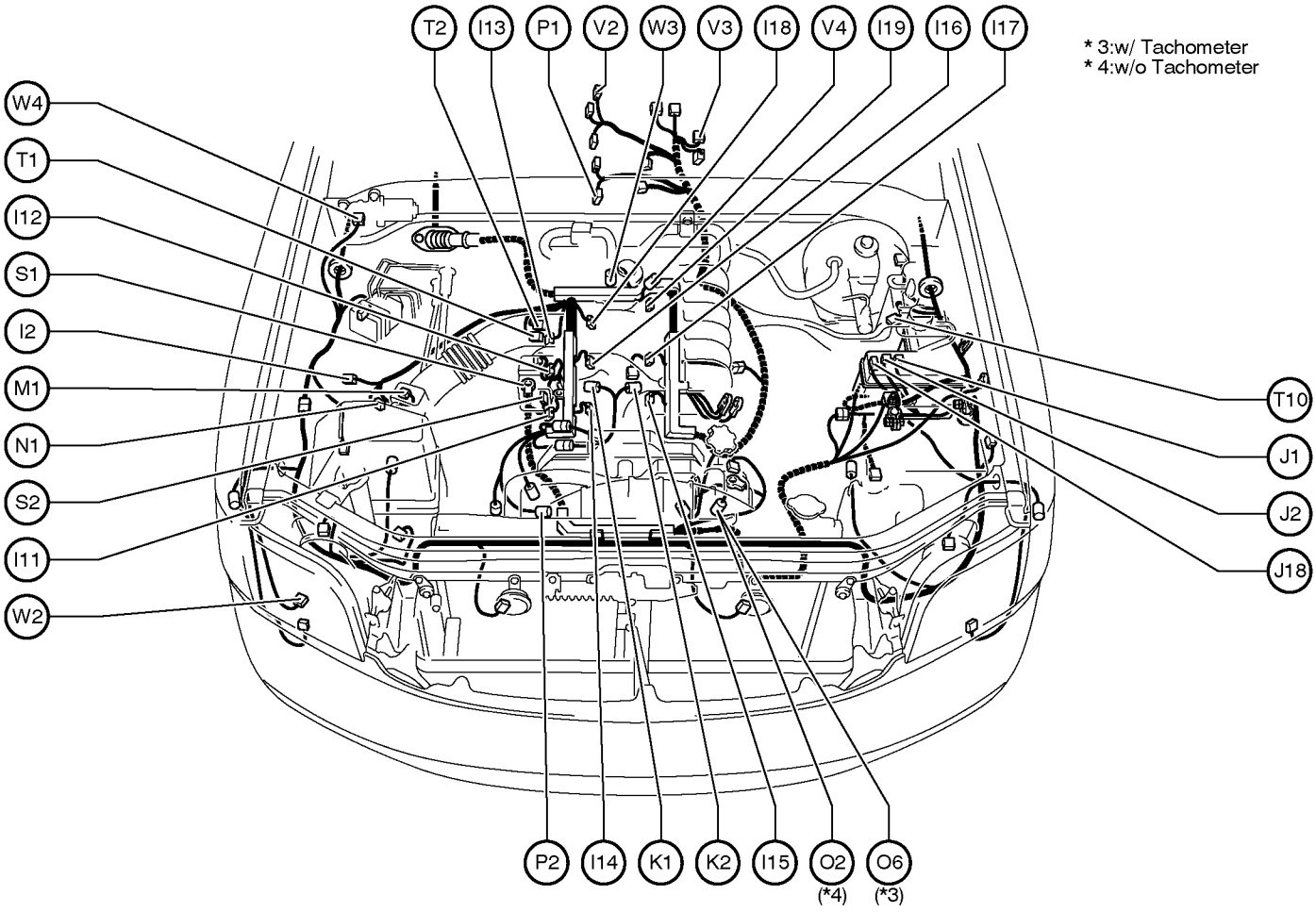

I 2 Igniter
I 11 Ignition Coil No.1
I 12 Ignition Coil No.2
I 13 Ignition Coil No.3
I 14 Injector No.1
I 15 Injector No.2
I 16 Injector No.3
I 17 Injector No.4
I 18 Injector No.5
I 19 Injector No.6

J 1 Junction Connector
J 2 Junction Connector
J 18 Junction Connector

K 1 Knock Sensor 1
K 2 Knock Sensor 2

M 1 Mass Air Flow Meter

N 1 Noise Filter

O 2 Oil Pressure SW
O 6 Oil Pressure Sender

P 1 Park/Neutral Position SW
P 2 Power Steering Oil Pressure SW

S 1 Starter
S 2 Starter

T 1 Throttle Control Motor
T 2 Throttle Position Sensor
T 10 TVIP Buzzer

V 2 Vehicle Speed Sensor (Combination Meter)
V 3 Vehicle Speed Sensor
(Electronically Controlled Transmission)
V 4 VSV (EVAP)

W 2 Washer Motor and Washer Level Sensor
W 3 Water Temp. Sender
W 4 Wiper Motor

Position of Parts in Instrument Panel

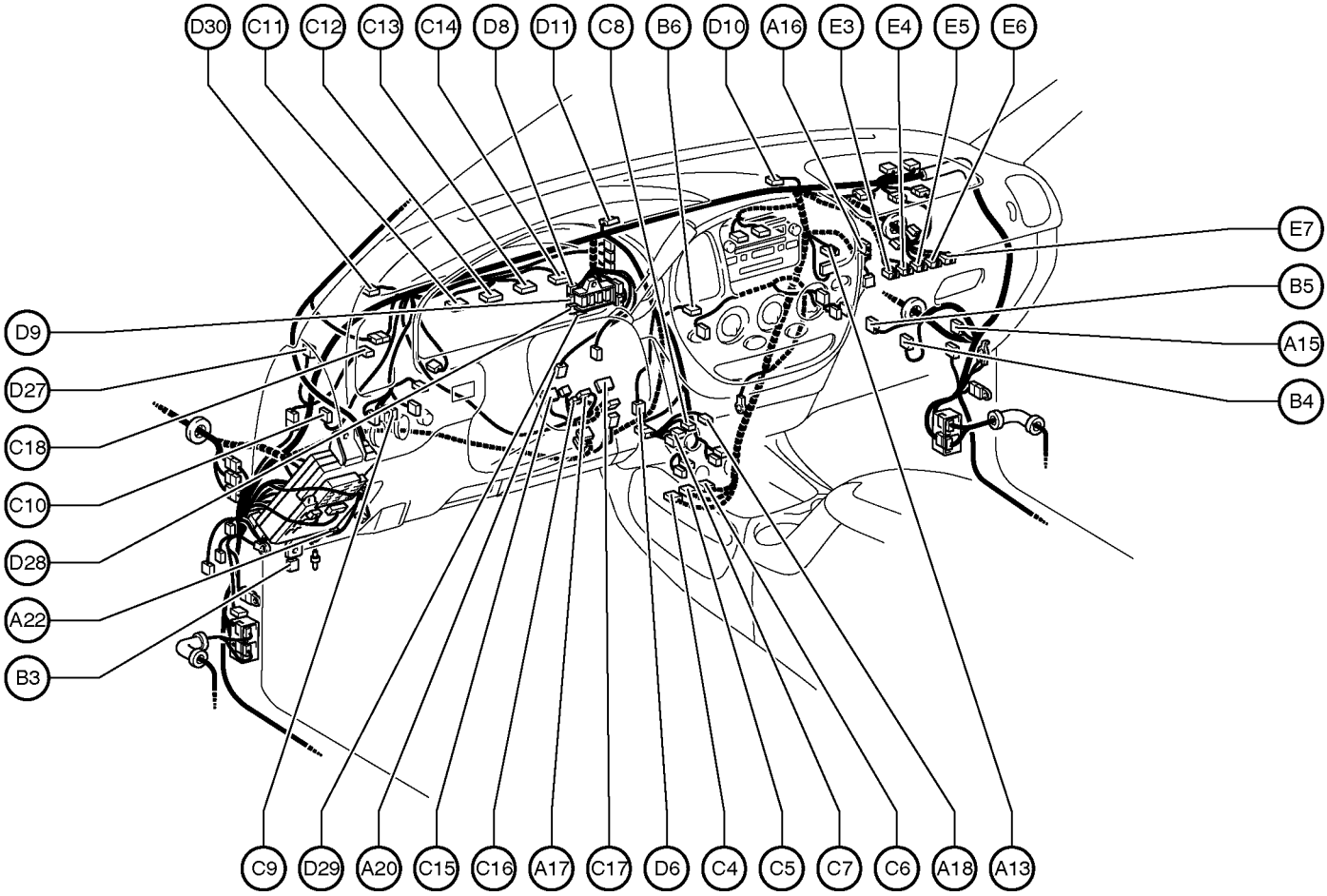

A13 A/C Thermistor
A15 Air Inlet Control Servo Motor
A16 Airbag Squib (Front Passenger Airbag Assembly)
A17 Airbag Squib (Steering Wheel Pad)
A18 Ashtray Illumination
A20 Accelerator Pedal Position Sensor
A22 ACC Cut Relay

B 3 Back–UP Light Relay
B 4 Blower Motor
B 5 Blower Resistor
B 6 Blower SW and Defroster Mode SW

C 4 Center Airbag Sensor Assembly
C 5 Center Airbag Sensor Assembly
C 6 Center Airbag Sensor Assembly
C 7 Cigarette Lighter
C 8 Cigarette Lighter Illumination
C 9 Clutch Start Cancel SW
C10 Clutch Start SW
C11 Combination Meter
C12 Combination Meter
C13 Combination Meter
C14 Combination Meter
C15 Combination SW
C16 Combination SW
C17 Combination SW
C18 Cruise Control Clutch SW

D 6 Data Link Connector 3
D 8 Diode (A/T)
D 9 Diode (Door Courtesy)
D10 Diode (Idle–Up)
D11 Diode (Power Window System)
D27 Diode (Step Light)
D28 Diode (Door Lock)
D29 Diode (TVIP)
D30 Diode (Unlock Warning)

E 3 Engine Control Module
E 4 Engine Control Module
E 5 Engine Control Module
E 6 Engine Control Module
E 7 Engine Control Module

Position of Parts in Instrument Panel

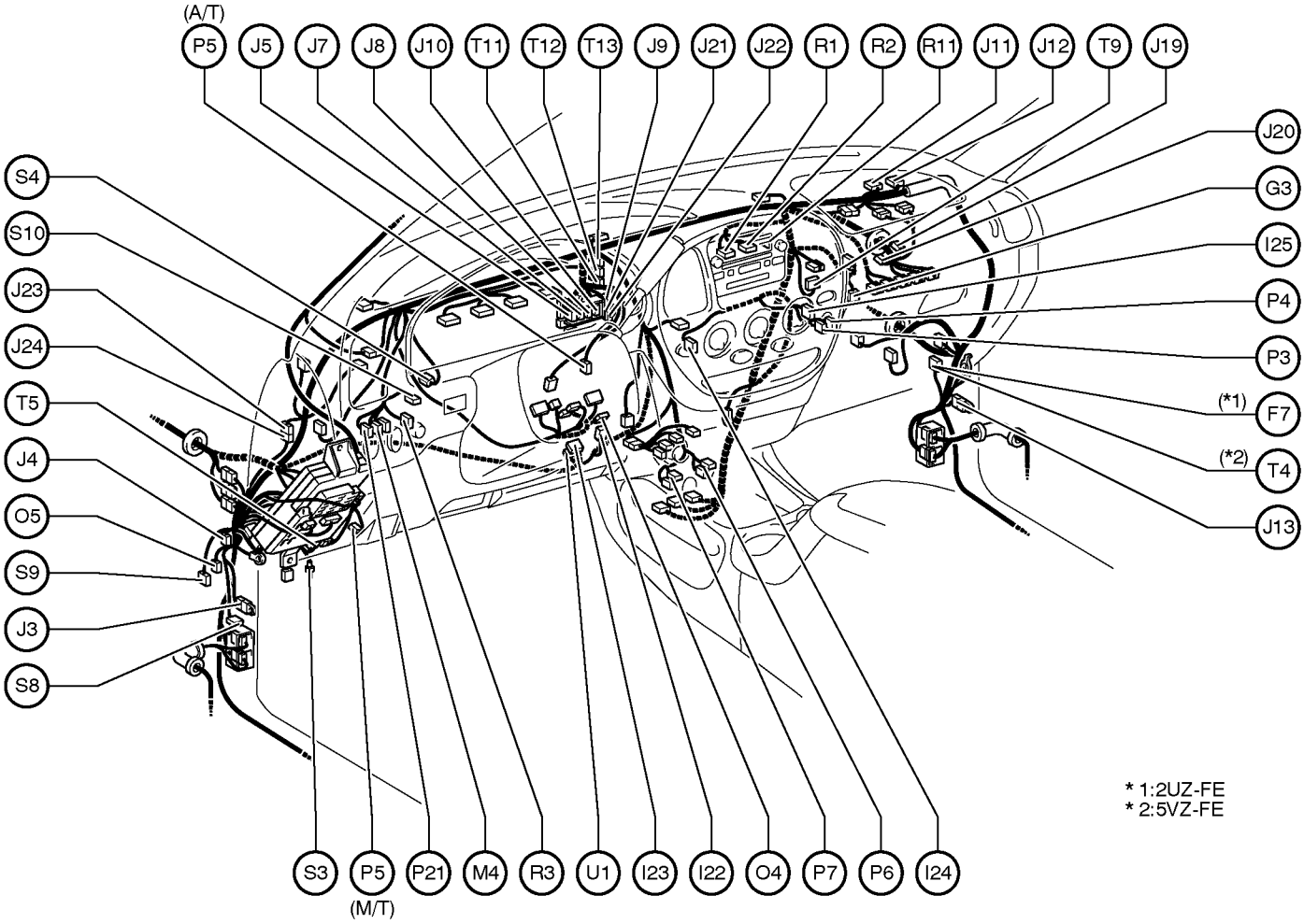

F 7 4WD Control ECU

G 3 Glove Box Light

I 22 Ignition Key Cylinder Light
I 23 Ignition SW
I 24 Integration Control and Panel
I 25 Integration Control and Panel

J 3 Junction Connector
J 4 Junction Connector
J 5 Junction Connector
J 7 Junction Connector
J 8 Junction Connector
J 9 Junction Connector
J 10 Junction Connector
J 11 Junction Connector
J 12 Junction Connector
J 13 Junction Connector
J 19 Junction Connector
J 20 Junction Connector
J 21 Junction Connector
J 22 Junction Connector
J 23 Junction Connector
J 24 Junction Connector

M 4 Mirror Heater SW

O 4 O/D Main SW
O 5 Option Connector

P 3 Passenger Airbag Manual On–Off SW
P 4 Passenger Airbag Manual On–Off SW
P 5 Parking Brake SW
P 6 Power Outlet
P 7 Power Outlet
P 21 Power Window Control SW (Back Window)

R 1 Radio and Player
R 2 Radio and Player
R 3 Rheostat
R 11 Radio and Player
S 3 Step Light
S 4 Stop Light SW
S 8 Short Pin
S 9 Short Connector (TVIP)
S 10 Security Indicator and Grass Brakeage Sensor Microphone

T 4 Transmission Control Relay
T 5 Turn Signal Flasher
T 9 Trailer Converter
T 11 TVIP ECU
T 12 TVIP ECU
T 13 TVIP ECU

U 1 Unlock Warning SW

Position of Parts in Body

[Access Cab]

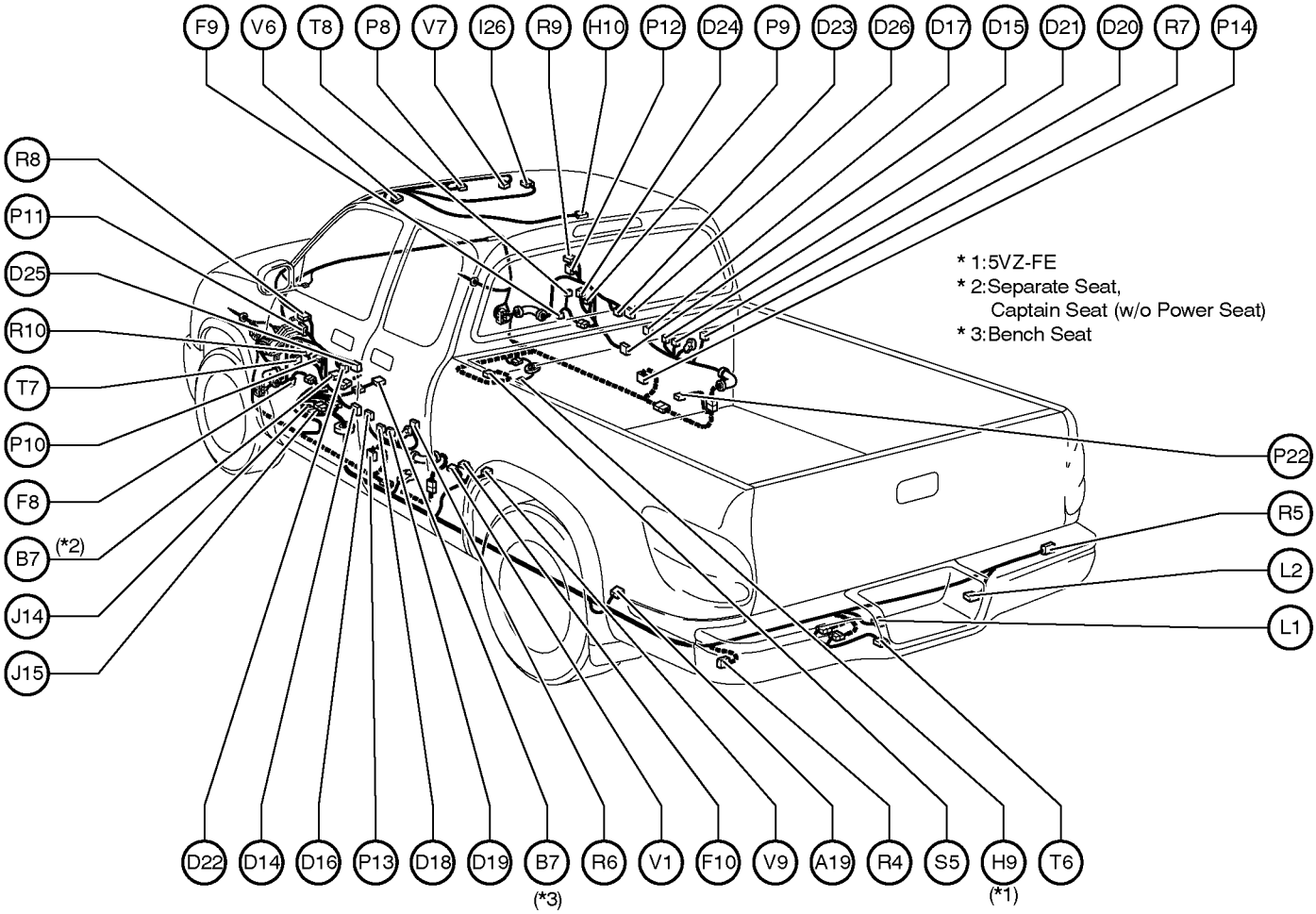

A19 ABS Speed Sensor Rear

B 7 Buckle SW LH

D14 Door Courtesy Light LH
D15 Door Courtesy Light RH
D16 Door Courtesy SW Front LH
D17 Door Courtesy SW Front RH
D18 Door Courtesy SW Rear LH Lower
D19 Door Courtesy SW Rear LH Upper
D20 Door Courtesy SW Rear RH Lower
D21 Door Courtesy SW Rear RH Upper
D22 Door Key Lock and Unlock SW LH
D23 Door Key Lock and Unlock SW RH
D24 Door Lock Control SW RH
D25 Door Lock Motor and Door Unlock Detection SW LH
D26 Door Lock Motor and Door Unlock Detection SW RH

F 8 Front Door Speaker LH
F 9 Front Door Speaker RH
F10 Fuel Pump and Sender

H 9 Heated Oxygen Sensor (Bank 1 Sensor 2)
H10 High Mounted Stop Light and Cargo Light

I 26 Interior Light

J 14 Junction Connector
J 15 Junction Connector

L 1 License Plate Light LH
L 2 License Plate Light RH

P 8 Personal Light
P 9 Power Window Control SW RH
P10 Power Window Master SW
P11 Power Window Motor Front LH
P12 Power Window Motor Front RH
P13 Pretensioner LH
P14 Pretensioner RH
P22 Power Window Motor (Back Window)

R 4 Rear Combination Light LH
R 5 Rear Combination Light RH
R 6 Rear Door Speaker LH
R 7 Rear Door Speaker RH
R 8 Remote Control Mirror LH
R 9 Remote Control Mirror RH
R10 Remote Control Mirror SW

S 5 Seat Belt Warning Occupant Detection Sensor

T 6 Trailer Socket
T 7 Tweeter LH
T 8 Tweeter RH

V 1 Vapor Pressure Sensor
V 6 Vanity Light LH
V 7 Vanity Light RH
V 9 VSV (Canister Closed Valve)

Position of Parts in Body

[Standard Cab]

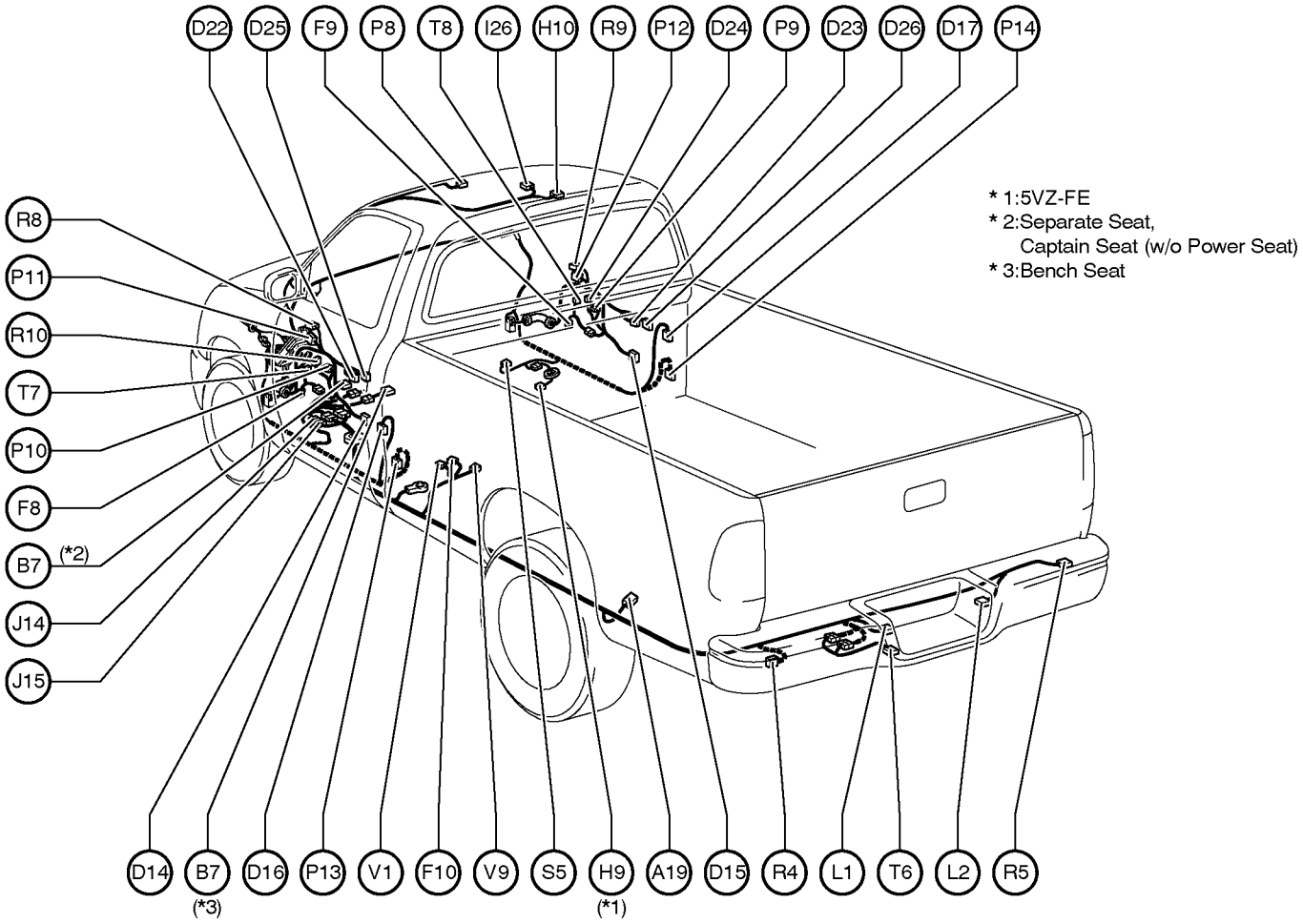

A19 ABS Speed Sensor Rear

B 7 Buckle SW LH

D14 Door Courtesy Light LH
D15 Door Courtesy Light RH
D16 Door Courtesy SW Front LH
D17 Door Courtesy SW Front RH
D22 Door Key Lock and Unlock SW LH
D23 Door Key Lock and Unlock SW RH
D24 Door Lock Control SW RH
D25 Door Lock Motor and Door Unlock Detection SW LH
D26 Door Lock Motor and Door Unlock Detection SW RH

F 8 Front Door Speaker LH
F 9 Front Door Speaker RH
F10 Fuel Pump and Sender

H 9 Heated Oxygen Sensor (Bank 1 Sensor 2)
H10 High Mounted Stop Light and Cargo Light

I 26 Interior Light

J 14 Junction Connector
J 15 Junction Connector

L 1 License Plate Light LH
L 2 License Plate Light RH

P 8 Personal Light
P 9 Power Window Control SW RH
P10 Power Window Master SW
P11 Power Window Motor Front LH
P12 Power Window Motor Front RH
P13 Pretensioner LH
P14 Pretensioner RH

R 4 Rear Combination Light LH
R 5 Rear Combination Light RH
R 8 Remote Control Mirror LH
R 9 Remote Control Mirror RH
R10 Remote Control Mirror SW

S 5 Seat Belt Warning Occupant Detection Sensor

T 6 Trailer Socket
T 7 Tweeter LH
T 8 Tweeter RH

V 1 Vapor Pressure Sensor
V 9 VSV (Canister Closed Valve)

Position of Parts in Seat

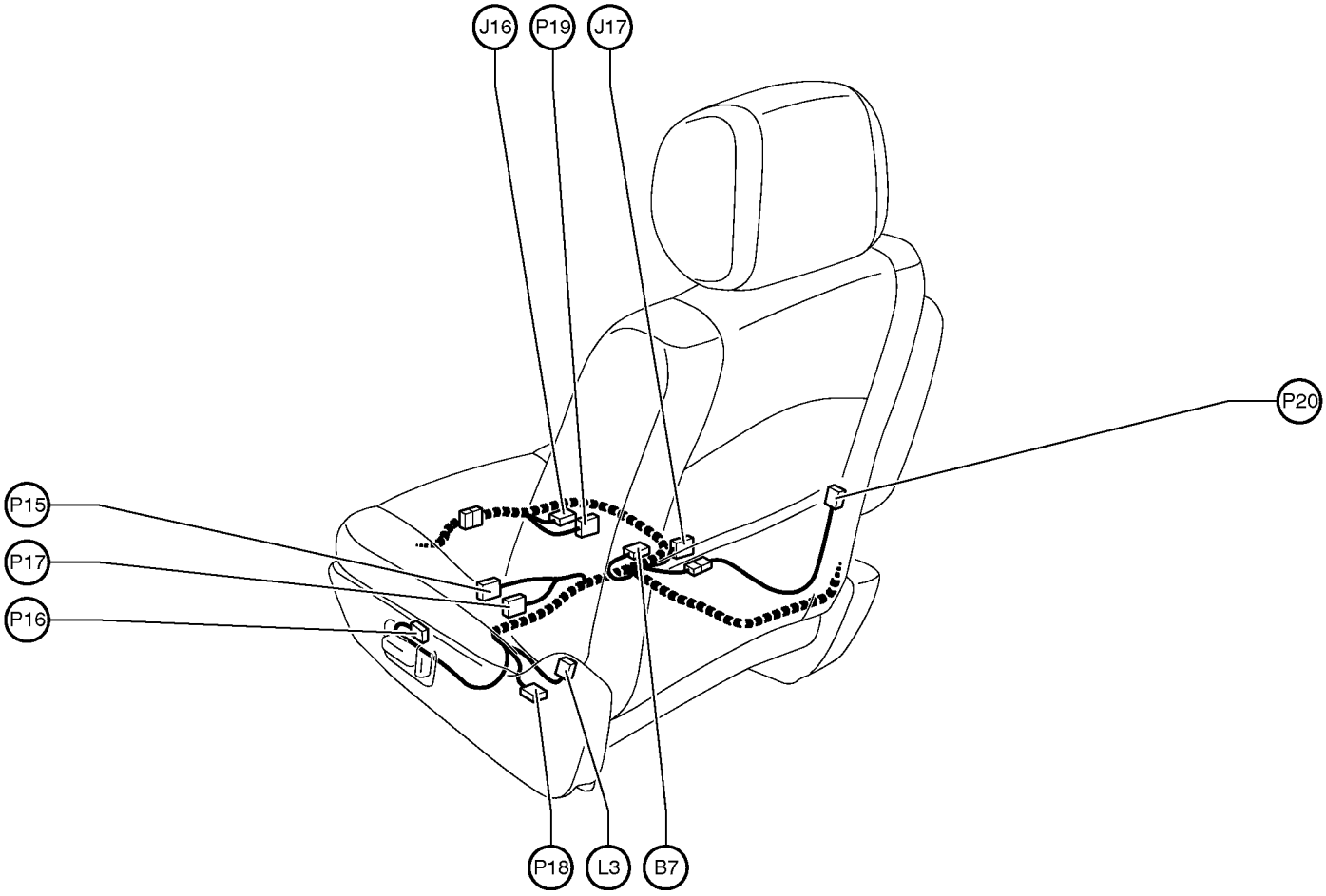

B 7 Buckle SW LH

J 16 Junction Connector
J 17 Junction Connector

L 3 Lumber Support Control SW (Driver's Seat)

P 15 Power Seat Motor (Driver's Seat Front Vertical Control)
P 16 Power Seat Control SW (Driver's Seat)
P 17 Power Seat Motor (Driver's Seat Rear Vertical Control)
P 18 Power Seat Motor (Driver's Seat Reclining Control)
P 19 Power Seat Motor (Driver's Seat Slide Control)
P 20 Power Seat Motor
(Driver's Seat Lumber Support Control)

2003 TOYOTA TUNDRA ELECTRICAL WIRING DIAGRAM SYSTEM CIRCUITS

	Page
ABS	156
AIR CONDITIONING	240
BACK–UP LIGHT	108
CARGO LIGHT	136
CHARGING	74
CIGARETTE LIGHTER	214
CLOCK	216
COMBINATION METER	234
CRUISE CONTROL (2UZ–FE)	160
CRUISE CONTROL (5VZ–FE)	164
DOOR LOCK CONTROL (w/ DAYTIME RUNNING LIGHT)	184
DOOR LOCK CONTROL (w/o DAYTIME RUNNING LIGHT)	190
ELECTRONICALLY CONTROLLED TRANSMISSION AND A/T INDICATOR (2UZ–FE)	144
ELECTRONICALLY CONTROLLED TRANSMISSION AND A/T INDICATOR (5VZ–FE)	150
ENGINE CONTROL (2UZ–FE)	76
ENGINE CONTROL (5VZ–FE)	88
FOG LIGHT (w/ DAYTIME RUNNING LIGHT)	104
FOG LIGHT (w/o DAYTIME RUNNING LIGHT)	106
HEADLIGHT (w/ DAYTIME RUNNING LIGHT)	98
HEADLIGHT (w/o DAYTIME RUNNING LIGHT)	102
HORN	218
IGNITION (2UZ–FE)	68
IGNITION (5VZ–FE)	72
ILLUMINATION	112
INTEGRATION CONTROL AND PANEL	138
INTERIOR LIGHT	116
KEY REMINDER	210
LIGHT AUTO TURN OFF (w/ DAYTIME RUNNING LIGHT)	124
LIGHT AUTO TURN OFF (w/o DAYTIME RUNNING LIGHT)	128
MIRROR HEATER	226
POWER OUTLET	214
POWER SEAT	230
POWER SOURCE	56
POWER WINDOW	204
RADIO AND PLAYER	232
REMOTE CONTROL MIRROR	228
SEAT BELT WARNING	210
SRS	169
STARTING (2UZ–FE)	64
STARTING (5VZ–FE)	60
STOP LIGHT	122
TAILLIGHT	110
TRAILER TOWING	132
TURN SIGNAL AND HAZARD WARNING LIGHT	120
TVIP	196
WIPER AND WASHER (w/ INT TIME SW MECHANISM)	220
WIPER AND WASHER (w/o INT TIME SW MECHANISM)	224
WIRELESS DOOR LOCK CONTROL	196
4WD (2UZ–FE)	174
4WD (5VZ–FE)	180

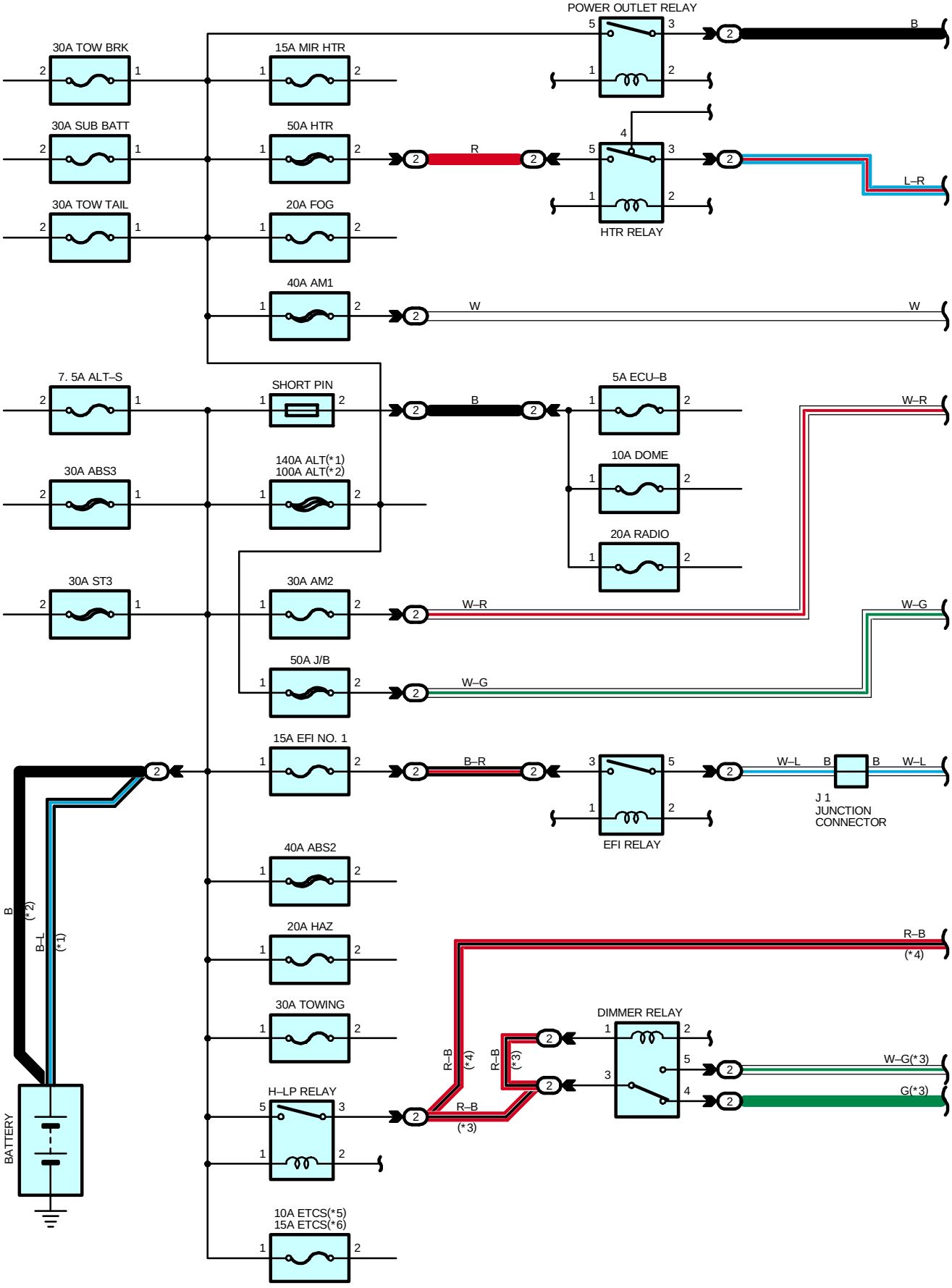
POWER OUTLET RELAY
30A TOW BRK
15A MIR HTR
30A SUB BATT
50A HTR
30A TOW TAIL
20A FOG
HTR RELAY
40A AM1
7. 5A ALT–S
SHORT PIN
5A ECU–B
10A DOME
20A RADIO
30A ABS3
140A ALT(*1)
100A ALT(*2)
30A ST3
30A AM2
50A J/B
15A EFI NO. 1
EFI RELAY
J 1
JUNCTION
CONNECTOR
40A ABS2
20A HAZ
30A TOWING
DIMMER RELAY
H–LP RELAY
10A ETCS(*5)
15A ETCS(*6)
BATTERY
B
B–L
(*1)
(*2)
R–B
(*3)
(*4)
W–G(*3)
G(*3)
L–R
W–R
W–G
W–L

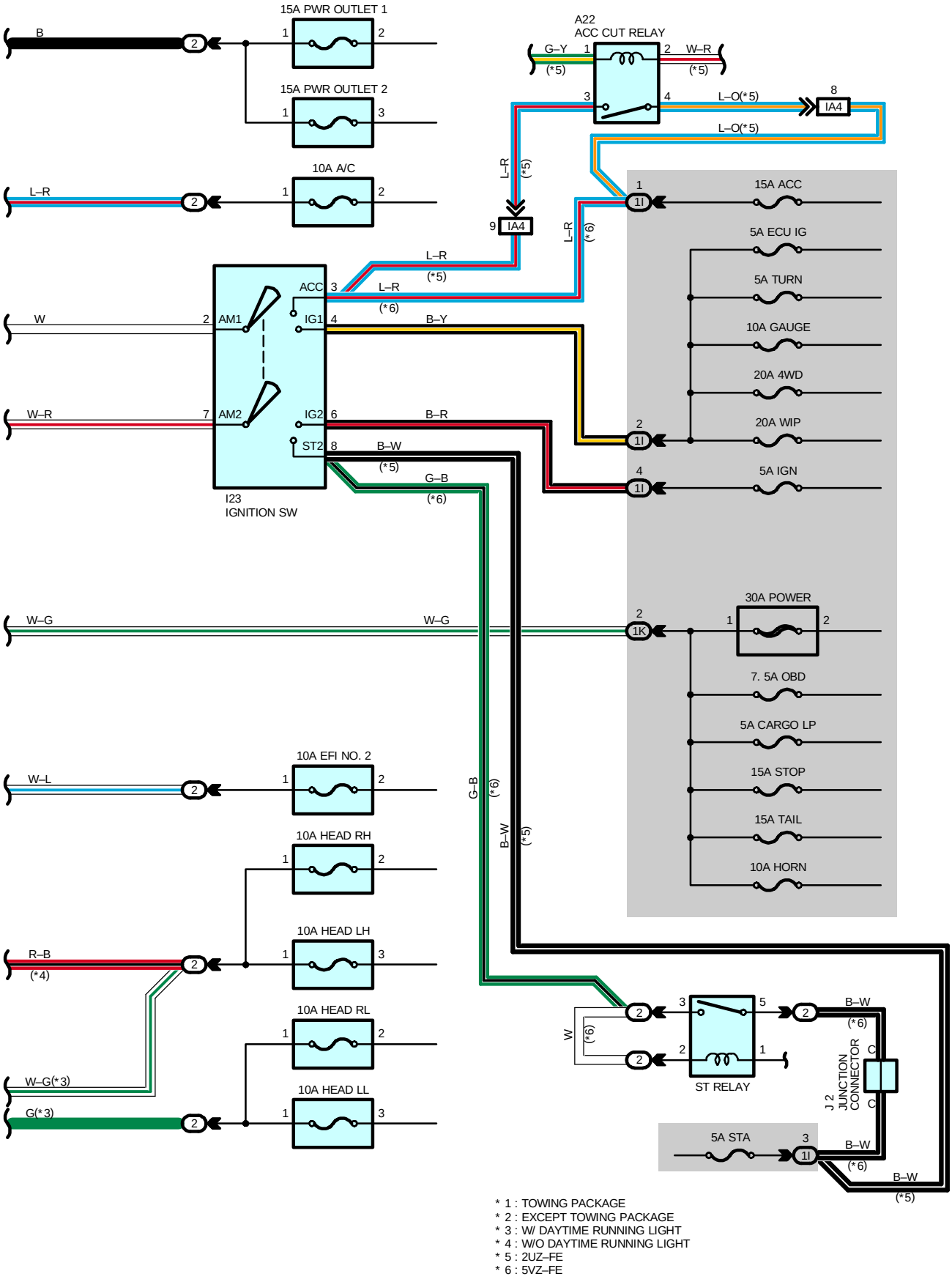

* 1 : TOWING PACKAGE
* 2 : EXCEPT TOWING PACKAGE
* 3 : W/ DAYTIME RUNNING LIGHT
* 4 : W/O DAYTIME RUNNING LIGHT
* 5 : 2UZ–FE
* 6 : 5VZ–FE

POWER SOURCE

SERVICE HINTS

HEATER RELAY

5–3 : Closed with ignition SW on and heater blower SW on

H–LP RELAY

5–3 : Closed with light control SW at **HEAD** position or dimmer SW at **FLASH** position
Closed with engine running and parking brake lever released (w/ daytime running light)

I23 IGNITION SW

2–3 : Closed with ignition key at **ACC** or **ON** position
2–4 : Closed with ignition key at **ON** or **ST** position
7–6 : Closed with ignition key at **ON** or **ST** position

DIMMER RELAY (w/ DAYTIME RUNNING LIGHT)

3–5 : Closed with HEAD relay on and dimmer SW at **HIGH** or **FLASH** position

: PARTS LOCATION

Code	See Page	Code	See Page	Code	See Page
A22	34	J1	31 (2UZ–FE)	J2	31 (2UZ–FE)
I23	35		33 (5VZ–FE)		33 (5VZ–FE)

: RELAY BLOCKS

Code	See Page	Relay Blocks (Relay Block Location)
2	21	Engine Room R/B (Engine Compartment Left)

: JUNCTION BLOCK AND WIRE HARNESS CONNECTOR

Code	See Page	Junction Block and Wire Harness (Connector Location)
1I	22 (*2)	Engine Room Main Wire and Driver Side J/B (Lower Finish Panel)
	26 (*1)	
1K	22 (*2)	
	26 (*1)	

: CONNECTOR JOINING WIRE HARNESS AND WIRE HARNESS

Code	See Page	Joining Wire Harness and Wire Harness (Connector Location)
IA4	44	Engine Room Main Wire and Cowl Wire (Left Kick Panel)

* 1 : w/ Daytime Running Light * 2 : w/o Daytime Running Light * 3 : Bench Seat * 4 : Separate Seat, Captain Seat (w/o Power Seat)

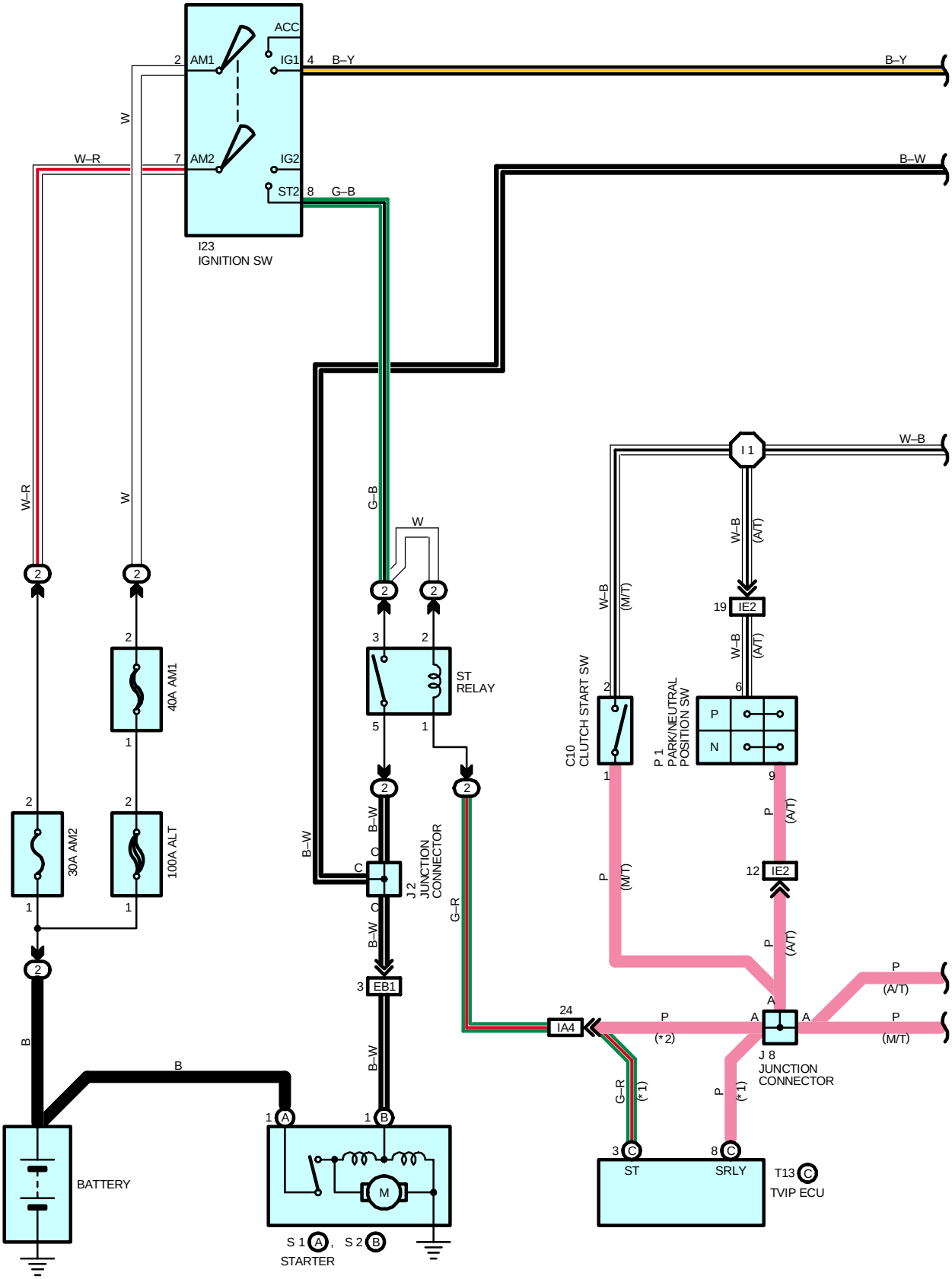
ACC
AM1
IG1
B–Y
B–Y
W
W–R
AM2
IG2
B–W
ST2
G–B
I23
IGNITION SW
W–R
W
G–B
W
W–B
I 1
W–B
(A/T)
W–B
(M/T)
19
IE2
W–B
(A/T)
C10
CLUTCH START SW
P 1
PARK/NEUTRAL
POSITION SW
P
N
40A AM1
30A AM2
100A ALT
ST
RELAY
B–W
J 2
JUNCTION
CONNECTOR
G–R
EB1
B–W
P
(M/T)
P
(A/T)
12
IE2
P
(A/T)
P
(A/T)
24
IA4
P
(*2)
A
A
A
J 8
JUNCTION
CONNECTOR
P
(M/T)
G–R
(*1)
P
(*1)
B
B
BATTERY
M
S 1
A
,
S 2
B
STARTER
3
C
ST
8
C
SRLY
T13
C
TVIP ECU

* 1 : W/ WIRELESS DOOR LOCK CONTROL
* 2 : W/O WIRELESS DOOR LOCK CONTROL

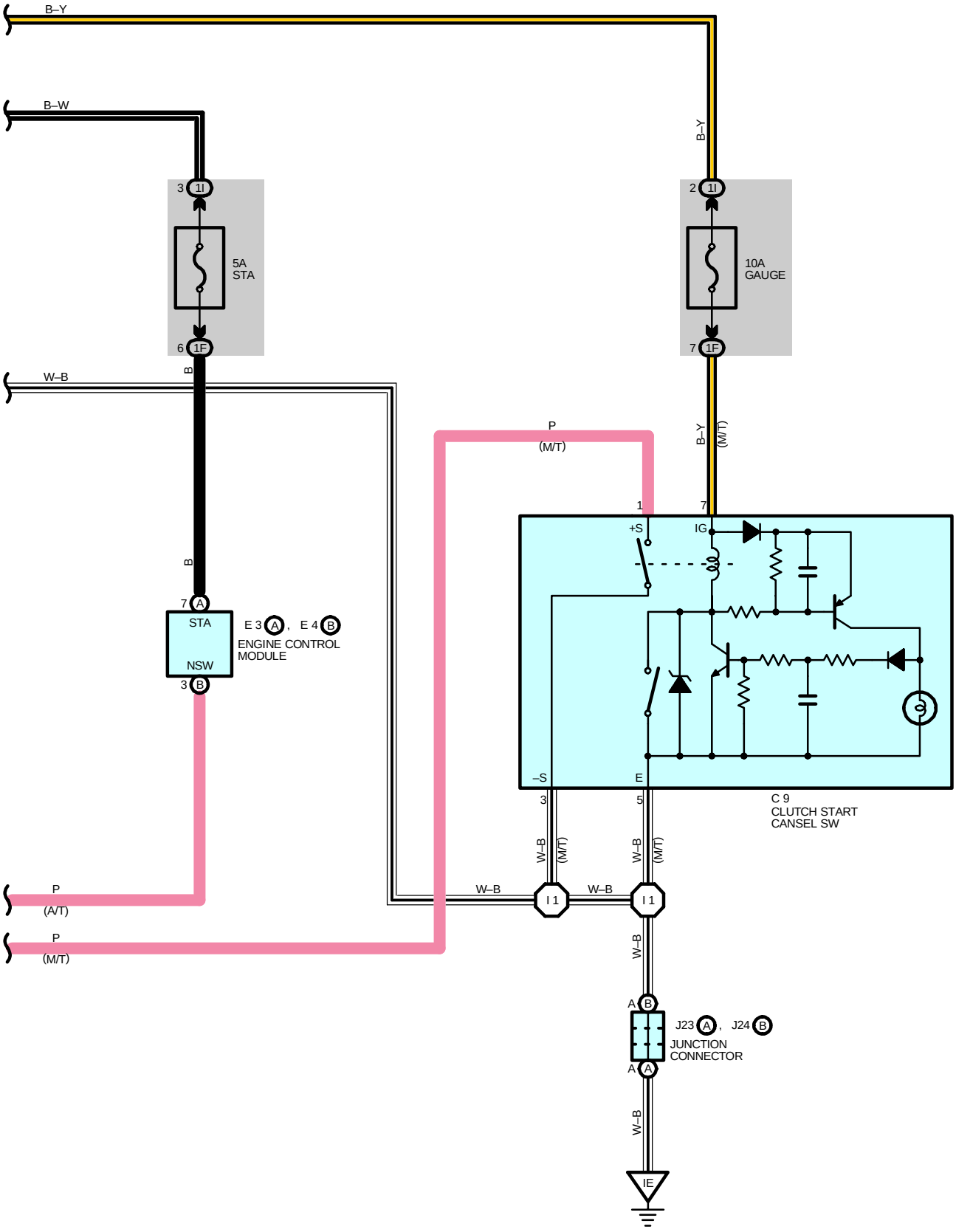

STARTING (5VZ–FE)

SERVICE HINTS

S1 (A), S2 (B) STARTER

Points closed with Park/Neutral position SW at **P** or **N** position and ignition SW at **ST** position (A/T)
Points closed with clutch start SW or clutch start cancel SW on and ignition SW at **ST** position (M/T)

I23 IGNITION SW

2–4 : Closed with ignition SW at **ON** or **ST** position
7–8 : Closed with ignition SW at **ST** position

P1 PARK/NEUTRAL POSITION SW (A/T)

6–9 : Closed with A/T shift lever in **P** or **N** position

ST RELAY

5–3 : Closed with Park/Neutral position SW at **P** or **N** position and ignition SW at **ST** position (A/T)
5–3 : Closed with clutch start SW or clutch start cancel SW on and ignition SW at **ST** position (M/T)

C9 CLUTCH START CANCEL SW (M/T)

1–3 : Closed with ignition SW on and cancel SW on

C10 CLUTCH START SW (M/T)

1–2 : Closed with clutch pedal fully depressed

: PARTS LOCATION

Code		See Page	Code		See Page	Code		See Page
C9		34	J2		33 (5VZ–FE)	S1	A	33 (5VZ–FE)
C10		34	J8		35	S2	B	33 (5VZ–FE)
E3	A	34	J23	A	35	T13	C	35
E4	B	34	J24	B	35			
I23		35	P1		33 (5VZ–FE)			

: RELAY BLOCKS

Code	See Page	Relay Blocks (Relay Block Location)
2	21	Engine Room R/B (Engine Compartment Left)

: JUNCTION BLOCK AND WIRE HARNESS CONNECTOR

Code	See Page	Junction Block and Wire Harness (Connector Location)
1F	22 (*2) 26 (*1)	Cowl Wire and Driver Side J/B (Lower Finish Panel)
1I	22 (*2) 26 (*1)	Engine Room Main Wire and Driver Side J/B (Lower Finish Panel)

: CONNECTOR JOINING WIRE HARNESS AND WIRE HARNESS

Code	See Page	Joining Wire Harness and Wire Harness (Connector Location)
EB1	42 (5VZ–FE)	Engine No.2 Wire and Engine Room Main Wire (Under the Engine Room R/B)
IA4	44	Engine Room Main Wire and Cowl Wire (Left Kick Panel)
IE2	46	Engine Wire and Cowl Wire (Right Side of Instrument Panel)

: GROUND POINTS

Code	See Page	Ground Points Location
IE	44	Left Kick Panel

: SPLICE POINTS

Code	See Page	Wire Harness with Splice Points	Code	See Page	Wire Harness with Splice Points
I1	46	Cowl Wire			

* 1 : w/ Daytime Running Light * 2 : w/o Daytime Running Light * 3 : Bench Seat * 4 : Separate Seat, Captain Seat (w/o Power Seat)

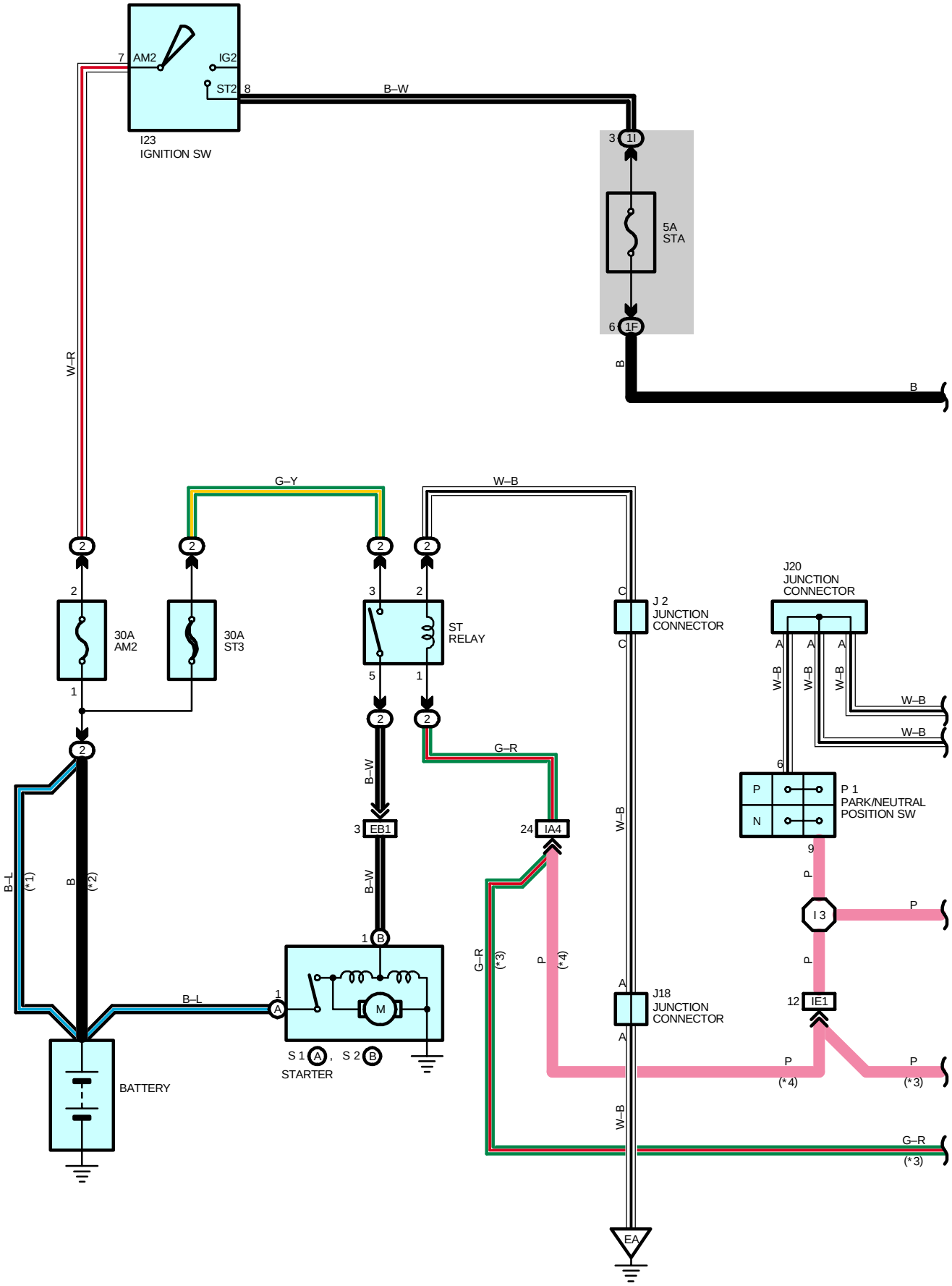
7 AM2
IG2
ST2 8
I23
IGNITION SW
B–W
3 1I
5A
STA
6 1F
B
W–R
B
G–Y
W–B
30A
AM2
30A
ST3
ST
RELAY
C J 2
JUNCTION
CONNECTOR
C
J20
JUNCTION
CONNECTOR
A A A
W–B
W–B
W–B
W–B
W–B
6
P 1
PARK/NEUTRAL
POSITION SW
P
N
9
P
I 3
P
P
12 IE1
P
(*4)
P
(*3)
B–W
3 EB1
B–W
1 B
G–R
24 IA4
W–B
G–R
(*3)
P
(*4)
A J18
JUNCTION
CONNECTOR
A
W–B
G–R
(*3)
B–L
(*1)
B
(*2)
B–L
1
A
M
S 1 A , S 2 B
STARTER
BATTERY
EA

* 1 : TOWING PACKAGE
* 2 : EXCEPT TOWING PACKAGE
* 3 : W/ WIRELESS DOOR LOCK CONTROL
* 4 : W/O WIRELESS DOOR LOCK CONTROL

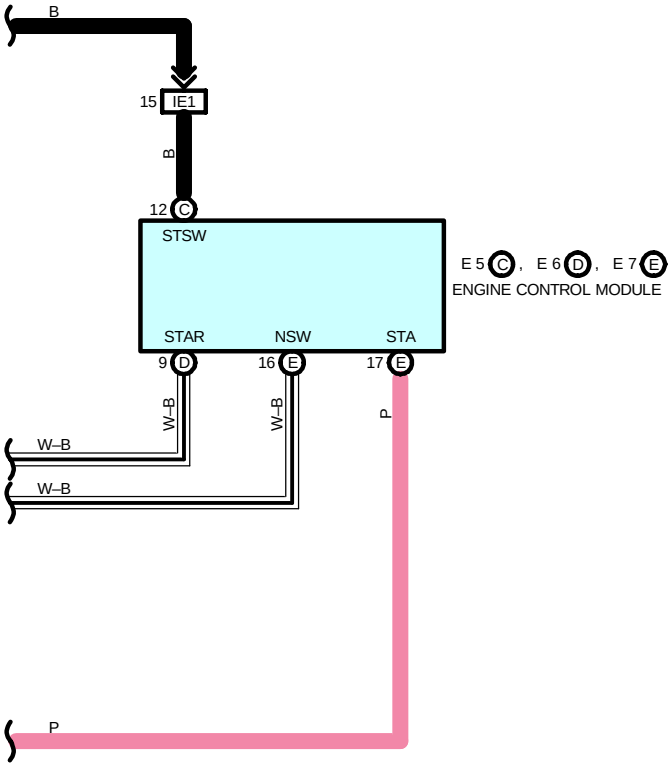

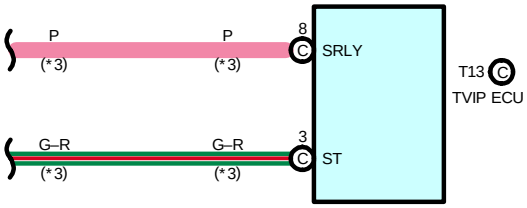

STARTING (2UZ–FE)

SERVICE HINTS

S1 (A), S2 (B) STARTER

Points closed with Park/Neutral position SW at **P** or **N** position and ignition SW at **ST** position

I23 IGNITION SW

7–8 : Closed with ignition SW at **ST** position

P1 PARK/NEUTRAL POSITION SW

6–9 : Closed with A/T shift lever in **P** or **N** position

ST RELAY

5–3 : Closed with Park/Neutral position SW at **P** or **N** position and ignition SW at **ST** position

: PARTS LOCATION

Code		See Page	Code	See Page	Code		See Page
E5	C	34	J2	31 (2UZ–FE)	S1	A	31 (2UZ–FE)
E6	D	34	J18	31 (2UZ–FE)	S2	B	31 (2UZ–FE)
E7	E	34	J20	35	T13	C	35
I23		35	P1	31 (2UZ–FE)			

: RELAY BLOCKS

Code	See Page	Relay Blocks (Relay Block Location)
2	21	Engine Room R/B (Engine Compartment Left)

: JUNCTION BLOCK AND WIRE HARNESS CONNECTOR

Code	See Page	Junction Block and Wire Harness (Connector Location)
1F	22 (*2) 26 (*1)	Cowl Wire and Driver Side J/B (Lower Finish Panel)
1I	22 (*2) 26 (*1)	Engine Room Main Wire and Driver Side J/B (Lower Finish Panel)

: CONNECTOR JOINING WIRE HARNESS AND WIRE HARNESS

Code	See Page	Joining Wire Harness and Wire Harness (Connector Location)
EB1	40 (2UZ–FE)	Engine No.2 Wire and Engine Room Main Wire (Under the Engine Room R/B)
IA4	44	Engine Room Main Wire and Cowl Wire (Left Kick Panel)
IE1	46	Engine Wire and Cowl Wire (Right Side of Instrument Panel)

: GROUND POINTS

Code	See Page	Ground Points Location
EA	40 (2UZ–FE)	Front Left Fender

: SPLICE POINTS

Code	See Page	Wire Harness with Splice Points	Code	See Page	Wire Harness with Splice Points
I3	46	Engine Wire			

* 1 : w/ Daytime Running Light * 2 : w/o Daytime Running Light * 3 : Bench Seat * 4 : Separate Seat, Captain Seat (w/o Power Seat)

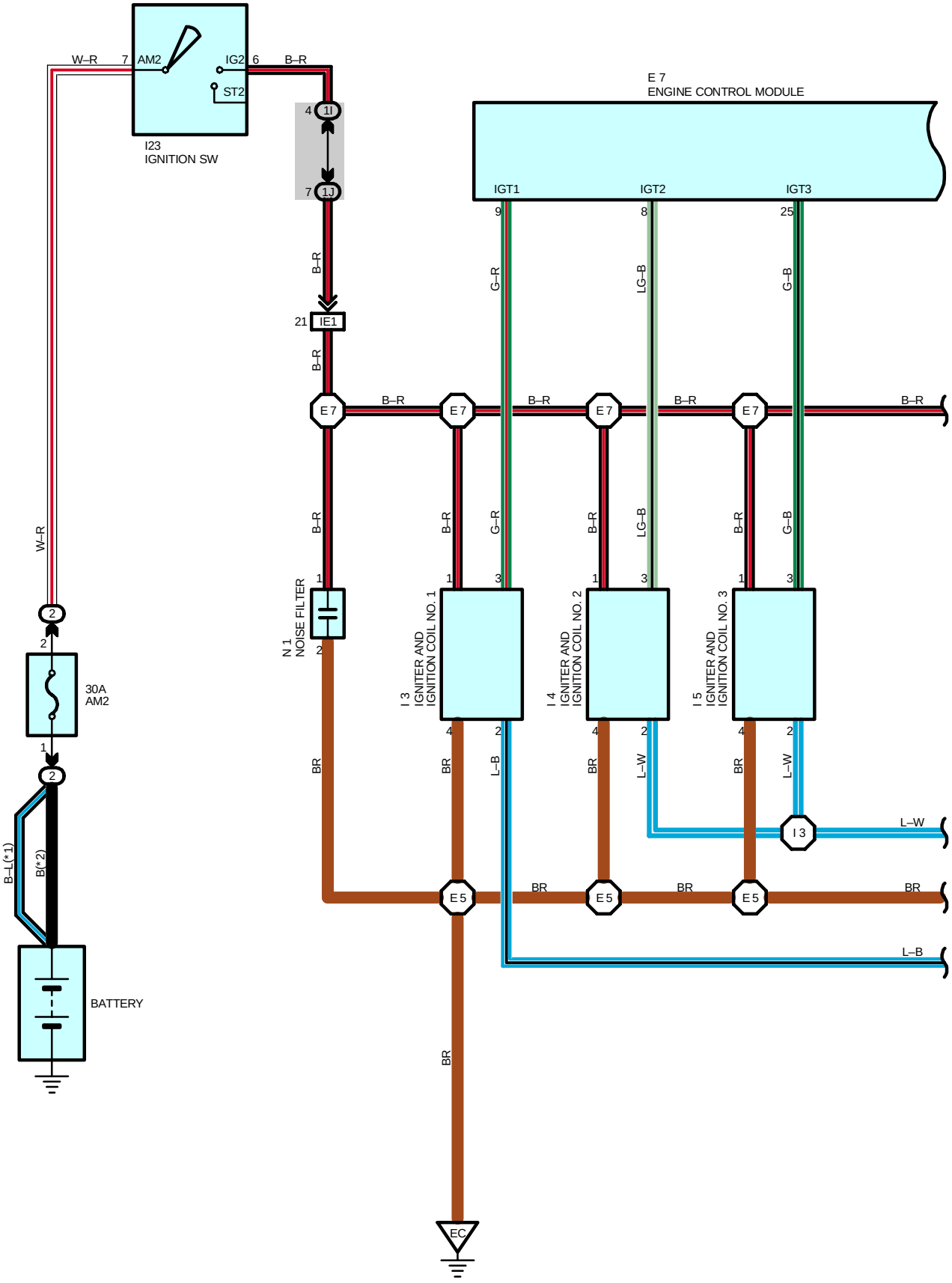
W–R
7
AM2
IG2
6
B–R
ST2
I23
IGNITION SW
4
1J
7
1J
E 7
ENGINE CONTROL MODULE
IGT1
IGT2
IGT3
9
8
25
G–R
LG–B
G–B
B–R
21
IE1
E 7
N 1
NOISE FILTER
I 3
IGNITER AND
IGNITION COIL NO. 1
I 4
IGNITER AND
IGNITION COIL NO. 2
I 5
IGNITER AND
IGNITION COIL NO. 3
L–W
L–B
BR
E 5
I 3
W–R
30A
AM2
B–L(*1)
B(*2)
BATTERY
EC

* 1 : TOWING PACKAGE
* 2 : EXCEPT TOWING PACKAGE

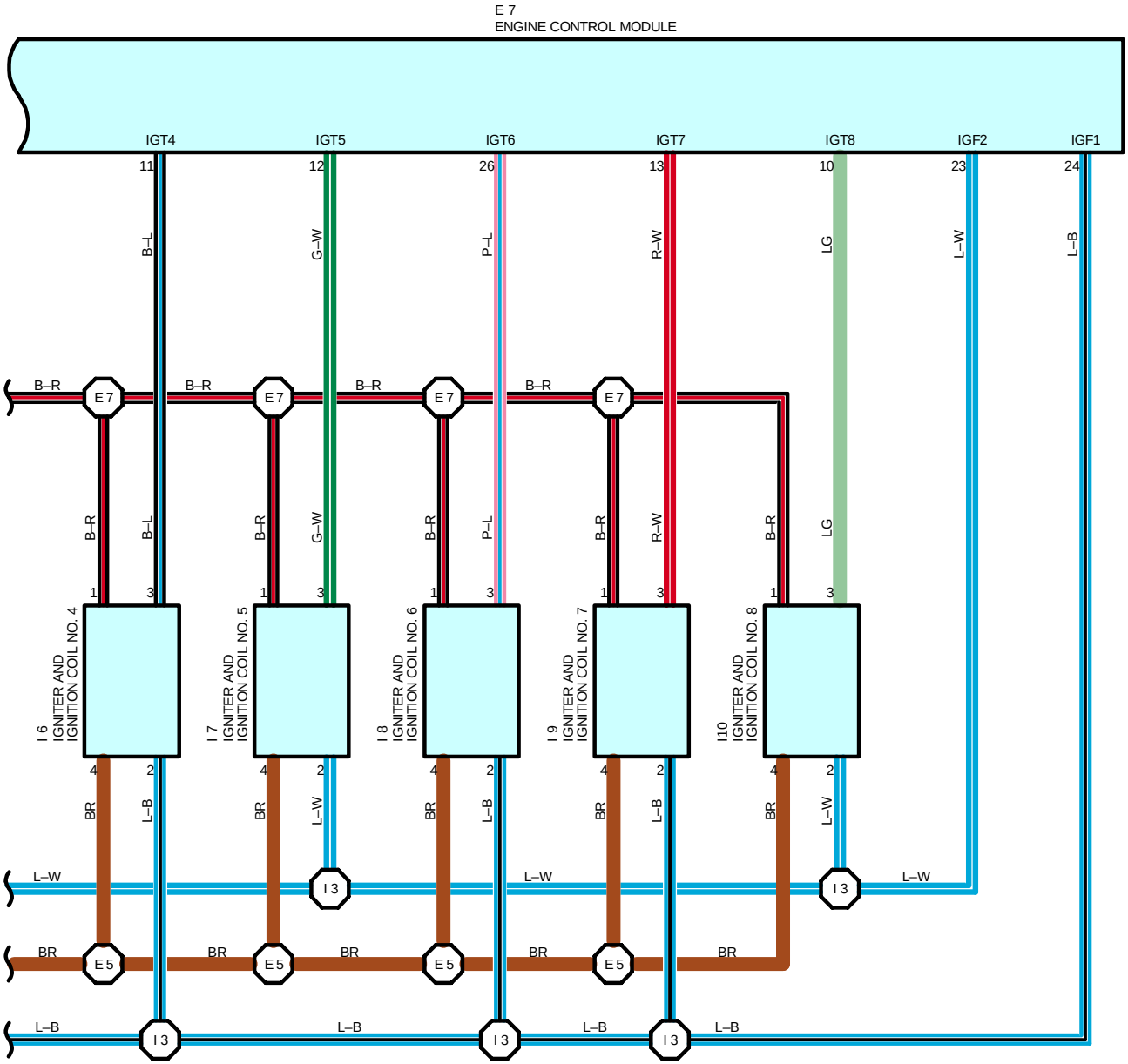

IGNITION (2UZ–FE)

SERVICE HINTS

I23 IGNITION SW

7–6 : Closed with ignition SW at **ON** or **ST** position

: PARTS LOCATION

Code	See Page	Code	See Page	Code	See Page
E7	34	I6	31 (2UZ–FE)	I10	31 (2UZ–FE)
I3	31 (2UZ–FE)	I7	31 (2UZ–FE)	I23	35
I4	31 (2UZ–FE)	I8	31 (2UZ–FE)	N1	31 (2UZ–FE)
I5	31 (2UZ–FE)	I9	31 (2UZ–FE)		

: RELAY BLOCKS

Code	See Page	Relay Blocks (Relay Block Location)
2	21	Engine Room R/B (Engine Compartment Left)

: JUNCTION BLOCK AND WIRE HARNESS CONNECTOR

Code	See Page	Junction Block and Wire Harness (Connector Location)
1I	22 (*2) 26 (*1)	Engine Room Main Wire and Driver Side J/B (Lower Finish Panel)
1J	22 (*2) 26 (*1)	Cowl Wire and Driver Side J/B (Lower Finish Panel)

: CONNECTOR JOINING WIRE HARNESS AND WIRE HARNESS

Code	See Page	Joining Wire Harness and Wire Harness (Connector Location)
IE1	46	Engine Wire and Cowl Wire (Right Side of Instrument Panel)

: GROUND POINTS

Code	See Page	Ground Points Location
EC	40 (2UZ–FE)	Rear Bank of Left Cylinder Head

: SPLICE POINTS

Code	See Page	Wire Harness with Splice Points	Code	See Page	Wire Harness with Splice Points
E5	40 (2UZ–FE)	Engine Wire	I3	46	Engine Wire
E7					

* 1 : w/ Daytime Running Light * 2 : w/o Daytime Running Light * 3 : Bench Seat * 4 : Separate Seat, Captain Seat (w/o Power Seat)

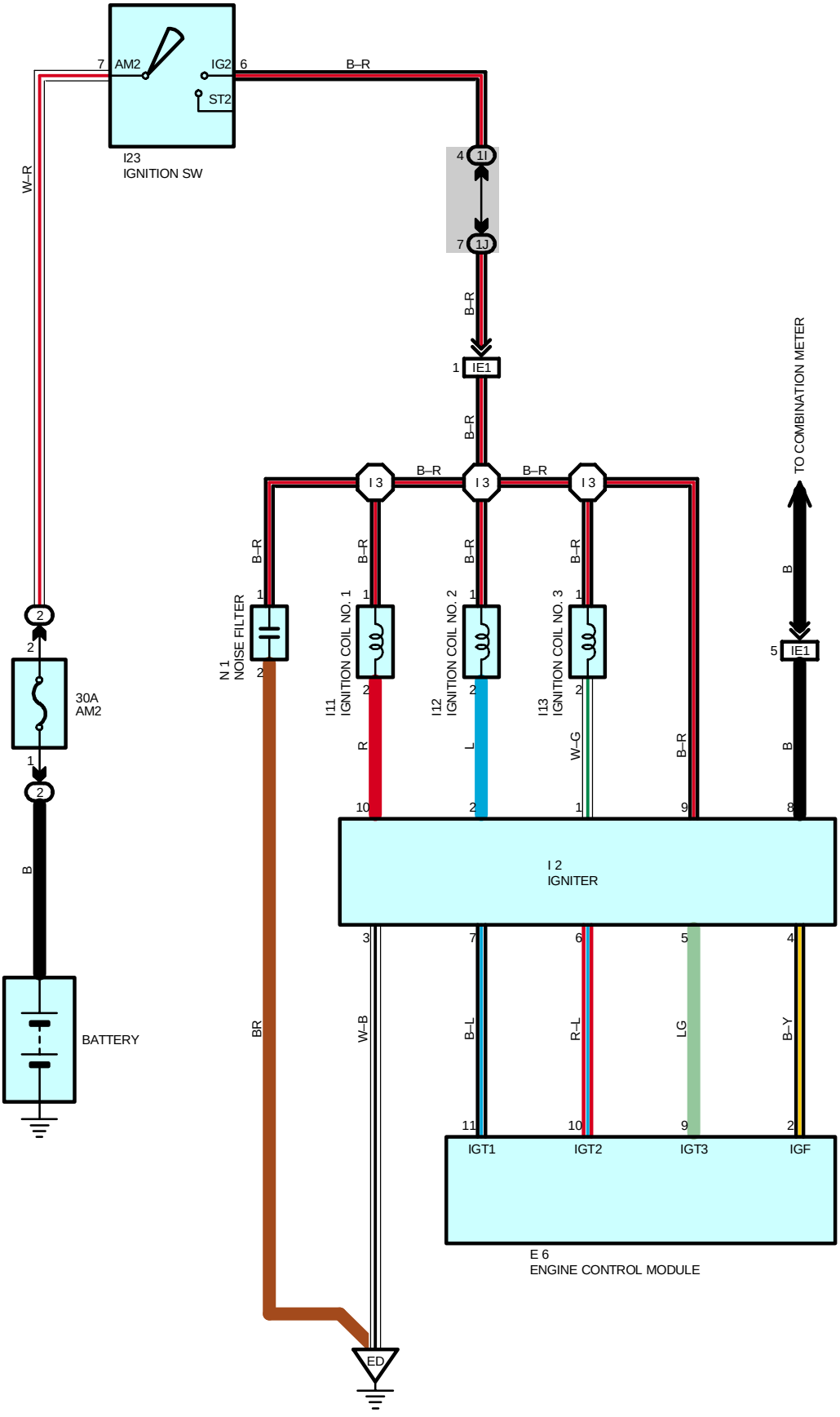
7 AM2
IG2 6
ST2
I23
IGNITION SW
B–R
W–R
4 1I
7 1J
B–R
1 IE1
B–R
I 3
B–R
I 3
B–R
I 3
TO COMBINATION METER
B
5 IE1
B
8
B–R
B–R
B–R
B–R
1
1
1
1
N 1
NOISE FILTER
2
I11
IGNITION COIL NO. 1
2
I12
IGNITION COIL NO. 2
2
I13
IGNITION COIL NO. 3
2
R
L
W–G
B–R
10
2
1
9
2
30A
AM2
1
B
BATTERY
I 2
IGNITER
3
7
6
5
4
W–B
B–L
R–L
LG
B–Y
BR
11
10
9
2
IGT1
IGT2
IGT3
IGF
E 6
ENGINE CONTROL MODULE
ED

SERVICE HINTS

I23 IGNITION SW

7–6 : Closed with ignition SW at **ON** or **ST** position

: PARTS LOCATION

Code	See Page	Code	See Page	Code	See Page
E6	34	I12	33 (5VZ–FE)	N1	33 (5VZ–FE)
I2	33 (5VZ–FE)	I13	33 (5VZ–FE)		
I11	33 (5VZ–FE)	I23	35		

: RELAY BLOCKS

Code	See Page	Relay Blocks (Relay Block Location)
2	21	Engine Room R/B (Engine Compartment Left)

: JUNCTION BLOCK AND WIRE HARNESS CONNECTOR

Code	See Page	Junction Block and Wire Harness (Connector Location)
1I	22 (*2) 26 (*1)	Engine Room Main Wire and Driver Side J/B (Lower Finish Panel)
1J	22 (*2) 26 (*1)	Cowl Wire and Driver Side J/B (Lower Finish Panel)

: CONNECTOR JOINING WIRE HARNESS AND WIRE HARNESS

Code	See Page	Joining Wire Harness and Wire Harness (Connector Location)
IE1	46	Engine Wire and Cowl Wire (Right Side of Instrument Panel)

: GROUND POINTS

Code	See Page	Ground Points Location
ED	42 (5VZ–FE)	Intake Manifold Left

: SPLICE POINTS

Code	See Page	Wire Harness with Splice Points	Code	See Page	Wire Harness with Splice Points
I3	46	Engine Wire			

* 1 : w/ Daytime Running Light * 2 : w/o Daytime Running Light * 3 : Bench Seat * 4 : Separate Seat, Captain Seat (w/o Power Seat)

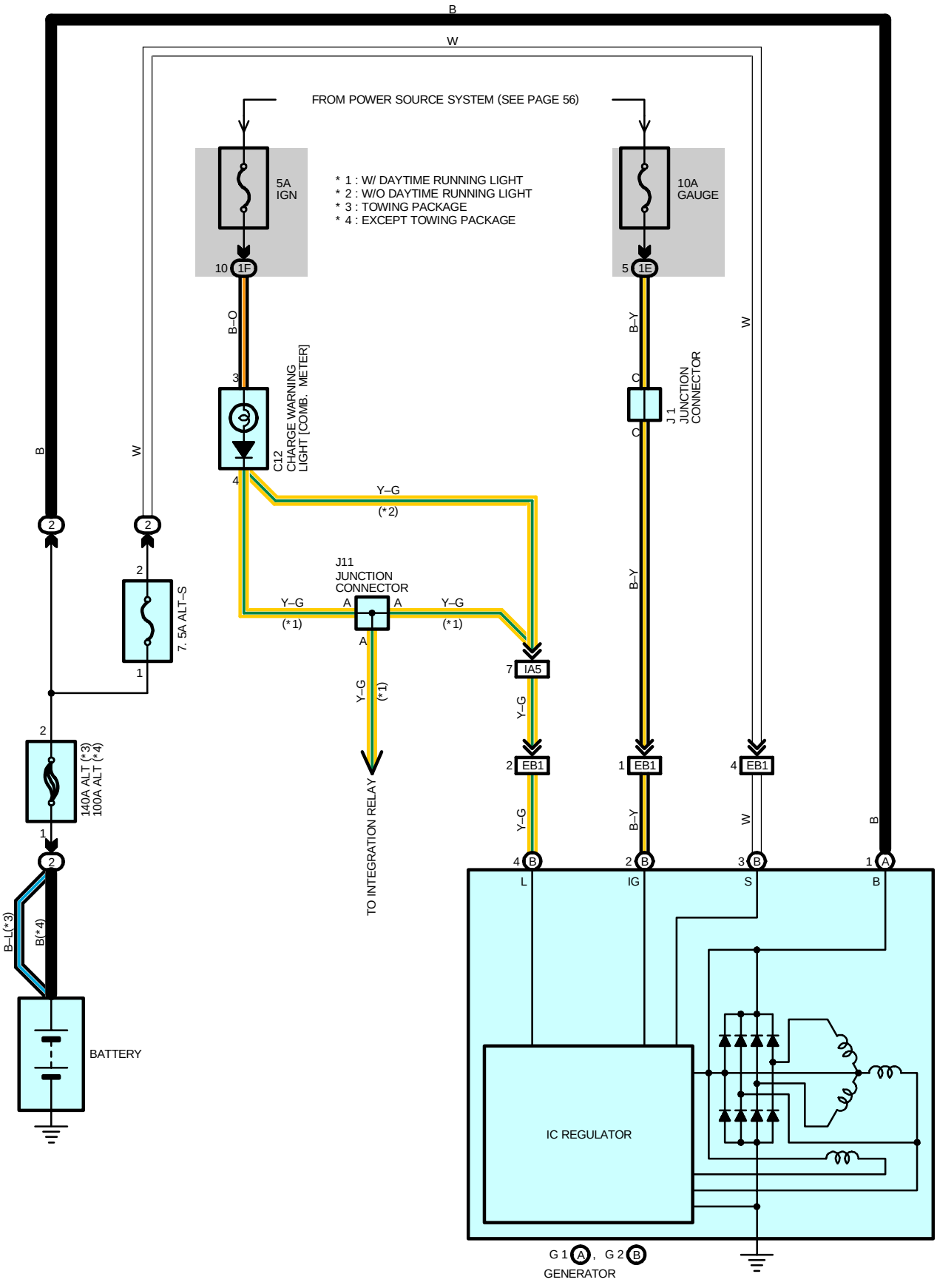
B
W
FROM POWER SOURCE SYSTEM (SEE PAGE 56)
5A
IGN
10A
GAUGE
* 1 : W/ DAYTIME RUNNING LIGHT
* 2 : W/O DAYTIME RUNNING LIGHT
* 3 : TOWING PACKAGE
* 4 : EXCEPT TOWING PACKAGE
10
1F
5
1E
B–O
B–Y
W
C12
CHARGE WARNING
LIGHT [COMB. METER]
J1
JUNCTION
CONNECTOR
Y–G
(*2)
J11
JUNCTION
CONNECTOR
Y–G
(*1)
A
7. 5A ALT–S
IA5
TO INTEGRATION RELAY
EB1
140A ALT (*3)
100A ALT (*4)
B–L(*3)
B(*4)
BATTERY
L
IG
S
B
IC REGULATOR
G 1
A
, G 2
B
GENERATOR

SERVICE HINTS

G2 (B) GENERATOR

(B) 3–GROUND : **13.9**–**15.1** volts with engine running at **2000** rpm and **25**˚C (**77**˚F)
13.5–**14.3** volts with engine running at **2000** rpm and **115**˚C (**239**˚F)
(B) 1–GROUND : **0**–**4** volts with ignition SW at **ON** position and engine not running

: PARTS LOCATION

Code		See Page	Code		See Page	Code	See Page
C12		34	G2	B	30 (2UZ–FE)	J1	33 (5VZ–FE)
G1	A	30 (2UZ–FE)			32 (5VZ–FE)	J11	35
		32 (5VZ–FE)	J1		31 (2UZ–FE)		

: RELAY BLOCKS

Code	See Page	Relay Blocks (Relay Block Location)
2	21	Engine Room R/B (Engine Compartment Left)

: JUNCTION BLOCK AND WIRE HARNESS CONNECTOR

Code	See Page	Junction Block and Wire Harness (Connector Location)
1E	22 (*2)	Engine Room Main Wire and Driver Side J/B (Lower Finish Panel)
	26 (*1)	
1F	22 (*2)	Cowl Wire and Driver Side J/B (Lower Finish Panel)
	26 (*1)	

: CONNECTOR JOINING WIRE HARNESS AND WIRE HARNESS

Code	See Page	Joining Wire Harness and Wire Harness (Connector Location)
EB1	40 (2UZ–FE)	Engine No.2 Wire and Engine Room Main Wire (Under the Engine Room R/B)
	42 (5VZ–FE)	
IA5	44	Engine Room Main Wire and Cowl Wire (Left Kick Panel)

* 1 : w/ Daytime Running Light * 2 : w/o Daytime Running Light * 3 : Bench Seat * 4 : Separate Seat, Captain Seat (w/o Power Seat)

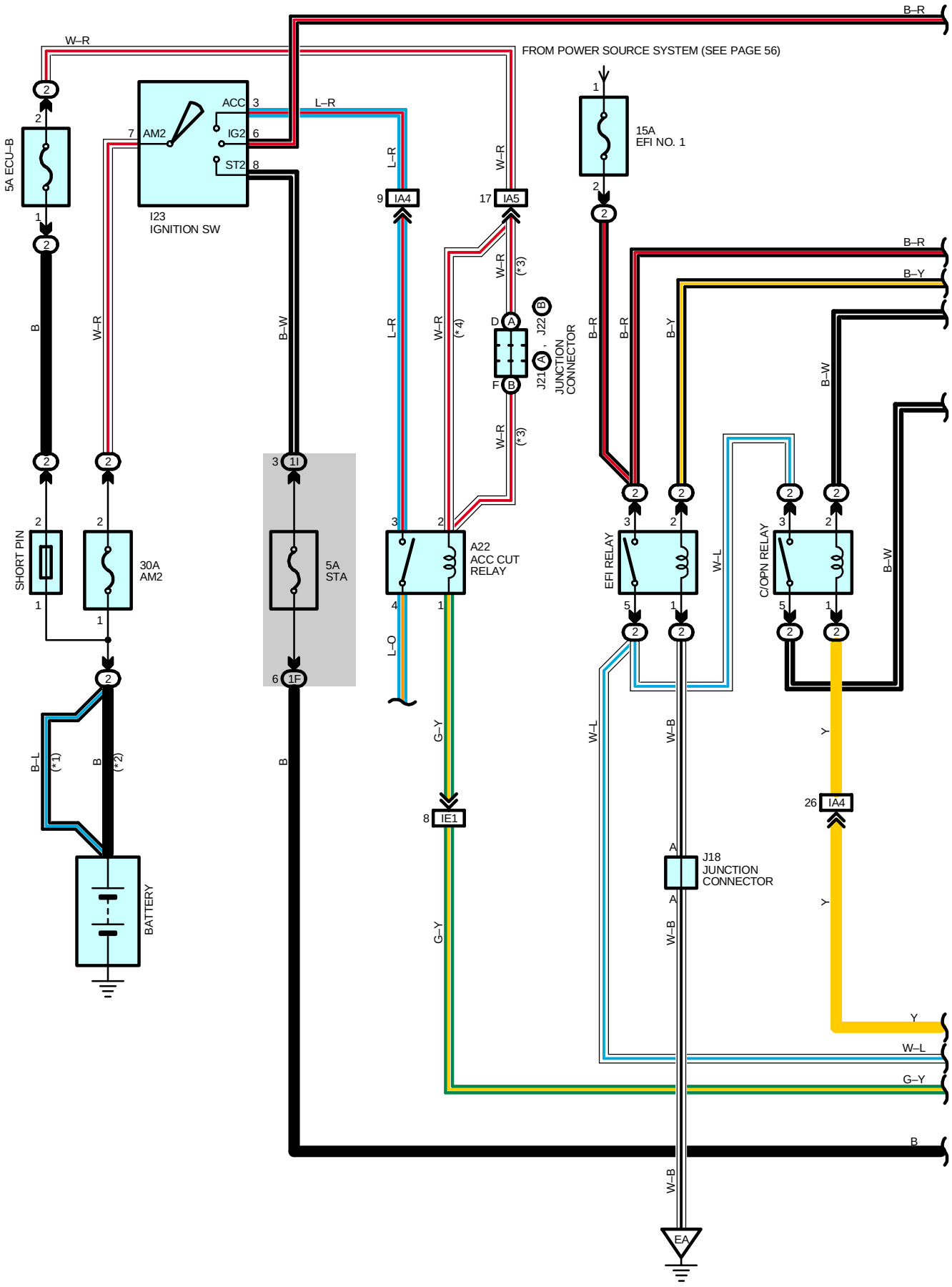
B–R
W–R
FROM POWER SOURCE SYSTEM (SEE PAGE 56)
5A ECU–B
I23
IGNITION SW
ACC
IG2
ST2
AM2
L–R
W–R
B–W
B–Y
B
15A
EFI NO. 1
IA4
IA5
J22
J21
JUNCTION
CONNECTOR
SHORT PIN
30A
AM2
5A
STA
A22
ACC CUT
RELAY
EFI RELAY
C/OPN RELAY
W–L
L–O
G–Y
W–B
Y
B–L
(*1)
(*2)
(*3)
(*4)
IE1
J18
JUNCTION
CONNECTOR
BATTERY
EA

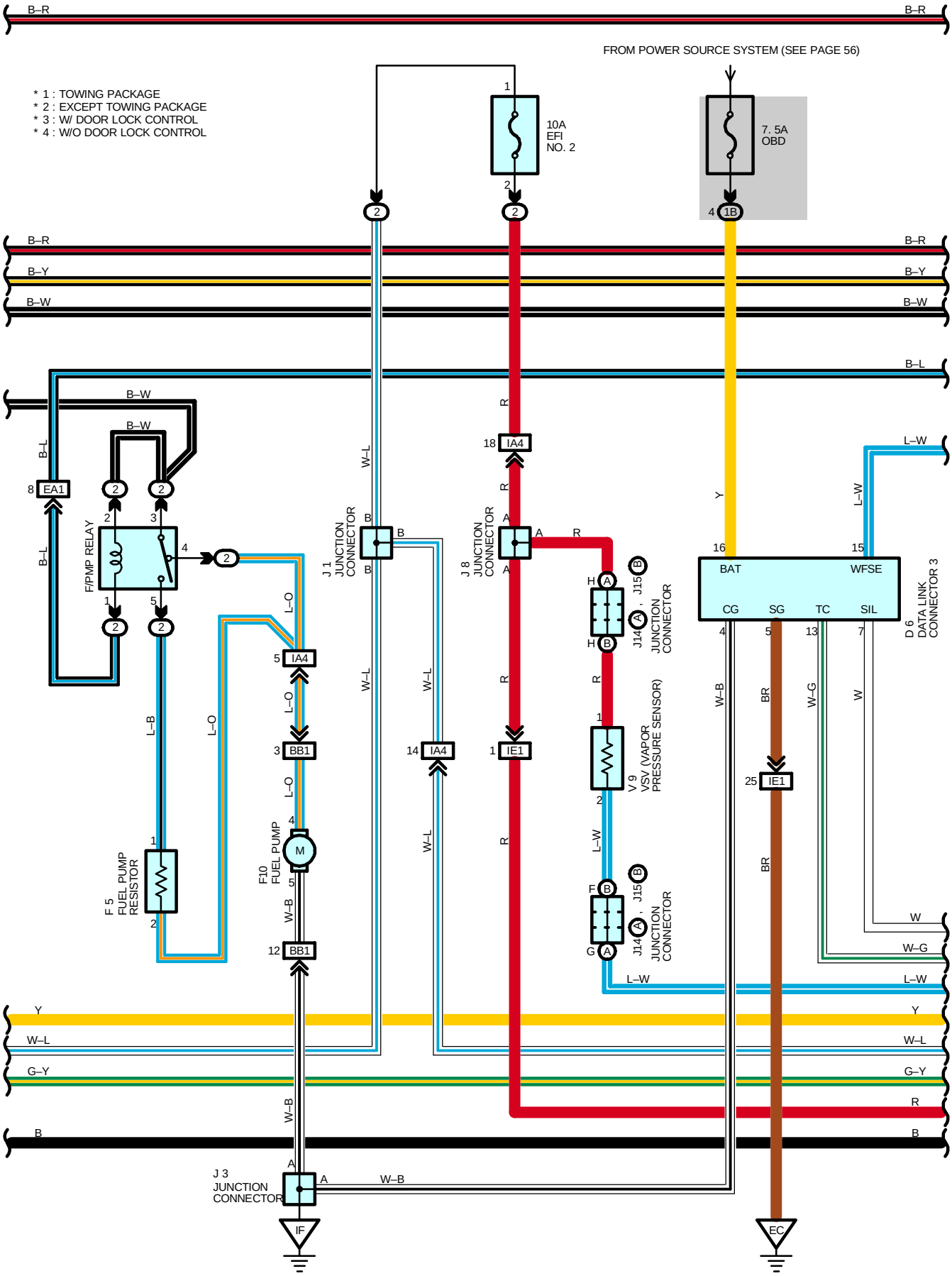
FROM POWER SOURCE SYSTEM (SEE PAGE 56)
* 1 : TOWING PACKAGE
* 2 : EXCEPT TOWING PACKAGE
* 3 : W/ DOOR LOCK CONTROL
* 4 : W/O DOOR LOCK CONTROL
10A EFI NO. 2
7. 5A OBD
B–R
B–Y
B–W
B–L
W–L
L–O
L–B
L–W
W–B
W–G
G–Y
R
Y
BR
W
B
F/PMP RELAY
EA1
J 1 JUNCTION CONNECTOR
J 8 JUNCTION CONNECTOR
IA4
IE1
BB1
F 5 FUEL PUMP RESISTOR
F10 FUEL PUMP
V 9 VSV (VAPOR PRESSURE SENSOR)
J14 , J15 JUNCTION CONNECTOR
BAT
WFSE
CG
SG
TC
SIL
D 6 DATA LINK CONNECTOR 3
J 3 JUNCTION CONNECTOR
IF
EC

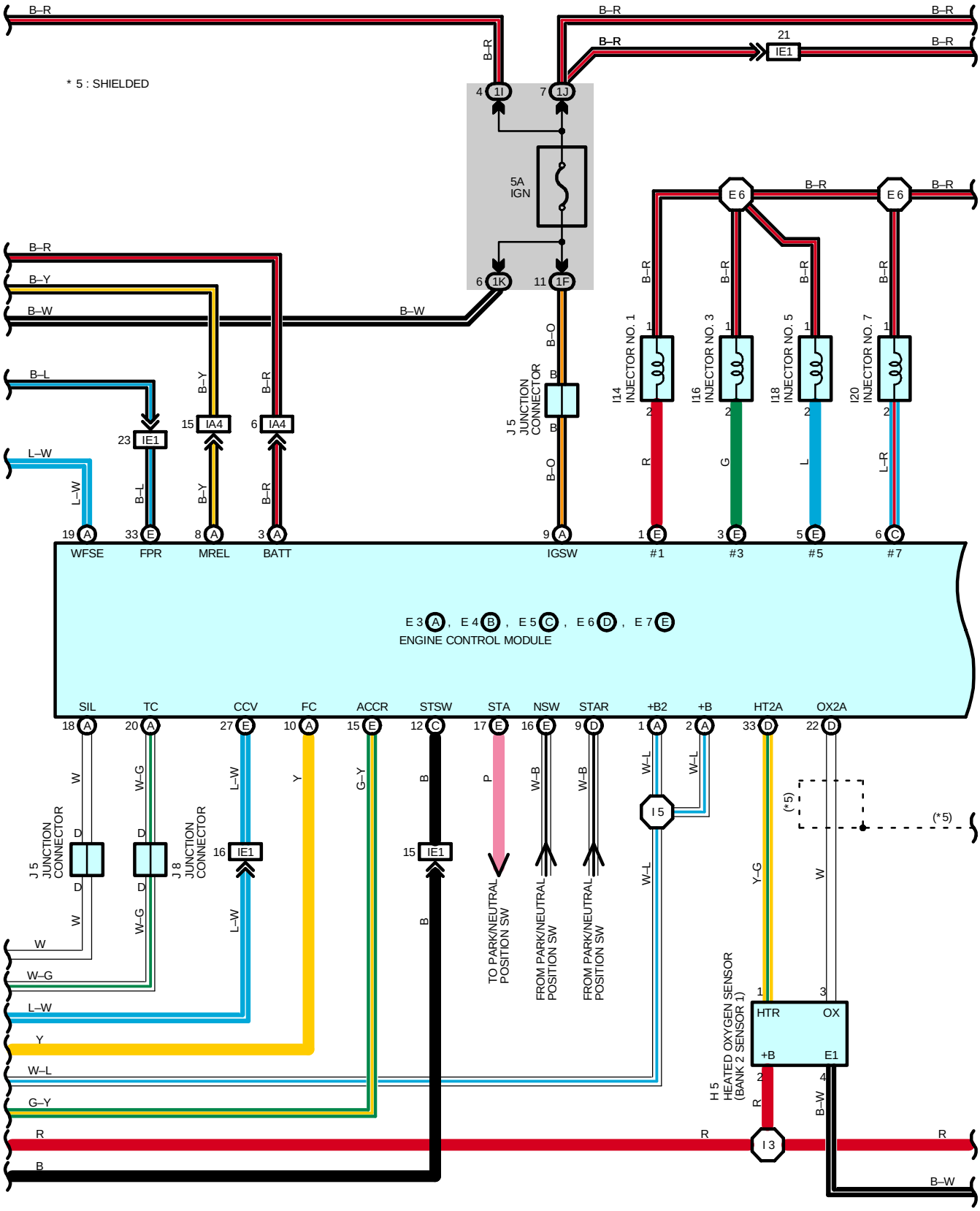
* 5 : SHIELDED
B–R
B–Y
B–W
B–L
L–W
L–R
G
Y
W
W–G
W–L
G–Y
B
R
P
Y–G
B–O
W–B
5A IGN
J 5 JUNCTION CONNECTOR
J 8 JUNCTION CONNECTOR
I14 INJECTOR NO. 1
I16 INJECTOR NO. 3
I18 INJECTOR NO. 5
I20 INJECTOR NO. 7
1I
1J
1K
1F
IE1
IA4
E 6
I 5
I 3
H 5 HEATED OXYGEN SENSOR (BANK 2 SENSOR 1)
HTR
OX
+B
E1
WFSE
FPR
MREL
BATT
IGSW
#1
#3
#5
#7
E 3 A , E 4 B , E 5 C , E 6 D , E 7 E
ENGINE CONTROL MODULE
SIL
TC
CCV
FC
ACCR
STSW
STA
NSW
STAR
+B2
+B
HT2A
OX2A
TO PARK/NEUTRAL POSITION SW
FROM PARK/NEUTRAL POSITION SW
FROM PARK/NEUTRAL POSITION SW
(*5)

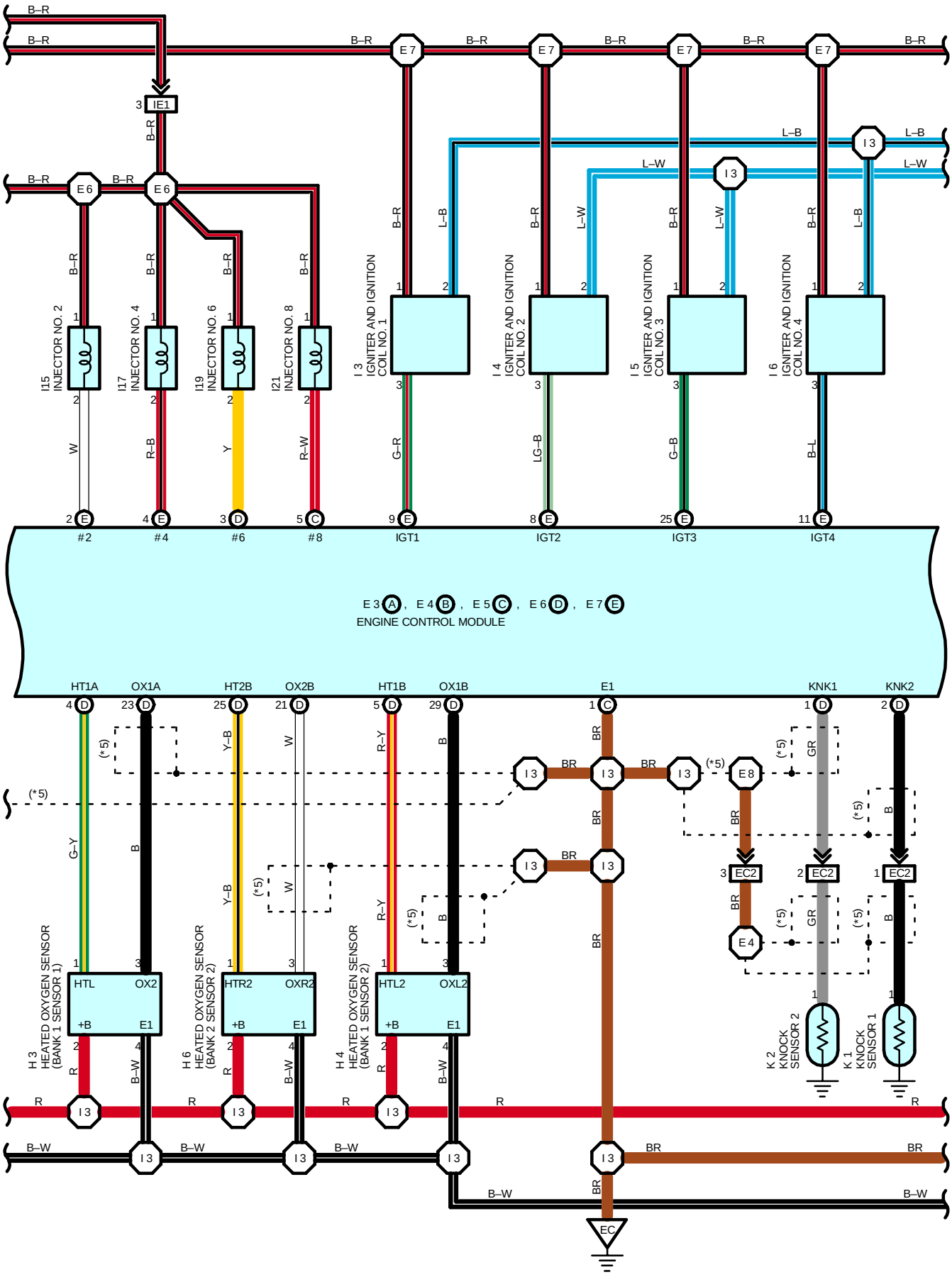
B–R
E 7
IE1
E 6
I 3
L–B
L–W
I15 INJECTOR NO. 2
I17 INJECTOR NO. 4
I19 INJECTOR NO. 6
I21 INJECTOR NO. 8
I 3 IGNITER AND IGNITION COIL NO. 1
I 4 IGNITER AND IGNITION COIL NO. 2
I 5 IGNITER AND IGNITION COIL NO. 3
I 6 IGNITER AND IGNITION COIL NO. 4
W
R–B
Y
R–W
G–R
LG–B
G–B
B–L
#2
#4
#6
#8
IGT1
IGT2
IGT3
IGT4
E 3 A , E 4 B , E 5 C , E 6 D , E 7 E
ENGINE CONTROL MODULE
HT1A
OX1A
HT2B
OX2B
HT1B
OX1B
E1
KNK1
KNK2
G–Y
B
Y–B
W
R–Y
BR
GR
(*5)
E 8
E 4
EC2
H 3 HEATED OXYGEN SENSOR (BANK 1 SENSOR 1)
H 6 HEATED OXYGEN SENSOR (BANK 2 SENSOR 2)
H 4 HEATED OXYGEN SENSOR (BANK 1 SENSOR 2)
HTL
OX2
HTR2
OXR2
HTL2
OXL2
+B
R
B–W
K 2 KNOCK SENSOR 2
K 1 KNOCK SENSOR 1
EC

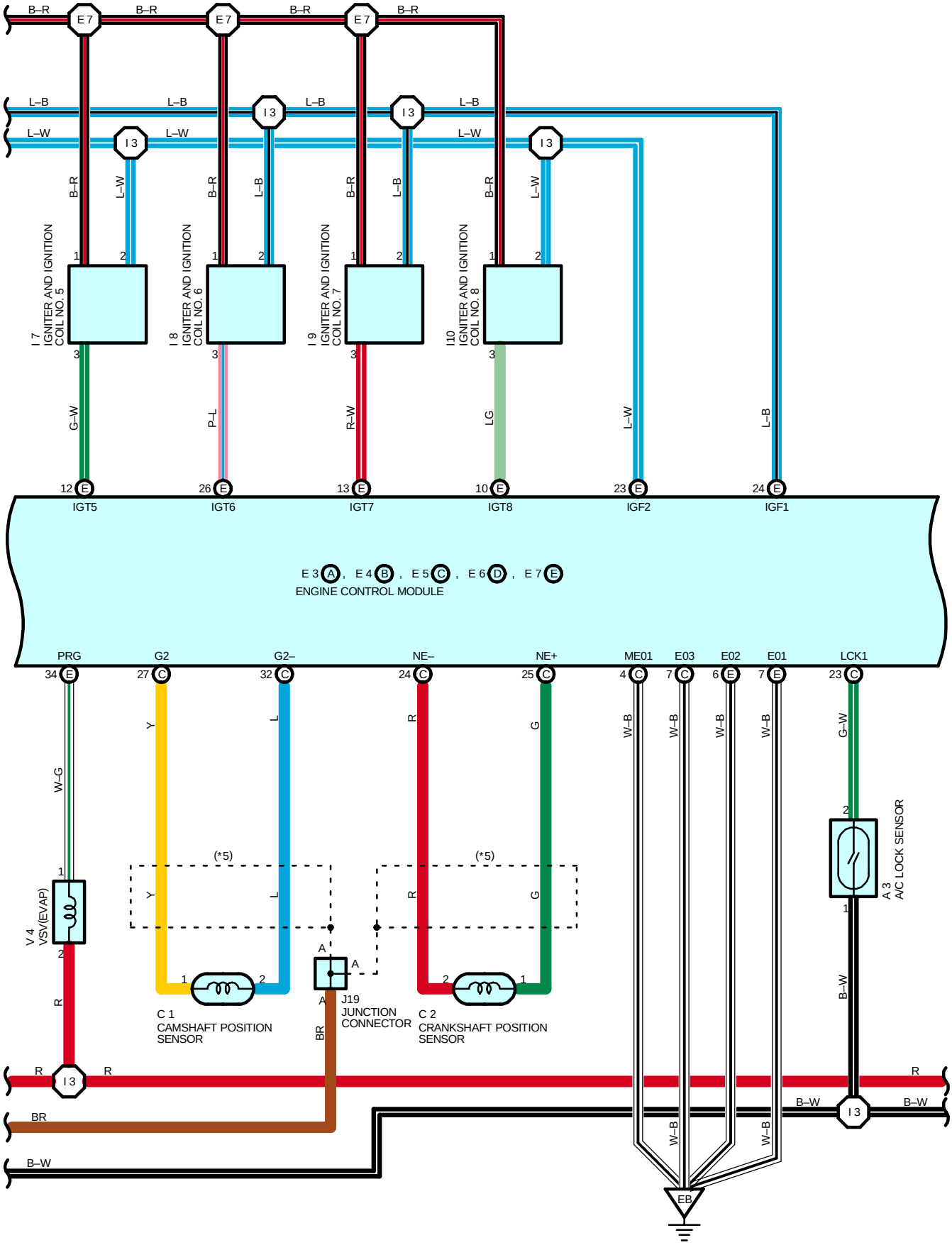
B–R
E 7
L–B
L–W
I 3
I 7 IGNITER AND IGNITION COIL NO. 5
I 8 IGNITER AND IGNITION COIL NO. 6
I 9 IGNITER AND IGNITION COIL NO. 7
I10 IGNITER AND IGNITION COIL NO. 8
G–W
P–L
R–W
LG
IGT5
IGT6
IGT7
IGT8
IGF2
IGF1
E 3 A , E 4 B , E 5 C , E 6 D , E 7 E
ENGINE CONTROL MODULE
PRG
G2
G2–
NE–
NE+
ME01
E03
E02
E01
LCK1
W–G
Y
L
R
G
W–B
G–W
B–W
(*5)
V 4 VSV(EVAP)
C 1 CAMSHAFT POSITION SENSOR
J19 JUNCTION CONNECTOR
C 2 CRANKSHAFT POSITION SENSOR
A 3 A/C LOCK SENSOR
BR
EB

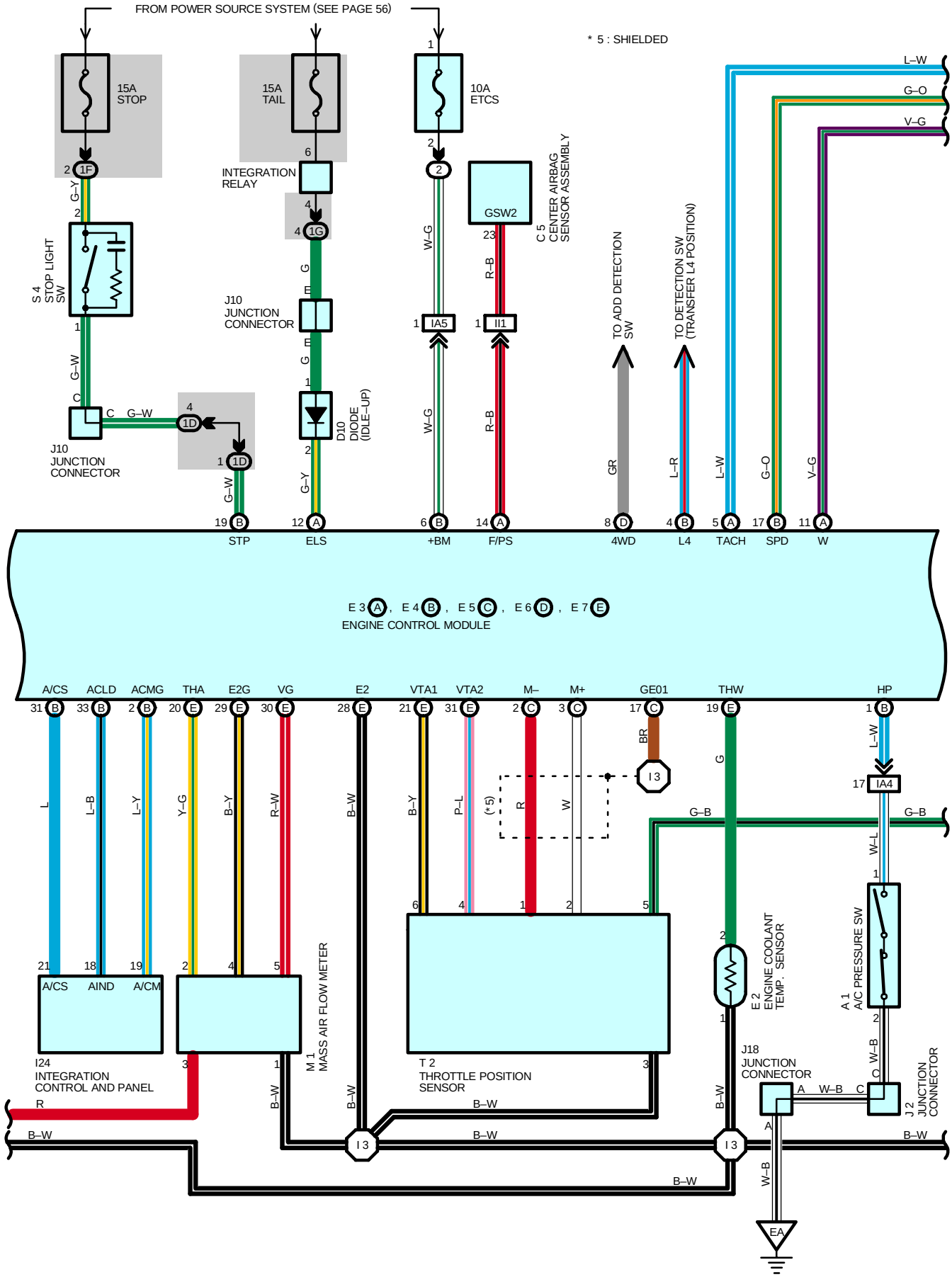
FROM POWER SOURCE SYSTEM (SEE PAGE 56)
* 5 : SHIELDED
15A STOP
15A TAIL
10A ETCS
INTEGRATION RELAY
S 4 STOP LIGHT SW
J10 JUNCTION CONNECTOR
D10 DIODE (IDLE–UP)
GSW2
C 5 CENTER AIRBAG SENSOR ASSEMBLY
TO ADD DETECTION SW
TO DETECTION SW (TRANSFER L4 POSITION)
STP
ELS
+BM
F/PS
4WD
L4
TACH
SPD
W
E3 A , E4 B , E5 C , E6 D , E7 E
ENGINE CONTROL MODULE
A/CS
ACLD
ACMG
THA
E2G
VG
E2
VTA1
VTA2
M–
M+
GE01
THW
HP
I24 INTEGRATION CONTROL AND PANEL
M 1 MASS AIR FLOW METER
T 2 THROTTLE POSITION SENSOR
E 2 ENGINE COOLANT TEMP. SENSOR
A 1 A/C PRESSURE SW
J18 JUNCTION CONNECTOR
J 2 JUNCTION CONNECTOR
EA

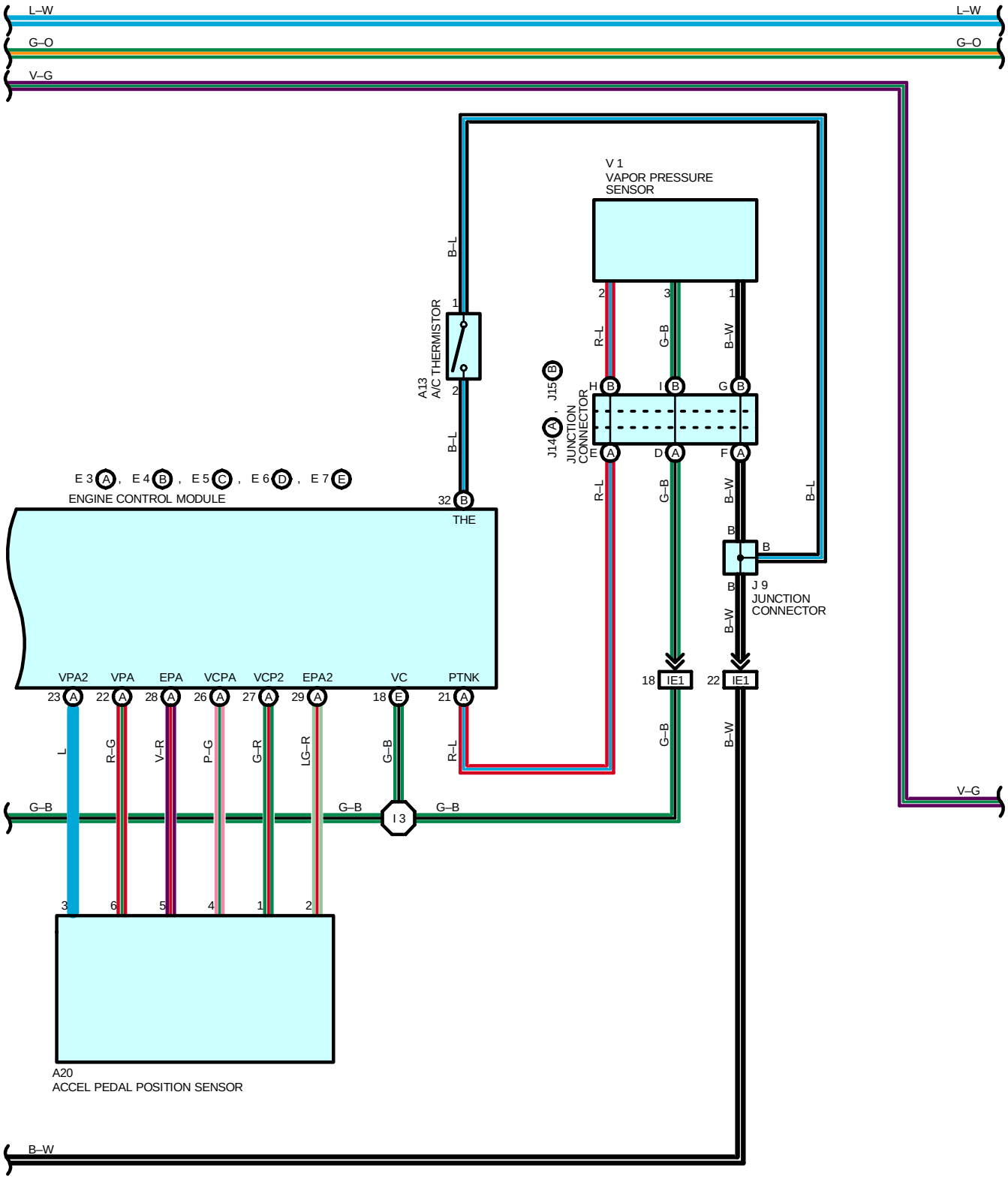
L–W
G–O
V–G
L–W
G–O
V–G
V 1
VAPOR PRESSURE
SENSOR
B–L
1
2
A13
A/C THERMISTOR
B–L
32
THE
E 3 A , E 4 B , E 5 C , E 6 D , E 7 E
ENGINE CONTROL MODULE
2
3
1
R–L
G–B
B–W
J14 A , J15 B
JUNCTION
CONNECTOR
H B
I B
G B
E A
D A
F A
R–L
G–B
B–W
B–L
B
B
B
J 9
JUNCTION
CONNECTOR
B–W
VPA2
VPA
EPA
VCPA
VCP2
EPA2
VC
PTNK
23 A
22 A
28 A
26 A
27 A
29 A
18 E
21 A
18
IE1
22
IE1
L
R–G
V–R
P–G
G–R
LG–R
G–B
R–L
G–B
B–W
G–B
G–B
G–B
I 3
V–G
3
6
5
4
1
2
A20
ACCEL PEDAL POSITION SENSOR
B–W

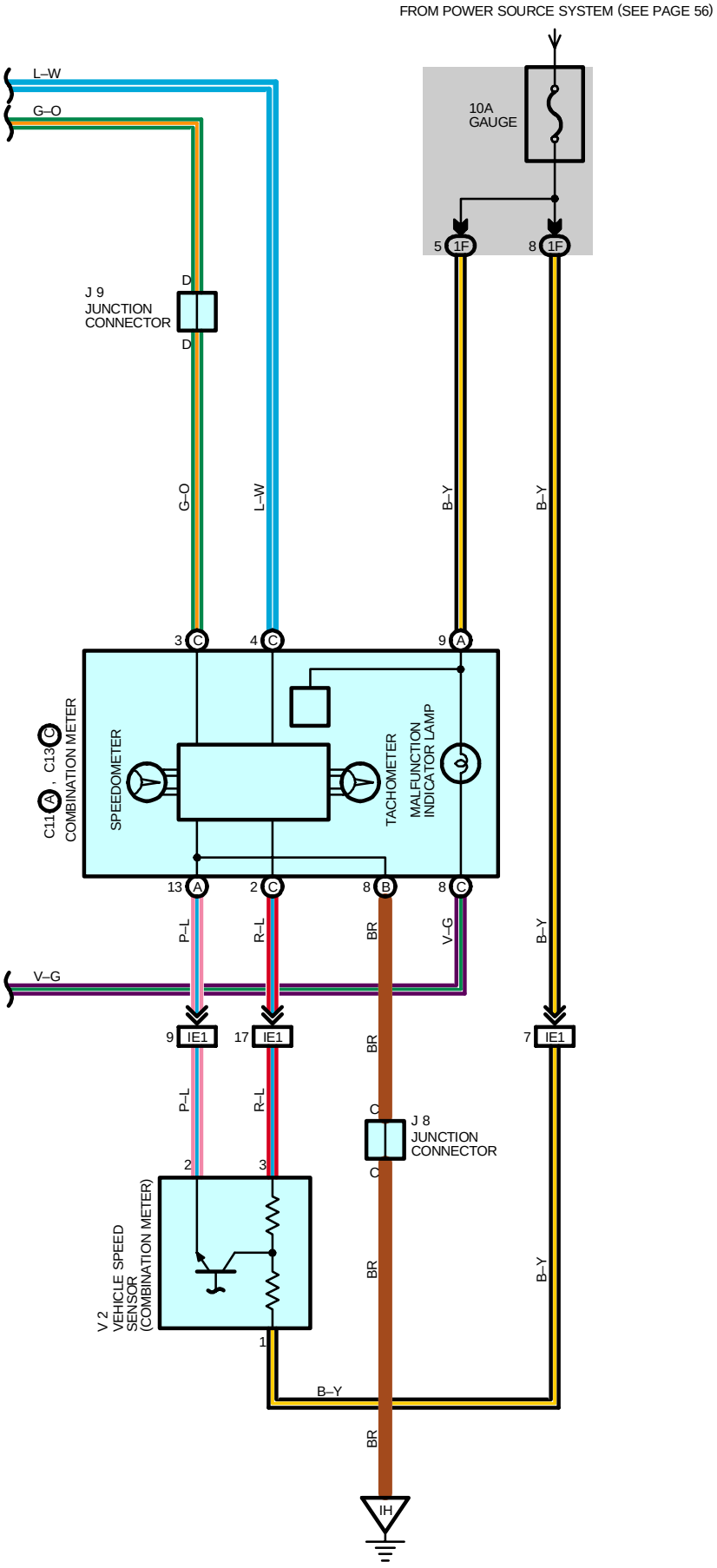
FROM POWER SOURCE SYSTEM (SEE PAGE 56)
L–W
G–O
10A
GAUGE
5 1F
8 1F
J 9
JUNCTION
CONNECTOR
D
D
G–O
L–W
B–Y
B–Y
3 C
4 C
9 A
C11 A , C13 C
COMBINATION METER
SPEEDOMETER
TACHOMETER
MALFUNCTION
INDICATOR LAMP
13 A
2 C
8 B
8 C
P–L
R–L
BR
V–G
B–Y
V–G
9 IE1
17 IE1
7 IE1
P–L
R–L
BR
C
J 8
JUNCTION
CONNECTOR
C
2
3
V 2
VEHICLE SPEED
SENSOR
(COMBINATION METER)
1
B–Y
BR
B–Y
IH

SYSTEM OUTLINE

The engine control system utilizes a microcomputer and maintains overall control of the engine, transmission etc. An outline of the engine control is given here.

1. INPUT SIGNALS

(1) Engine coolant temp. signal circuit

The engine coolant temp. sensor detects the engine coolant temp. and has a built–in thermistor with a resistance which varies according to the engine coolant temp. The engine coolant temp. is input into TERMINAL THW of the engine control module as a control signal.

(2) Intake air temp. signal circuit

The intake air temp. sensor is installed in the mass air flow meter and detects the intake air temp., which is input as a control signal to TERMINAL THA of the engine control module.

(3) Oxygen sensor signal circuit

The oxygen density in the exhaust emission is detected and is input as a control signal from the heated oxygen sensors to TERMINALS OX1A, OX2A, OX1B, OX2B of the engine control module.

(4) RPM signal circuit

The camshaft position is detected by the camshaft position sensor and is input into TERMINAL G2 of the engine control module as a control signal. Also, the engine RPM is detected by the crankshaft position sensor and the signal is input into TERMINAL NE+ of the engine control module.

(5) Throttle position sensor signal circuit

The throttle position sensor detects the throttle valve opening angle as a control signal, which is input into TERMINALS VTA1, VTA2 of the engine control module.

(6) Vehicle speed circuit

The vehicle speed sensor (Combination meter) detects the vehicle speed, and the signal is input into TERMINAL SPD of the engine control module via the combination meter.

(7) Battery signal circuit

Voltage is constantly applied to TERMINAL BATT of the engine control module. When the ignition SW is turned on, the voltage for engine control module start up power supply is applied through the EFI relay, to TERMINALS +B, +B2 of the engine control module. The current from the IGN fuse flows to TERMINAL IGSW of the engine control module, and voltage is constantly applied to TERMINAL +BM.

(8) Intake air volume signal circuit

The intake air volume is detected by the mass air flow meter, and is input as a control signal to TERMINAL VG of the engine control module.

(9) Stop light SW signal circuit

The stop light SW is used to detect whether the vehicle is braking or not, and the signal is input into TERMINAL STP of the engine control module as a control signal.

(10) Starter signal circuit

To confirm whether the engine is cranking, the voltage applied to the starter motor when the engine is cranking is detected, and is input into TERMINAL STA of the engine control module as a control signal.

(11) Engine knock signal circuit

Engine knocking is detected by the knock sensors, and is input into TERMINALS KNK1, KNK2 of the engine control module as a control signal.

2. CONTROL SYSTEM

* SFI system
  The SFI system monitors the engine condition through the signals input from each sensors to the engine control module. The control signal is sent to the engine control module TERMINALS #1, #2, #3, #4, #5, #6, #7, #8 to operate the injector (Fuel injection). The SFI system controls the fuel injection by the engine control module in response to the driving conditions.
* ESA system
  The ESA system monitors the engine condition through the signals input from each sensors to the engine control module. The best ignition timing is decided according to this data and the data memorized in the engine control module. The control signal is output to TERMINALS IGT1, IGT2, IGT3, IGT4, IGT5, IGT6, IGT7, IGT8, and these signals control the igniter to provide the best ignition timing.
* Heated oxygen sensor heater control system
  The heated oxygen sensor heater control system turns the heater on when the intake air volume is low (Temp. of exhaust emission is low), and warms up the heated oxygen sensors to improve their detection performance. The engine control module evaluates the signals from each sensors, and outputs current to TERMINALS HT1A, HT2A, HT1B, HT2B to control the heater.
* Fuel pump control system
  The engine control module supplies current to TERMINAL FPR, and controls the operation speed of the fuel pump with the F/PMP relay.
* ETCS–i
  The ETCS–i controls the engine output at its optimal level in accordance with the opening of the accelerator pedal, under all driving conditions.

3. DIAGNOSIS SYSTEM

When there is a malfunction in the engine control module signal system, the malfunctioning system is recorded in the memory. The malfunctioning system can be found by reading the code displayed on the malfunction indicator lamp.

4. FAIL−SAFE SYSTEM

When a malfunction has occurred in any system, there is a possibility of causing engine trouble due to continued control based on that system. In that case, the fail–safe system either controls the system using the data (Standard values) recorded in the engine control module memory, or else stops the engine.

SERVICE HINTS

EFI RELAY

5–3 : Closed with ignition SW at **ON** or **ST** position

C/OPN RELAY

5–3 : Closed with starter cranking or engine cranking

E2 ENGINE COOLANT TEMP. SENSOR

1–2 : Approx. **16.2** kΩ (**–20**˚C, **–4**˚F)
: Approx. **2.45** kΩ (**20**˚C, **68**˚F)
: Approx. **0.32** kΩ (**80**˚C, **176**˚F)

E3 (A), E4 (B), E5 (C), E6 (D), E7 (E) ENGINE CONTROL MODULE

BATT–E1 : Always **9.0**–**14.0** volts
+BM–E1 : Always **9.0**–**14.0** volts
IGSW–E1 : **9.0**–**14.0** volts with ignition SW at **ON** or **ST** position
+B, +B2–E1: **9.0**–**14.0** volts with ignition SW at **ON** or **ST** position
VC–E1 : **4.5**–**5.5** volts with ignition SW at **ON** or **ST** position
VTA2–E1 : **2.0**–**2.9** volts with ignition SW on and throttle valve fully closed
: **4.7**–**5.1** volts with ignition SW on and throttle valve fully open
VTA1–E1 : **0.4**–**1.0** volts with ignition SW on and throttle valve fully closed
: **3.2**–**4.8** volts with ignition SW on and throttle valve fully open
VPA–E1 : **0.3**–**0.9** volts with ignition SW on and throttle valve fully closed
: **3.2**–**4.8** volts with ignition SW on and throttle valve fully open
VPA2–E1 : **1.8**–**2.7** volts with ignition SW on and throttle valve fully closed
: **4.7**–**5.1** volts with ignition SW on and throttle valve fully open
THA–E1 : **0.5**–**3.4** volts with idling, intake air temp. **0**˚C (**32**˚F) –**80**˚C (**176**˚F)
THW–E1 : **0.2**–**1.0** volts with idling, engine coolant temp. **60**˚C (**140**˚F) –**120**˚C (**248**˚F)
STA–E1 : **6.0** volts or more with engine cranking
W–E1 : **9.0**–**14.0** volts with idling and malfunction indicator lamp off
SPD–E1 : Pulse generation with vehicle moving
STP–E1 : **7.5**–**14.0** volts with brake pedal depressed

○ : PARTS LOCATION

Code	See Page	Code	See Page	Code	See Page
A1	30 (2UZ–FE)	H5	30 (2UZ–FE)	J5	35
A3	30 (2UZ–FE)	H6	30 (2UZ–FE)	J8	35
A13	34	I3	31 (2UZ–FE)	J9	35
A20	34	I4	31 (2UZ–FE)	J10	35
A22	34	I5	31 (2UZ–FE)	J14 A	36 (Access Cab)
C1	30 (2UZ–FE)	I6	31 (2UZ–FE)		37 (Standard Cab)
C2	30 (2UZ–FE)	I7	31 (2UZ–FE)	J15 B	36 (Access Cab)
C5	34	I8	31 (2UZ–FE)		37 (Standard Cab)
C11 A	34	I9	31 (2UZ–FE)	J18	31 (2UZ–FE)
C13 C	34	I10	31 (2UZ–FE)	J19	35
D6	34	I14	31 (2UZ–FE)	J21 A	35
D10	34	I15	31 (2UZ–FE)	J22 B	35
E2	30 (2UZ–FE)	I16	31 (2UZ–FE)	K1	31 (2UZ–FE)
E3 A	34	I17	31 (2UZ–FE)	K2	31 (2UZ–FE)
E4 B	34	I18	31 (2UZ–FE)	M1	31 (2UZ–FE)
E5 C	34	I19	31 (2UZ–FE)	S4	35
E6 D	34	I20	31 (2UZ–FE)	T2	31 (2UZ–FE)
E7 E	34	I21	31 (2UZ–FE)	V1	36 (Access Cab)
F5	30 (2UZ–FE)	I23	35		37 (Standard Cab)
F10	36 (Access Cab)	I24	35	V2	31 (2UZ–FE)
	37 (Standard Cab)	J1	31 (2UZ–FE)	V4	31 (2UZ–FE)
H3	30 (2UZ–FE)	J2	31 (2UZ–FE)	V9	36 (Access Cab)
H4	30 (2UZ–FE)	J3	35		37 (Standard Cab)

: RELAY BLOCKS

Code	See Page	Relay Blocks (Relay Block Location)
2	21	Engine Room R/B (Engine Compartment Left)

: JUNCTION BLOCK AND WIRE HARNESS CONNECTOR

Code	See Page	Junction Block and Wire Harness (Connector Location)
1B	22 (*2)	Cowl Wire and Driver Side J/B (Lower Finish Panel)
	26 (*1)	
1D	22 (*2)	
	26 (*1)	
1F	22 (*2)	
	26 (*1)	
1G	22 (*2)	
	26 (*1)	
1I	22 (*2)	Engine Room Main Wire and Driver Side J/B (Lower Finish Panel)
	26 (*1)	
1J	22 (*2)	Cowl Wire and Driver Side J/B (Lower Finish Panel)
	26 (*1)	
1K	22 (*2)	Engine Room Main Wire and Driver Side J/B (Lower Finish Panel)
	26 (*1)	

: CONNECTOR JOINING WIRE HARNESS AND WIRE HARNESS

Code	See Page	Joining Wire Harness and Wire Harness (Connector Location)
EA1	40 (2UZ–FE)	Cowl Wire and Engine Room Main Wire (Right Fender)
EC2	40 (2UZ–FE)	Engine No.2 Wire and Engine Wire (Near the Starter)
IA4	44	Engine Room Main Wire and Cowl Wire (Left Kick Panel)
IA5		
IE1	46	Engine Wire and Cowl Wire (Right Side of Instrument Panel)
II1	46	Cowl Wire and Cowl Wire (Instrument Panel Reinforcement RH)
BB1	48 (Access Cab)	Frame Wire and Cowl Wire (Under the Driver's Seat)
	50 (Standard Cab)	

: GROUND POINTS

Code	See Page	Ground Points Location
EA	40 (2UZ–FE)	Front Left Fender
EB	40 (2UZ–FE)	Rear Bank of Right Cylinder Head
EC	40 (2UZ–FE)	Rear Bank of Left Cylinder Head
IF	44	Left Kick Panel
IH	44	Right Kick Panel

: SPLICE POINTS

Code	See Page	Wire Harness with Splice Points	Code	See Page	Wire Harness with Splice Points
E4	40 (2UZ–FE)	Engine No.2 Wire	E8	40 (2UZ–FE)	Engine Wire
E6	40 (2UZ–FE)	Engine Wire	I3	46	
E7			I5	46	Cowl Wire

* 1 : w/ Daytime Running Light * 2 : w/o Daytime Running Light * 3 : Bench Seat * 4 : Separate Seat, Captain Seat (w/o Power Seat)

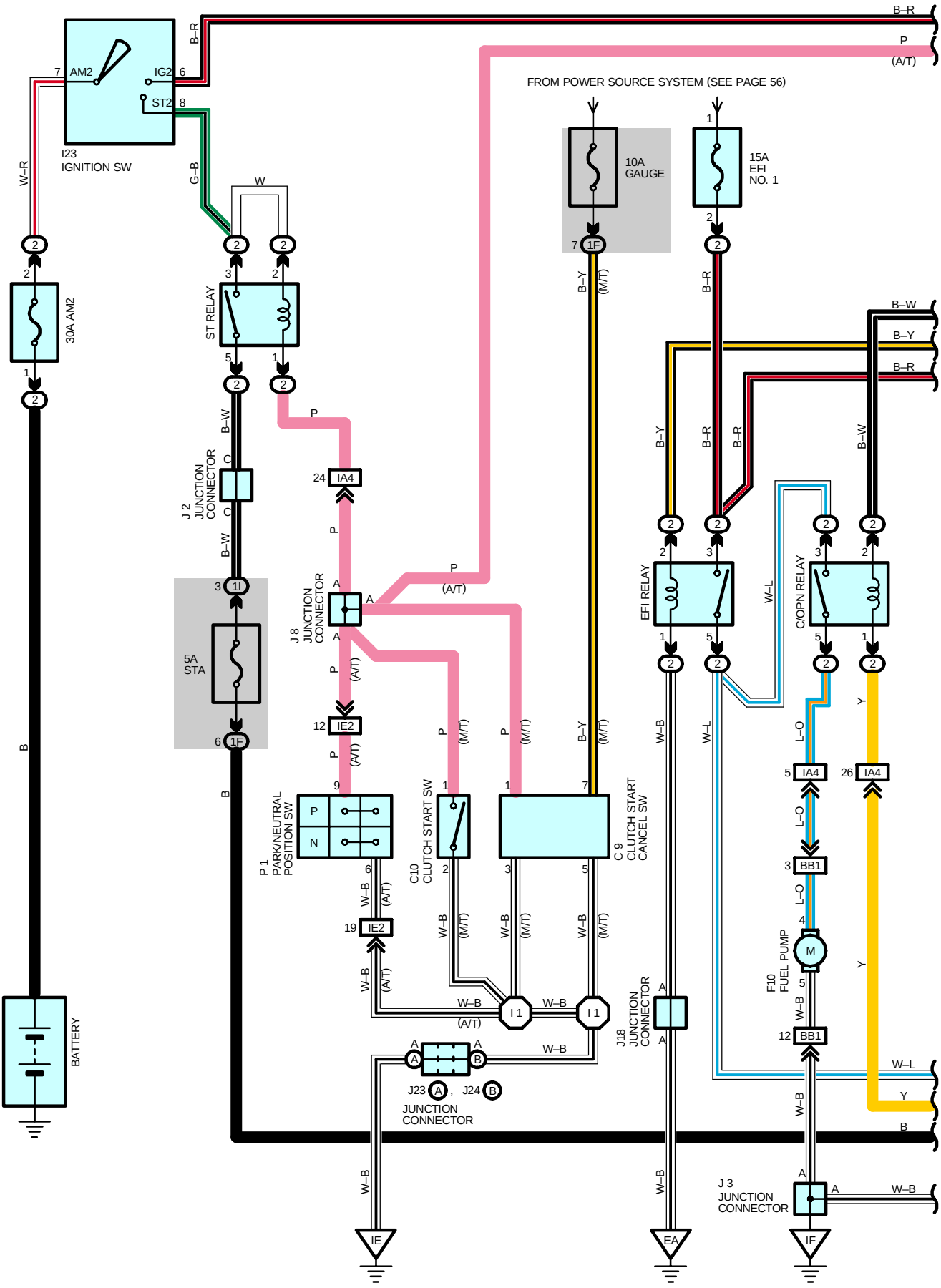
FROM POWER SOURCE SYSTEM (SEE PAGE 56)
I23
IGNITION SW
AM2
IG2
ST2
10A
GAUGE
15A
EFI
NO. 1
30A AM2
ST RELAY
J 2
JUNCTION
CONNECTOR
5A
STA
J 8
JUNCTION
CONNECTOR
EFI RELAY
C/OPN RELAY
P 1
PARK/NEUTRAL
POSITION SW
C10
CLUTCH START SW
C 9
CLUTCH START
CANCEL SW
J18
JUNCTION
CONNECTOR
F10
FUEL PUMP
J23
J24
JUNCTION
CONNECTOR
J 3
JUNCTION
CONNECTOR
BATTERY
IE
EA
IF

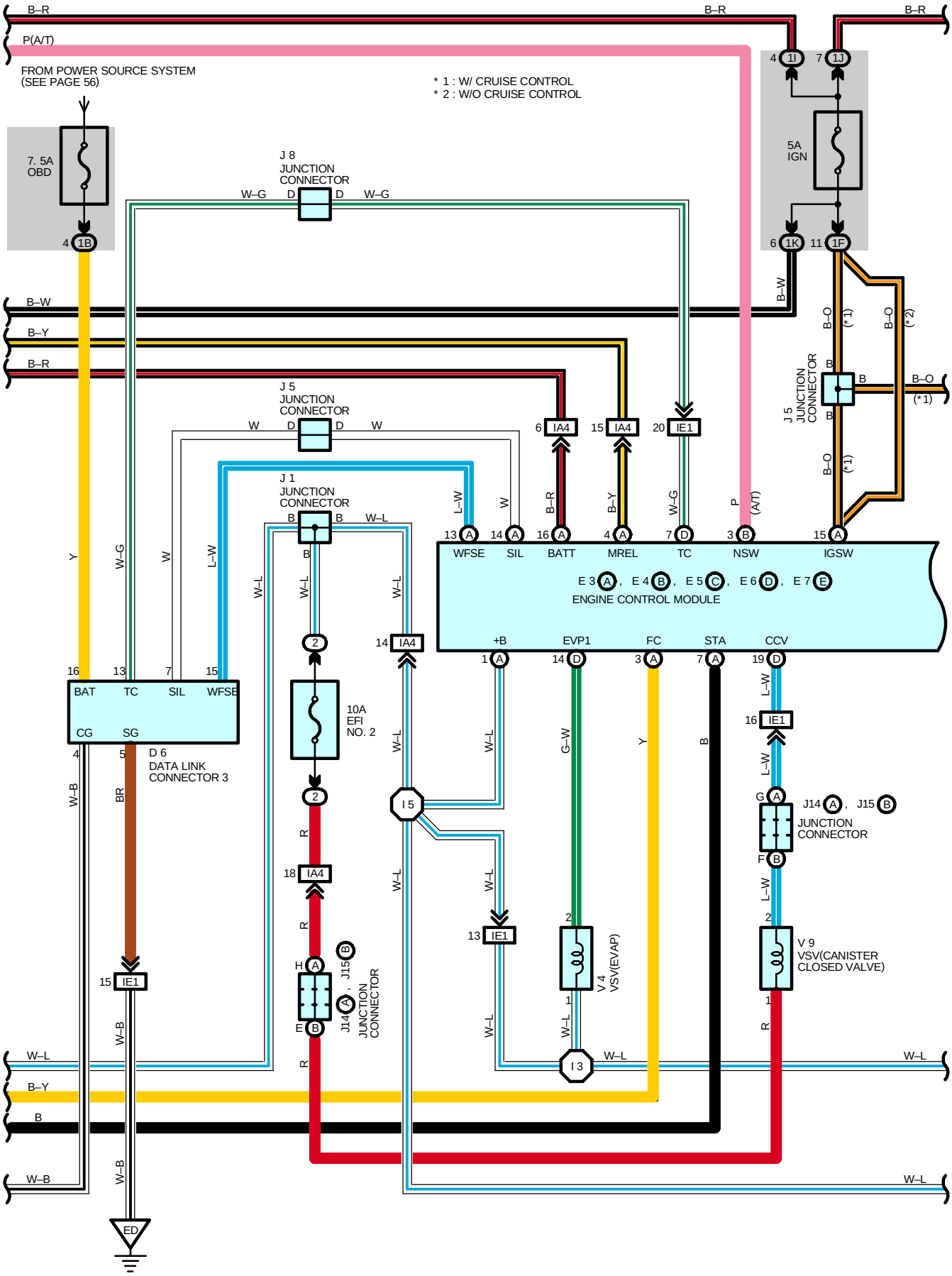
B–R
P(A/T)
FROM POWER SOURCE SYSTEM
(SEE PAGE 56)
* 1 : W/ CRUISE CONTROL
* 2 : W/O CRUISE CONTROL
7. 5A
OBD
J 8
JUNCTION
CONNECTOR
W–G
5A
IGN
B–W
B–Y
J 5
JUNCTION
CONNECTOR
J 1
JUNCTION
CONNECTOR
B–O
(*1)
(*2)
WFSE
SIL
BATT
MREL
TC
NSW
IGSW
E 3 , E 4 , E 5 , E 6 , E 7
ENGINE CONTROL MODULE
+B
EVP1
FC
STA
CCV
BAT
TC
SIL
WFSE
CG
SG
D 6
DATA LINK
CONNECTOR 3
10A
EFI
NO. 2
I 5
I 3
V 4
VSV(EVAP)
V 9
VSV(CANISTER
CLOSED VALVE)
J14 , J15
JUNCTION
CONNECTOR
W–L
B–Y
B
W–B
ED

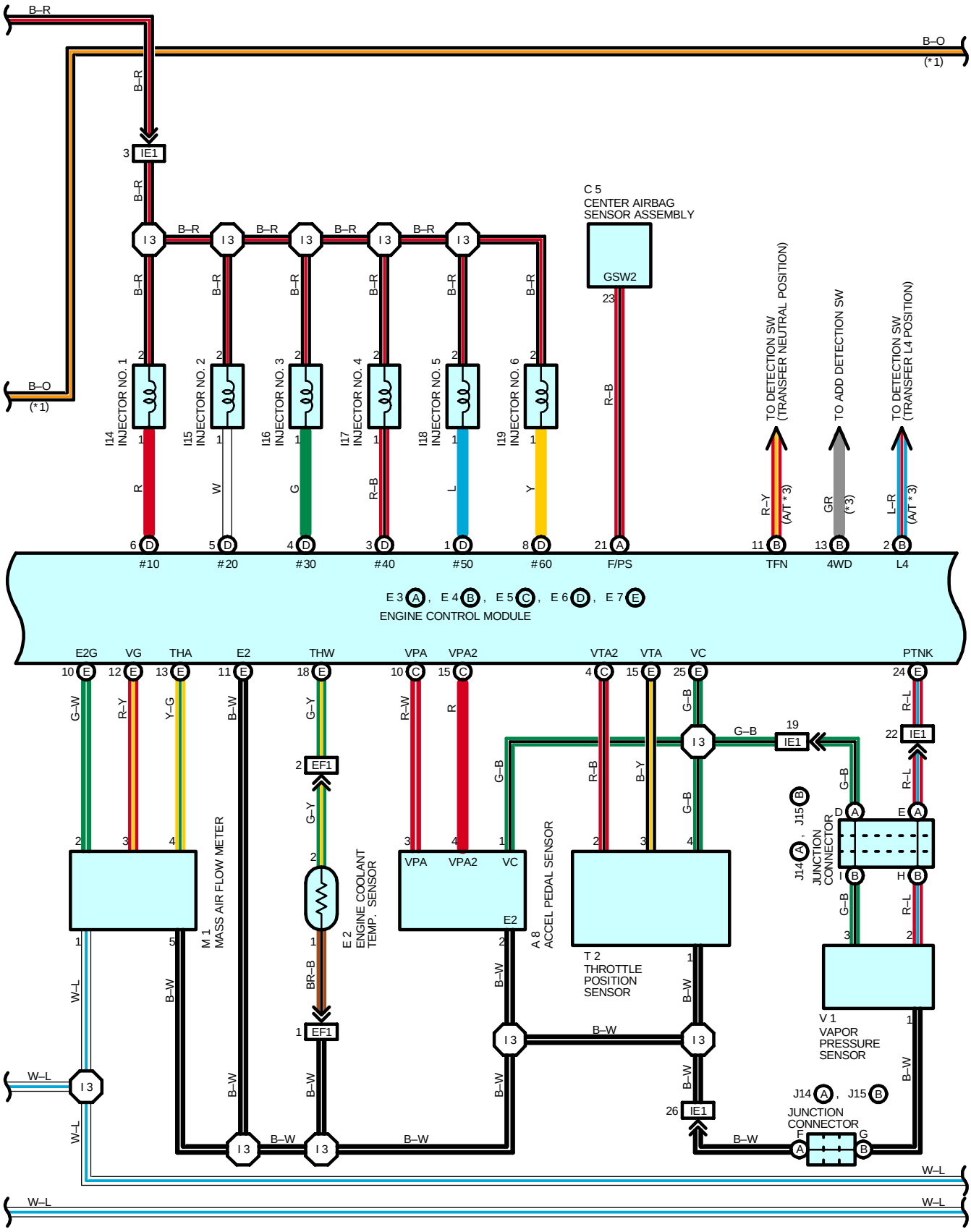
B–R
B–O
(*1)
IE1
I3
I14 INJECTOR NO. 1
I15 INJECTOR NO. 2
I16 INJECTOR NO. 3
I17 INJECTOR NO. 4
I18 INJECTOR NO. 5
I19 INJECTOR NO. 6
#10
#20
#30
#40
#50
#60
C 5 CENTER AIRBAG SENSOR ASSEMBLY
GSW2
F/PS
TO DETECTION SW (TRANSFER NEUTRAL POSITION)
TO ADD DETECTION SW
TO DETECTION SW (TRANSFER L4 POSITION)
TFN
4WD
L4
R–Y (A/T *3)
GR (*3)
L–R (A/T *3)
E3 A , E4 B , E5 C , E6 D , E7 E
ENGINE CONTROL MODULE
E2G
VG
THA
E2
THW
VPA
VPA2
VTA2
VTA
VC
PTNK
M 1 MASS AIR FLOW METER
E 2 ENGINE COOLANT TEMP. SENSOR
A 8 ACCEL PEDAL SENSOR
T 2 THROTTLE POSITION SENSOR
V 1 VAPOR PRESSURE SENSOR
J14 , J15 JUNCTION CONNECTOR
EF1
W–L
B–W
G–B
G–Y
R–Y
Y–G
G–W
R–W
R–B
B–Y
R–L
BR–B

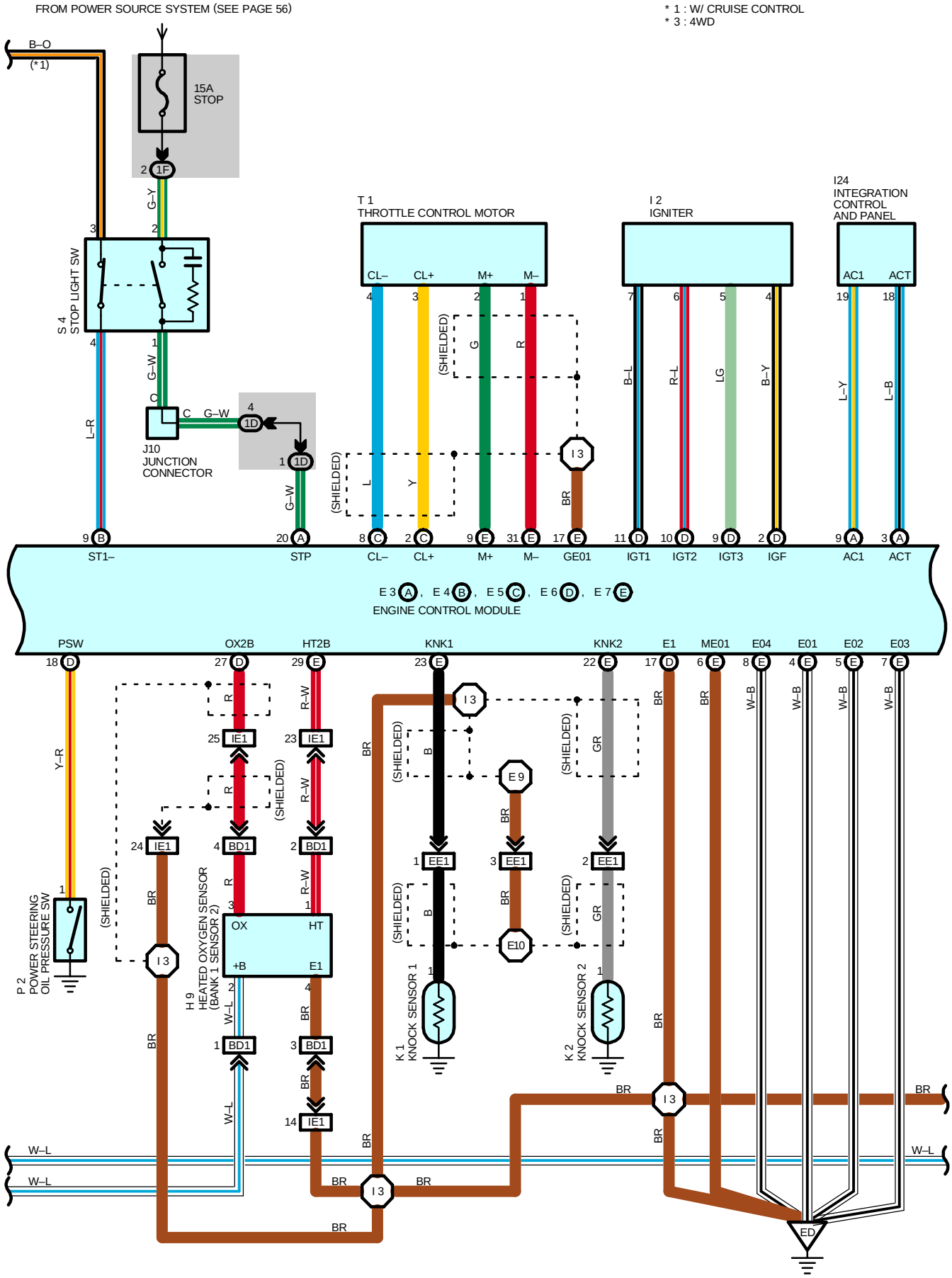
FROM POWER SOURCE SYSTEM (SEE PAGE 56)
* 1 : W/ CRUISE CONTROL
* 3 : 4WD
B–O
(*1)
15A
STOP
2 1F
G–Y
3
2
S 4
STOP LIGHT SW
4
1
G–W
C
L–R
C G–W
4
1D
J10
JUNCTION
CONNECTOR
1
1D
G–W
T 1
THROTTLE CONTROL MOTOR
CL– CL+ M+ M–
4 3 2 1
(SHIELDED)
G
R
L
Y
I 3
BR
I 2
IGNITER
7 6 5 4
B–L
R–L
LG
B–Y
I24
INTEGRATION
CONTROL
AND PANEL
AC1 ACT
19 18
L–Y
L–B
9 B
ST1–
20 A
STP
8 C
CL–
2 C
CL+
9 E
M+
31 E
M–
17 E
GE01
11 D
IGT1
10 D
IGT2
9 D
IGT3
2 D
IGF
9 A
AC1
3 A
ACT
E 3 A , E 4 B , E 5 C , E 6 D , E 7 E
ENGINE CONTROL MODULE
PSW
OX2B
HT2B
KNK1
KNK2
E1
ME01
E04
E01
E02
E03
18 D
27 D
29 E
23 E
22 E
17 D
6 E
8 E
4 E
5 E
7 E
Y–R
R
R–W
25 IE1
23 IE1
(SHIELDED)
24 IE1
4 BD1
2 BD1
BR
P 2
POWER STEERING
OIL PRESSURE SW
1
H 9
HEATED OXYGEN SENSOR
(BANK 1 SENSOR 2)
OX HT
+B E1
3
2
1
4
W–L
1 BD1
3 BD1
14 IE1
B
E 9
E10
1 EE1
3 EE1
2 EE1
K 1
KNOCK SENSOR 1
K 2
KNOCK SENSOR 2
GR
W–B
ED
W–L

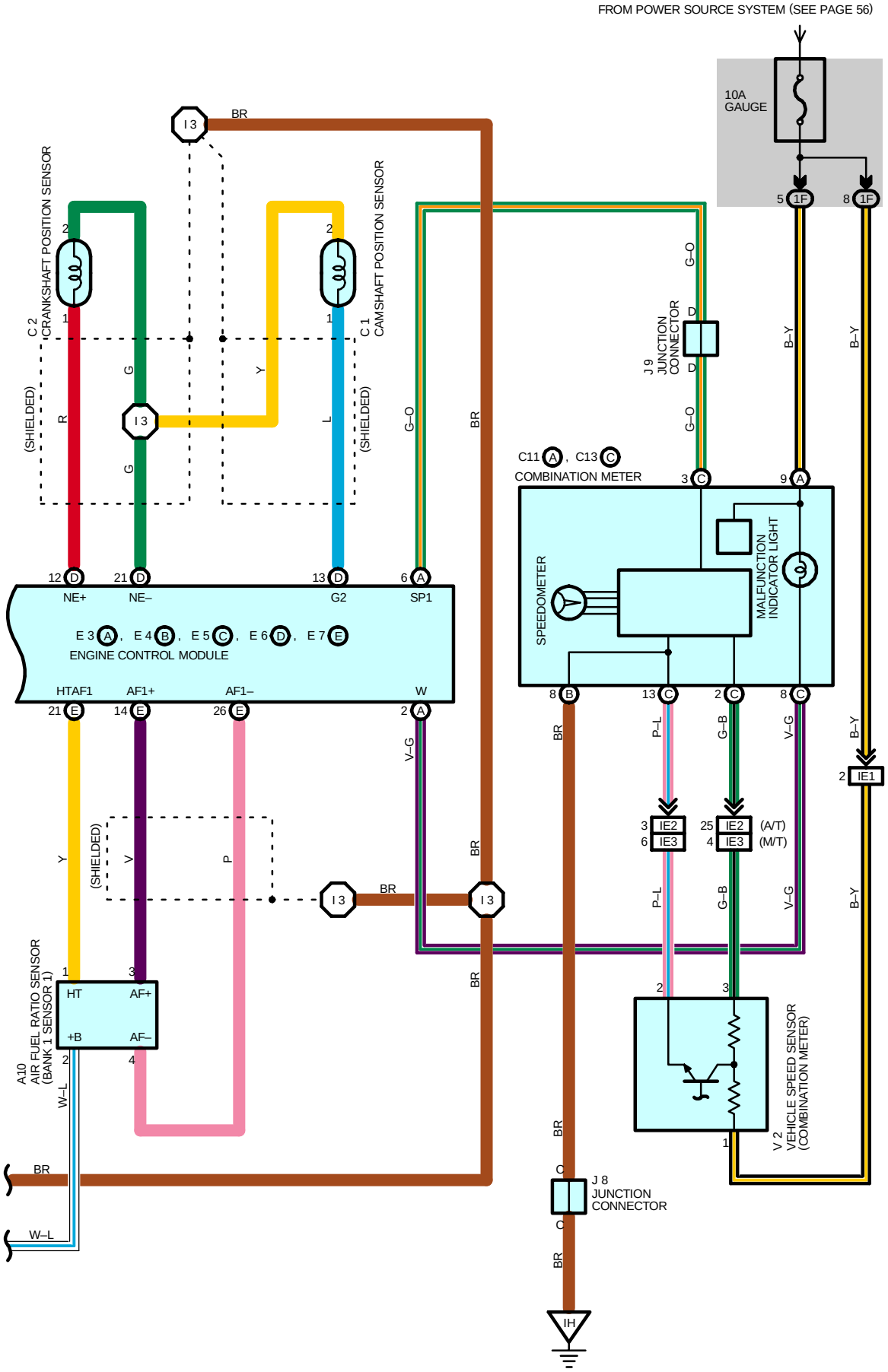
FROM POWER SOURCE SYSTEM (SEE PAGE 56)
10A GAUGE
5 1F
8 1F
I 3
BR
C 2 CRANKSHAFT POSITION SENSOR
C 1 CAMSHAFT POSITION SENSOR
(SHIELDED)
G
Y
R
L
G–O
B–Y
J 9 JUNCTION CONNECTOR
C11 A , C13 C
COMBINATION METER
SPEEDOMETER
MALFUNCTION INDICATOR LIGHT
12 D NE+
21 D NE–
13 D G2
6 A SP1
E 3 A , E 4 B , E 5 C , E 6 D , E 7 E
ENGINE CONTROL MODULE
HTAF1
AF1+
AF1–
W
21 E
14 E
26 E
2 A
V–G
P–L
G–B
IE1
IE2
IE3
(A/T)
(M/T)
A10 AIR FUEL RATIO SENSOR (BANK 1 SENSOR 1)
HT
AF+
+B
AF–
W–L
V 2 VEHICLE SPEED SENSOR (COMBINATION METER)
J 8 JUNCTION CONNECTOR
IH

SYSTEM OUTLINE

The engine control system utilizes a microcomputer and maintains overall control of the engine, transmission etc. An outline of the engine control is given here.

1. INPUT SIGNALS

(1) Engine coolant temp. signal circuit

The engine coolant temp. sensor detects the engine coolant temp. and has a built–in thermistor with a resistance which varies according to the engine coolant temp. The engine coolant temp. is input into TERMINAL THW of the engine control module as a control signal.

(2) Intake air temp. signal circuit

The intake air temp. sensor is installed in the mass air flow meter and detects the intake air temp., which is input as a control signal to TERMINAL THA of the engine control module.

(3) Oxygen sensor signal circuit

The oxygen density in the exhaust emission is detected and is input as a control signal from the heated oxygen sensors to TERMINAL OX2B of the engine control module.

(4) RPM signal circuit

The camshaft position is detected by the camshaft position sensor and is input into TERMINAL G2 of the engine control module as a control signal. Also, the engine RPM is detected by the crankshaft position sensor and the signal is input into TERMINAL NE+ of the engine control module.

(5) Throttle position sensor signal circuit

The throttle position sensor detects the throttle valve opening angle as a control signal, which is input into TERMINAL VTA of the engine control module.

(6) Vehicle speed circuit

The vehicle speed sensor (Combination meter) detects the vehicle speed, and the signal is input into TERMINAL SP1 of the engine control module via the combination meter.

(7) Battery signal circuit

Voltage is constantly applied to TERMINAL BATT of the engine control module. When the ignition SW is turned on, the voltage for engine control module start up power supply is applied through the EFI relay, to TERMINAL +B of the engine control module.

(8) Intake air volume signal circuit

The intake air volume is detected by the mass air flow meter, and is input as a control signal to TERMINAL VG of the engine control module.

(9) Stop light SW signal circuit

The stop light SW is used to detect whether the vehicle is braking or not, and the signal is input into TERMINAL STP of the engine control module as a control signal.

(10) Starter signal circuit

To confirm whether the engine is cranking, the voltage applied to the starter motor when the engine is cranking is detected, and is input into TERMINAL STA of the engine control module as a control signal.

(11) Engine knock signal circuit

Engine knocking is detected by the knock sensors, and is input into TERMINALS KNK1, KNK2 of the engine control module as a control signal.

(12) A/C SW signal system

The operating voltage of the A/C magnetic clutch is detected and input in the form of a control signal to TERMINAL AC1 of the engine control module.

(13) 4WD signal system

Whether or not the vehicle is operating in 4WD mode is determined, and a control signal is input to TERMINAL 4WD of the engine control module.

(14) Air fuel ratio signal system

The air fuel ratio is detected and input as a control signal into TERMINAL AF1+ of the engine control module.

2. CONTROL SYSTEM

∗ SFI system
The SFI system monitors the engine condition through the signals input from each sensors to the engine control module. The control signal is sent to the engine control module TERMINALS #10, #20, #30, #40, #50, #60 to operate the injector (Fuel injection). The SFI system controls the fuel injection by the engine control module in response to the driving conditions.

∗ ESA system
The ESA system monitors the engine condition through the signals input from each sensors to the engine control module. The best ignition timing is decided according to this data and the data memorized in the engine control module. The control signal is output to TERMINALS IGT1, IGT2, IGT3 and these signals control the igniter to provide the best ignition timing.

∗ Heated oxygen sensor heater control system
The heated oxygen sensor heater control system turns the heater on when the intake air volume is low (Temp. of exhaust emission is low), and warms up the heated oxygen sensors to improve their detection performance. The engine control module evaluates the signals from each sensors, and outputs current to TERMINAL HT2B to control the heater.

3. DIAGNOSIS SYSTEM

When there is a malfunction in the engine control module signal system, the malfunctioning system is recorded in the memory. The malfunctioning system can be found by reading the code displayed on the malfunction indicator lamp.

4. FAIL–SAFE SYSTEM

When a malfunction has occurred in any system, there is a possibility of causing engine trouble due to continued control based on that system. In that case, the fail–safe system either controls the system using the data (Standard values) recorded in the engine control module memory, or else stops the engine.

SERVICE HINTS

EFI RELAY

5–3 : Closed with ignition SW at **ON** or **ST** position

C/OPN RELAY

5–3 : Closed with starter cranking or engine cranking

T2 THROTTLE POSITION SENSOR

2–1 : Approx. **2.5**–**6.0** kΩ

E2 ENGINE COOLANT TEMP. SENSOR

1–2 : Approx. **15.0** kΩ (**–20**˚C, **–4**˚F)
Approx. **2.45** kΩ (**20**˚C, **68**˚F)
Approx. **0.32** kΩ (**80**˚C, **176**˚F)

E3 (A), E4 (B), E5 (C), E6 (D), E7 (E) ENGINE CONTROL MODULE

BATT–E1 : Always **9.0**–**14.0** volts
+B–E1 : **9.0**–**14.0** volts with ignition SW at **ON** or **ST** position
VC–E1 : **4.5**–**5.5** volts
VTA–E1 : **0.3**–**1.0** volts with ignition SW on and throttle valve fully closed
: **3.2**–**4.9** volts with ignition SW on and throttle valve fully open
THA–E1 : **0.5**–**3.4** volts with idling, intake air temp. **0**˚C (**32**˚F) –**80**˚C (**176**˚F)
THW–E1 : **0.2**–**1.0** volts with idling, engine coolant temp. **60**˚C (**140**˚F) –**120**˚C (**248**˚F)
STA–E1 : **6.0** volts or more with engine cranking
W–E1 : **9.0**–**14.0** volts with idling and malfunction indicator lamp off
SP1–E1 : Pulse generation with vehicle moving
STP–E1 : **7.5**–**14.0** volts with brake pedal depressed

: PARTS LOCATION

Code	See Page	Code	See Page	Code	See Page
A8	32 (5VZ–FE)	H9	37 (Standard Cab)	J15 B	36 (Access Cab)
A10	32 (5VZ–FE)	I2	33 (5VZ–FE)		37 (Standard Cab)
C1	32 (5VZ–FE)	I14	33 (5VZ–FE)	J18	33 (5VZ–FE)
C2	32 (5VZ–FE)	I15	33 (5VZ–FE)	J23 A	35
C5	34	I16	33 (5VZ–FE)	J24 B	35
C9	34	I17	33 (5VZ–FE)	K1	33 (5VZ–FE)
C10	34	I18	33 (5VZ–FE)	K2	33 (5VZ–FE)
C11 A	34	I19	33 (5VZ–FE)	M1	33 (5VZ–FE)
C13 C	34	I23	35	P1	33 (5VZ–FE)
D6	34	I24	35	P2	33 (5VZ–FE)
E2	32 (5VZ–FE)	J1	33 (5VZ–FE)	S4	35
E3 A	34	J2	33 (5VZ–FE)	T1	33 (5VZ–FE)
E4 B	34	J3	35	T2	33 (5VZ–FE)
E5 C	34	J5	35	V1	36 (Access Cab)
E6 D	34	J8	35		37 (Standard Cab)
E7 E	34	J9	35	V2	33 (5VZ–FE)
F10	36 (Access Cab)	J10	35	V4	33 (5VZ–FE)
	37 (Standard Cab)	J14 A	36 (Access Cab)	V9	36 (Access Cab)
H9	36 (Access Cab)		37 (Standard Cab)		37 (Standard Cab)

: RELAY BLOCKS

Code	See Page	Relay Blocks (Relay Block Location)
2	21	Engine Room R/B (Engine Compartment Left)

: JUNCTION BLOCK AND WIRE HARNESS CONNECTOR

Code	See Page	Junction Block and Wire Harness (Connector Location)
1B	22 (*2)	Cowl Wire and Driver Side J/B (Lower Finish Panel)
	26 (*1)	
1D	22 (*2)	
	26 (*1)	
1F	22 (*2)	
	26 (*1)	
1I	22 (*2)	Engine Room Main Wire and Driver Side J/B (Lower Finish Panel)
	26 (*1)	
1J	22 (*2)	Cowl Wire and Driver Side J/B (Lower Finish Panel)
	26 (*1)	
1K	22 (*2)	Engine Room Main Wire and Driver Side J/B (Lower Finish Panel)
	26 (*1)	

: CONNECTOR JOINING WIRE HARNESS AND WIRE HARNESS

Code	See Page	Joining Wire Harness and Wire Harness (Connector Location)
EE1	42 (5VZ–FE)	Sensor Wire and Engine Wire (Over the Cylinder Head)
EF1	42 (5VZ–FE)	Engine Wire and Sensor Wire (Over the Cylinder Head)
IA4	44	Engine Room Main Wire and Cowl Wire (Left Kick Panel)
IE1	46	Engine Wire and Cowl Wire (Right Side of Instrument Panel)
IE2		
IE3		
BB1	48 (Access Cab)	Frame Wire and Cowl Wire (Under the Driver's Seat)
	50 (Standard Cab)	
BD1	48 (Access Cab)	Frame Wire and Cowl Wire (Under the Front Passenger's Seat)
	50 (Standard Cab)	

* 1 : w/ Daytime Running Light * 2 : w/o Daytime Running Light * 3 : Bench Seat * 4 : Separate Seat, Captain Seat (w/o Power Seat)

 **: GROUND POINTS**

Code	See Page	Ground Points Location
EA	42 (5VZ–FE)	Front Left Fender
ED	42 (5VZ–FE)	Intake Manifold Left
IE	44	Left Kick Panel
IF		
IH	44	Right Kick Panel

 **: SPLICE POINTS**

Code	See Page	Wire Harness with Splice Points	Code	See Page	Wire Harness with Splice Points
E9	42 (5VZ–FE)	Engine Wire	I3	46	Engine Wire
E10	42 (5VZ–FE)	Sensor Wire	I5	46	Cowl Wire
I1	46	Cowl Wire			

HEADLIGHT (w/ DAYTIME RUNNING LIGHT)

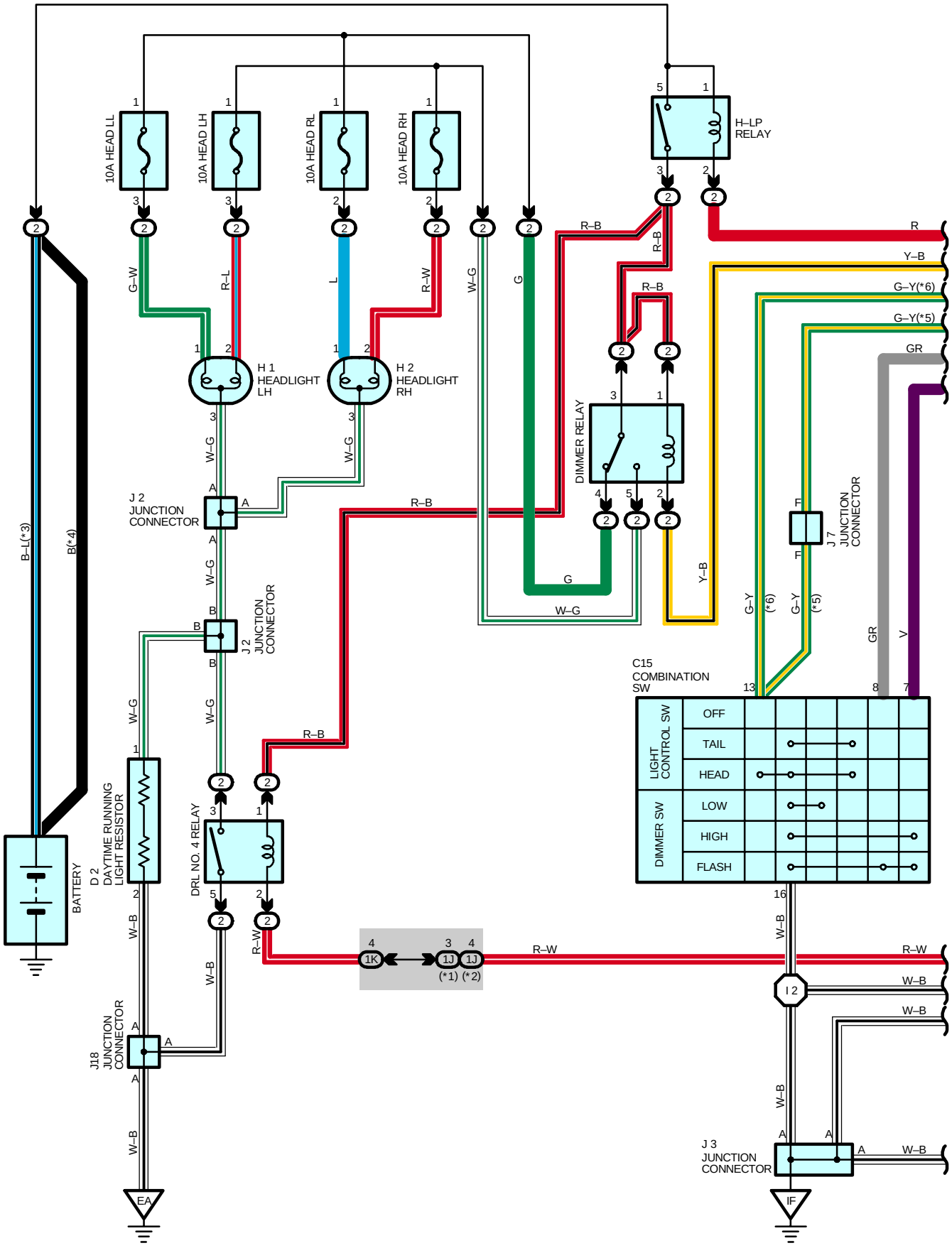

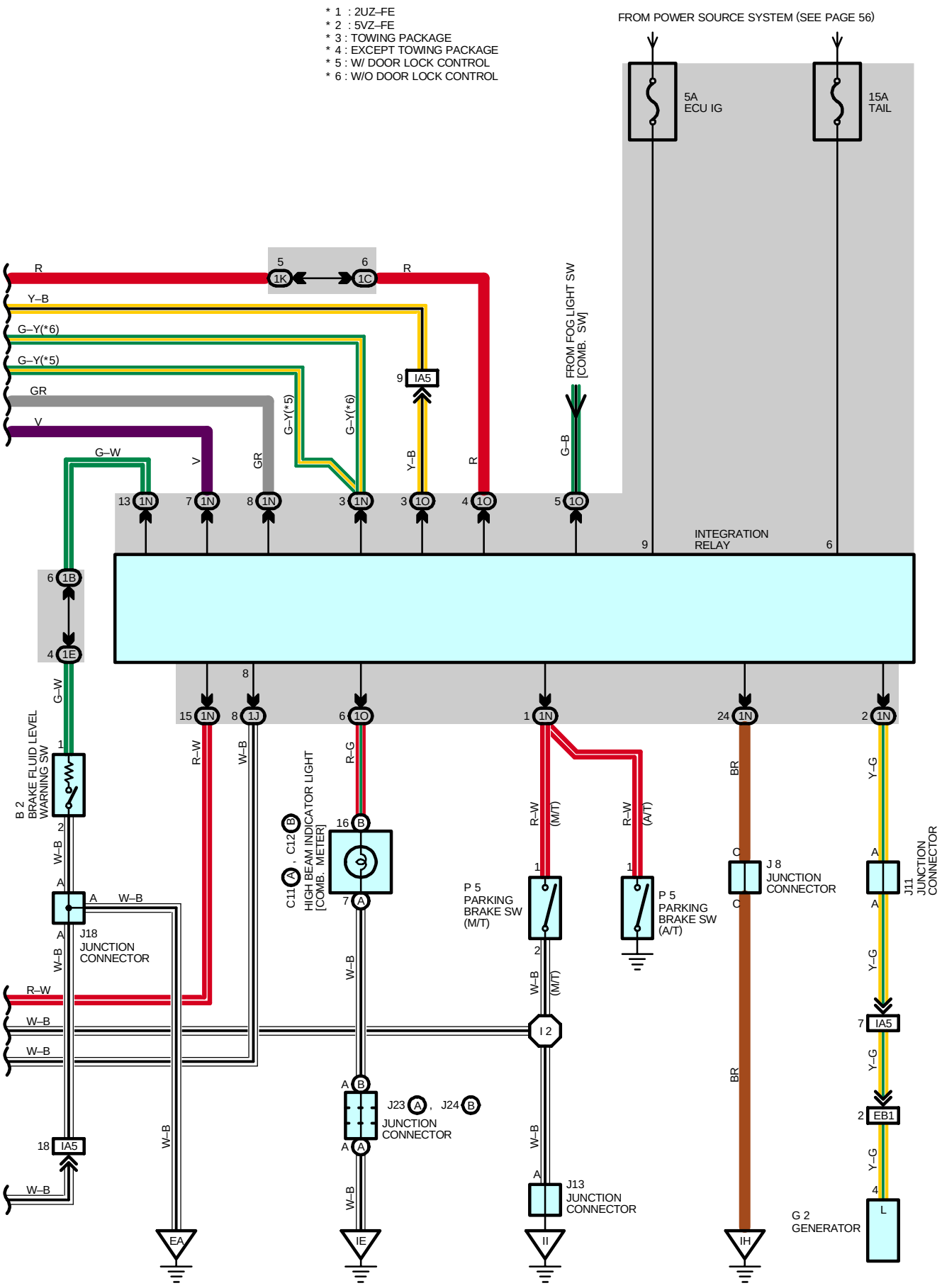
* 1 : 2UZ–FE
* 2 : 5VZ–FE
* 3 : TOWING PACKAGE
* 4 : EXCEPT TOWING PACKAGE
* 5 : W/ DOOR LOCK CONTROL
* 6 : W/O DOOR LOCK CONTROL
FROM POWER SOURCE SYSTEM (SEE PAGE 56)
5A ECU IG
15A TAIL
FROM FOG LIGHT SW [COMB. SW]
INTEGRATION RELAY
B 2 BRAKE FLUID LEVEL WARNING SW
J18 JUNCTION CONNECTOR
HIGH BEAM INDICATOR LIGHT [COMB. METER]
C11 , C12
P 5 PARKING BRAKE SW (M/T)
P 5 PARKING BRAKE SW (A/T)
J 8 JUNCTION CONNECTOR
J11 JUNCTION CONNECTOR
J23 , J24
JUNCTION CONNECTOR
J13 JUNCTION CONNECTOR
G 2 GENERATOR
EA
IE
II
IH
R
Y–B
G–Y(*6)
G–Y(*5)
GR
V
G–W
R–W
W–B
R–G
BR
Y–G
L

HEADLIGHT (w/ DAYTIME RUNNING LIGHT)

SYSTEM OUTLINE

When the following conditions are met while the ignition SW is ON, and if the light control SW is at OFF or TAIL position, the daytime running light is controlled.

* Parking brake lever is released (Parking brake SW is OFF)
* Input signal from the generator

If any of the following conditions are met, the daytime running light control is canceled.

* Ignition SW is turned OFF.
* Light control SW is at HEAD position.

SERVICE HINTS

H–LP RELAY

5–3 : Closed with light control SW at **HEAD** position or dimmer SW at **FLASH** position
Closed with engine running and parking brake lever released

DIMMER RELAY

3–5 : Closed with HEAD relay on and dimmer SW at **HIGH** or **FLASH** position

: PARTS LOCATION

Code	See Page	Code	See Page	Code	See Page
B2	30 (2UZ–FE)	H1	30 (2UZ–FE)	J11	35
	32 (5VZ–FE)		32 (5VZ–FE)	J13	35
C11 A	34	H2	30 (2UZ–FE)	J18	31 (2UZ–FE)
C12 B	34		32 (5VZ–FE)		33 (5VZ–FE)
C15	34	J2	31 (2UZ–FE)	J23 A	35
D2	30 (2UZ–FE)		33 (5VZ–FE)	J24 B	35
	32 (5VZ–FE)	J3	35	P5	35
G2	30 (2UZ–FE)	J7	35		
	32 (5VZ–FE)	J8	35		

: RELAY BLOCKS

Code	See Page	Relay Blocks (Relay Block Location)
2	21	Engine Room R/B (Engine Compartment Left)

: JUNCTION BLOCK AND WIRE HARNESS CONNECTOR

Code	See Page	Junction Block and Wire Harness (Connector Location)
1B	26 (*1)	Cowl Wire and Driver Side J/B (Lower Finish Panel)
1C		
1E	26 (*1)	Engine Room Main Wire and Driver Side J/B (Lower Finish Panel)
1J	26 (*1)	Cowl Wire and Driver Side J/B (Lower Finish Panel)
1K	26 (*1)	Engine Room Main Wire and Driver Side J/B (Lower Finish Panel)
1N	27 (*1)	Cowl Wire and Driver Side J/B (Lower Finish Panel)
1O		

: CONNECTOR JOINING WIRE HARNESS AND WIRE HARNESS

Code	See Page	Joining Wire Harness and Wire Harness (Connector Location)
EB1	40 (2UZ–FE)	Engine No.2 Wire and Engine Room Main Wire (Under the Engine Room R/B)
	42 (5VZ–FE)	
IA5	44	Engine Room Main Wire and Cowl Wire (Left Kick Panel)

* 1 : w/ Daytime Running Light * 2 : w/o Daytime Running Light * 3 : Bench Seat * 4 : Separate Seat, Captain Seat (w/o Power Seat)



: GROUND POINTS

Code	See Page	Ground Points Location
EA	40 (2UZ–FE) 42 (5VZ–FE)	Front Left Fender
IE	44	Left Kick Panel
IF		
IH	44	Right Kick Panel
II		



: SPLICE POINTS

Code	See Page	Wire Harness with Splice Points	Code	See Page	Wire Harness with Splice Points
I2	46	Cowl Wire			

HEADLIGHT (w/o DAYTIME RUNNING LIGHT)

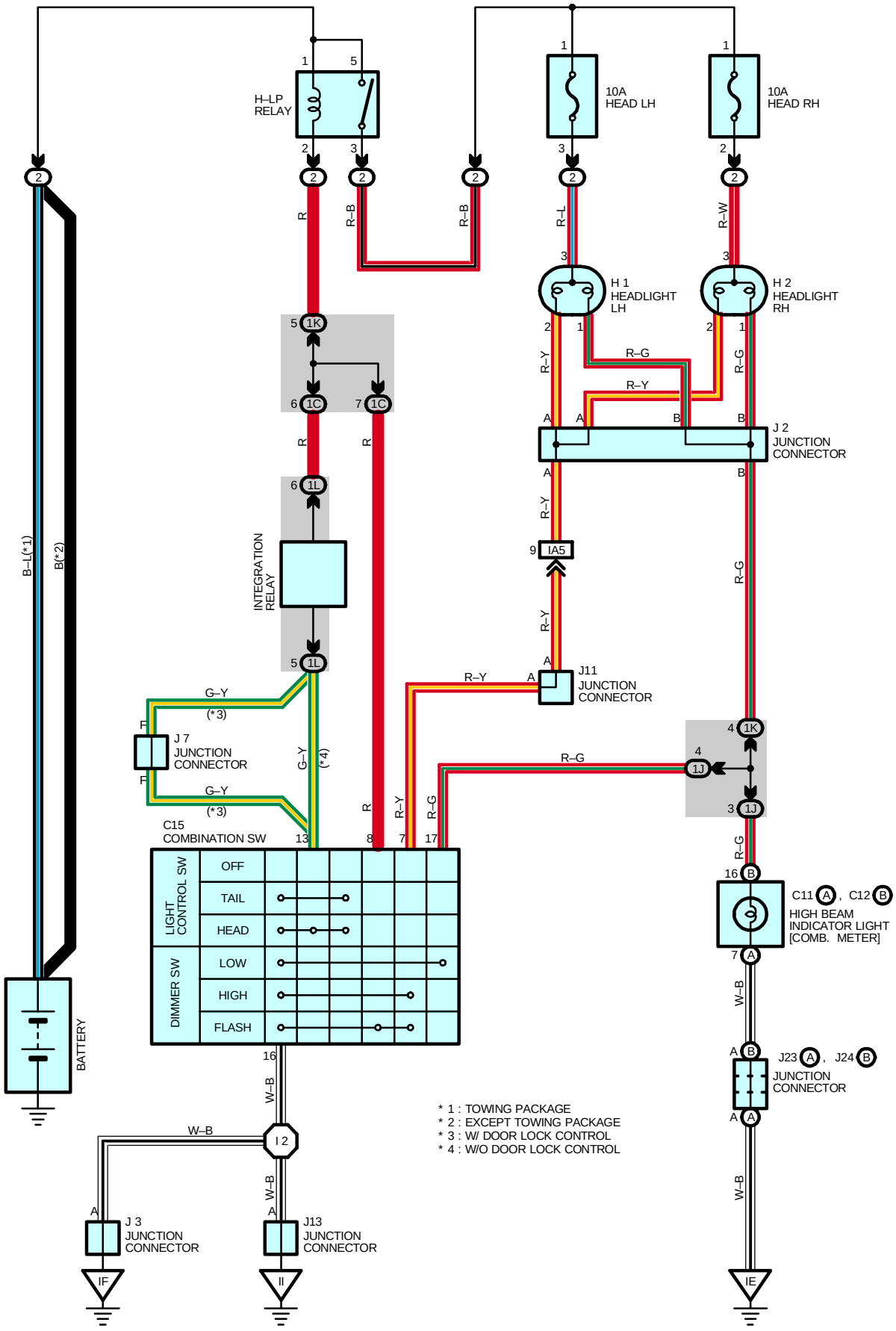

SERVICE HINTS

H–LP RELAY

5–3 : Closed with light control SW at **HEAD** position or dimmer SW at **FLASH** position

: PARTS LOCATION

Code		See Page	Code	See Page	Code		See Page
C11	A	34	H2	30 (2UZ–FE)	J7		35
C12	B	34		32 (5VZ–FE)	J11		35
C15		34	J2	31 (2UZ–FE)	J13		35
H1		30 (2UZ–FE)		33 (5VZ–FE)	J23	A	35
		32 (5VZ–FE)	J3	35	J24	B	35

: RELAY BLOCKS

Code	See Page	Relay Blocks (Relay Block Location)
2	21	Engine Room R/B (Engine Compartment Left)

: JUNCTION BLOCK AND WIRE HARNESS CONNECTOR

Code	See Page	Junction Block and Wire Harness (Connector Location)
1C	22 (*2)	Cowl Wire and Driver Side J/B (Lower Finish Panel)
1J		
1K	22 (*2)	Engine Room Main Wire and Driver Side J/B (Lower Finish Panel)
1L	23 (*2)	Cowl Wire and Driver Side J/B (Lower Finish Panel)

: CONNECTOR JOINING WIRE HARNESS AND WIRE HARNESS

Code	See Page	Joining Wire Harness and Wire Harness (Connector Location)
IA5	44	Engine Room Main Wire and Cowl Wire (Left Kick Panel)

: GROUND POINTS

Code	See Page	Ground Points Location
IE	44	Left Kick Panel
IF		
II	44	Right Kick Panel

: SPLICE POINTS

Code	See Page	Wire Harness with Splice Points	Code	See Page	Wire Harness with Splice Points
I2	46	Cowl Wire			

* 1 : w/ Daytime Running Light * 2 : w/o Daytime Running Light * 3 : Bench Seat * 4 : Separate Seat, Captain Seat (w/o Power Seat)

FOG LIGHT (w/ DAYTIME RUNNING LIGHT)

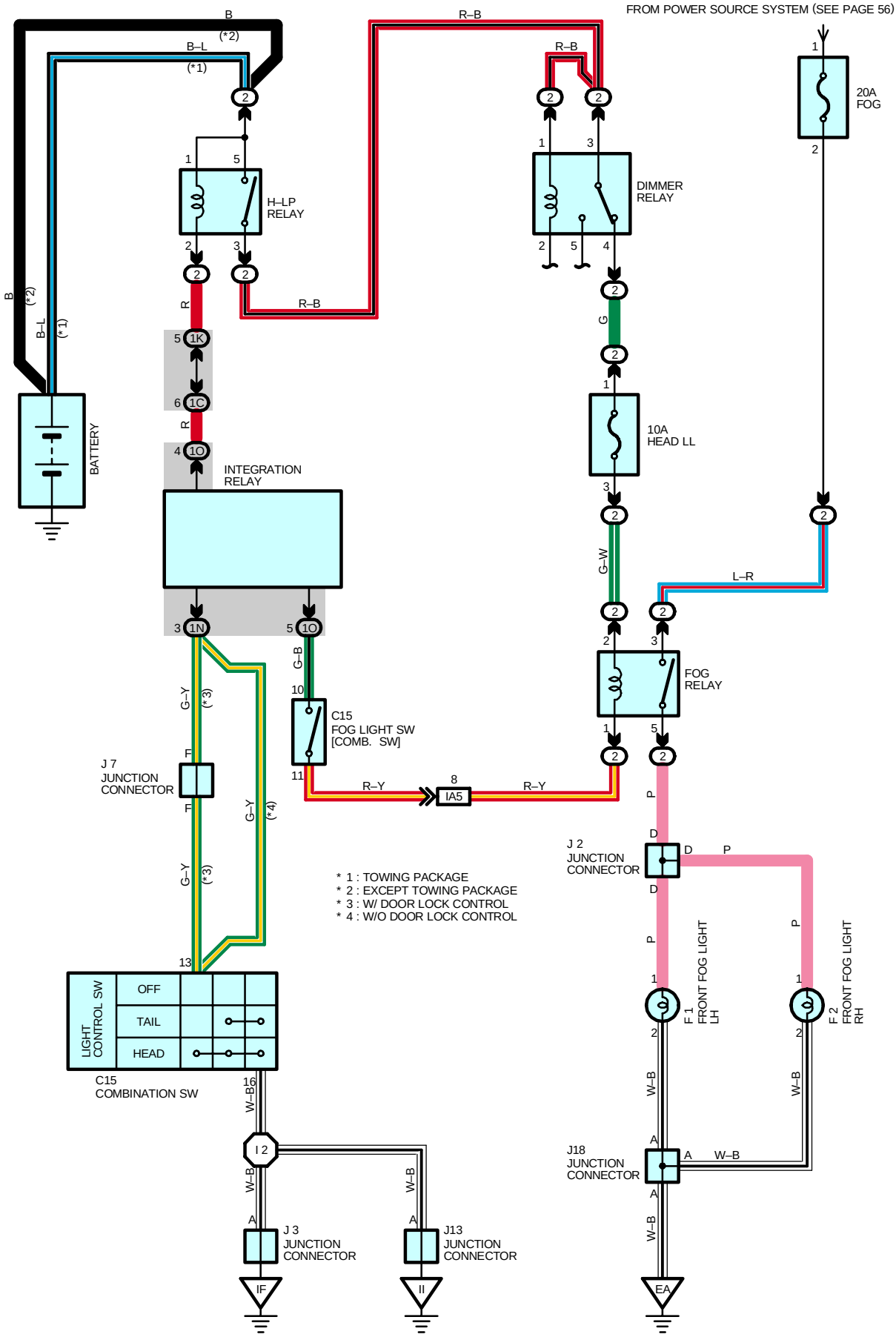

SERVICE HINTS

FOG RELAY

3–5 : Closed with light control SW at **HEAD** position, dimmer SW at **LOW** position and fog light SW at **ON** position

: PARTS LOCATION

Code	See Page	Code	See Page	Code	See Page
C15	34	F2	32 (5VZ–FE)	J7	35
F1	30 (2UZ–FE)	J2	31 (2UZ–FE)	J13	35
	32 (5VZ–FE)		33 (5VZ–FE)	J18	31 (2UZ–FE)
F2	30 (2UZ–FE)	J3	35		33 (5VZ–FE)

: RELAY BLOCKS

Code	See Page	Relay Blocks (Relay Block Location)
2	21	Engine Room R/B (Engine Compartment Left)

: JUNCTION BLOCK AND WIRE HARNESS CONNECTOR

Code	See Page	Junction Block and Wire Harness (Connector Location)
1C	26 (*1)	Cowl Wire and Driver Side J/B (Lower Finish Panel)
1K	26 (*1)	Engine Room Main Wire and Driver Side J/B (Lower Finish Panel)
1N	27 (*1)	Cowl Wire and Driver Side J/B (Lower Finish Panel)
1O		

: CONNECTOR JOINING WIRE HARNESS AND WIRE HARNESS

Code	See Page	Joining Wire Harness and Wire Harness (Connector Location)
IA5	44	Engine Room Main Wire and Cowl Wire (Left Kick Panel)

: GROUND POINTS

Code	See Page	Ground Points Location
EA	40 (2UZ–FE)	Front Left Fender
	42 (5VZ–FE)	
IF	44	Left Kick Panel
II	44	Right Kick Panel

: SPLICE POINTS

Code	See Page	Wire Harness with Splice Points	Code	See Page	Wire Harness with Splice Points
I2	46	Cowl Wire			

* 1 : w/ Daytime Running Light * 2 : w/o Daytime Running Light * 3 : Bench Seat * 4 : Separate Seat, Captain Seat (w/o Power Seat)

FOG LIGHT (w/o DAYTIME RUNNING LIGHT)

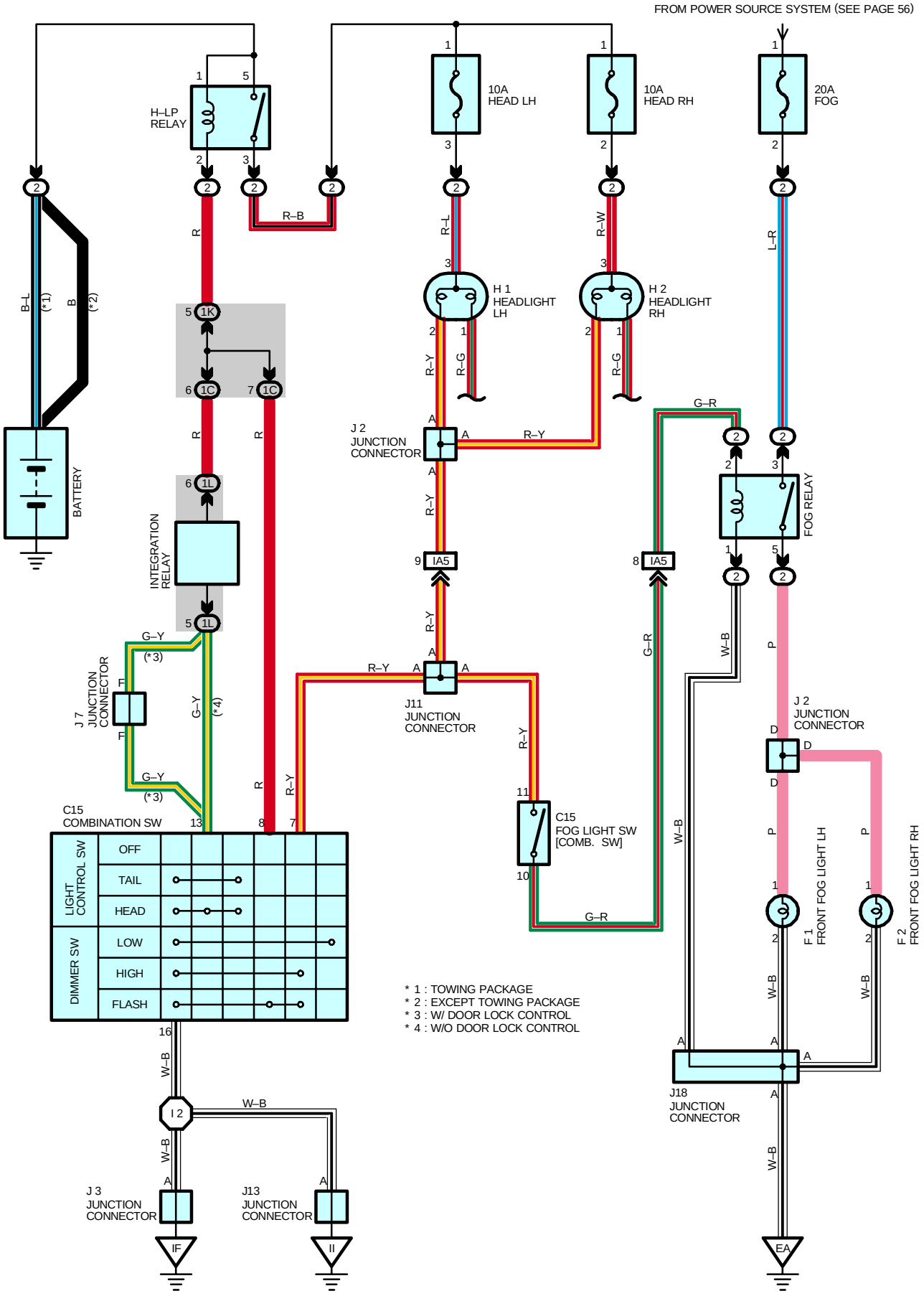

SERVICE HINTS

FOG RELAY

3–5 : Closed with light control SW at **HEAD** position, dimmer SW at **LOW** position and fog light SW at **ON** position

: PARTS LOCATION

Code	See Page	Code	See Page	Code	See Page
C15	34	H1	32 (5VZ–FE)	J7	35
F1	30 (2UZ–FE)	H2	30 (2UZ–FE)	J11	35
	32 (5VZ–FE)		32 (5VZ–FE)	J13	35
F2	30 (2UZ–FE)	J2	31 (2UZ–FE)	J18	31 (2UZ–FE)
	32 (5VZ–FE)		33 (5VZ–FE)		33 (5VZ–FE)
H1	30 (2UZ–FE)	J3	35		

: RELAY BLOCKS

Code	See Page	Relay Blocks (Relay Block Location)
2	21	Engine Room R/B (Engine Compartment Left)

: JUNCTION BLOCK AND WIRE HARNESS CONNECTOR

Code	See Page	Junction Block and Wire Harness (Connector Location)
1C	22 (*2)	Cowl Wire and Driver Side J/B (Lower Finish Panel)
1K	22 (*2)	Engine Room Main Wire and Driver Side J/B (Lower Finish Panel)
1L	23 (*2)	Cowl Wire and Driver Side J/B (Lower Finish Panel)

: CONNECTOR JOINING WIRE HARNESS AND WIRE HARNESS

Code	See Page	Joining Wire Harness and Wire Harness (Connector Location)
IA5	44	Engine Room Main Wire and Cowl Wire (Left Kick Panel)

: GROUND POINTS

Code	See Page	Ground Points Location
EA	40 (2UZ–FE)	Front Left Fender
	42 (5VZ–FE)	
IF	44	Left Kick Panel
II	44	Right Kick Panel

: SPLICE POINTS

Code	See Page	Wire Harness with Splice Points	Code	See Page	Wire Harness with Splice Points
I2	46	Cowl Wire			

* 1 : w/ Daytime Running Light * 2 : w/o Daytime Running Light * 3 : Bench Seat * 4 : Separate Seat, Captain Seat (w/o Power Seat)

BACK–UP LIGHT

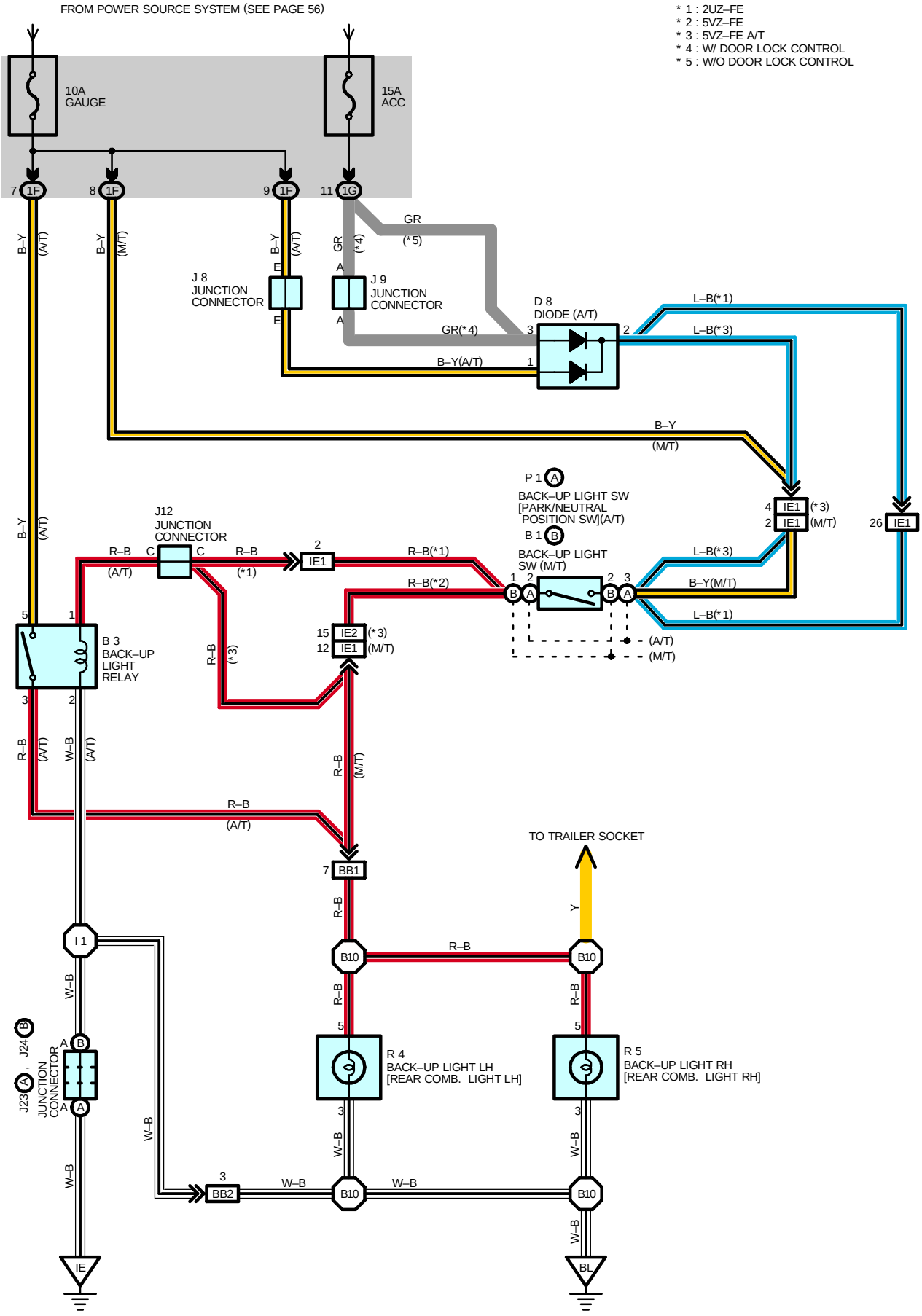

SERVICE HINTS

P1 (A) BACK–UP LIGHT SW [PARK/NEUTRAL POSITION SW] (A/T),
B1 (B) BACK–UP LIGHT SW (M/T)
(A) 3–(A) 2, (B) 2–(B) 1 : Closed with shift lever in **R** position

B3 BACK–UP LIGHT RELAY (A/T)
5–3 : Closed with shift level in **R** position and ignition SW at **ON** position

: PARTS LOCATION

Code		See Page	Code		See Page	Code	See Page
B1	B	32 (5VZ–FE)	J12		35	R4	36 (Access Cab)
B3		34	J23	A	35		37 (Standard Cab)
D8		34	J24	B	35	R5	36 (Access Cab)
J8		35	P1	A	31 (2UZ–FE)		37 (Standard Cab)
J9		35			33 (5VZ–FE)		

: JUNCTION BLOCK AND WIRE HARNESS CONNECTOR

Code	See Page	Junction Block and Wire Harness (Connector Location)
1F	22 (*2)	Cowl Wire and Driver Side J/B (Lower Finish Panel)
	26 (*1)	
1G	22 (*2)	
	26 (*1)	

: CONNECTOR JOINING WIRE HARNESS AND WIRE HARNESS

Code	See Page	Joining Wire Harness and Wire Harness (Connector Location)
IE1	46	Engine Wire and Cowl Wire (Right Side of Instrument Panel)
IE2		
BB1	48 (Access Cab)	Frame Wire and Cowl Wire (Under the Driver's Seat)
	50 (Standard Cab)	
BB2	48 (Access Cab)	
	50 (Standard Cab)	

: GROUND POINTS

Code	See Page	Ground Points Location
IE	44	Left Kick Panel
BL	48 (Access Cab)	Surrounding of the Front of the Fuel Tank
	50 (Standard Cab)	

: SPLICE POINTS

Code	See Page	Wire Harness with Splice Points	Code	See Page	Wire Harness with Splice Points
I1	46	Cowl Wire	B10	50 (Standard Cab)	Frame Wire
B10	48 (Access Cab)	Frame Wire			

* 1 : w/ Daytime Running Light * 2 : w/o Daytime Running Light * 3 : Bench Seat * 4 : Separate Seat, Captain Seat (w/o Power Seat)

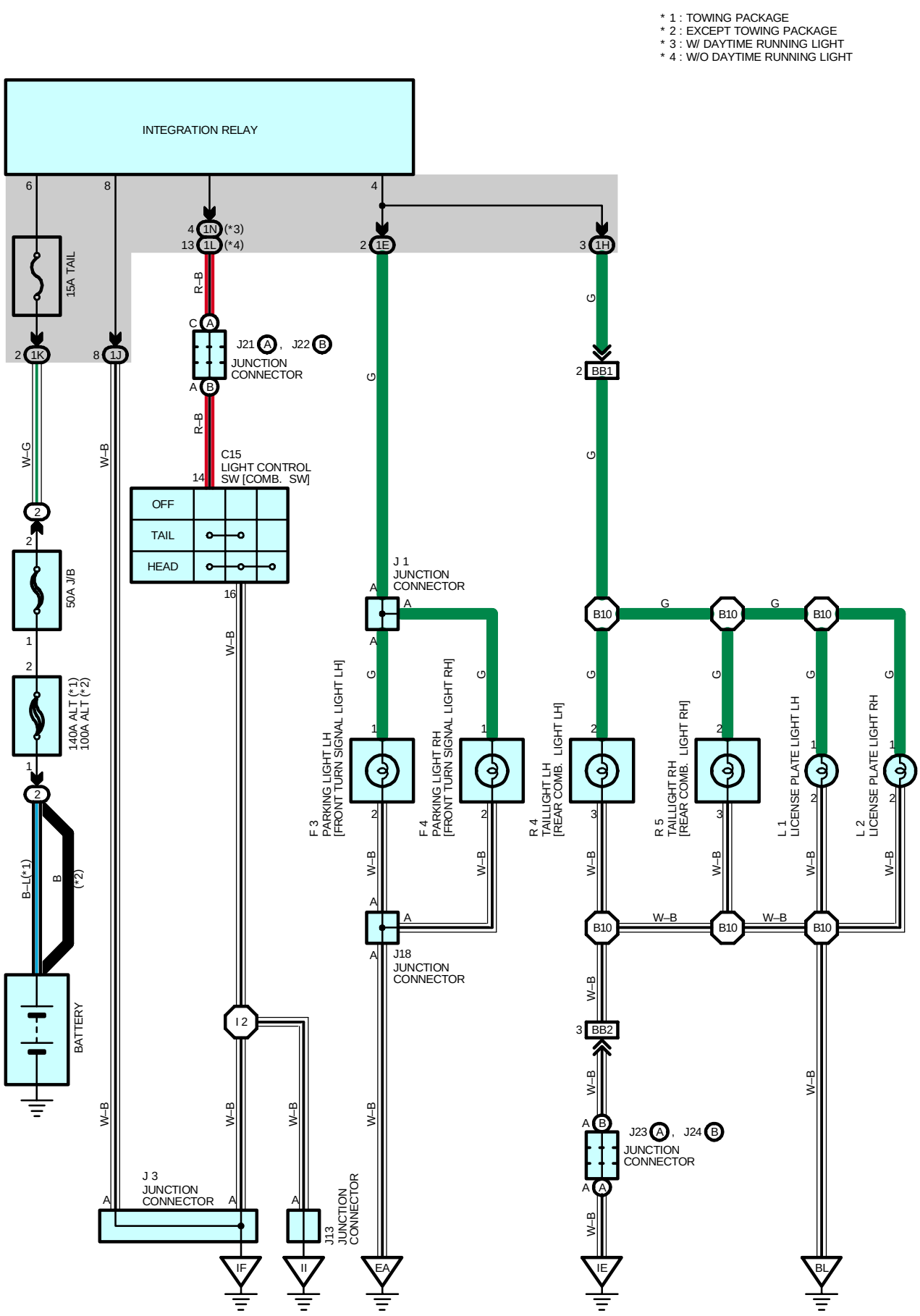
* 1 : TOWING PACKAGE
* 2 : EXCEPT TOWING PACKAGE
* 3 : W/ DAYTIME RUNNING LIGHT
* 4 : W/O DAYTIME RUNNING LIGHT
INTEGRATION RELAY
15A TAIL
50A J/B
140A ALT (*1)
100A ALT (*2)
BATTERY
C15
LIGHT CONTROL
SW [COMB. SW]
OFF
TAIL
HEAD
J21 , J22
JUNCTION
CONNECTOR
J 1
JUNCTION
CONNECTOR
J18
JUNCTION
CONNECTOR
J 3
JUNCTION
CONNECTOR
J13
JUNCTION
CONNECTOR
J23 , J24
JUNCTION
CONNECTOR
F 3
PARKING LIGHT LH
[FRONT TURN SIGNAL LIGHT LH]
F 4
PARKING LIGHT RH
[FRONT TURN SIGNAL LIGHT RH]
R 4
TAILLIGHT LH
[REAR COMB. LIGHT LH]
R 5
TAILLIGHT RH
[REAR COMB. LIGHT RH]
L 1
LICENSE PLATE LIGHT LH
L 2
LICENSE PLATE LIGHT RH
IF
II
EA
IE
BL

SERVICE HINTS

C15 LIGHT CONTROL SW [COMB. SW]

14–16 : Closed with light control SW at **TAIL** or **HEAD** position

: PARTS LOCATION

Code	See Page	Code		See Page	Code	See Page
C15	34	J13		35	L1	37 (Standard Cab)
F3	30 (2UZ–FE)	J18		31 (2UZ–FE)	L2	36 (Access Cab)
	32 (5VZ–FE)			33 (5VZ–FE)		37 (Standard Cab)
F4	30 (2UZ–FE)	J21	A	35	R4	36 (Access Cab)
	32 (5VZ–FE)	J22	B	35		37 (Standard Cab)
J1	31 (2UZ–FE)	J23	A	35	R5	36 (Access Cab)
	33 (5VZ–FE)	J24	B	35		37 (Standard Cab)
J3	35	L1		36 (Access Cab)		

: RELAY BLOCKS

Code	See Page	Relay Blocks (Relay Block Location)
2	21	Engine Room R/B (Engine Compartment Left)

: JUNCTION BLOCK AND WIRE HARNESS CONNECTOR

Code	See Page	Junction Block and Wire Harness (Connector Location)
1E	22 (*2)	Engine Room Main Wire and Driver Side J/B (Lower Finish Panel)
	26 (*1)	
1H	22 (*2)	Cowl Wire and Driver Side J/B (Lower Finish Panel)
	26 (*1)	
1J	22 (*2)	
	26 (*1)	
1K	22 (*2)	Engine Room Main Wire and Driver Side J/B (Lower Finish Panel)
	26 (*1)	
1L	23 (*2)	Cowl Wire and Driver Side J/B (Lower Finish Panel)
1N	27 (*1)	

: CONNECTOR JOINING WIRE HARNESS AND WIRE HARNESS

Code	See Page	Joining Wire Harness and Wire Harness (Connector Location)
BB1	48 (Access Cab)	Frame Wire and Cowl Wire (Under the Driver's Seat)
	50 (Standard Cab)	
BB2	48 (Access Cab)	
	50 (Standard Cab)	

: GROUND POINTS

Code	See Page	Ground Points Location
EA	40 (2UZ–FE)	Front Left Fender
	42 (5VZ–FE)	
IE	44	Left Kick Panel
IF		
II	44	Right Kick Panel
BL	48 (Access Cab)	Surrounding of the Front of the Fuel Tank
	50 (Standard Cab)	

: SPLICE POINTS

Code	See Page	Wire Harness with Splice Points	Code	See Page	Wire Harness with Splice Points
I2	46	Cowl Wire	B10	50 (Standard Cab)	Frame Wire
B10	48 (Access Cab)	Frame Wire			

* 1 : w/ Daytime Running Light * 2 : w/o Daytime Running Light * 3 : Bench Seat * 4 : Separate Seat, Captain Seat (w/o Power Seat)

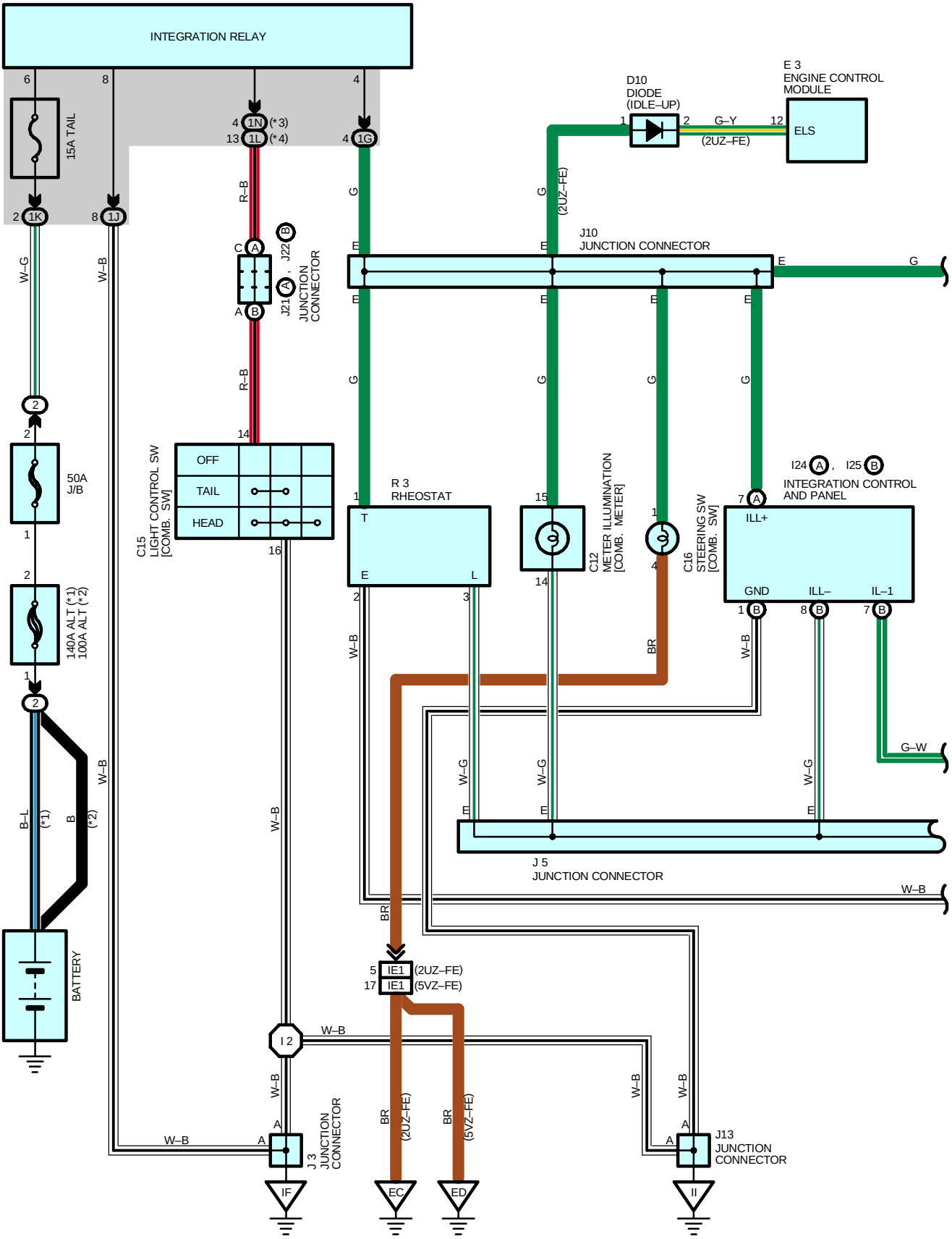
INTEGRATION RELAY
15A TAIL
50A J/B
140A ALT (*1)
100A ALT (*2)
BATTERY
D10 DIODE (IDLE–UP)
E 3 ENGINE CONTROL MODULE
ELS
G–Y
(2UZ–FE)
J10 JUNCTION CONNECTOR
J21 , J22 JUNCTION CONNECTOR
C15 LIGHT CONTROL SW [COMB. SW]
OFF
TAIL
HEAD
R 3 RHEOSTAT
C12 METER ILLUMINATION [COMB. METER]
C16 STEERING SW [COMB. SW]
I24 , I25 INTEGRATION CONTROL AND PANEL
ILL+
GND
ILL–
IL–1
G–W
J 5 JUNCTION CONNECTOR
IE1 (2UZ–FE)
IE1 (5VZ–FE)
I 2
J 3 JUNCTION CONNECTOR
J13 JUNCTION CONNECTOR
IF
EC
ED
II
W–B
W–G
R–B
B–L
B
BR
G

* 1 : TOWING PACKAGE
* 2 : EXCEPT TOWING PACKAGE
* 3 : W/ DAYTIME RUNNING LIGHT
* 4 : W/O DAYTIME RUNNING LIGHT

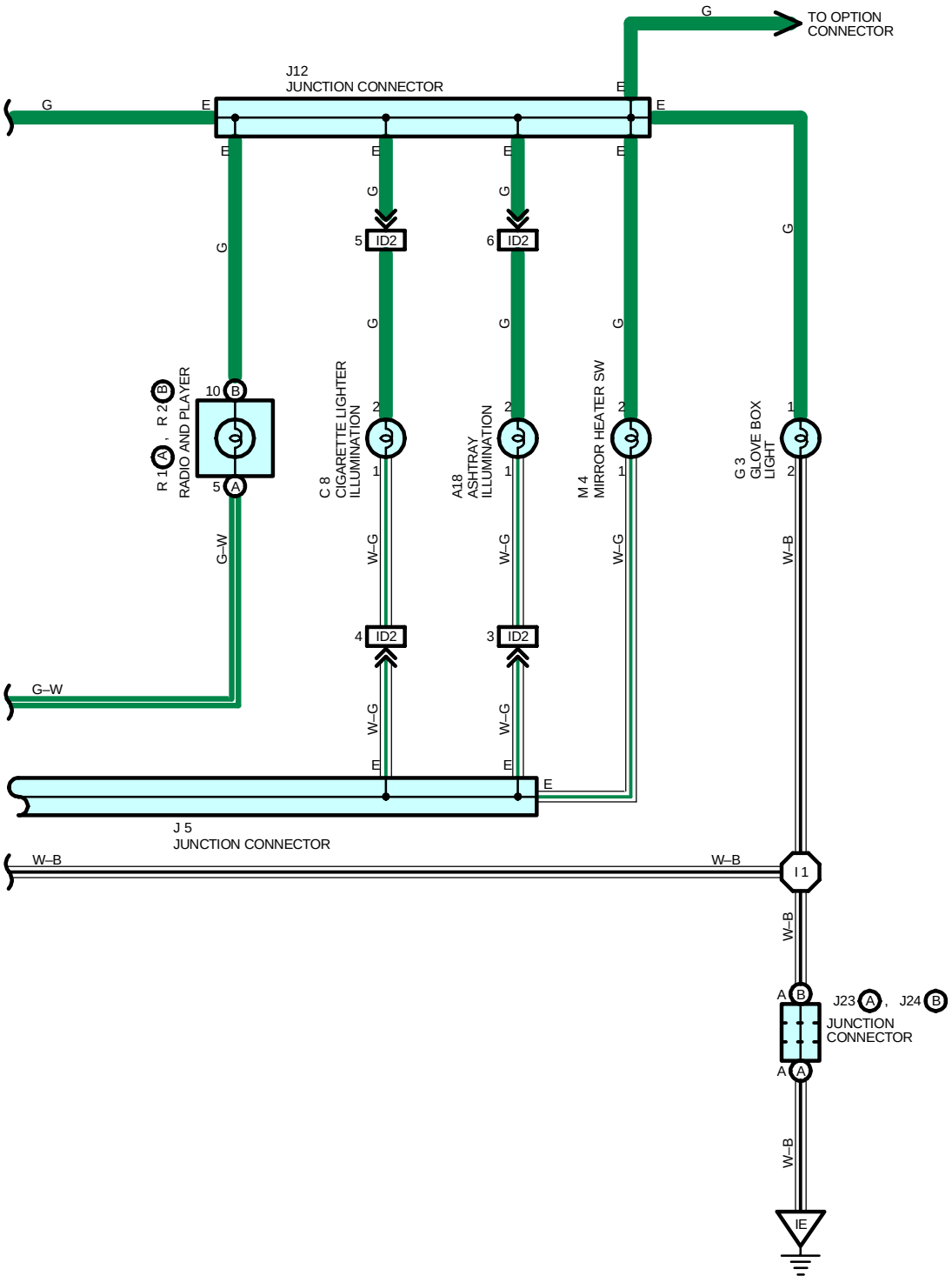

ILLUMINATION

SERVICE HINTS

C15 LIGHT CONTROL SW [COMB. SW]

14–16 : Closed with light control SW at **TAIL** or **HEAD** position

: PARTS LOCATION

Code	See Page	Code	See Page	Code	See Page
A18	34	I24 A	35	J22 B	35
C8	34	I25 B	35	J23 A	35
C12	34	J3	35	J24 B	35
C15	34	J5	35	M4	35
C16	34	J10	35	R1 A	35
D10	34	J12	35	R2 B	35
E3	34	J13	35	R3	35
G3	35	J21 A	35		

: RELAY BLOCKS

Code	See Page	Relay Blocks (Relay Block Location)
2	21	Engine Room R/B (Engine Compartment Left)

: JUNCTION BLOCK AND WIRE HARNESS CONNECTOR

Code	See Page	Junction Block and Wire Harness (Connector Location)
1G	22 (*2)	Cowl Wire and Driver Side J/B (Lower Finish Panel)
	26 (*1)	
1J	22 (*2)	
	26 (*1)	
1K	22 (*2)	Engine Room Main Wire and Driver Side J/B (Lower Finish Panel)
	26 (*1)	
1L	23 (*2)	Cowl Wire and Driver Side J/B (Lower Finish Panel)
1N	27 (*1)	

: CONNECTOR JOINING WIRE HARNESS AND WIRE HARNESS

Code	See Page	Joining Wire Harness and Wire Harness (Connector Location)
ID2	46	Cigarette Lighter Wire and Cowl Wire (Instrument Panel Brace LH)
IE1	46	Engine Wire and Cowl Wire (Right Side of Instrument Panel)

: GROUND POINTS

Code	See Page	Ground Points Location
EC	40 (2UZ–FE)	Rear Bank of Left Cylinder Head
ED	42 (5VZ–FE)	Intake Manifold Left
IE	44	Left Kick Panel
IF		
II	44	Right Kick Panel

: SPLICE POINTS

Code	See Page	Wire Harness with Splice Points	Code	See Page	Wire Harness with Splice Points
I1	46	Cowl Wire	I2	46	Cowl Wire

* 1 : w/ Daytime Running Light * 2 : w/o Daytime Running Light * 3 : Bench Seat * 4 : Separate Seat, Captain Seat (w/o Power Seat)

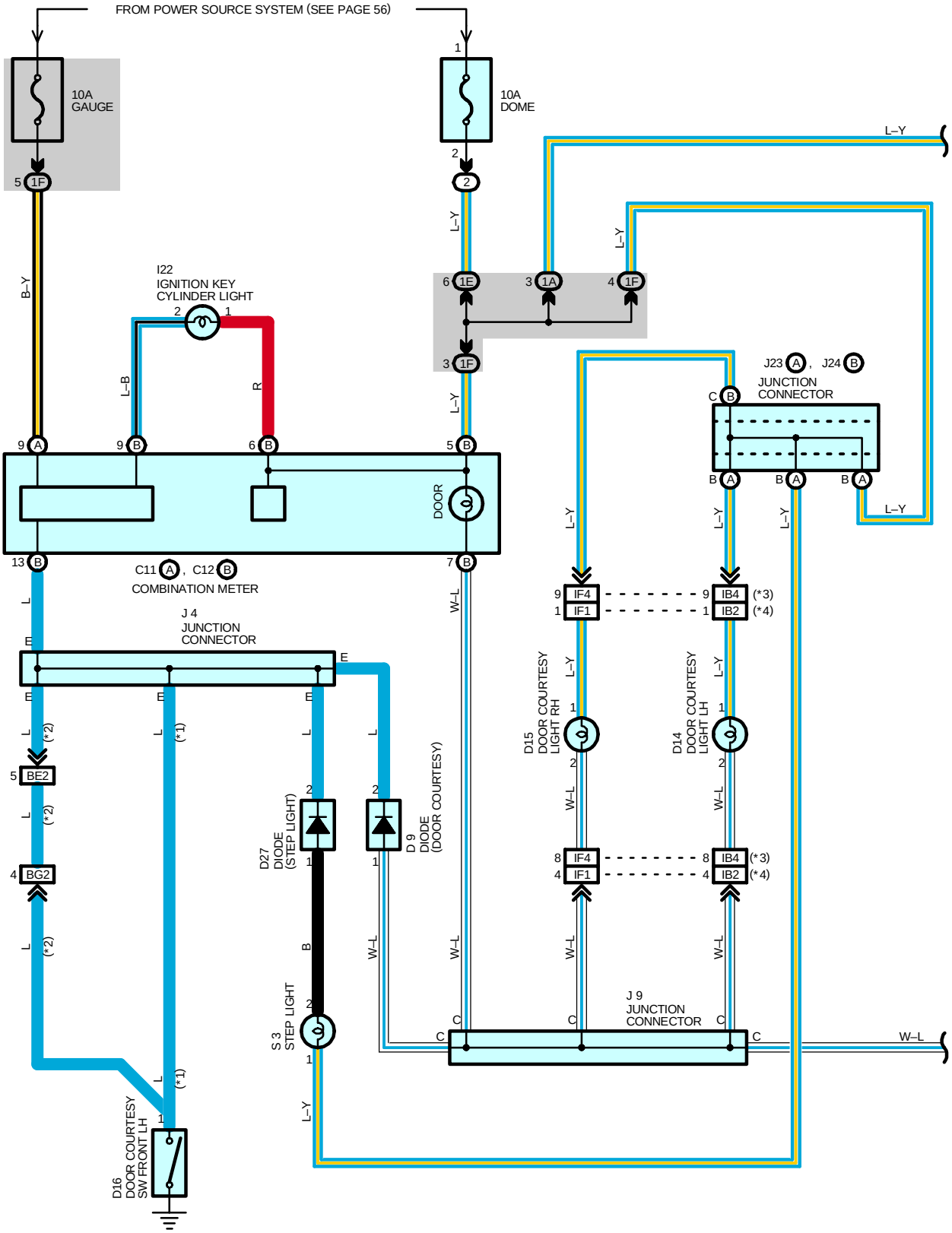
FROM POWER SOURCE SYSTEM (SEE PAGE 56)
10A
GAUGE
10A
DOME
I22
IGNITION KEY
CYLINDER LIGHT
J23 A , J24 B
JUNCTION
CONNECTOR
DOOR
C11 A , C12 B
COMBINATION METER
J 4
JUNCTION
CONNECTOR
D15
DOOR COURTESY
LIGHT RH
D14
DOOR COURTESY
LIGHT LH
D27
DIODE
(STEP LIGHT)
D 9
DIODE
(DOOR COURTESY)
S 3
STEP LIGHT
J 9
JUNCTION
CONNECTOR
D16
DOOR COURTESY
SW FRONT LH
L–Y
B–Y
L–B
R
W–L
L
B
(*1)
(*2)
(*3)
(*4)

* 1 : STANDARD CAB
* 2 : ACCESS CAB
* 3 : W/ DOOR LOCK CONTROL
* 4 : W/O DOOR LOCK CONTROL

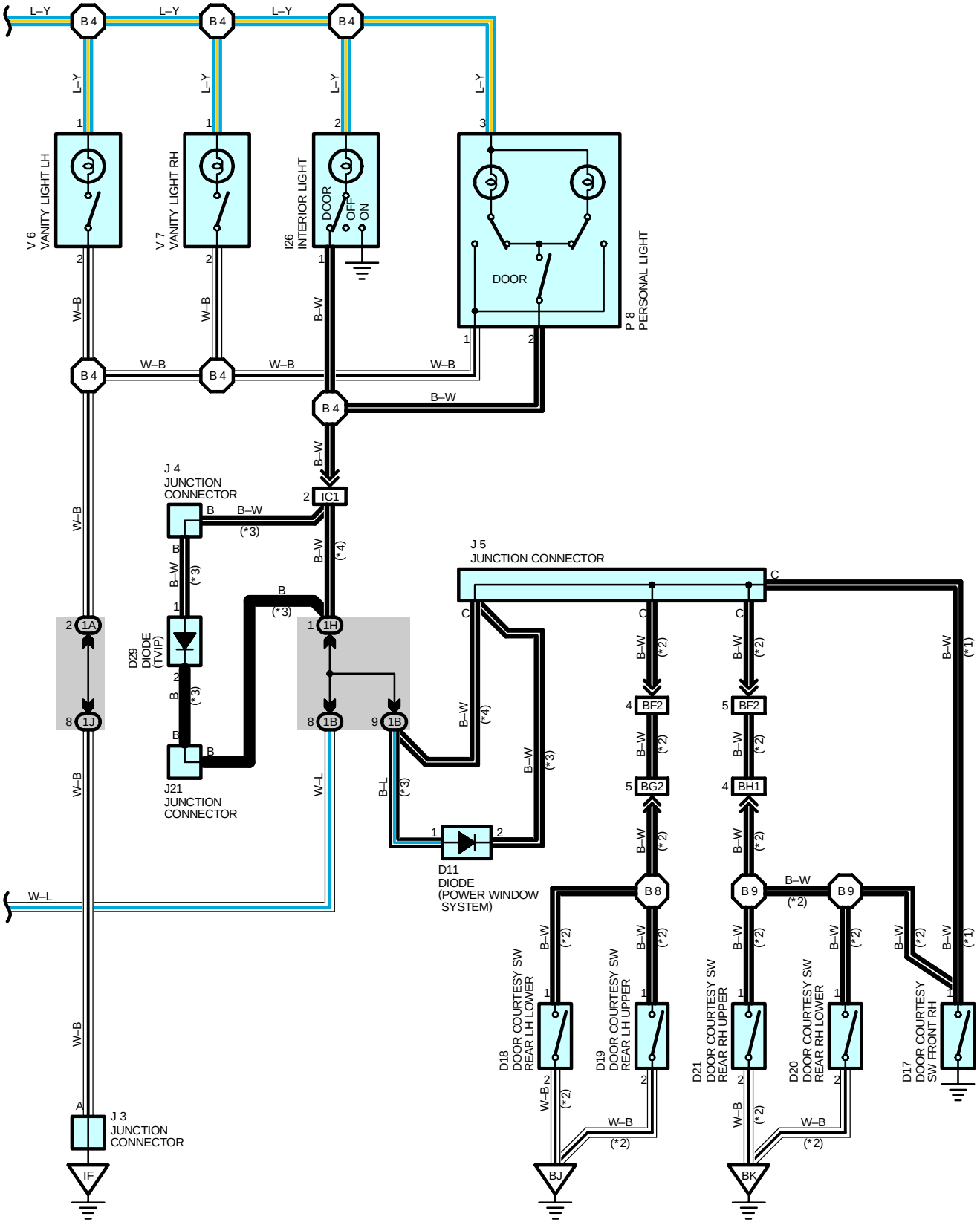

INTERIOR LIGHT

SERVICE HINTS

C11 (A), C12 (B) COMBINATION METER

(A) 9–GROUND : Approx. **12** volts with ignition SW at **ON** or **ST** position
(B) 5–GROUND : Always approx. **12** volts
(B) 7–GROUND : Continuity with each door open
(B)13–GROUND : Continuity with front LH door open

: PARTS LOCATION

Code	See Page	Code	See Page	Code	See Page
C11 A	34	D17	37 (Standard Cab)	J4	35
C12 B	34	D18	36 (Access Cab)	J5	35
D9	34	D19	36 (Access Cab)	J9	35
D11	34	D20	36 (Access Cab)	J21	35
D14	36 (Access Cab)	D21	36 (Access Cab)	J23 A	35
	37 (Standard Cab)	D27	34	J24 B	35
D15	36 (Access Cab)	D29	34	P8	36 (Access Cab)
	37 (Standard Cab)	I22	35		37 (Standard Cab)
D16	36 (Access Cab)	I26	36 (Access Cab)	S3	35
	37 (Standard Cab)		37 (Standard Cab)	V6	36 (Access Cab)
D17	36 (Access Cab)	J3	35	V7	36 (Access Cab)

: RELAY BLOCKS

Code	See Page	Relay Blocks (Relay Block Location)
2	21	Engine Room R/B (Engine Compartment Left)

: JUNCTION BLOCK AND WIRE HARNESS CONNECTOR

Code	See Page	Junction Block and Wire Harness (Connector Location)
1A	22 (*2)	Roof Wire and Driver Side J/B (Lower Finish Panel)
	26 (*1)	
1B	22 (*2)	Cowl Wire and Driver Side J/B (Lower Finish Panel)
	26 (*1)	
1E	22 (*2)	Engine Room Main Wire and Driver Side J/B (Lower Finish Panel)
	26 (*1)	
1F	22 (*2)	Cowl Wire and Driver Side J/B (Lower Finish Panel)
	26 (*1)	
1H	22 (*2)	
	26 (*1)	
1J	22 (*2)	
	26 (*1)	

: CONNECTOR JOINING WIRE HARNESS AND WIRE HARNESS

Code	See Page	Joining Wire Harness and Wire Harness (Connector Location)
IB2	44	Front Door LH Wire and Cowl Wire (Left Kick Panel)
IB4		
IC1	44	Cowl Wire and Roof Wire (Left Side of Instrument Panel)
IF1	46	Front Door RH Wire and Cowl Wire (Right Kick Panel)
IF4		
BE2	48 (Access Cab)	Floor No.2 Wire and Cowl Wire (Center of Left Rocker Panel)
BF2	48 (Access Cab)	Floor No.1 Wire and Cowl Wire (Center of Right Rocker Panel)
BG2	48 (Access Cab)	Floor No.2 Wire and Rear Door No.1 Wire LH (Under the Left Quarter Panel)
BH1	48 (Access Cab)	Floor No.1 Wire and Rear Door No.1 Wire RH (Under the Right Quarter Panel)

* 1 : w/ Daytime Running Light * 2 : w/o Daytime Running Light * 3 : Bench Seat * 4 : Separate Seat, Captain Seat (w/o Power Seat)



: GROUND POINTS

Code	See Page	Ground Points Location
IF	44	Left Kick Panel
BJ	48 (Access Cab)	Inside of Rear Door LH
BK	48 (Access Cab)	Inside of Rear Door RH



: SPLICE POINTS

Code	See Page	Wire Harness with Splice Points	Code	See Page	Wire Harness with Splice Points
B4	48 (Access Cab)	Roof Wire	B8	48 (Access Cab)	Rear Door No.1 Wire LH
	50 (Standard Cab)		B9	48 (Access Cab)	Rear Door No.1 Wire RH

TURN SIGNAL AND HAZARD WARNING LIGHT

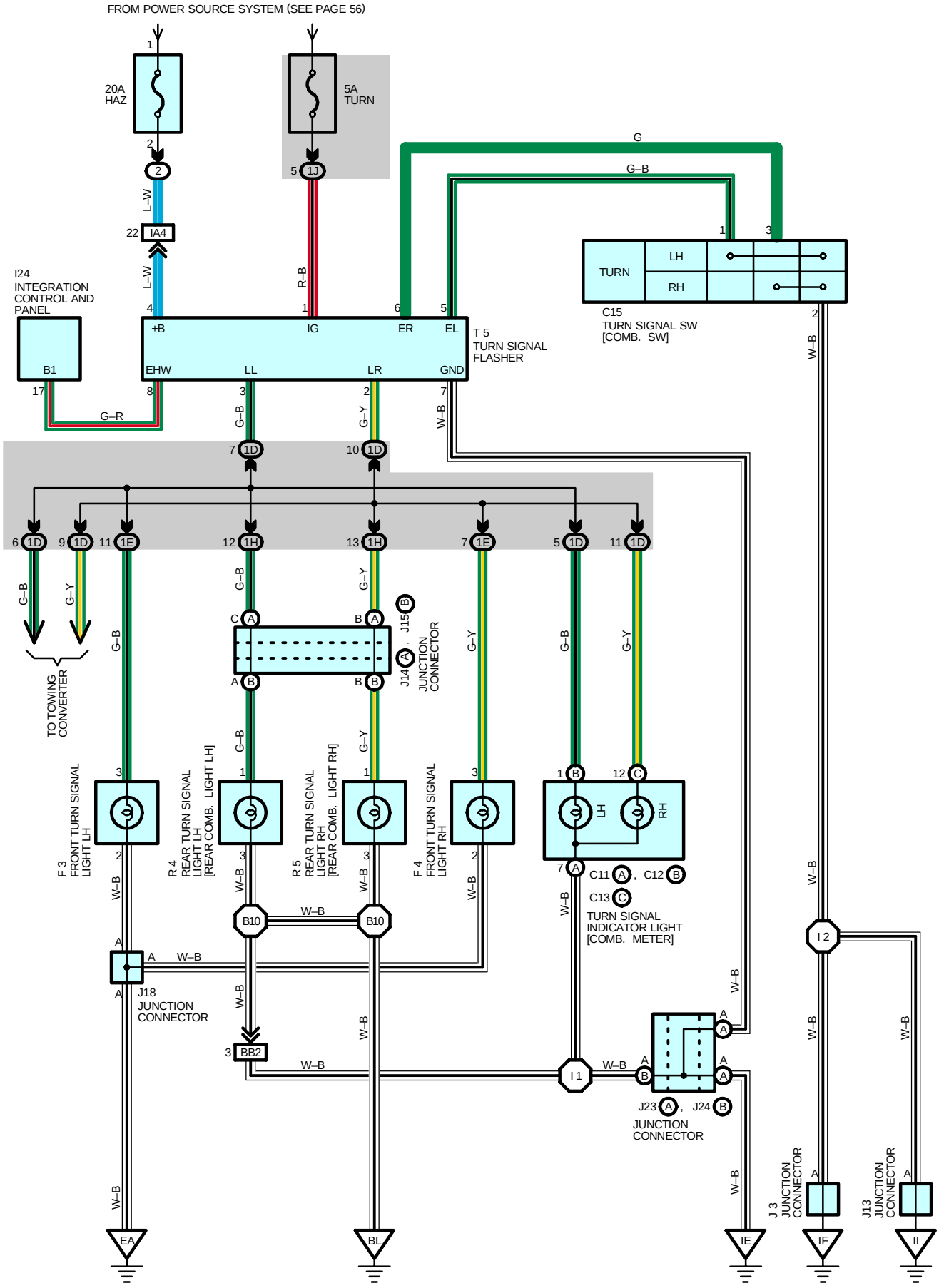

SERVICE HINTS

T5 TURN SIGNAL FLASHER

4–GROUND : Always approx. **12** volts
1–GROUND : Approx. **12** volts with ignition SW at **ON** or **ST** position
7–GROUND : Always continuity

: PARTS LOCATION

Code		See Page	Code		See Page	Code		See Page
C11	A	34	I24		35	J18		33 (5VZ–FE)
C12	B	34	J3		35	J23	A	35
C13	C	34	J13		35	J24	B	35
C15		34	J14	A	36 (Access Cab)	R4		36 (Access Cab)
F3		30 (2UZ–FE)			37 (Standard Cab)			37 (Standard Cab)
		32 (5VZ–FE)	J15	B	36 (Access Cab)	R5		36 (Access Cab)
F4		30 (2UZ–FE)			37 (Standard Cab)			37 (Standard Cab)
		32 (5VZ–FE)	J18		31 (2UZ–FE)	T5		35

: RELAY BLOCKS

Code	See Page	Relay Blocks (Relay Block Location)
2	21	Engine Room R/B (Engine Compartment Left)

: JUNCTION BLOCK AND WIRE HARNESS CONNECTOR

Code	See Page	Junction Block and Wire Harness (Connector Location)
1D	22 (*2)	Cowl Wire and Driver Side J/B (Lower Finish Panel)
	26 (*1)	
1E	22 (*2)	Engine Room Main Wire and Driver Side J/B (Lower Finish Panel)
	26 (*1)	
1H	22 (*2)	Cowl Wire and Driver Side J/B (Lower Finish Panel)
	26 (*1)	
1J	22 (*2)	
	26 (*1)	

: CONNECTOR JOINING WIRE HARNESS AND WIRE HARNESS

Code	See Page	Joining Wire Harness and Wire Harness (Connector Location)
IA4	44	Engine Room Main Wire and Cowl Wire (Left Kick Panel)
BB2	48 (Access Cab)	Frame Wire and Cowl Wire (Under the Driver's Seat)
	50 (Standard Cab)	

: GROUND POINTS

Code	See Page	Ground Points Location
EA	40 (2UZ–FE)	Front Left Fender
	42 (5VZ–FE)	
IE	44	Left Kick Panel
IF		
II	44	Right Kick Panel
BL	48 (Access Cab)	Surrounding of the Front of the Fuel Tank
	50 (Standard Cab)	

: SPLICE POINTS

Code	See Page	Wire Harness with Splice Points	Code	See Page	Wire Harness with Splice Points
I1	46	Cowl Wire	B10	48 (Access Cab)	Frame Wire
I2				50 (Standard Cab)	

* 1 : w/ Daytime Running Light * 2 : w/o Daytime Running Light * 3 : Bench Seat * 4 : Separate Seat, Captain Seat (w/o Power Seat)

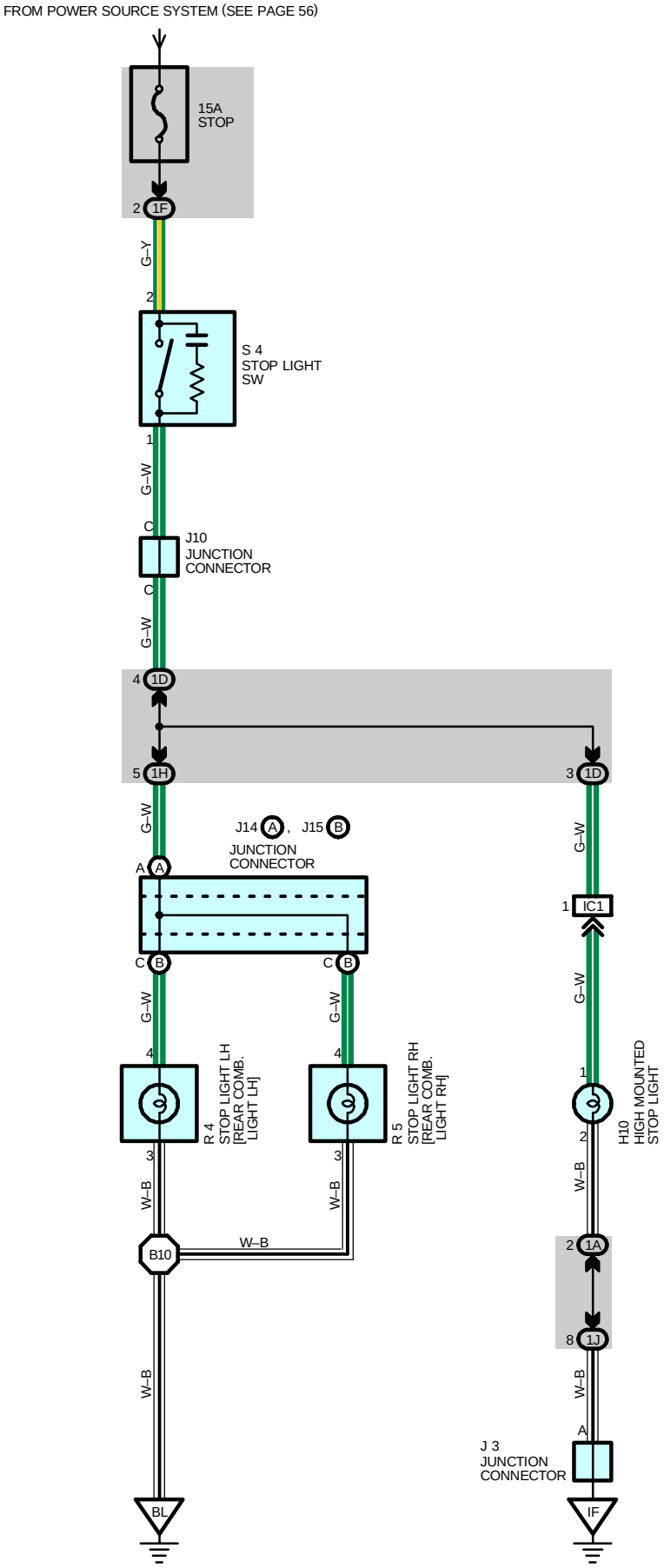
FROM POWER SOURCE SYSTEM (SEE PAGE 56)
15A
STOP
2
1F
G–Y
2
S 4
STOP LIGHT
SW
1
G–W
C
J10
JUNCTION
CONNECTOR
C
G–W
4
1D
5
1H
3
1D
G–W
J14
A
,
J15
B
JUNCTION
CONNECTOR
A
A
C
B
C
B
G–W
G–W
4
4
R 4
STOP LIGHT LH
[REAR COMB.
LIGHT LH]
R 5
STOP LIGHT RH
[REAR COMB.
LIGHT RH]
3
W–B
W–B
W–B
B10
W–B
W–B
BL
G–W
1
IC1
G–W
1
2
H10
HIGH MOUNTED
STOP LIGHT
W–B
2
1A
8
1J
W–B
A
J 3
JUNCTION
CONNECTOR
IF

SERVICE HINTS

S4 STOP LIGHT SW

2–1 : Closed with brake pedal depressed

: PARTS LOCATION

Code		See Page	Code		See Page	Code	See Page
H10		36 (Access Cab)	J14	A	37 (Standard Cab)	R5	36 (Access Cab)
		37 (Standard Cab)	J15	B	36 (Access Cab)		37 (Standard Cab)
J3		35			37 (Standard Cab)	S4	35
J10		35	R4		36 (Access Cab)		
J14	A	36 (Access Cab)			37 (Standard Cab)		

: JUNCTION BLOCK AND WIRE HARNESS CONNECTOR

Code	See Page	Junction Block and Wire Harness (Connector Location)
1A	22 (*2)	Roof Wire and Driver Side J/B (Lower Finish Panel)
	26 (*1)	
1D	22 (*2)	Cowl Wire and Driver Side J/B (Lower Finish Panel)
	26 (*1)	
1F	22 (*2)	
	26 (*1)	
1H	22 (*2)	
	26 (*1)	
1J	22 (*2)	
	26 (*1)	

: CONNECTOR JOINING WIRE HARNESS AND WIRE HARNESS

Code	See Page	Joining Wire Harness and Wire Harness (Connector Location)
IC1	44	Cowl Wire and Roof Wire (Left Side of Instrument Panel)

: GROUND POINTS

Code	See Page	Ground Points Location
IF	44	Left Kick Panel
BL	48 (Access Cab)	Surrounding of the Front of the Fuel Tank
	50 (Standard Cab)	

: SPLICE POINTS

Code	See Page	Wire Harness with Splice Points	Code	See Page	Wire Harness with Splice Points
B10	48 (Access Cab)	Frame Wire	B10	50 (Standard Cab)	Frame Wire

* 1 : w/ Daytime Running Light * 2 : w/o Daytime Running Light * 3 : Bench Seat * 4 : Separate Seat, Captain Seat (w/o Power Seat)

LIGHT AUTO TURN OFF (w/ DAYTIME RUNNING LIGHT)

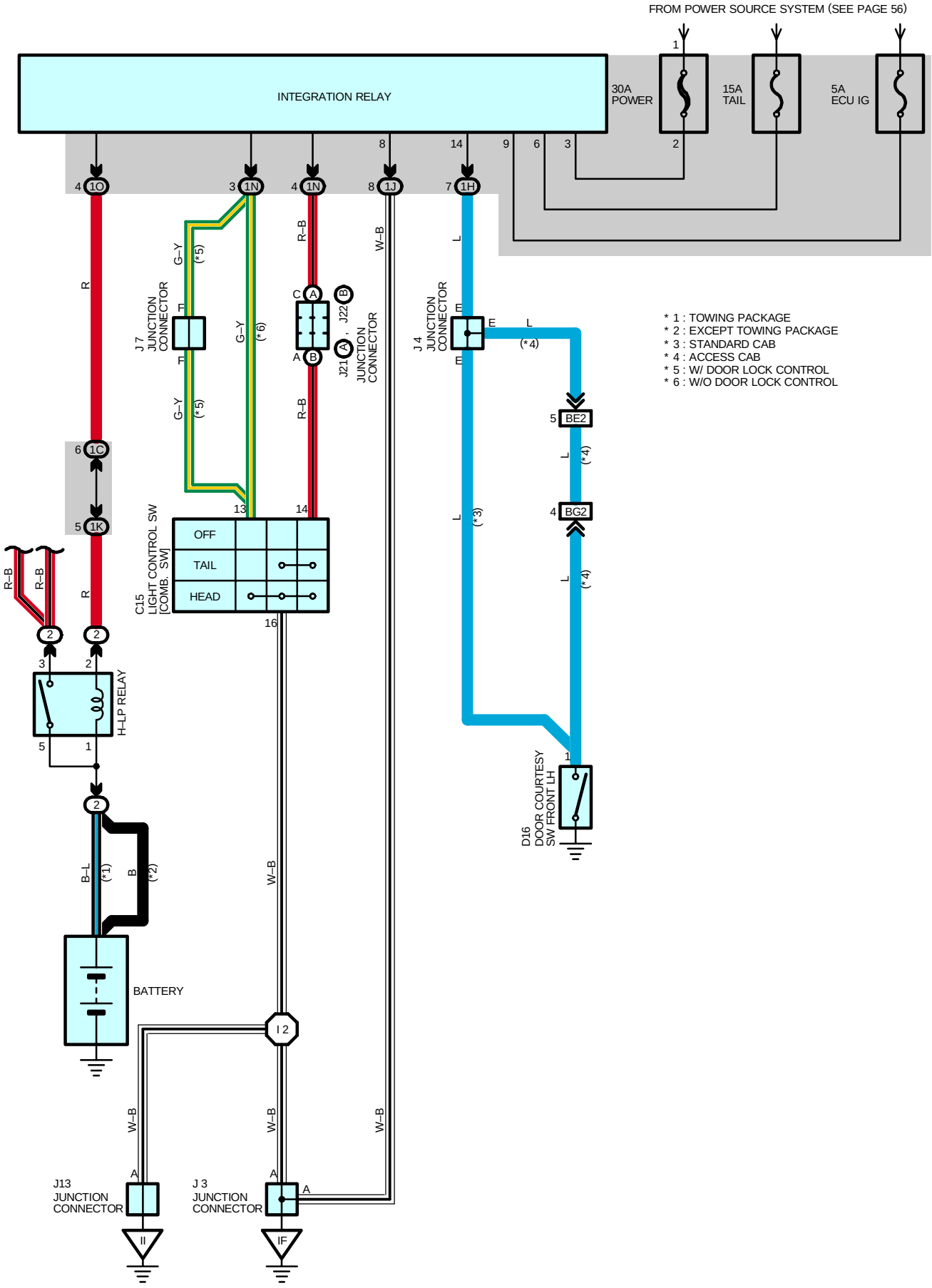

SYSTEM OUTLINE

With the ignition SW turned on, the current flows to TERMINAL 9 of the integration relay through ECU IG fuse.
Voltage is applied at all times to TERMINAL 6 of the integration relay through the TAIL fuse, and through the H–LP relay coil side.

1. NORMAL LIGHTING OPERATION

<Turn taillight on>
With the light control SW turned to TAIL position, a signal is input into the integration relay. Due to this signal, the current flowing to TERMINAL 6 of the relay flows to TERMINAL 14 of the light control SW to TERMINAL 16 to GROUND, and taillights to turn on.

<Turn headlight on>
With the light control SW turned to HEAD position, a signal is input into the integration relay. Due to this signal, the current flowing to the relay flows to TERMINAL 13 of the light control SW to TERMINAL 16 to GROUND in the headlight circuit, and causes taillight and H–LP relay to turn the lights on. The taillight circuit is same as above.

2. LIGHT AUTO TURN OFF OPERATION

With light on and ignition SW turned off (Input signal goes to TERMINAL 9 of the relay), when the driver's door is opened (Input signal goes to TERMINAL 14 of the relay), the relay operates and the current is cut off which flows from TERMINAL 6 and through the H–LP relay coil side of the relay to taillight circuit and headlight circuit.
As a result, all lights are turned off automatically.

SERVICE HINTS

H–LP RELAY

5–3 : Closed with the light control SW at **HEAD** position or the dimmer SW at **FLASH** position
Closed with the engine running and the parking brake lever released

C15 LIGHT CONTROL SW [COMB. SW]

13–16 : Closed with light control SW at **HEAD** position
14–16 : Closed with light control SW at **TAIL** or **HEAD** position

D16 DOOR COURTESY SW FRONT LH

1–GROUND : Continuity with the front LH door open

INTEGRATION RELAY

9–GROUND : Approx. **12** volts with the ignition SW at **ON** position
14–GROUND : Continuity with the front LH door open
3, 6–GROUND : Always approx. **12** volts
8–GROUND : Always continuity

: PARTS LOCATION

Code	See Page	Code	See Page	Code		See Page
C15	34	J3	35	J13		35
D16	36 (Access Cab)	J4	35	J21	A	35
	37 (Standard Cab)	J7	35	J22	B	35

: RELAY BLOCKS

Code	See Page	Relay Blocks (Relay Block Location)
2	21	Engine Room R/B (Engine Compartment Left)

: JUNCTION BLOCK AND WIRE HARNESS CONNECTOR

Code	See Page	Junction Block and Wire Harness (Connector Location)
1C	26 (*1)	Cowl Wire and Driver Side J/B (Lower Finish Panel)
1H		
1J		
1K	26 (*1)	Engine Room Main Wire and Driver Side J/B (Lower Finish Panel)
1N	27 (*1)	Cowl Wire and Driver Side J/B (Lower Finish Panel)
1O		

* 1 : w/ Daytime Running Light * 2 : w/o Daytime Running Light * 3 : Bench Seat * 4 : Separate Seat, Captain Seat (w/o Power Seat)

LIGHT AUTO TURN OFF (w/ DAYTIME RUNNING LIGHT)

: CONNECTOR JOINING WIRE HARNESS AND WIRE HARNESS

Code	See Page	Joining Wire Harness and Wire Harness (Connector Location)
BE2	48 (Access Cab)	Floor No.2 Wire and Cowl Wire (Center of Left Rocker Panel)
BG2	48 (Access Cab)	Floor No.2 Wire and Rear Door No.1 Wire LH (Under the Left Quarter Panel)

: GROUND POINTS

Code	See Page	Ground Points Location
IF	44	Left Kick Panel
II	44	Right Kick Panel

: SPLICE POINTS

Code	See Page	Wire Harness with Splice Points	Code	See Page	Wire Harness with Splice Points
I2	46	Cowl Wire			

LIGHT AUTO TURN OFF (w/o DAYTIME RUNNING LIGHT)

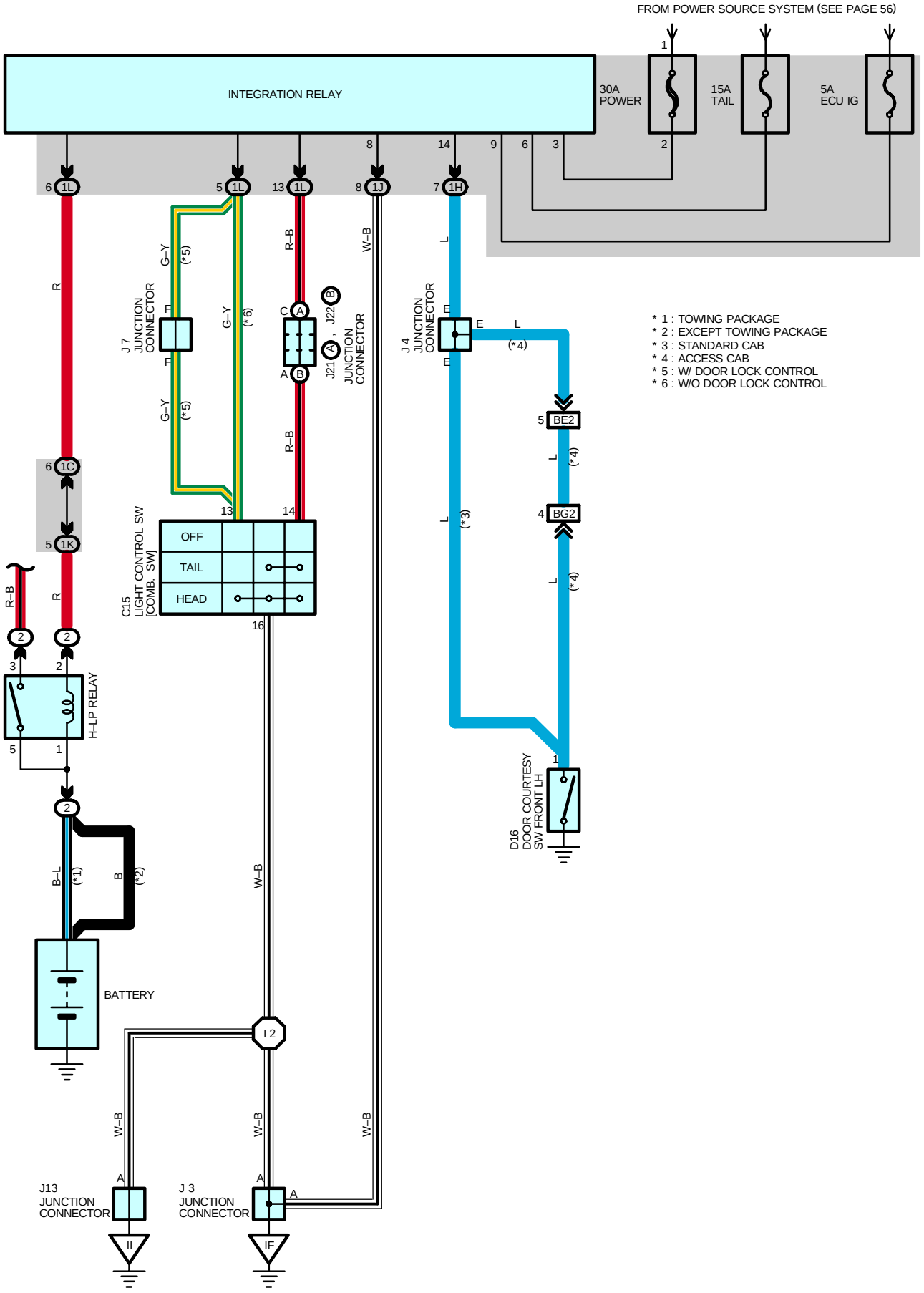

SYSTEM OUTLINE

With the ignition SW turned on, the current flows to TERMINAL 9 of the integration relay through ECU IG fuse.
Voltage is applied at all times to TERMINAL 6 of the integration relay through the TAIL fuse, and through the H–LP relay coil side.

1. NORMAL LIGHTING OPERATION

<Turn taillight on>
With the light control SW turned to TAIL position, a signal is input into the integration relay. Due to this signal, the current flowing to TERMINAL 6 of the relay flows to TERMINAL 14 of the light control SW to TERMINAL 16 to GROUND, and taillights to turn on.

<Turn headlight on>
With the light control SW turned to HEAD position, a signal is input into the integration relay. Due to this signal, the current flowing to the relay flows to TERMINAL 13 of the light control SW to TERMINAL 16 to GROUND in the headlight circuit, and causes taillight and H–LP relay to turn the lights on. The taillight circuit is same as above.

2. LIGHT AUTO TURN OFF OPERATION

With light on and ignition SW turned off (Input signal goes to TERMINAL 9 of the relay), when the driver's door is opened (Input signal goes to TERMINAL 14 of the relay), the relay operates and the current is cut off which flows from TERMINAL 6 and through the H–LP relay coil side of the relay to taillight circuit and headlight circuit.
As a result, all lights are turned off automatically.

SERVICE HINTS

H–LP RELAY

5–3 : Closed with the light control SW at **HEAD** position or the dimmer SW at **FLASH** position

C15 LIGHT CONTROL SW [COMB. SW]

13–16 : Closed with light control SW at **HEAD** position
14–16 : Closed with light control SW at **TAIL** or **HEAD** position

D16 DOOR COURTESY SW FRONT LH

1–GROUND : Continuity with the front LH door open

INTEGRATION RELAY

9–GROUND : Approx. **12** volts with the ignition SW at **ON** position
14–GROUND : Continuity with the front LH door open
3, 6–GROUND : Always approx. **12** volts
8–GROUND : Always continuity

: PARTS LOCATION

Code	See Page	Code	See Page	Code		See Page
C15	34	J3	35	J13		35
D16	36 (Access Cab)	J4	35	J21	A	35
	37 (Standard Cab)	J7	35	J22	B	35

: RELAY BLOCKS

Code	See Page	Relay Blocks (Relay Block Location)
2	21	Engine Room R/B (Engine Compartment Left)

: JUNCTION BLOCK AND WIRE HARNESS CONNECTOR

Code	See Page	Junction Block and Wire Harness (Connector Location)
1C	22 (*2)	Cowl Wire and Driver Side J/B (Lower Finish Panel)
1H		
1J		
1K	22 (*2)	Engine Room Main Wire and Driver Side J/B (Lower Finish Panel)
1L	23 (*2)	Cowl Wire and Driver Side J/B (Lower Finish Panel)

* 1 : w/ Daytime Running Light * 2 : w/o Daytime Running Light * 3 : Bench Seat * 4 : Separate Seat, Captain Seat (w/o Power Seat)

LIGHT AUTO TURN OFF (w/o DAYTIME RUNNING LIGHT)

: CONNECTOR JOINING WIRE HARNESS AND WIRE HARNESS

Code	See Page	Joining Wire Harness and Wire Harness (Connector Location)
BE2	48 (Access Cab)	Floor No.2 Wire and Cowl Wire (Center of Left Rocker Panel)
BG2	48 (Access Cab)	Floor No.2 Wire and Rear Door No.1 Wire LH (Under the Left Quarter Panel)

: GROUND POINTS

Code	See Page	Ground Points Location
IF	44	Left Kick Panel
II	44	Right Kick Panel

: SPLICE POINTS

Code	See Page	Wire Harness with Splice Points	Code	See Page	Wire Harness with Splice Points
I2	46	Cowl Wire			

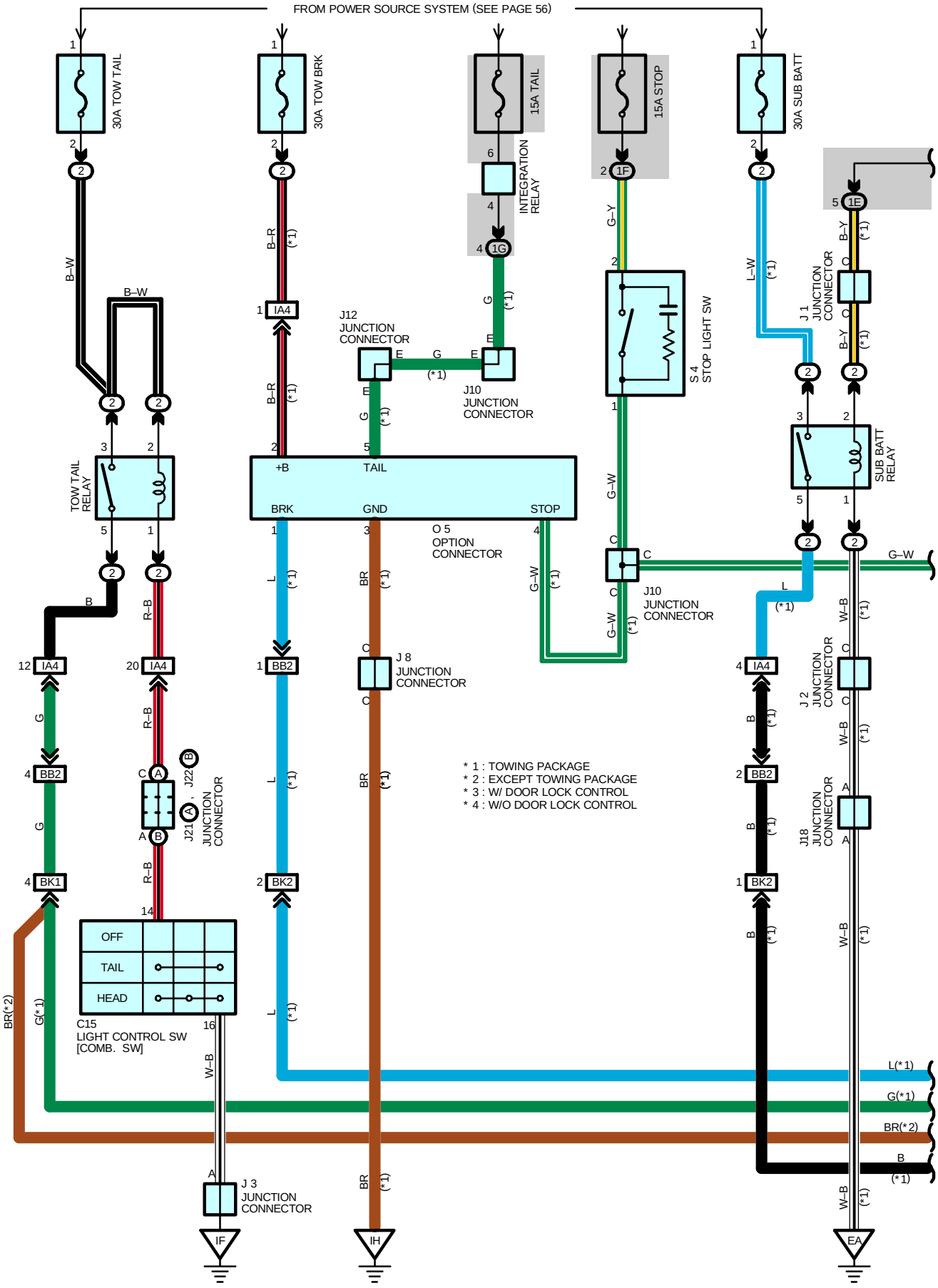
FROM POWER SOURCE SYSTEM (SEE PAGE 56)
30A TOW TAIL
30A TOW BRK
15A TAIL
15A STOP
30A SUB BATT
INTEGRATION RELAY
TOW TAIL RELAY
SUB BATT RELAY
S 4 STOP LIGHT SW
J12 JUNCTION CONNECTOR
J10 JUNCTION CONNECTOR
J 1 JUNCTION CONNECTOR
J 2 JUNCTION CONNECTOR
J 8 JUNCTION CONNECTOR
J18 JUNCTION CONNECTOR
J21 , J22 JUNCTION CONNECTOR
O 5 OPTION CONNECTOR
+B
TAIL
BRK
GND
STOP
C15 LIGHT CONTROL SW [COMB. SW]
OFF
TAIL
HEAD
J 3 JUNCTION CONNECTOR
IF
IH
EA
* 1 : TOWING PACKAGE
* 2 : EXCEPT TOWING PACKAGE
* 3 : W/ DOOR LOCK CONTROL
* 4 : W/O DOOR LOCK CONTROL

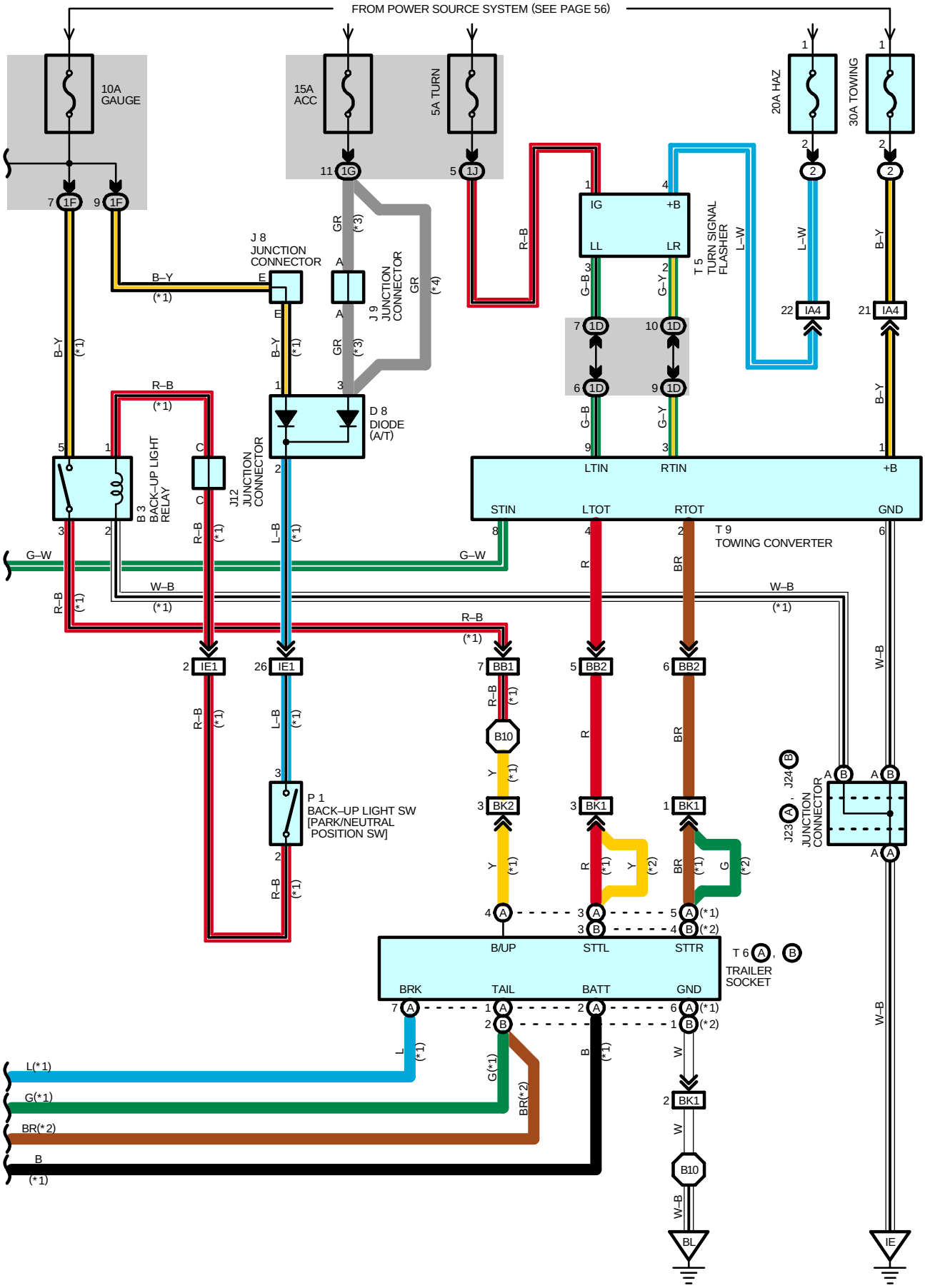
FROM POWER SOURCE SYSTEM (SEE PAGE 56)
10A GAUGE
15A ACC
5A TURN
20A HAZ
30A TOWING
J 8 JUNCTION CONNECTOR
J 9 JUNCTION CONNECTOR
T 5 TURN SIGNAL FLASHER
D 8 DIODE (A/T)
B 3 BACK–UP LIGHT RELAY
J12 JUNCTION CONNECTOR
T 9 TOWING CONVERTER
P 1 BACK–UP LIGHT SW [PARK/NEUTRAL POSITION SW]
J23 , J24 JUNCTION CONNECTOR
T 6 TRAILER SOCKET
IG
+B
LL
LR
LTIN
RTIN
STIN
LTOT
RTOT
GND
B/UP
STTL
STTR
BRK
TAIL
BATT
L(*1)
G(*1)
BR(*2)
B (*1)

TRAILER TOWING

SERVICE HINTS

T9 TOWING CONVERTER

1–GROUND : Always approx. **12** volts

6–GROUND : Always continuity

: PARTS LOCATION

Code	See Page	Code	See Page	Code	See Page
B3	34	J10	35	P1	33 (5VZ–FE)
C15	34	J12	35	S4	35
D8	34	J18	31 (2UZ–FE)	T5	35
J1	31 (2UZ–FE)		33 (5VZ–FE)	T6 A	36 (Access Cab)
	33 (5VZ–FE)	J21 A	35		37 (Standard Cab)
J2	31 (2UZ–FE)	J22 B	35	T6 B	36 (Access Cab)
	33 (5VZ–FE)	J23 A	35		37 (Standard Cab)
J3	35	J24 B	35	T9	35
J8	35	O5	35		
J9	35	P1	31 (2UZ–FE)		

: RELAY BLOCKS

Code	See Page	Relay Blocks (Relay Block Location)
2	21	Engine Room R/B (Engine Compartment Left)

: JUNCTION BLOCK AND WIRE HARNESS CONNECTOR

Code	See Page	Junction Block and Wire Harness (Connector Location)
1D	22 (*2)	Cowl Wire and Driver Side J/B (Lower Finish Panel)
	26 (*1)	
1E	22 (*2)	Engine Room Main Wire and Driver Side J/B (Lower Finish Panel)
	26 (*1)	
1F	22 (*2)	Cowl Wire and Driver Side J/B (Lower Finish Panel)
	26 (*1)	
1G	22 (*2)	
	26 (*1)	
1J	22 (*2)	
	26 (*1)	

: CONNECTOR JOINING WIRE HARNESS AND WIRE HARNESS

Code	See Page	Joining Wire Harness and Wire Harness (Connector Location)
IA4	44	Engine Room Main Wire and Cowl Wire (Left Kick Panel)
IE1	46	Engine Wire and Cowl Wire (Right Side of Instrument Panel)
BB1	48 (Access Cab)	Frame Wire and Cowl Wire (Under the Driver's Seat)
	50 (Standard Cab)	
BB2	48 (Access Cab)	
	50 (Standard Cab)	
BK1	48 (Access Cab)	Frame Wire and Frame No.3 Wire (Near the License Plate Light)
	50 (Standard Cab)	
BK2	48 (Access Cab)	
	50 (Standard Cab)	

* 1 : w/ Daytime Running Light * 2 : w/o Daytime Running Light * 3 : Bench Seat * 4 : Separate Seat, Captain Seat (w/o Power Seat)



: GROUND POINTS

Code	See Page	Ground Points Location
EA	40 (2UZ–FE) 42 (5VZ–FE)	Front Left Fender
IE	44	Left Kick Panel
IF		
IH	44	Right Kick Panel
BL	48 (Access Cab) 50 (Standard Cab)	Surrounding of the Front of the Fuel Tank



: SPLICE POINTS

Code	See Page	Wire Harness with Splice Points	Code	See Page	Wire Harness with Splice Points
B10	48 (Access Cab)	Frame Wire	B10	50 (Standard Cab)	Frame Wire

CARGO LIGHT

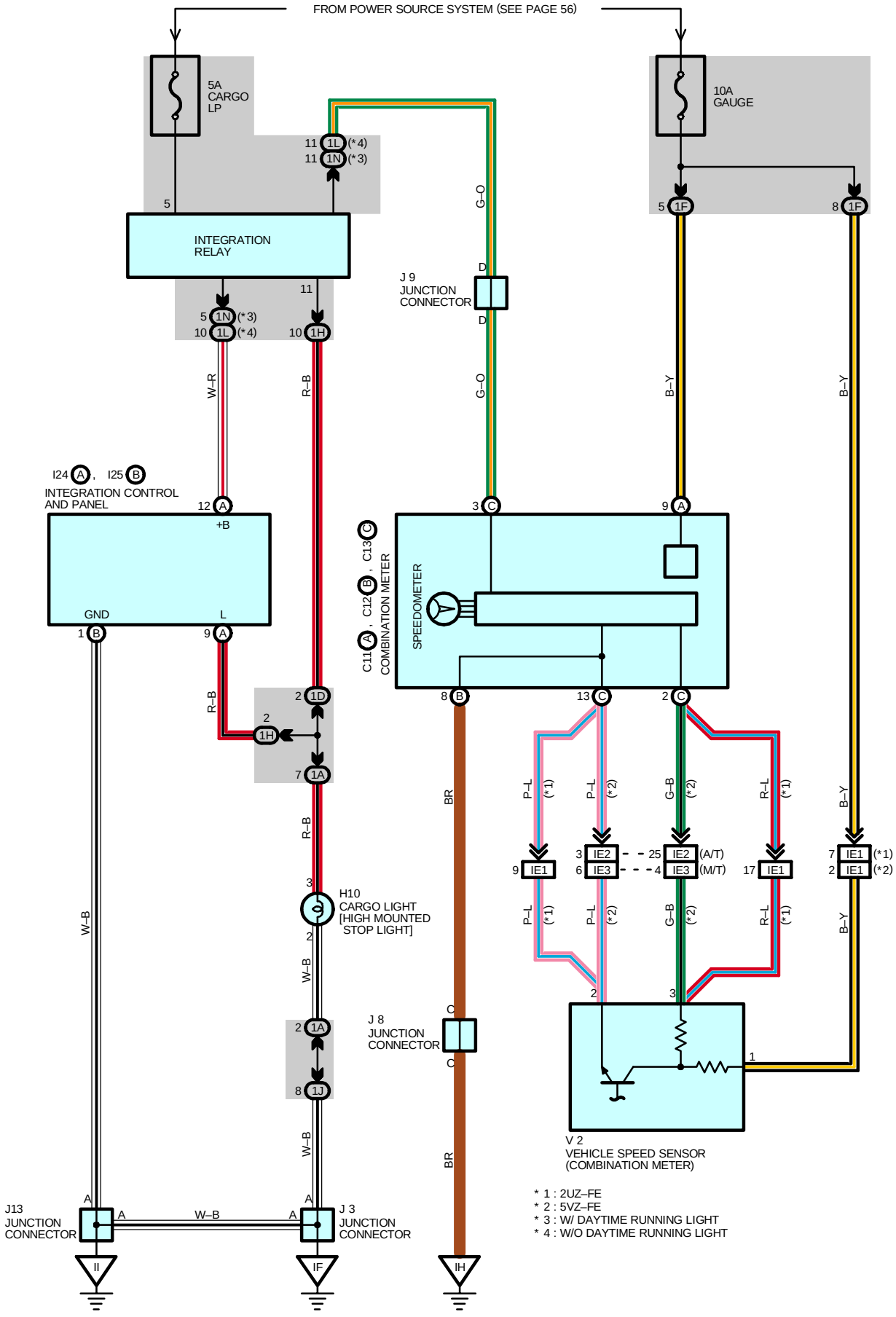
FROM POWER SOURCE SYSTEM (SEE PAGE 56)
5A CARGO LP
10A GAUGE
INTEGRATION RELAY
J 9 JUNCTION CONNECTOR
I24 A , I25 B
INTEGRATION CONTROL AND PANEL
+B
GND
L
SPEEDOMETER
C11 A , C12 B , C13 C
COMBINATION METER
H10 CARGO LIGHT [HIGH MOUNTED STOP LIGHT]
J 8 JUNCTION CONNECTOR
J13 JUNCTION CONNECTOR
J 3 JUNCTION CONNECTOR
V 2 VEHICLE SPEED SENSOR (COMBINATION METER)
W–B
W–R
R–B
G–O
B–Y
BR
P–L
G–B
R–L
IE1
IE2
IE3
(A/T)
(M/T)
* 1 : 2UZ–FE
* 2 : 5VZ–FE
* 3 : W/ DAYTIME RUNNING LIGHT
* 4 : W/O DAYTIME RUNNING LIGHT

SERVICE HINTS

I24 (A), I25 (B) INTEGRATION CONTROL AND PANEL

(B) 1–GROUND : Always continuity

(A)12–GROUND : Always. approx. **12** volts

: PARTS LOCATION

Code		See Page	Code		See Page	Code	See Page
C11	A	34	I24	A	35	J13	35
C12	B	34	I25	B	35	V2	31 (2UZ–FE)
C13	C	34	J3		35		33 (5VZ–FE)
H10		36 (Access Cab)	J8		35		
		37 (Standard Cab)	J9		35		

: JUNCTION BLOCK AND WIRE HARNESS CONNECTOR

Code	See Page	Junction Block and Wire Harness (Connector Location)
1A	22 (*2)	Roof Wire and Driver Side J/B (Lower Finish Panel)
	26 (*1)	
1D	22 (*2)	Cowl Wire and Driver Side J/B (Lower Finish Panel)
	26 (*1)	
1F	22 (*2)	
	26 (*1)	
1H	22 (*2)	
	26 (*1)	
1J	22 (*2)	
	26 (*1)	
1L	23 (*2)	
1N	27 (*1)	

: CONNECTOR JOINING WIRE HARNESS AND WIRE HARNESS

Code	See Page	Joining Wire Harness and Wire Harness (Connector Location)
IE1	46	Engine Wire and Cowl Wire (Right Side of Instrument Panel)
IE2		
IE3		

: GROUND POINTS

Code	See Page	Ground Points Location
IF	44	Left Kick Panel
IH	44	Right Kick Panel
II		

* 1 : w/ Daytime Running Light * 2 : w/o Daytime Running Light * 3 : Bench Seat * 4 : Separate Seat, Captain Seat (w/o Power Seat)

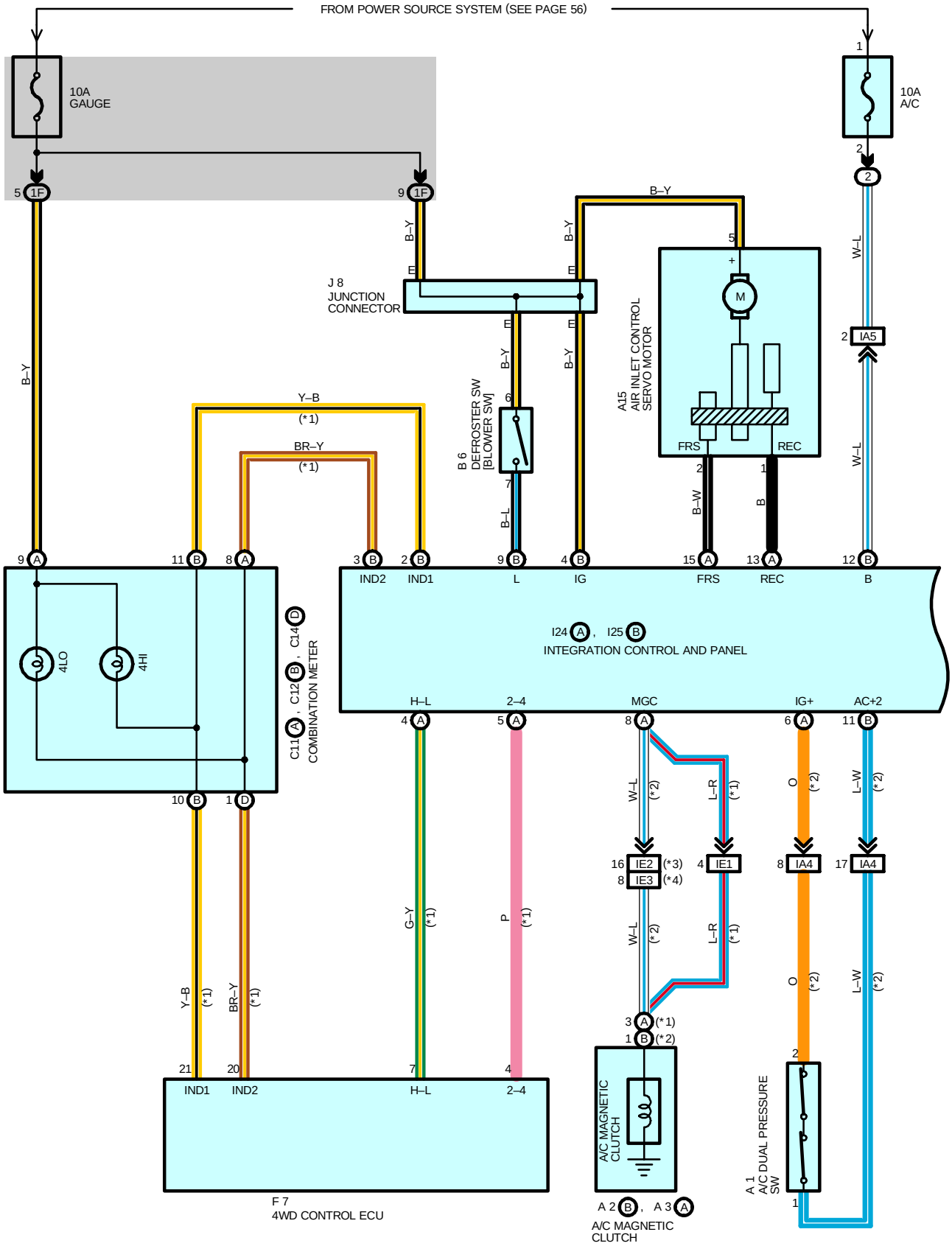
FROM POWER SOURCE SYSTEM (SEE PAGE 56)
10A GAUGE
10A A/C
J 8 JUNCTION CONNECTOR
B 6 DEFROSTER SW [BLOWER SW]
A15 AIR INLET CONTROL SERVO MOTOR
FRS
REC
IA5
IA4
IE1
IE2
IE3
4LO
4HI
C11, C12, C14
COMBINATION METER
I24, I25
INTEGRATION CONTROL AND PANEL
IND2
IND1
L
IG
FRS
REC
B
H–L
2–4
MGC
IG+
AC+2
F 7
4WD CONTROL ECU
A/C MAGNETIC CLUTCH
A 2, A 3
A/C MAGNETIC CLUTCH
A 1
A/C DUAL PRESSURE SW
B–Y
Y–B
BR–Y
G–Y
P
W–L
L–R
B–W
B
O
L–W
(*1)
(*2)
(*3)
(*4)

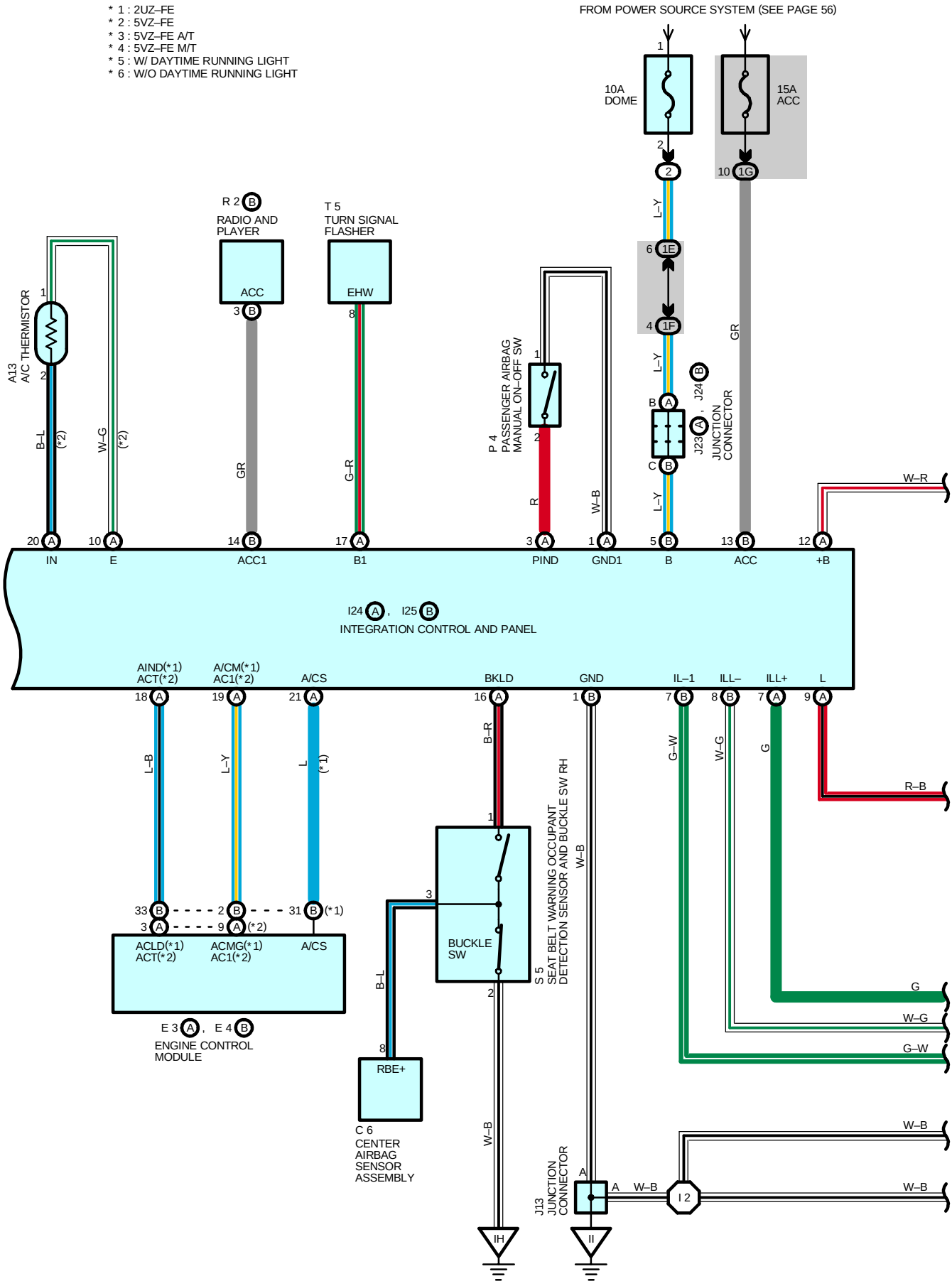
* 1 : 2UZ–FE
* 2 : 5VZ–FE
* 3 : 5VZ–FE A/T
* 4 : 5VZ–FE M/T
* 5 : W/ DAYTIME RUNNING LIGHT
* 6 : W/O DAYTIME RUNNING LIGHT
FROM POWER SOURCE SYSTEM (SEE PAGE 56)
10A DOME
15A ACC
R 2 RADIO AND PLAYER
T 5 TURN SIGNAL FLASHER
A13 A/C THERMISTOR
P 4 PASSENGER AIRBAG MANUAL ON–OFF SW
J23 , J24 JUNCTION CONNECTOR
I24 , I25 INTEGRATION CONTROL AND PANEL
IN
E
ACC1
B1
PIND
GND1
B
ACC
+B
AIND(*1) ACT(*2)
A/CM(*1) AC1(*2)
A/CS
BKLD
GND
IL–1
ILL–
ILL+
L
E 3 , E 4 ENGINE CONTROL MODULE
ACLD(*1) ACT(*2)
ACMG(*1) AC1(*2)
BUCKLE SW
S 5 SEAT BELT WARNING OCCUPANT DETECTION SENSOR AND BUCKLE SW RH
C 6 CENTER AIRBAG SENSOR ASSEMBLY
RBE+
J13 JUNCTION CONNECTOR
I 2
IH
II

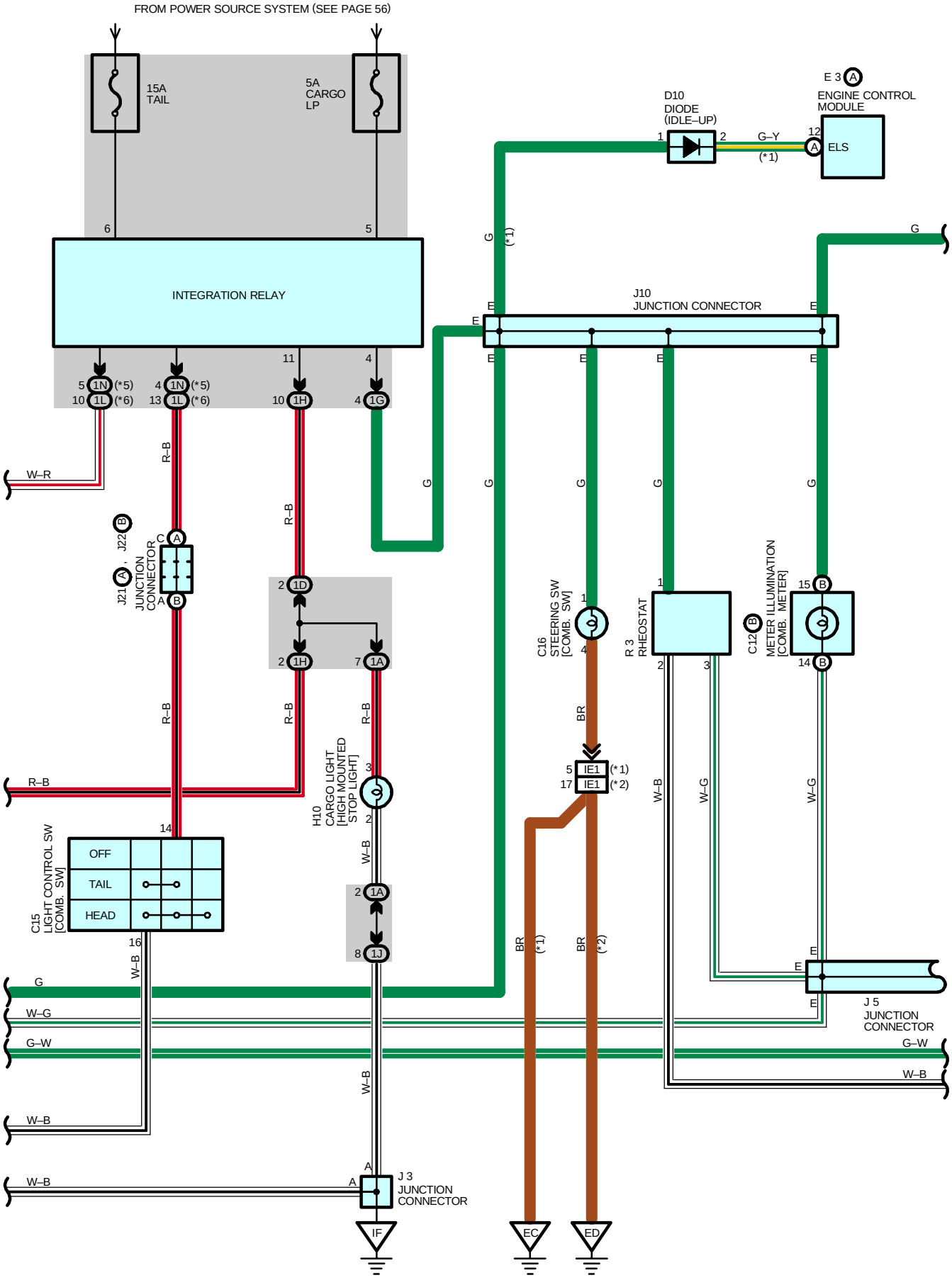
FROM POWER SOURCE SYSTEM (SEE PAGE 56)
15A
TAIL
5A
CARGO
LP
INTEGRATION RELAY
D10
DIODE
(IDLE–UP)
G–Y
(*1)
E 3
ENGINE CONTROL
MODULE
ELS
J10
JUNCTION CONNECTOR
W–R
R–B
G
J22
J21
JUNCTION
CONNECTOR
C16
STEERING SW
[COMB. SW]
R 3
RHEOSTAT
C12
METER ILLUMINATION
[COMB. METER]
H10
CARGO LIGHT
[HIGH MOUNTED
STOP LIGHT]
C15
LIGHT CONTROL SW
[COMB. SW]
OFF
TAIL
HEAD
BR
W–B
W–G
G–W
IE1
(*1)
(*2)
J 5
JUNCTION
CONNECTOR
J 3
JUNCTION
CONNECTOR
IF
EC
ED

* 1 : 2UZ–FE
* 2 : 5VZ–FE
* 5 : W/ DAYTIME RUNNING LIGHT
* 6 : W/O DAYTIME RUNNING LIGHT

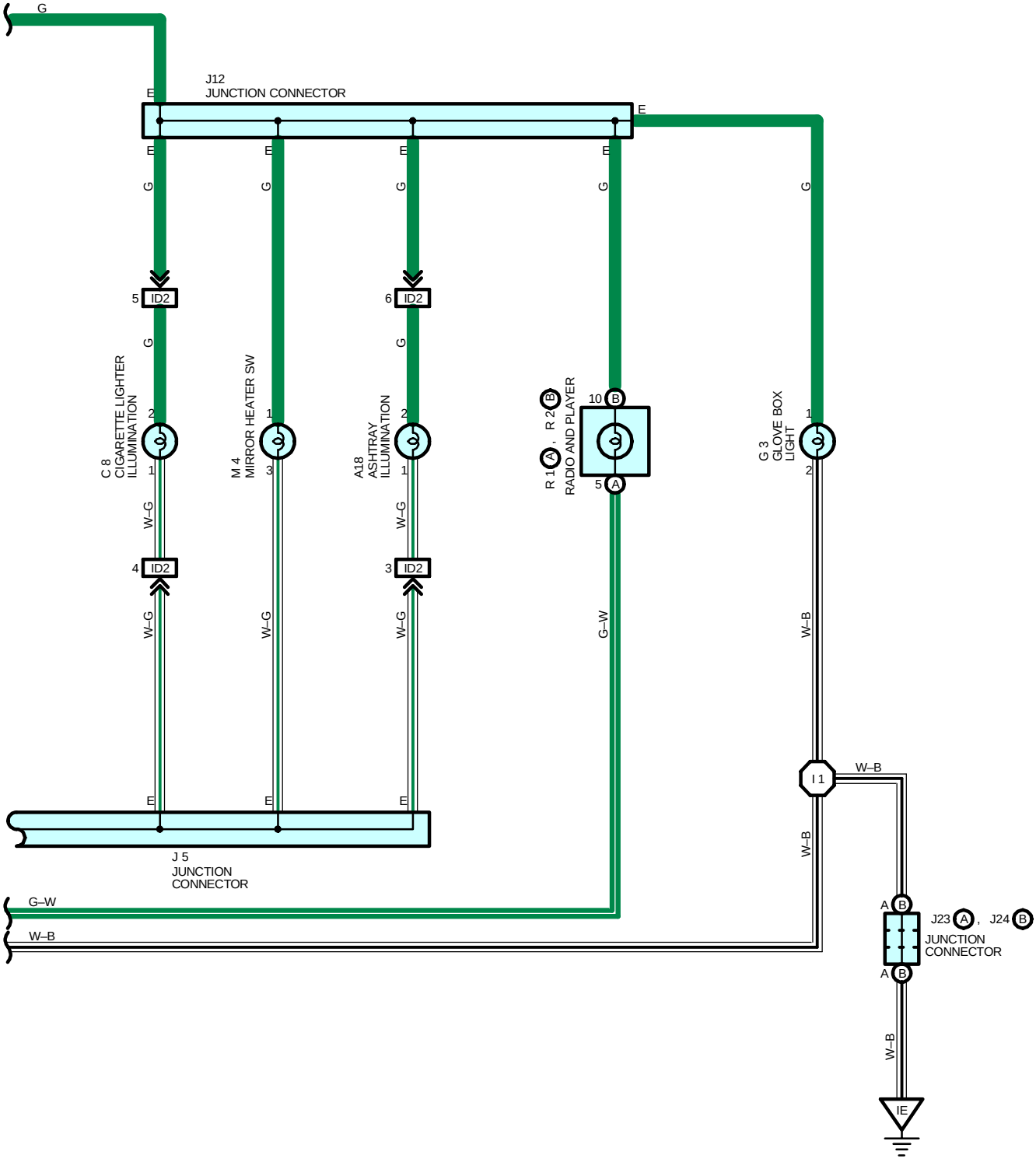

INTEGRATION CONTROL AND PANEL

SYSTEM OUTLINE

The integration control panel is composed by design components such as the cluster, resistor, heater control panel, and SW. The integration control panel controls systems such as the air conditioning, cargo light, 4WD (2UZ–FE) and hazard warning light, clock, and the SRS.

SERVICE HINTS

I24 (A), I25 (B) INTEGRATION CONTROL AND PANEL

(B)12–GROUND : Approx. **12** volts with ignition SW on and blower SW on
(B) 4–GROUND : Approx. **12** volts with ignition SW at **ON** or **ST** position
(B) 5–GROUND : Always approx. **12** volts
(B)13–GROUND : Approx. **12** volts with ignition SW at **ACC** or **ON** position
(B) 1–GROUND : Always continuity

: PARTS LOCATION

Code	See Page	Code	See Page	Code	See Page
A1	30 (2UZ–FE)	C16	34	J12	35
	32 (5VZ–FE)	D10	34	J13	35
A2 B	32 (5VZ–FE)	E3 A	34	J21 A	35
A3 A	30 (2UZ–FE)	E4 B	34	J22 B	35
A13	34	F7	35	J23 A	35
A15	34	G3	35	J24 B	35
A18	34	H10	36 (Access Cab)	M4	35
B6	34		37 (Standard Cab)	P4	35
C6	34	I24 A	35	R1 A	35
C8	34	I25 B	35	R2 B	35
C11 A	34	J3	35	R3	35
C12 B	34	J5	35	S5	36 (Access Cab)
C14 D	34	J8	35		37 (Standard Cab)
C15	34	J10	35	T5	35

: RELAY BLOCKS

Code	See Page	Relay Blocks (Relay Block Location)
2	21	Engine Room R/B (Engine Compartment Left)

: JUNCTION BLOCK AND WIRE HARNESS CONNECTOR

Code	See Page	Junction Block and Wire Harness (Connector Location)
1A	22 (*2) 26 (*1)	Roof Wire and Driver Side J/B (Lower Finish Panel)
1D	22 (*2) 26 (*1)	Cowl Wire and Driver Side J/B (Lower Finish Panel)
1E	22 (*2) 26 (*1)	Engine Room Main Wire and Driver Side J/B (Lower Finish Panel)
1F	22 (*2) 26 (*1)	Cowl Wire and Driver Side J/B (Lower Finish Panel)
1G	22 (*2) 26 (*1)	
1H	22 (*2) 26 (*1)	
1J	22 (*2) 26 (*1)	
1L	23 (*2)	
1N	27 (*1)	

* 1 : w/ Daytime Running Light * 2 : w/o Daytime Running Light * 3 : Bench Seat * 4 : Separate Seat, Captain Seat (w/o Power Seat)

: CONNECTOR JOINING WIRE HARNESS AND WIRE HARNESS

Code	See Page	Joining Wire Harness and Wire Harness (Connector Location)
IA4	44	Engine Room Main Wire and Cowl Wire (Left Kick Panel)
IA5		
ID2	46	Cigarette Lighter Wire and Cowl Wire (Instrument Panel Brace LH)
IE1	46	Engine Wire and Cowl Wire (Right Side of Instrument Panel)
IE2		
IE3		

: GROUND POINTS

Code	See Page	Ground Points Location
EC	40 (2UZ–FE)	Rear Bank of Left Cylinder Head
ED	42 (5VZ–FE)	Intake Manifold Left
IE	44	Left Kick Panel
IF		
IH	44	Right Kick Panel
II		

: SPLICE POINTS

Code	See Page	Wire Harness with Splice Points	Code	See Page	Wire Harness with Splice Points
I1	46	Cowl Wire	I2	46	Cowl Wire

ELECTRONICALLY CONTROLLED TRANSMISSION AND A/T INDICATOR

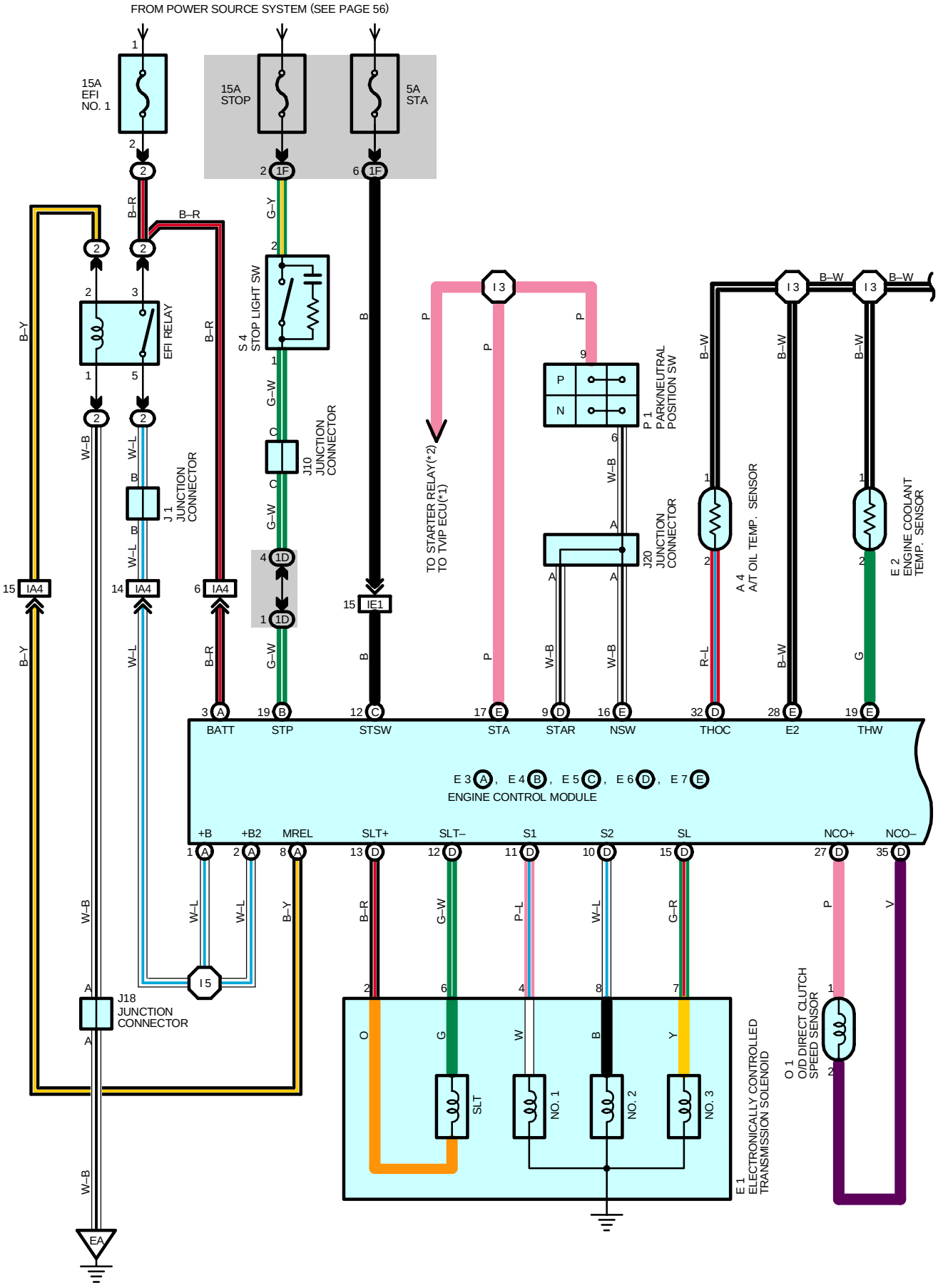

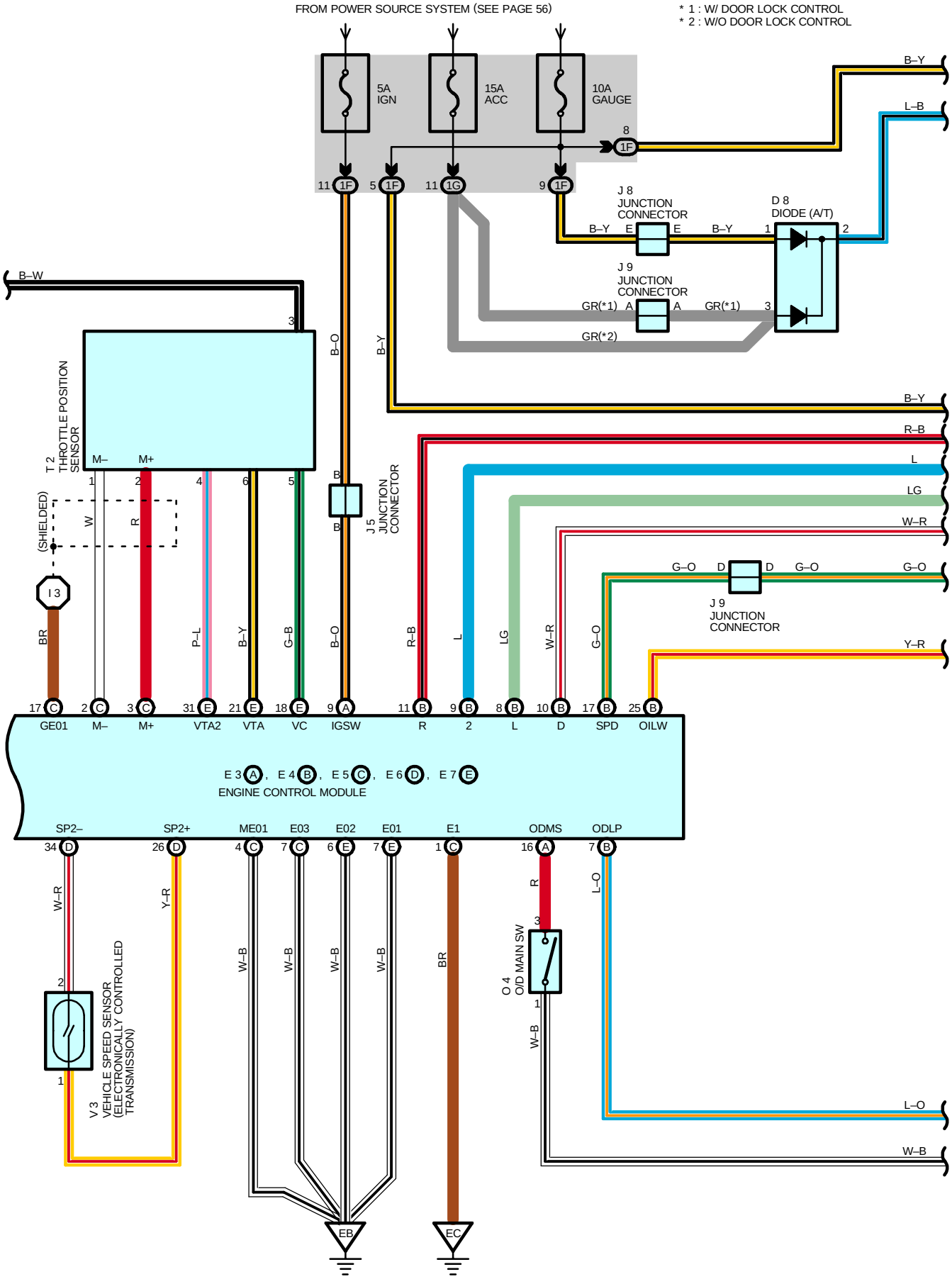
FROM POWER SOURCE SYSTEM (SEE PAGE 56)
* 1 : W/ DOOR LOCK CONTROL
* 2 : W/O DOOR LOCK CONTROL
5A IGN
15A ACC
10A GAUGE
J 8 JUNCTION CONNECTOR
D 8 DIODE (A/T)
J 9 JUNCTION CONNECTOR
J 9 JUNCTION CONNECTOR
T 2 THROTTLE POSITION SENSOR
(SHIELDED)
J 5 JUNCTION CONNECTOR
I 3
M– M+
GE01 M– M+ VTA2 VTA VC IGSW R 2 L D SPD OILW
E 3 , E 4 , E 5 , E 6 , E 7
ENGINE CONTROL MODULE
SP2– SP2+ ME01 E03 E02 E01 E1 ODMS ODLP
V 3 VEHICLE SPEED SENSOR (ELECTRONICALLY CONTROLLED TRANSMISSION)
O 4 O/D MAIN SW
EB
EC
B–Y
L–B
B–W
B–O
R–B
L
LG
W–R
G–O
Y–R
P–L
G–B
BR
W
R
W–B
L–O

ELECTRONICALLY CONTROLLED TRANSMISSION AND A/T INDICATOR

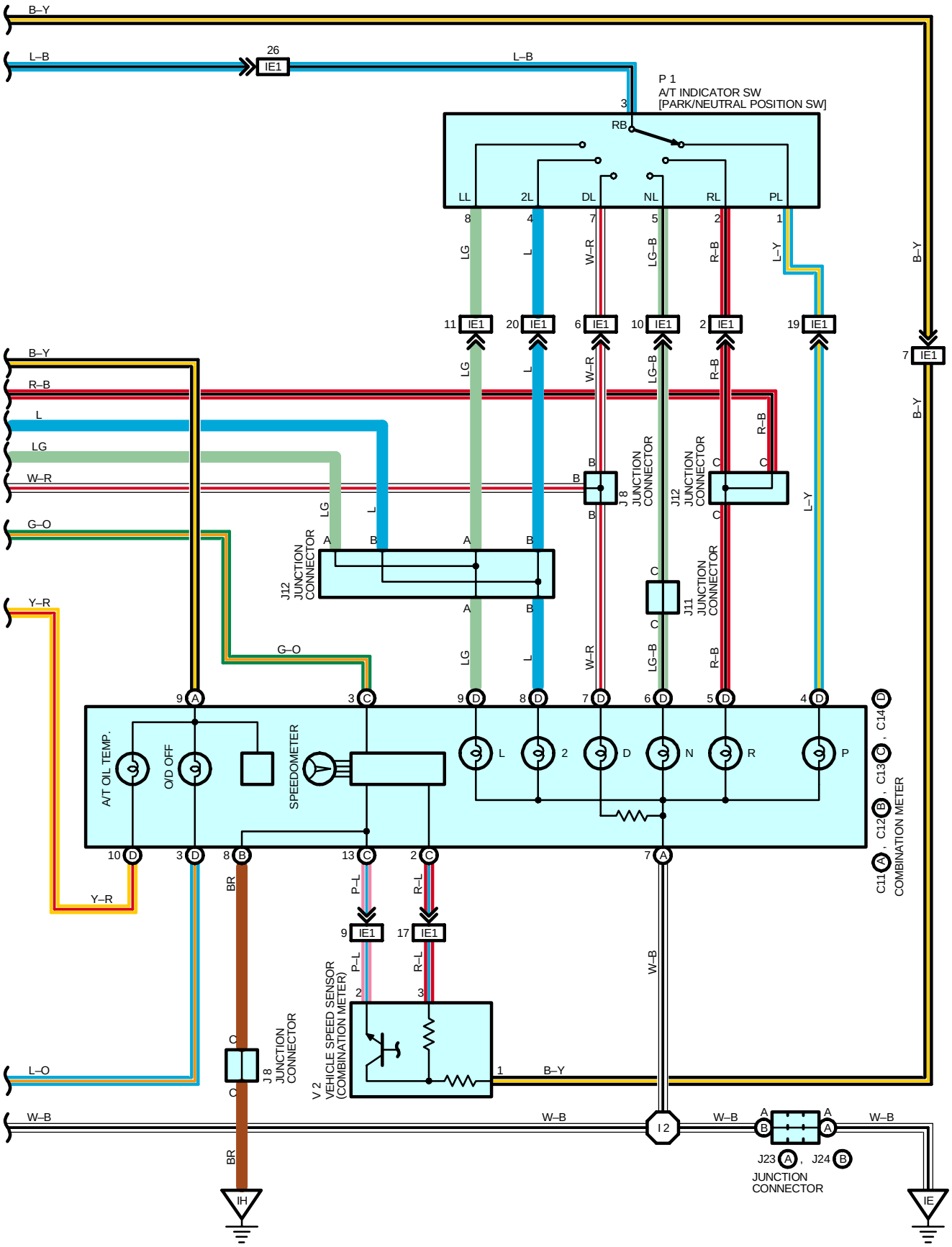

SYSTEM OUTLINE

The electronically controlled transmission electrically controls the, throttle pressure, lock–up pressure, and accumulator pressure etc. through the solenoid valve.
The electronically controlled transmission is a system which precisely controls the gear shift timing and lock–up timing in response to the vehicle's driving conditions and the engine condition detected by various sensors. It makes smooth driving possible by shift selection of the gear which is the most appropriate to the driving conditions at that time, and by preventing downing, squat and gear shift shock when starting off.

1. GEAR SHIFT OPERATION

When driving, the engine warm up condition is input as a control signal from the engine coolant temp. sensor to TERMINAL THW of the engine control module, and the vehicle speed is input to TERMINAL SP2+ of the engine control module from the vehicle speed sensor. At the same time, the throttle valve opening signal from the throttle position sensor is input to TERMINALS VTA, VTA2 of the engine control module as a throttle angle signal. Based on these signals, the engine control module selects the best shift position for the driving conditions and sends current to the electronically controlled transmission solenoid.

2. LOCK–UP OPERATION

When the engine control module decides based on each signal that the lock–up condition has been met, the current flows from the engine control module TERMINAL SL to TERMINAL 7 of the electronically controlled transmission solenoid to GROUND.

3. STOP LIGHT SW CIRCUIT

If the brake pedal is depressed (Stop light SW on) when driving in lock–up position, a signal is input to TERMINAL STP of the engine control module. As a result, the engine control module cuts the current to the solenoid to release the lock–up.

4. OVERDRIVE CIRCUIT

∗ O/D main SW on
When the O/D main SW is switched to ON position, a signal is input to TERMINAL ODMS of the engine control module, and enables shift change to the overdrive range, through the control of the engine control module.

∗ O/D main SW off
When the O/D main SW is switched to OFF position, a signal is input to TERMINAL ODMS of the engine control module, and prohibits shift change to the overdrive range through the control of the engine control module. When in the overdrive range already, shift down is made.

ELECTRONICALLY CONTROLLED TRANSMISSION AND A/T INDICATOR

SERVICE HINTS

E1 ELECTRONICALLY CONTROLLED TRANSMISSION SOLENOID

4, 7, 8-GROUND : Approx. **13** Ω

O4 O/D MAIN SW

3–1 : Open with O/D main SW at **ON** position
Closed with O/D main SW at **OFF** position

S4 STOP LIGHT SW

1–2 : Closed with brake pedal depressed

E3(A), E4 (B), E5 (C), E6 (D), E7 (E) ENGINE CONTROL MODULE

S1-E1 : **9**-**14** volts with vehicle not move and shift lever in **D** position
S2,SL-E1 : **0**-**1.5** volts with vehicle not move
STP–E1 : **7.5**–**14** volts with brake pedal depressed
: **0**–**1.5** volts with brake pedal released
THW–E1 : **0.2**–**1.0** volts with idling, engine coolant temp. **60**˚C (**140**˚F)–**120**˚C (**248**˚F)
THOC–E1 : Below **1.0** volts with fluid temp. **110**˚C (**230**˚F)
VTA–E1 : **0.4**–**1.0** volts with ignition SW on and throttle valve fully closed
: **3.2**–**4.8** volts with ignition SW on and throttle valve fully open
VC–E1 : **4.5**–**5.5** volts with ignition SW at **ON** or **ST** position
ODMS–E1 : **9**–**14** volts with O/D main SW turned on
: **0**–**3** volts with O/D main SW turned off
SPD–E1 : Pulse generation with vehicle moving
2–E1 : **7.5**–**14** volts with shift lever at **2** position
: **0**–**1.5** volts with shift lever at except **2** position
L–E1 : **7.5**–**14** volts with shift lever at **L** position
: **0**–**1.5** volts with shift lever at except **L** position
+B–E1 : **9**–**14** volts with ignition SW at **ON** or **ST** position
BATT–E1 : Always **9**–**14** volts

P1 A/T INDICATOR SW [PARK/NEUTRAL POSITION SW]

3–1 : Closed with shift lever in **P** position
3–2 : Closed with shift lever in **R** position
3–5 : Closed with shift lever in **N** position
3–7 : Closed with shift lever in **D** position
3–4 : Closed with shift lever in **2** position
3–8 : Closed with shift lever in **L** position

: PARTS LOCATION

Code		See Page	Code		See Page	Code		See Page
A4		30 (2UZ–FE)	E6	D	34	J23	A	35
C11	A	34	E7	E	34	J24	B	35
C12	B	34	J1		31 (2UZ–FE)	O1		31 (2UZ–FE)
C13	C	34	J5		35	O4		35
C14	D	34	J8		35	P1		31 (2UZ–FE)
D8		34	J9		35	S4		35
E1		30 (2UZ–FE)	J10		35	T2		31 (2UZ–FE)
E2		30 (2UZ–FE)	J11		35	V2		31 (2UZ–FE)
E3	A	34	J12		35	V3		31 (2UZ–FE)
E4	B	34	J18		31 (2UZ–FE)			
E5	C	34	J20		35			

: RELAY BLOCKS

Code	See Page	Relay Blocks (Relay Block Location)
2	21	Engine Room R/B (Engine Compartment Left)



: JUNCTION BLOCK AND WIRE HARNESS CONNECTOR

Code	See Page	Junction Block and Wire Harness (Connector Location)
1D	22 (*2)	Cowl Wire and Driver Side J/B (Lower Finish Panel)
	26 (*1)	
1F	22 (*2)	
	26 (*1)	
1G	22 (*2)	
	26 (*1)	



: CONNECTOR JOINING WIRE HARNESS AND WIRE HARNESS

Code	See Page	Joining Wire Harness and Wire Harness (Connector Location)
IA4	44	Engine Room Main Wire and Cowl Wire (Left Kick Panel)
IE1	46	Engine Wire and Cowl Wire (Right Side of Instrument Panel)



: GROUND POINTS

Code	See Page	Ground Points Location
EA	40 (2UZ–FE)	Front Left Fender
EB	40 (2UZ–FE)	Rear Bank of Right Cylinder Head
EC	40 (2UZ–FE)	Rear Bank of Left Cylinder Head
IE	44	Left Kick Panel
IH	44	Right Kick Panel



: SPLICE POINTS

Code	See Page	Wire Harness with Splice Points	Code	See Page	Wire Harness with Splice Points
I2	46	Cowl Wire	I5	46	Cowl Wire
I3	46	Engine Wire			

* 1 : w/ Daytime Running Light * 2 : w/o Daytime Running Light * 3 : Bench Seat * 4 : Separate Seat, Captain Seat (w/o Power Seat)

ELECTRONICALLY CONTROLLED TRANSMISSION AND A/T INDICATOR

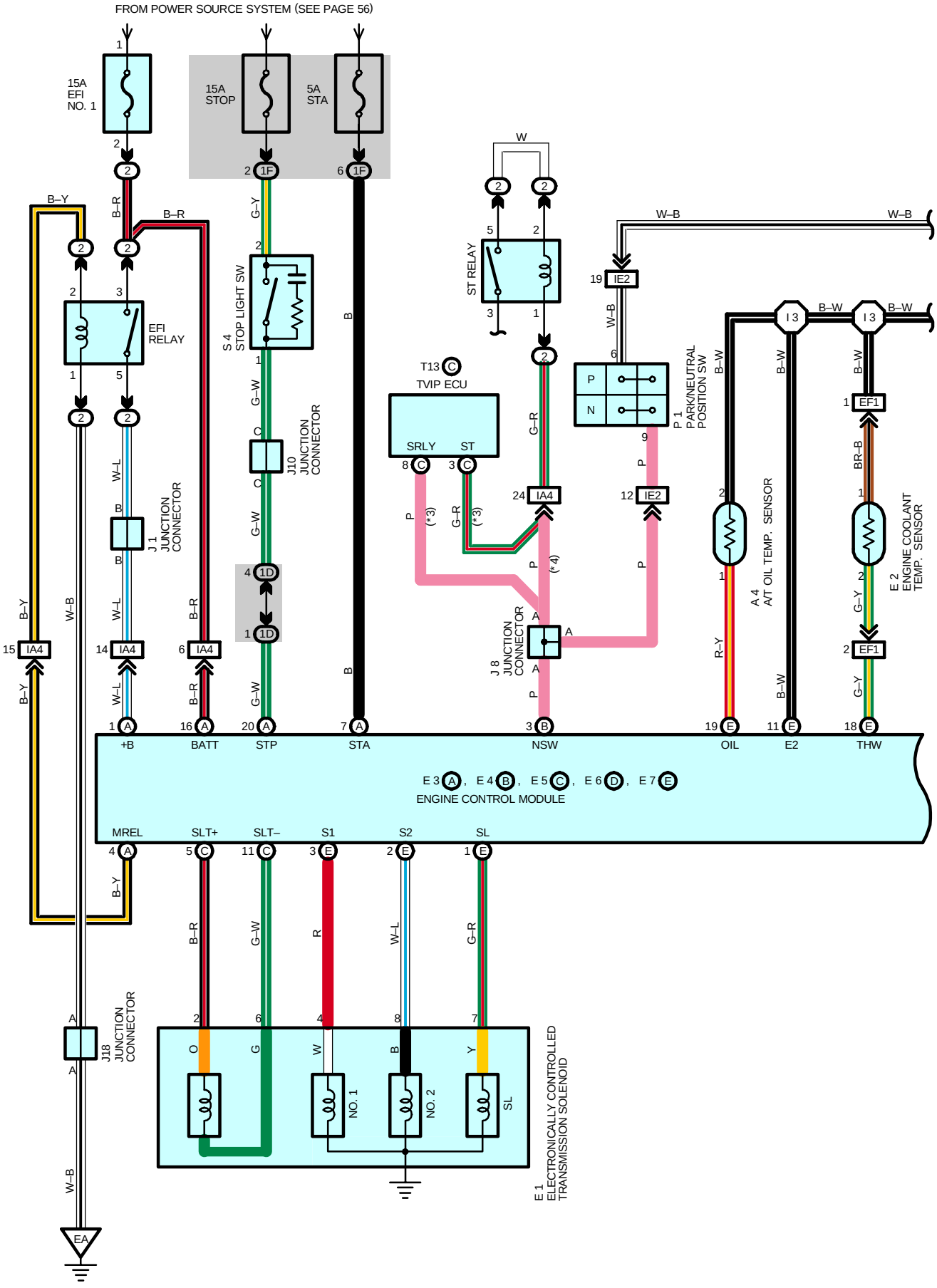

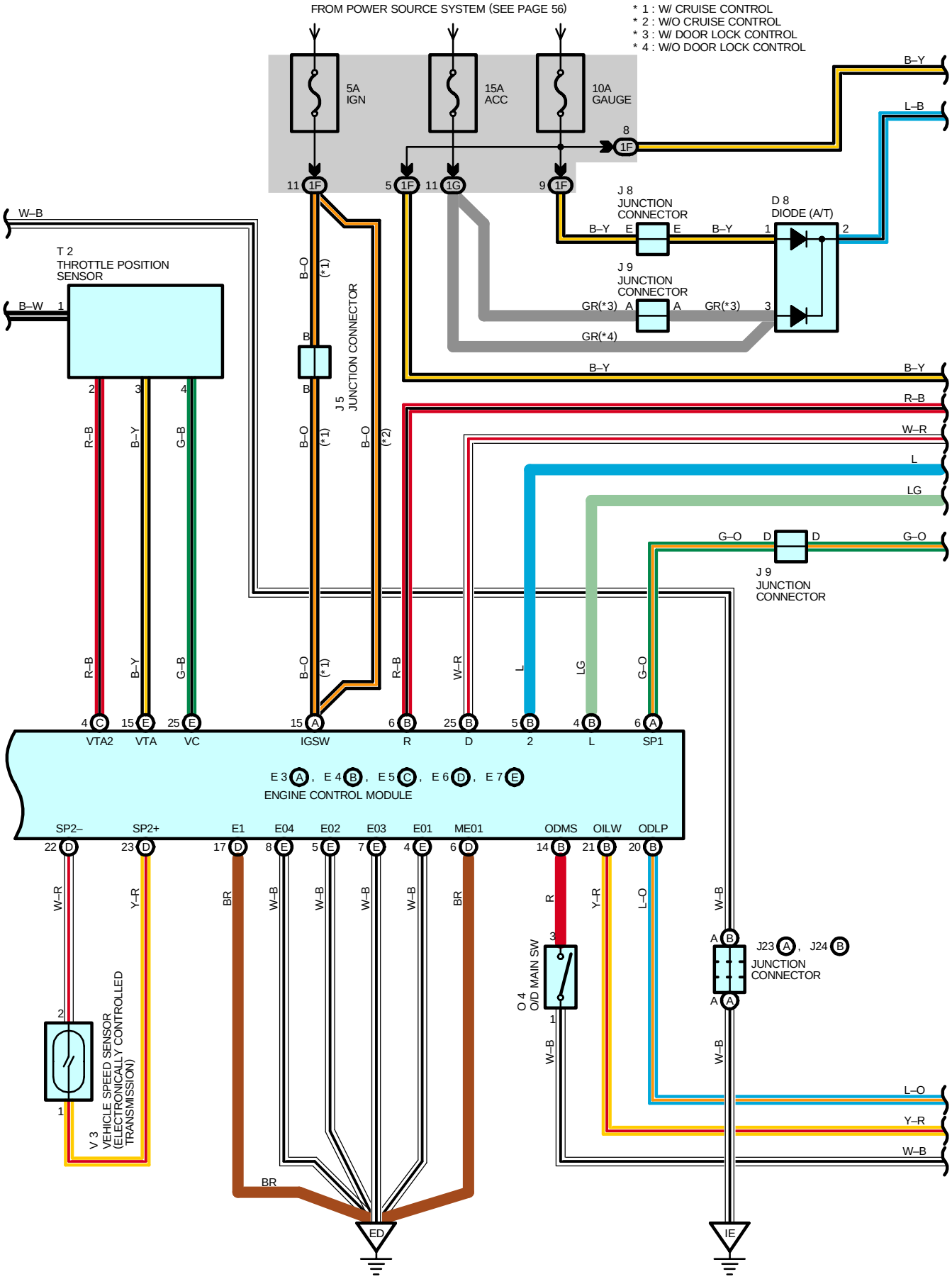
FROM POWER SOURCE SYSTEM (SEE PAGE 56)
* 1 : W/ CRUISE CONTROL
* 2 : W/O CRUISE CONTROL
* 3 : W/ DOOR LOCK CONTROL
* 4 : W/O DOOR LOCK CONTROL
5A IGN
15A ACC
10A GAUGE
J 8 JUNCTION CONNECTOR
D 8 DIODE (A/T)
J 9 JUNCTION CONNECTOR
T 2 THROTTLE POSITION SENSOR
J 5 JUNCTION CONNECTOR
J 9 JUNCTION CONNECTOR
VTA2
VTA
VC
IGSW
R
D
2
L
SP1
E3 A , E4 B , E5 C , E6 D , E7 E
ENGINE CONTROL MODULE
SP2–
SP2+
E1
E04
E02
E03
E01
ME01
ODMS
OILW
ODLP
V 3 VEHICLE SPEED SENSOR (ELECTRONICALLY CONTROLLED TRANSMISSION)
O 4 O/D MAIN SW
J23 A , J24 B JUNCTION CONNECTOR
ED
IE

ELECTRONICALLY CONTROLLED TRANSMISSION AND A/T INDICATOR

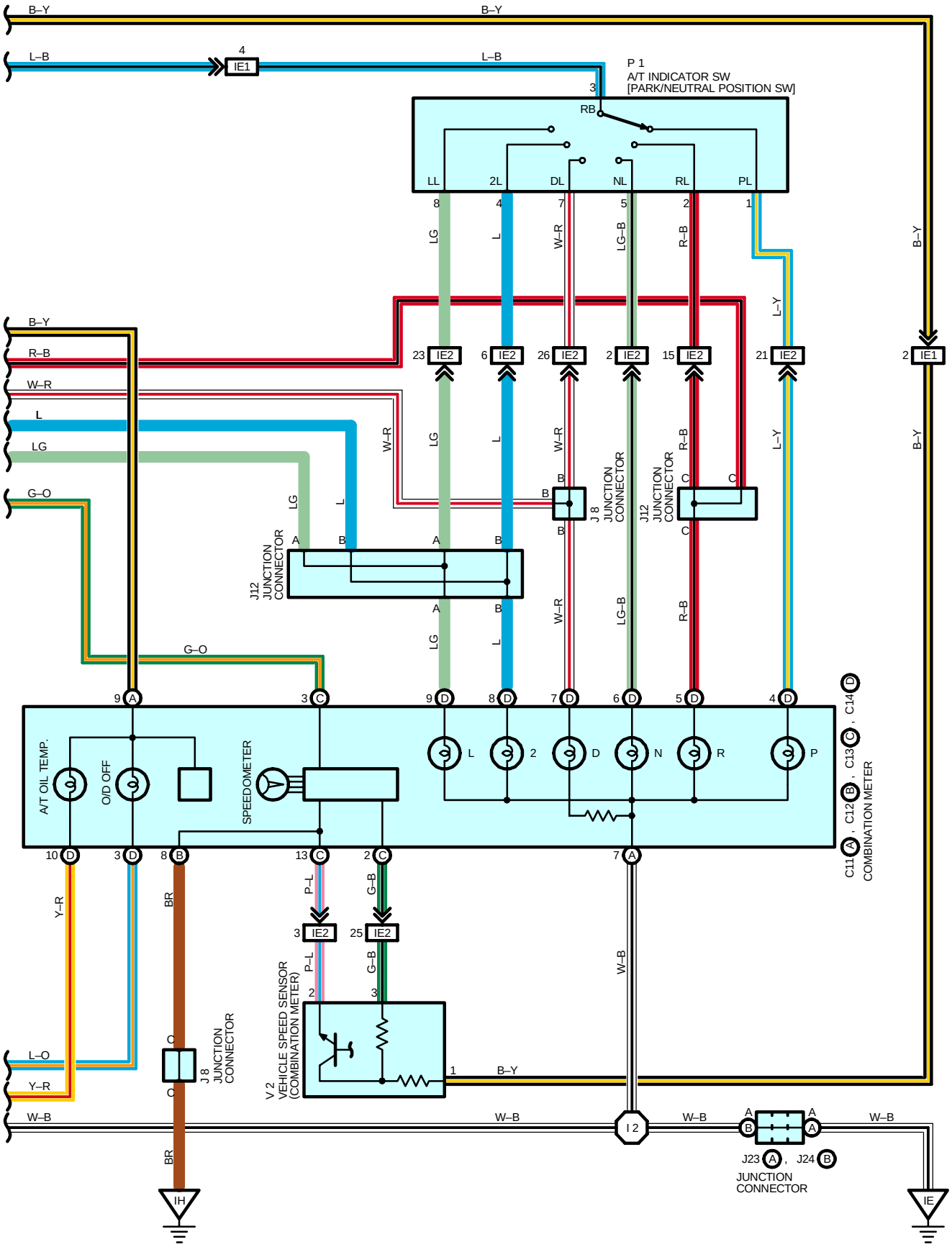

SYSTEM OUTLINE

Previous automatic transmissions have selected each gear shift using mechanically controlled throttle hydraulic pressure, governor hydraulic pressure and lock-up hydraulic pressure. The electronically controlled transmission, however, electrically controls the governor pressure and lock-up sensor through the solenoid valve. Control of the solenoid valve by the engine control module based on the input signals from each sensor makes smooth driving possible by shift selection for each gear which is most appropriate to the driving conditions at that time.

1. GEAR SHIFT OPERATION

During driving, the engine control module selects the shift for each gear which is most appropriate to the driving conditions, based on input signals from the engine coolant temp. sensor to TERMINAL THW of the engine control module and also the input signals to TERMINAL SP2+ of the engine control module from the vehicle speed sensor devoted to the electronically controlled transmission. Current is then output to the electronically controlled transmission solenoid. When shifting to 1st speed, current flows from TERMINAL S1 of the engine control module to TERMINAL 4 of the electronically controlled transmission solenoid to GROUND, and continuity to the No.1 solenoid causes the shift.

For 2nd gear, current flows from TERMINAL S1 of the engine control module to TERMINAL 4 of the electronically controlled transmission solenoid to GROUND, and from TERMINAL S2 of the engine control module to TERMINAL 8 of the electronically controlled transmission solenoid to GROUND. And continuity to solenoid No.1 and No.2 causes the shift.

For 3rd gear, there is no continuity to No.1 solenoid, only to No.2 causing the shift. Shifting into 4th gear (Overdrive) takes place when there is no continuity to either No.1 or No.2 solenoid.

2. LOCK-UP OPERATION

When the engine control module judges from each signal that lock-up operation conditions have been met, current flows from TERMINAL SL of the engine control module to TERMINAL 7 of the electronically controlled transmission solenoid to GROUND, causing continuity to the lock-up solenoid and causing lock-up operation.

3. STOP LIGHT SW CIRCUIT

If the brake pedal is depressed (Stop light SW on) when driving in lock–up position, a signal is input to TERMINAL STP of the engine control module. As a result, the engine control module cuts the current to the solenoid to release the lock–up.

4. OVERDRIVE CIRCUIT

∗ O/D main SW on

When the O/D main SW is switched to ON position, a signal is input to TERMINAL ODMS of the engine control module, and enables shift change to the overdrive range, through the control of the engine control module.

∗ O/D main SW off

When the O/D main SW is switched to OFF position, a signal is input to TERMINAL ODMS of the engine control module, and prohibits shift change to the overdrive range through the control of the engine control module. When in the overdrive range already, shift down is made.

ELECTRONICALLY CONTROLLED TRANSMISSION AND A/T INDICATOR

SERVICE HINTS

E1 ELECTRONICALLY CONTROLLED TRANSMISSION SOLENOID

4, 7, 8-GROUND : Approx. **13** Ω

O4 O/D MAIN SW

3–1 : Open with O/D main SW at **ON** position
Closed with O/D main SW at **OFF** position

S4 STOP LIGHT SW

1–2 : Closed with brake pedal depressed

E3(A), E4 (B), E6 (C), E7 (D) ENGINE CONTROL MODULE

S1-E1 : **9**-**14** volts with vehicle not move and shift lever in **D** position
S2,SL-E1 : **0**-**1.5** volts with vehicle not move
STP–E1 : **7.5**–**14** volts with brake pedal depressed
: **0**–**1.5** volts with brake pedal released
THW–E1 : **0.2**–**1.0** volts with idling, engine coolant temp. **60**˚C (**140**˚F)–**120**˚C (**248**˚F)
VTA–E1 : **0.3**–**1.0** volts with ignition SW on and throttle valve fully closed
: **3.2**–**4.9** volts with ignition SW on and throttle valve fully open
VC–E1 : **4.5**–**5.5** volts with ignition SW at **ON** or **ST** position
ODMS–E1 : **9**–**14** volts with O/D main SW turned on
: **0**–**3** volts with O/D main SW turned off
SP1–E1 : Pulse generation with vehicle moving
2–E1 : **7.5**–**14** volts with shift lever at **2** position
: **0**–**1.5** volts with shift lever at except **2** position
L–E1 : **7.5**–**14** volts with shift lever at **L** position
: **0**–**1.5** volts with shift lever at except **L** position
+B–E1 : **9**–**14** volts with ignition SW at **ON** or **ST** position
BATT–E1 : Always **9**–**14** volts
OIL–E2 : **0.1**–**0.9** volts after engine warm up
OILW–E1 : **0**–**1.5** volts with engine cranking at **400** rpm or more

P1 A/T INDICATOR SW [PARK/NEUTRAL POSITION SW]

3–1 : Closed with shift lever in **P** position
3–2 : Closed with shift lever in **R** position
3–5 : Closed with shift lever in **N** position
3–7 : Closed with shift lever in **D** position
3–4 : Closed with shift lever in **2** position
3–8 : Closed with shift lever in **L** position

: PARTS LOCATION

Code	See Page	Code	See Page	Code	See Page
A4	32 (5VZ–FE)	E5 C	34	J23 A	35
C11 A	34	E6 D	34	J24 B	35
C12 B	34	E7 E	34	O4	35
C13 C	34	J1	33 (5VZ–FE)	P1	33 (5VZ–FE)
C14 D	34	J5	35	S4	35
D8	34	J8	35	T2	33 (5VZ–FE)
E1	32 (5VZ–FE)	J9	35	T13 C	35
E2	32 (5VZ–FE)	J10	35	V2	33 (5VZ–FE)
E3 A	34	J12	35	V3	33 (5VZ–FE)
E4 B	34	J18	33 (5VZ–FE)		

: RELAY BLOCKS

Code	See Page	Relay Blocks (Relay Block Location)
2	21	Engine Room R/B (Engine Compartment Left)



: JUNCTION BLOCK AND WIRE HARNESS CONNECTOR

Code	See Page	Junction Block and Wire Harness (Connector Location)
1D	22 (*2)	Cowl Wire and Driver Side J/B (Lower Finish Panel)
	26 (*1)	
1F	22 (*2)	
	26 (*1)	
1G	22 (*2)	
	26 (*1)	



: CONNECTOR JOINING WIRE HARNESS AND WIRE HARNESS

Code	See Page	Joining Wire Harness and Wire Harness (Connector Location)
EF1	42 (5VZ–FE)	Engine Wire and Sensor Wire (Over the Cylinder Head)
IA4	44	Engine Room Main Wire and Cowl Wire (Left Kick Panel)
IE1	46	Engine Wire and Cowl Wire (Right Side of Instrument Panel)
IE2		



: GROUND POINTS

Code	See Page	Ground Points Location
EA	42 (5VZ–FE)	Front Left Fender
ED	42 (5VZ–FE)	Intake Manifold Left
IE	44	Left Kick Panel
IH	44	Right Kick Panel



: SPLICE POINTS

Code	See Page	Wire Harness with Splice Points	Code	See Page	Wire Harness with Splice Points
I2	46	Cowl Wire	I3	46	Engine Wire

* 1 : w/ Daytime Running Light * 2 : w/o Daytime Running Light * 3 : Bench Seat * 4 : Separate Seat, Captain Seat (w/o Power Seat)

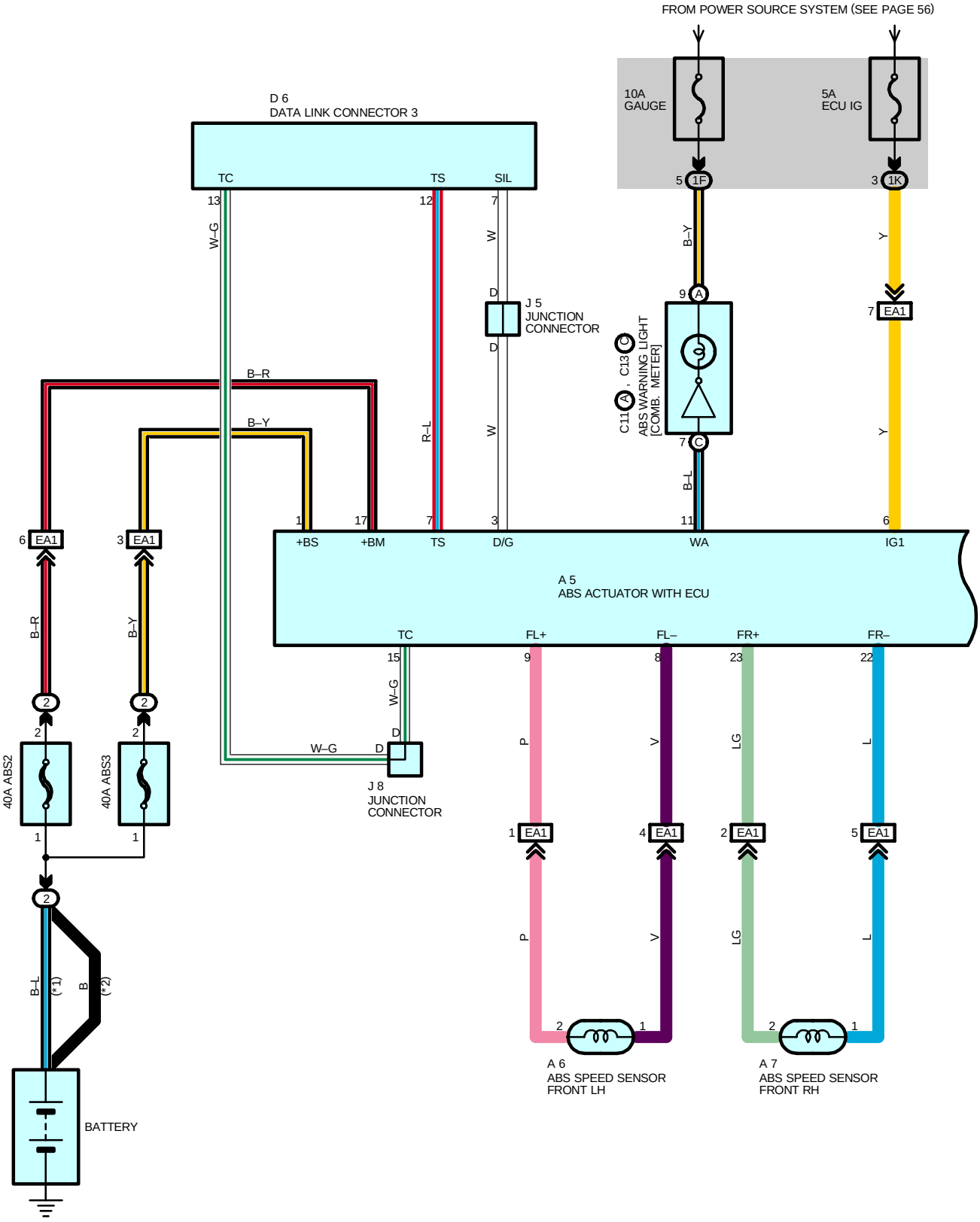
FROM POWER SOURCE SYSTEM (SEE PAGE 56)
10A
GAUGE
5A
ECU IG
5
1F
3
1K
D 6
DATA LINK CONNECTOR 3
TC
TS
SIL
13
12
7
W–G
W
B–Y
Y
D
J 5
JUNCTION
CONNECTOR
D
9
A
7
EA1
C11
A
, C13
C
ABS WARNING LIGHT
[COMB. METER]
7
C
B–L
B–R
B–Y
R–L
W
Y
6
EA1
3
EA1
1
17
7
3
11
6
+BS
+BM
TS
D/G
WA
IG1
A 5
ABS ACTUATOR WITH ECU
TC
FL+
FL–
FR+
FR–
15
9
8
23
22
W–G
P
V
LG
L
D
W–G
D
J 8
JUNCTION
CONNECTOR
2
2
2
2
40A ABS2
40A ABS3
1
1
1
EA1
4
EA1
2
EA1
5
EA1
2
B–L
(*1)
B
(*2)
P
V
LG
L
2
1
2
1
A 6
ABS SPEED SENSOR
FRONT LH
A 7
ABS SPEED SENSOR
FRONT RH
BATTERY

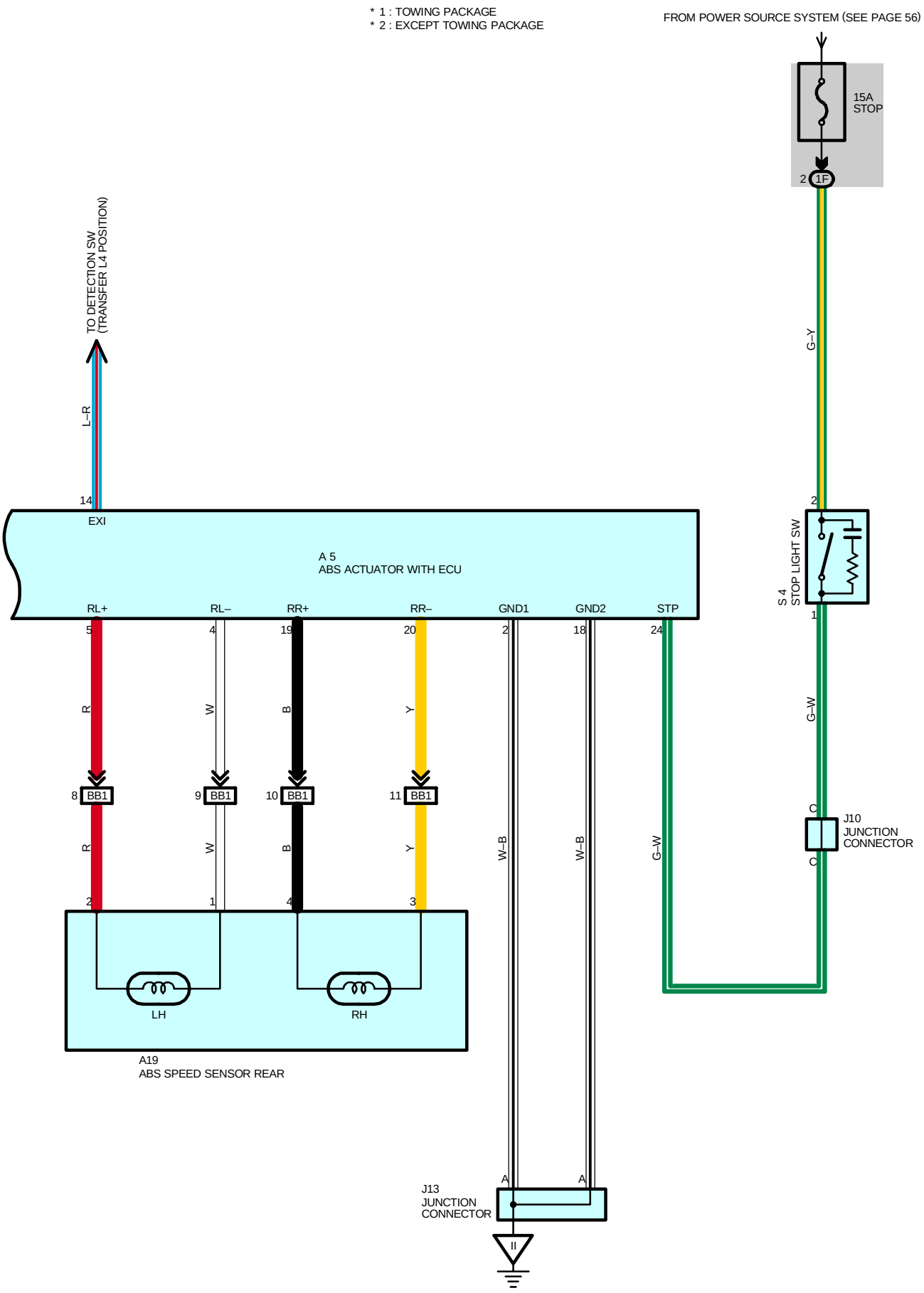
* 1 : TOWING PACKAGE
* 2 : EXCEPT TOWING PACKAGE
FROM POWER SOURCE SYSTEM (SEE PAGE 56)
15A
STOP
2
1F
TO DETECTION SW
(TRANSFER L4 POSITION)
L–R
14
EXI
G–Y
2
S 4
STOP LIGHT SW
1
A 5
ABS ACTUATOR WITH ECU
RL+
RL–
RR+
RR–
GND1
GND2
STP
5
4
19
20
2
18
24
R
W
B
Y
W–B
W–B
G–W
G–W
8
BB1
9
BB1
10
BB1
11
BB1
C
J10
JUNCTION
CONNECTOR
C
R
W
B
Y
2
1
4
3
LH
RH
A19
ABS SPEED SENSOR REAR
A
A
J13
JUNCTION
CONNECTOR

SYSTEM OUTLINE

This system controls the respective brake fluid pressures acting on the disc brake cylinders of the right front wheel, left front wheel, and rear wheels when the brakes are applied in a panic stop so that the wheels do not lock.
This results in improved directional stability and steerability during panic braking.

1. INPUT SIGNAL

(1) Speed sensor signal

The speed of the wheels is detected and input to TERMINALS FL+, FR+, RL+ and RR+ of the ABS actuator with ECU.

(2) Stop light SW signal

A signal is input to TERMINAL STP of the ABS actuator with ECU when the brake pedal is depressed.

2. SYSTEM OPERATION

During sudden braking, the ABS actuator with ECU which has signals input from each sensor lets the hydraulic pressure acting on each wheel cylinder escape to the reservoir.
The pump inside the ABS actuator with ECU is also operating at this time and it returns the brake fluid from the reservoir to the master cylinder, thus preventing locking of vehicle wheels.
If the ABS actuator with ECU judges that the hydraulic pressure acting on the wheel cylinder is insufficient, the current acting on the solenoid is controlled and the hydraulic pressure is increased.
Holding of the hydraulic pressure is also controlled by the ECU, by the same method as above, by repeated pressure reduction. Holding and increase are repeated to maintain vehicle stability and to improve steerability during sudden braking.

SERVICE HINTS

A6, A7 ABS SPEED SENSOR FRONT LH, RH

1–2 : **0.92**–**1.22** kΩ (**20**˚C, **68**˚F)

A19 ABS SPEED SENSOR REAR

1–2 : **0.89**–**1.29** kΩ (**20**˚C, **68**˚F)
3–4 : **0.89**–**1.29** kΩ (**20**˚C, **68**˚F)

A5 ABS ACTUATOR WITH ECU

6–GROUND : **10**–**14** volts with ignition SW at **ON** or **ST** position
24–GROUND : **10**–**14** volts with stop light SW on (Brake pedal depressed)
2, 18–GROUND : Always continuity

S4 STOP LIGHT SW

2–1 : Closed with brake pedal depressed

: PARTS LOCATION

Code	See Page	Code	See Page	Code	See Page
A5	30 (2UZ–FE)	A19	36 (Access Cab)	J8	35
	32 (5VZ–FE)		37 (Standard Cab)	J10	35
A6	30 (2UZ–FE)	C11 A	34	J13	35
	32 (5VZ–FE)	C13 C	34	S4	35
A7	30 (2UZ–FE)	D6	34		
	32 (5VZ–FE)	J5	35		

: RELAY BLOCKS

Code	See Page	Relay Blocks (Relay Block Location)
2	21	Engine Room R/B (Engine Compartment Left)

: JUNCTION BLOCK AND WIRE HARNESS CONNECTOR

Code	See Page	Junction Block and Wire Harness (Connector Location)
1F	22 (*2)	Cowl Wire and Driver Side J/B (Lower Finish Panel)
	26 (*1)	
1K	22 (*2)	Engine Room Main Wire and Driver Side J/B (Lower Finish Panel)
	26 (*1)	

* 1 : w/ Daytime Running Light * 2 : w/o Daytime Running Light * 3 : Bench Seat * 4 : Separate Seat, Captain Seat (w/o Power Seat)

: CONNECTOR JOINING WIRE HARNESS AND WIRE HARNESS

Code	See Page	Joining Wire Harness and Wire Harness (Connector Location)
EA1	40 (2UZ–FE)	Cowl Wire and Engine Room Main Wire (Right Fender)
	42 (5VZ–FE)	
BB1	48 (Access Cab)	Frame Wire and Cowl Wire (Under the Driver's Seat)
	50 (Standard Cab)	

: GROUND POINTS

Code	See Page	Ground Points Location
II	44	Right Kick Panel

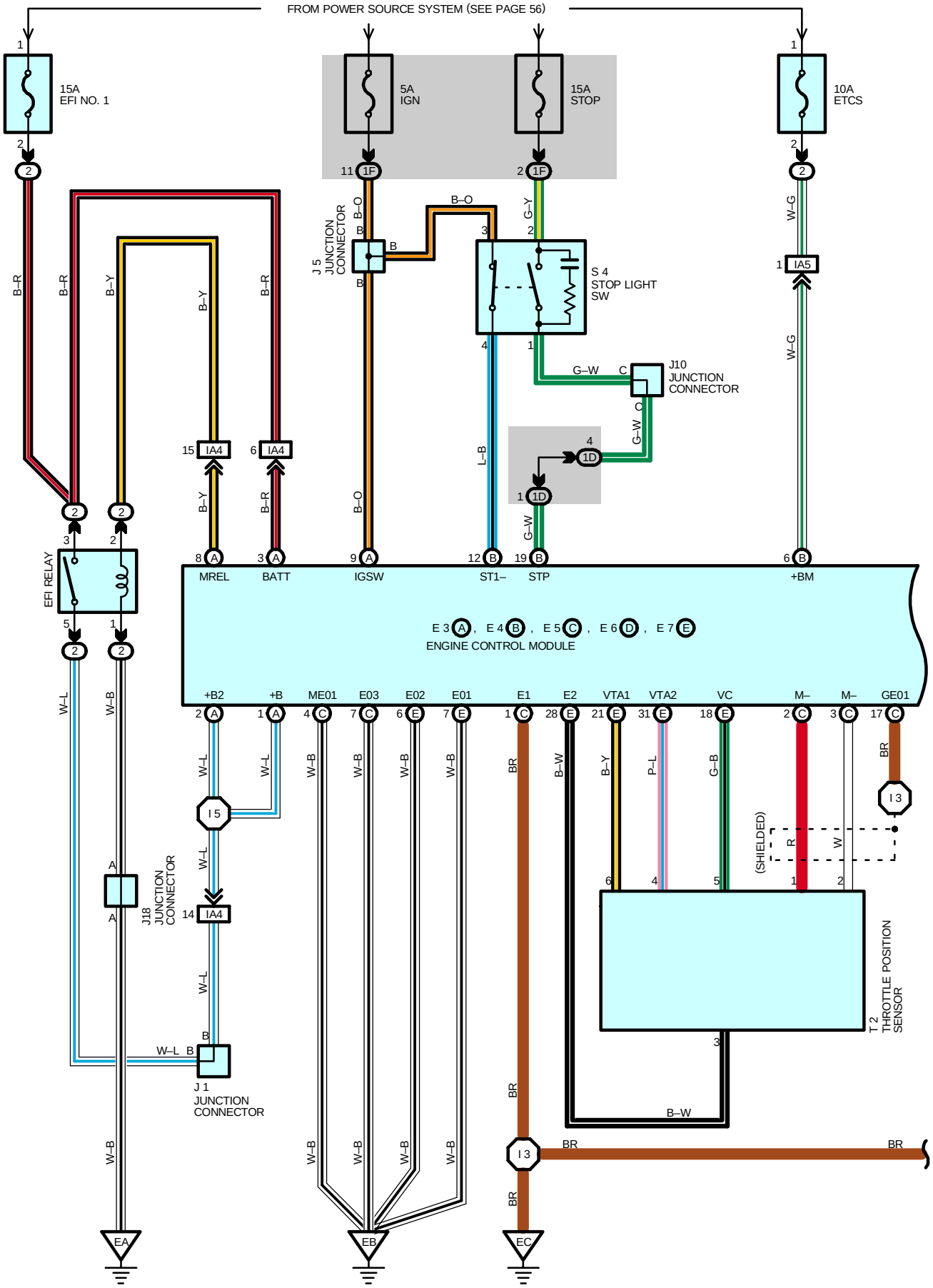
FROM POWER SOURCE SYSTEM (SEE PAGE 56)
15A EFI NO. 1
5A IGN
15A STOP
10A ETCS
J 5 JUNCTION CONNECTOR
S 4 STOP LIGHT SW
J10 JUNCTION CONNECTOR
EFI RELAY
MREL
BATT
IGSW
ST1–
STP
+BM
E 3 A , E 4 B , E 5 C , E 6 D , E 7 E
ENGINE CONTROL MODULE
+B2
+B
ME01
E03
E02
E01
E1
E2
VTA1
VTA2
VC
M–
M–
GE01
J18 JUNCTION CONNECTOR
J 1 JUNCTION CONNECTOR
(SHIELDED)
THROTTLE POSITION SENSOR
EA
EB
EC

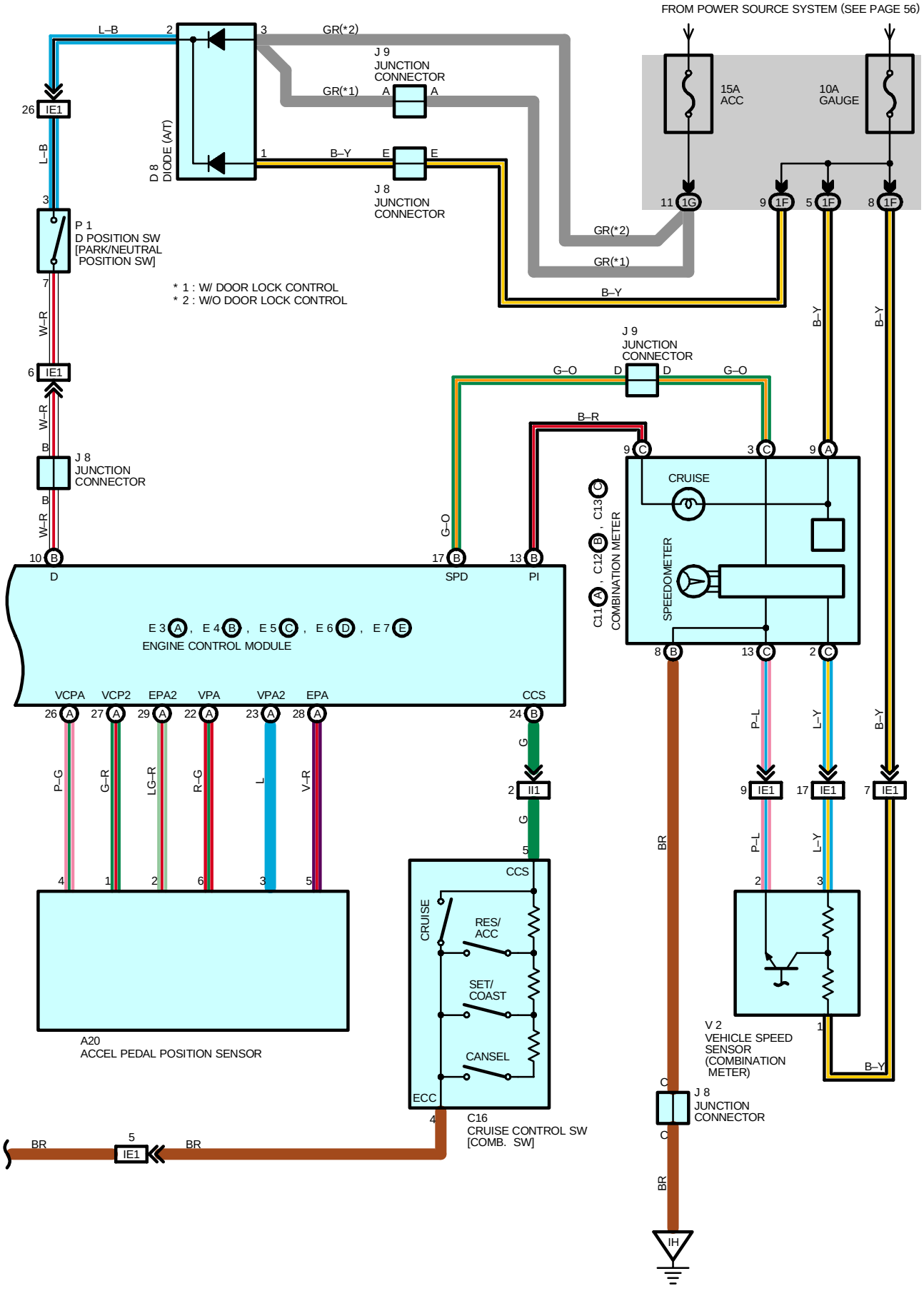
FROM POWER SOURCE SYSTEM (SEE PAGE 56)
15A ACC
10A GAUGE
L–B
GR(*2)
GR(*1)
B–Y
J 9 JUNCTION CONNECTOR
J 8 JUNCTION CONNECTOR
D 8 DIODE (A/T)
P 1 D POSITION SW [PARK/NEUTRAL POSITION SW]
* 1 : W/ DOOR LOCK CONTROL
* 2 : W/O DOOR LOCK CONTROL
W–R
G–O
B–R
CRUISE
SPEEDOMETER
COMBINATION METER
C11 , C12 , C13
E 3 , E 4 , E 5 , E 6 , E 7
ENGINE CONTROL MODULE
VCPA VCP2 EPA2 VPA VPA2 EPA
CCS
P–G G–R LG–R R–G L V–R G
A20
ACCEL PEDAL POSITION SENSOR
C16
CRUISE CONTROL SW [COMB. SW]
RES/ ACC
SET/ COAST
CANSEL
ECC
P–L L–Y
V 2
VEHICLE SPEED SENSOR (COMBINATION METER)
BR
IH

CRUISE CONTROL (2UZ–FE)

SYSTEM OUTLINE

The cruise control system is a constant vehicle speed controller which controls the opening angle of the engine throttle valve by the SW, and allows driving at a constant speed without depressing the accelerator pedal.

SET CONTROL

When the SET/COAST SW is operated while traveling with the main SW on, the speed when the SET/COAST SW is operated to off is memorized, and the vehicle speed is controlled at that speed.

COAST CONTROL

When the SET/COAST SW is operated to on, the cruise control opening angle requirement is turned to 0 to decrease the vehicle speed, and the speed when the SET/COAST SW is operated to off is memorized, and the vehicle speed is controlled at that speed.
Furthermore, every time the SET/COAST SW is operated momentarily (Approx. 0.5 sec.) to on, the memorized vehicle speed is decreased by approx. 1.6 km/h (1.0 mph).

ACCEL CONTROL

When the RES/ACC SW is operated to on, the throttle motor rotates the throttle valve to open direction to increase the vehicle speed, and the speed when the RES/ACC SW is operated to off is memorized, and the vehicle speed is controlled at that speed.
Furthermore, every time the RES/ACC SW is operated momentarily (Approx. 0.5 sec.) to on, the memorized vehicle speed is increased by approx. 1.6 km/h (1.0 mph).

MANUAL CANCEL MECHANISM

If any of the following signals are input during cruise control traveling, the current to the motor flows in the direction to close the throttle valve, and cancel the cruise control.

(1) Stop lamp SW is on (Brake pedal is depressed)

(2) The CANCEL SW of the control SW is on

(3) CRUISE SW is off

RESUME CONTROL

After canceling the cruise control (Except when the main SW is off) if the vehicle speed is above the minimum speed limit (Approx. 40km/h, 25mph), operating the RES/ACC SW to on from off will cause the system to accelerate and resume to the vehicle speed before manual cancellation.

OVERDRIVE FUNCTION

The overdrive may be cut on an uphill grade, while traveling with the cruise control.
After the overdrive is cut, if the vehicle speed reaches the overdrive resume speed (Set speed minus 2 km/h (1.2 mph)), and if the system determines that the uphill grade has finished, the overdrive will resume after the overdrive timer operation.

AUTO CANCEL OPERATION

If any of the following conditions are detected, the set speed is erased and the control is canceled.

(1) Disconnection and/or short in the stop light SW
(2) Malfunction in the vehicle speed signal
(3) Malfunction in the electronic throttle parts
(4) Malfunction in the stop light SW input circuit
(5) Malfunction in the cancel circuit
(6) The actual vehicle speed becomes slower than the minimum speed limit
(7) The actual vehicle speed becomes –16 km/h (10 mph) slower than the set speed

SERVICE HINTS

E3 (A), E4 (B), E6 (D), E7 (E) ENGINE CONTROL MODULE

IGSW–E1 : **9.0**–**14.0** volts with ignition SW at **ON** or **ST** position
BATT–E1 : Always **9.0**–**14.0** volts
STP–E1 : **7.5**–**14.0** volts with brake pedal depressed
: Below **1.5** volts with brake pedal released

C16 CRUISE CONTROL SW [COMB. SW]

5–3 : Approx. **1540**Ω with CANCEL SW on
Approx. **240**Ω with RES/ACC SW on
Approx. **630**Ω with SET/COAST SW on

: PARTS LOCATION

Code		See Page	Code		See Page	Code	See Page
A20		34	E4	B	34	J9	35
C11	A	34	E5	C	34	J10	35
C12	B	34	E6	D	34	J18	31 (2UZ–FE)
C13	C	34	E7	E	34	P1	31 (2UZ–FE)
C16		34	J1		31 (2UZ–FE)	S4	35
D8		34	J5		35	T2	31 (2UZ–FE)
E3	A	34	J8		35	V2	31 (2UZ–FE)

: RELAY BLOCKS

Code	See Page	Relay Blocks (Relay Block Location)
2	21	Engine Room R/B (Engine Compartment Left)

: JUNCTION BLOCK AND WIRE HARNESS CONNECTOR

Code	See Page	Junction Block and Wire Harness (Connector Location)
1D	22 (*2)	Cowl Wire and Driver Side J/B (Lower Finish Panel)
	26 (*1)	
1F	22 (*2)	
	26 (*1)	
1G	22 (*2)	
	26 (*1)	

: CONNECTOR JOINING WIRE HARNESS AND WIRE HARNESS

Code	See Page	Joining Wire Harness and Wire Harness (Connector Location)
IA4	44	Engine Room Main Wire and Cowl Wire (Left Kick Panel)
IA5		
IE1	46	Engine Wire and Cowl Wire (Right Side of Instrument Panel)
II1	46	Cowl Wire and Cowl Wire (Instrument Panel Reinforcement RH)

: GROUND POINTS

Code	See Page	Ground Points Location
EA	40 (2UZ–FE)	Front Left Fender
EB	40 (2UZ–FE)	Rear Bank of Right Cylinder Head
EC	40 (2UZ–FE)	Rear Bank of Left Cylinder Head
IH	44	Right Kick Panel

: SPLICE POINTS

Code	See Page	Wire Harness with Splice Points	Code	See Page	Wire Harness with Splice Points
I3	46	Engine Wire	I5	46	Cowl Wire

* 1 : w/ Daytime Running Light * 2 : w/o Daytime Running Light * 3 : Bench Seat * 4 : Separate Seat, Captain Seat (w/o Power Seat)

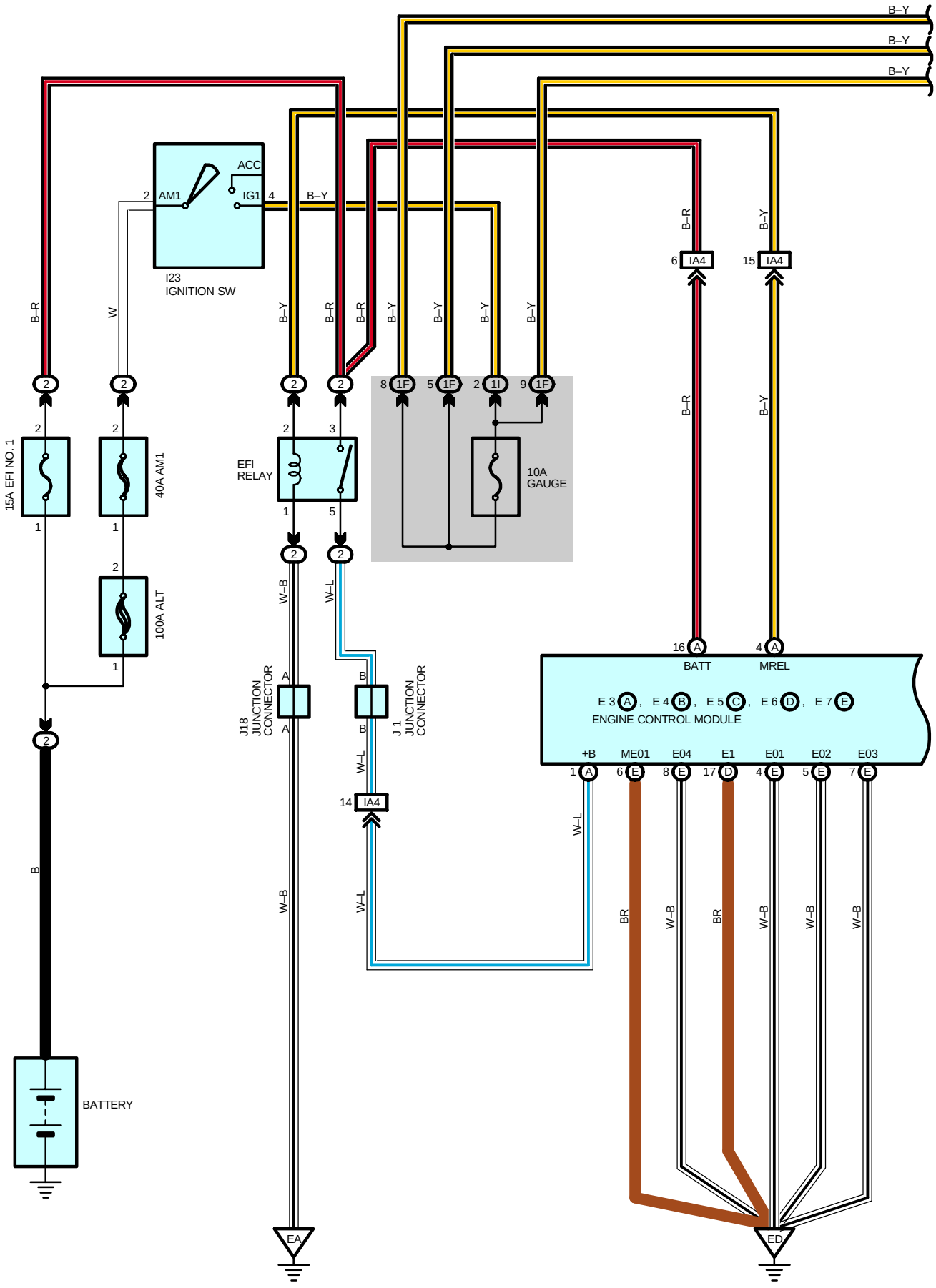
B–Y
B–Y
B–Y
ACC
2 AM1
IG1 4
B–Y
I23
IGNITION SW
B–R
W
B–Y
B–R
B–R
B–Y
B–Y
B–Y
B–Y
6 IA4
15 IA4
B–R
B–Y
8 1F
5 1F
2 1I
9 1F
15A EFI NO. 1
40A AM1
100A ALT
EFI
RELAY
10A
GAUGE
W–B
W–L
J18
JUNCTION
CONNECTOR
J1
JUNCTION
CONNECTOR
14 IA4
16 A
4 A
BATT
MREL
E3 A, E4 B, E5 C, E6 D, E7 E
ENGINE CONTROL MODULE
+B
ME01
E04
E1
E01
E02
E03
1 A
6 E
8 E
17 D
4 E
5 E
7 E
W–L
BR
W–B
BR
W–B
W–B
W–B
B
BATTERY
EA
ED

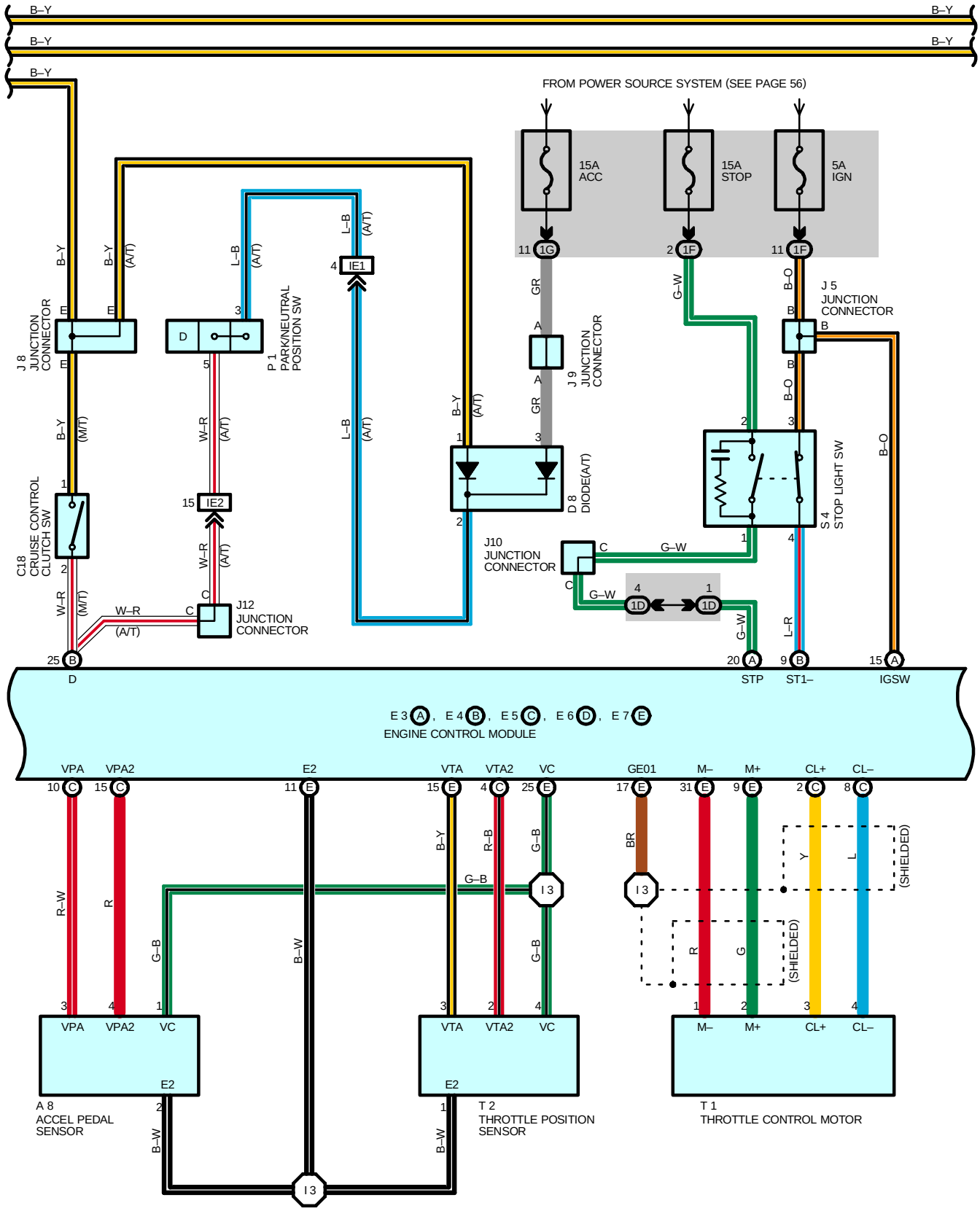
FROM POWER SOURCE SYSTEM (SEE PAGE 56)
15A ACC
15A STOP
5A IGN
J 8 JUNCTION CONNECTOR
P 1 PARK/NEUTRAL POSITION SW
J 9 JUNCTION CONNECTOR
J 5 JUNCTION CONNECTOR
C18 CRUISE CONTROL CLUTCH SW
D 8 DIODE(A/T)
S 4 STOP LIGHT SW
J10 JUNCTION CONNECTOR
J12 JUNCTION CONNECTOR
IE1
IE2
1D
STP
ST1–
IGSW
E3 A, E4 B, E5 C, E6 D, E7 E
ENGINE CONTROL MODULE
VPA
VPA2
E2
VTA
VTA2
VC
GE01
M–
M+
CL+
CL–
(SHIELDED)
I3
A 8 ACCEL PEDAL SENSOR
T 2 THROTTLE POSITION SENSOR
T 1 THROTTLE CONTROL MOTOR

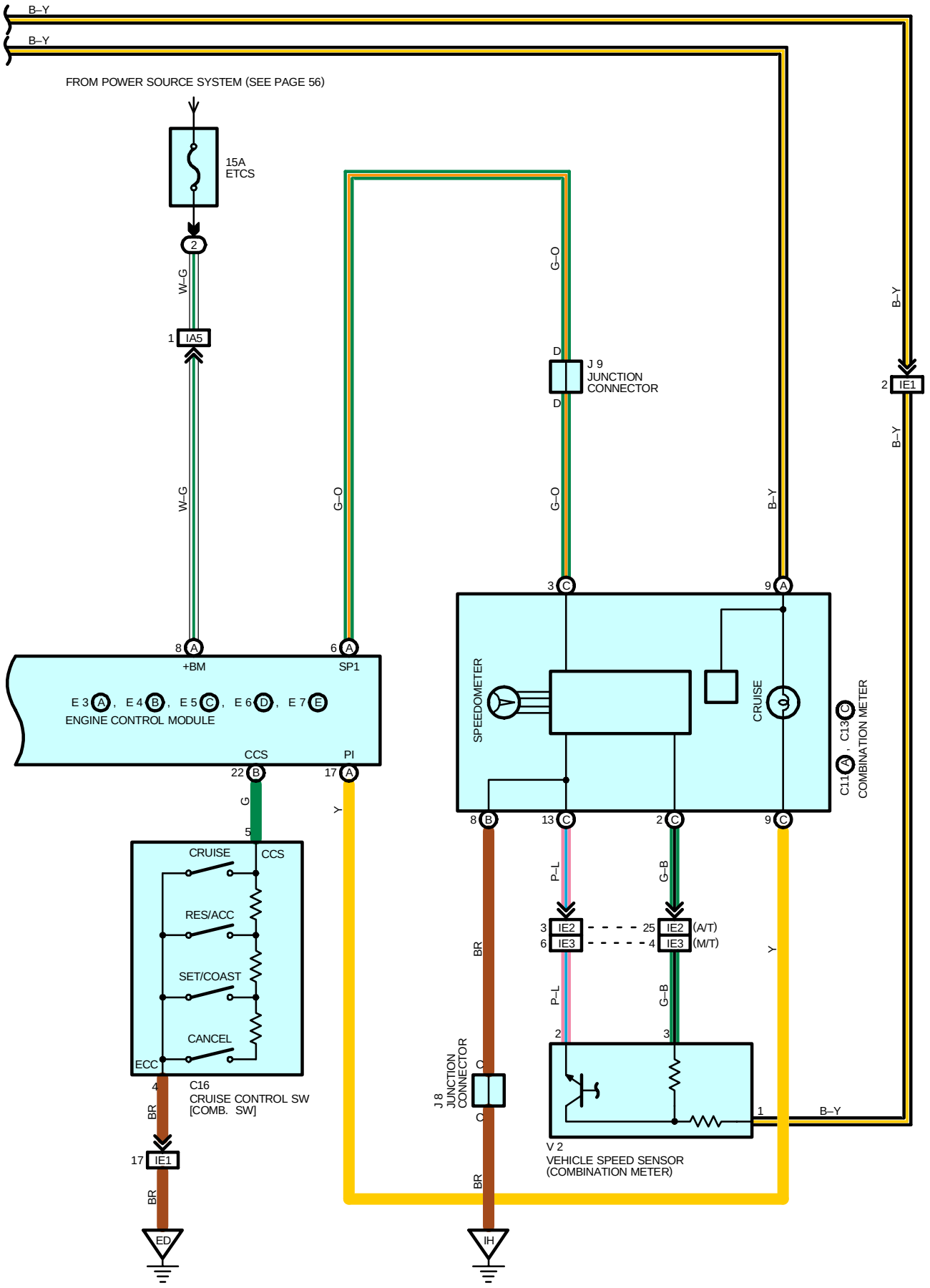
B–Y
B–Y
FROM POWER SOURCE SYSTEM (SEE PAGE 56)
15A
ETCS
2
W–G
1
IA5
W–G
8
A
+BM
E 3 A , E 4 B , E 5 C , E 6 D , E 7 E
ENGINE CONTROL MODULE
CCS
PI
22
B
17
A
G
Y
5
CRUISE
CCS
RES/ACC
SET/COAST
CANCEL
ECC
4
C16
CRUISE CONTROL SW
[COMB. SW]
BR
17
IE1
BR
ED
G–O
6
A
SP1
G–O
D
J 9
JUNCTION
CONNECTOR
D
G–O
3
C
B–Y
9
A
B–Y
2
IE1
B–Y
SPEEDOMETER
CRUISE
C11 A , C13 C
COMBINATION METER
8
B
13
C
2
C
9
C
P–L
G–B
3
IE2
6
IE3
25
IE2
(A/T)
4
IE3
(M/T)
BR
Y
P–L
G–B
2
3
J 8
JUNCTION
CONNECTOR
C
C
BR
1
B–Y
V 2
VEHICLE SPEED SENSOR
(COMBINATION METER)
IH

SYSTEM OUTLINE

The cruise control system is a constant vehicle speed controller which controls the opening angle of the engine throttle valve by the SW, and allows driving at a constant speed without depressing the accelerator pedal.

SET CONTROL

When the SET/COAST SW is operated while traveling with the main SW on, the speed when the SET/COAST SW is operated to off is memorized, and the vehicle speed is controlled at that speed.

COAST CONTROL

When the SET/COAST SW is operated to on, the cruise control opening angle requirement is turned to 0 to decrease the vehicle speed, and the speed when the SET/COAST SW is operated to off is memorized, and the vehicle speed is controlled at that speed.

Furthermore, every time the SET/COAST SW is operated momentarily (Approx. 0.5 sec.) to on, the memorized vehicle speed is decreased by approx. 1.6 km/h (1.0 mph).

ACCEL CONTROL

When the RES/ACC SW is operated to on, the throttle motor rotates the throttle valve to open direction to increase the vehicle speed, and the speed when the RES/ACC SW is operated to off is memorized, and the vehicle speed is controlled at that speed.

Furthermore, every time the RES/ACC SW is operated momentarily (Approx. 0.5 sec.) to on, the memorized vehicle speed is increased by approx. 1.6 km/h (1.0 mph).

MANUAL CANCEL MECHANISM

If any of the following signals are input during cruise control traveling, the current to the motor flows in the direction to close the throttle valve, and cancel the cruise control.

(1) Stop lamp SW is on (Brake pedal is depressed)

(2) The CANCEL SW of the control SW is on

(3) CRUISE SW is off

RESUME CONTROL

After canceling the cruise control (Except when the main SW is off) if the vehicle speed is above the minimum speed limit (Approx. 40km/h, 25mph), operating the RES/ACC SW to on from off will cause the system to accelerate and resume to the vehicle speed before manual cancellation.

OVERDRIVE FUNCTION

The overdrive may be cut on an uphill grade, while traveling with the cruise control.

After the overdrive is cut, if the vehicle speed reaches the overdrive resume speed (Set speed minus 2 km/h (1.2 mph)), and if the system determines that the uphill grade has finished, the overdrive will resume after the overdrive timer operation.

AUTO CANCEL OPERATION

If any of the following conditions are detected, the set speed is erased and the control is canceled.

(1) Disconnection and/or short in the stop light SW

(2) Malfunction in the vehicle speed signal

(3) Malfunction in the electronic throttle parts

(4) Malfunction in the stop light SW input circuit

(5) Malfunction in the cancel circuit

(6) The actual vehicle speed becomes slower than the minimum speed limit

(7) The actual vehicle speed becomes –16 km/h (10 mph) slower than the set speed

SERVICE HINTS

E3 (A), E4 (B), E6 (D), E7 (E) ENGINE CONTROL MODULE

IGSW–E1 : **9.0**–**14.0** volts with ignition SW at **ON** or **ST** position

BATT–E1 : Always **9.0**–**14.0** volts

STP–E1 : **7.5**–**14.0** volts with brake pedal depressed

: Below **1.5** volts with brake pedal released

C16 CRUISE CONTROL SW [COMB. SW]

5–3 : Approx. **1540**Ω with CANCEL SW on

Approx. **240**Ω with RES/ACC SW on

Approx. **630**Ω with SET/COAST SW on

CRUISE CONTROL (5VZ–FE)

: PARTS LOCATION

Code		See Page	Code		See Page	Code	See Page
A8		32 (5VZ–FE)	E5	C	34	J10	35
C11	A	34	E6	D	34	J12	35
C13	C	34	E7	E	34	J18	33 (5VZ–FE)
C16		34	I23		35	P1	33 (5VZ–FE)
C18		34	J1		33 (5VZ–FE)	S4	35
D8		34	J5		35	T1	33 (5VZ–FE)
E3	A	34	J8		35	T2	33 (5VZ–FE)
E4	B	34	J9		35	V2	33 (5VZ–FE)

: RELAY BLOCKS

Code	See Page	Relay Blocks (Relay Block Location)
2	21	Engine Room R/B (Engine Compartment Left)

: JUNCTION BLOCK AND WIRE HARNESS CONNECTOR

Code	See Page	Junction Block and Wire Harness (Connector Location)
1D	22 (*2)	Cowl Wire and Driver Side J/B (Lower Finish Panel)
	26 (*1)	
1F	22 (*2)	
	26 (*1)	
1G	22 (*2)	
	26 (*1)	
1I	22 (*2)	Engine Room Main Wire and Driver Side J/B (Lower Finish Panel)
	26 (*1)	

: CONNECTOR JOINING WIRE HARNESS AND WIRE HARNESS

Code	See Page	Joining Wire Harness and Wire Harness (Connector Location)
IA4	44	Engine Room Main Wire and Cowl Wire (Left Kick Panel)
IA5		
IE1	46	Engine Wire and Cowl Wire (Right Side of Instrument Panel)
IE2		
IE3		

: GROUND POINTS

Code	See Page	Ground Points Location
EA	42 (5VZ–FE)	Front Left Fender
ED	42 (5VZ–FE)	Intake Manifold Left
IH	44	Right Kick Panel

: SPLICE POINTS

Code	See Page	Wire Harness with Splice Points	Code	See Page	Wire Harness with Splice Points
I3	46	Engine Wire			

* 1 : w/ Daytime Running Light * 2 : w/o Daytime Running Light * 3 : Bench Seat * 4 : Separate Seat, Captain Seat (w/o Power Seat)

NOTICE: When inspecting or repairing the SRS, perform the operation in accordance with the following precautionary instructions and the procedure and precautions in the Repair Manual for the applicable model year.

- Malfunction symptoms of the SRS are difficult to confirm, so the DTCs become the most important source of information when troubleshooting. When troubleshooting the SRS, always inspect the DTCs before disconnecting the battery.
- **Work must be started after 90 seconds from when the ignition switch is turned to the "LOCK" position and the negative (–) terminal cable is disconnected from the battery.**
  (The SRS is equipped with a back–up power source so that if work is started within 90 seconds from disconnecting the negative (–) terminal cable of the battery, the SRS may be deployed.)
- When the negative (–) terminal cable is disconnected from the battery, the memory of the clock and audio system will be canceled. So before starting work, make a record of the contents memorized in the audio memory system. When work is finished, reset the audio systems as they were before and adjust the clock. To avoid erasing the memory in each memory system, never use a back–up power supply from outside the vehicle.
- Before repairs, remove the airbag sensor if shocks are likely to be applied to the sensor during repairs.
- Do not expose the steering wheel pad, front passenger airbag assembly, seat belt pretensioner, center airbag sensor assembly or front airbag sensor assembly directly to hot air or flames.
- Even in cases of a minor collision where the SRS does not deploy, the steering wheel pad, front passenger airbag assembly, seat belt pretensioner, center airbag sensor assembly and front airbag sensor assembly should be inspected.
- Never use SRS parts from another vehicle. When replacing parts, replace them with new parts.
- Never disassemble and repair the steering wheel pad, front passenger airbag assembly, seat belt pretensioner, center airbag sensor assembly or front airbag sensor assembly in order to reuse it.
- If the steering wheel pad, front passenger airbag assembly, seat belt pretensioner, center airbag sensor assembly or front airbag sensor assembly has been dropped, or if there are cracks, dents or other defects in the case, bracket or connector, replace them with new ones.
- Use a volt/ohmmeter with high impedance (10 kΩ/V minimum) for troubleshooting the system's electrical circuits.
- Information labels are attached to the periphery of the SRS components. Follow the instructions on the notices.
- After work on the SRS is completed, perform the SRS warning light check.
- If the vehicle is equipped with a mobile communication system, refer to the precaution in the IN section of the Repair Manual.

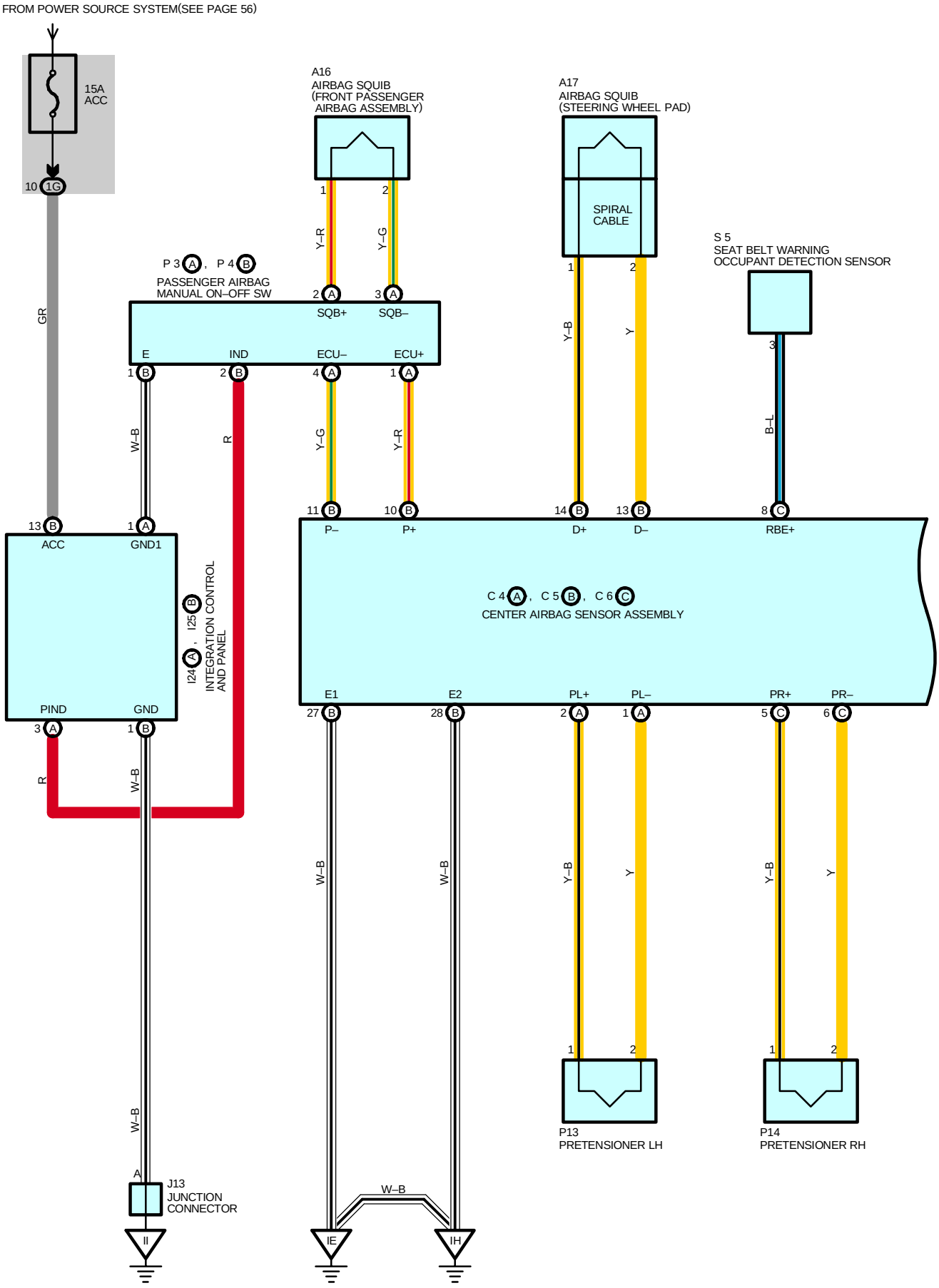
FROM POWER SOURCE SYSTEM(SEE PAGE 56)
15A
ACC
10 1G
GR
A16
AIRBAG SQUIB
(FRONT PASSENGER
AIRBAG ASSEMBLY)
1
2
Y–R
Y–G
P 3 A , P 4 B
PASSENGER AIRBAG
MANUAL ON–OFF SW
2 A
3 A
SQB+
SQB–
E
IND
ECU–
ECU+
1 B
2 B
4 A
1 A
W–B
R
Y–G
Y–R
A17
AIRBAG SQUIB
(STEERING WHEEL PAD)
SPIRAL
CABLE
1
2
Y–B
Y
S 5
SEAT BELT WARNING
OCCUPANT DETECTION SENSOR
3
B–L
13 B
1 A
ACC
GND1
11 B
10 B
14 B
13 B
8 C
P–
P+
D+
D–
RBE+
I25 B , I24 A
INTEGRATION CONTROL
AND PANEL
C 4 A , C 5 B , C 6 C
CENTER AIRBAG SENSOR ASSEMBLY
PIND
GND
3 A
1 B
E1
E2
PL+
PL–
PR+
PR–
27 B
28 B
2 A
1 A
5 C
6 C
R
W–B
Y–B
Y
A
J13
JUNCTION
CONNECTOR
P13
PRETENSIONER LH
P14
PRETENSIONER RH
IE
IH

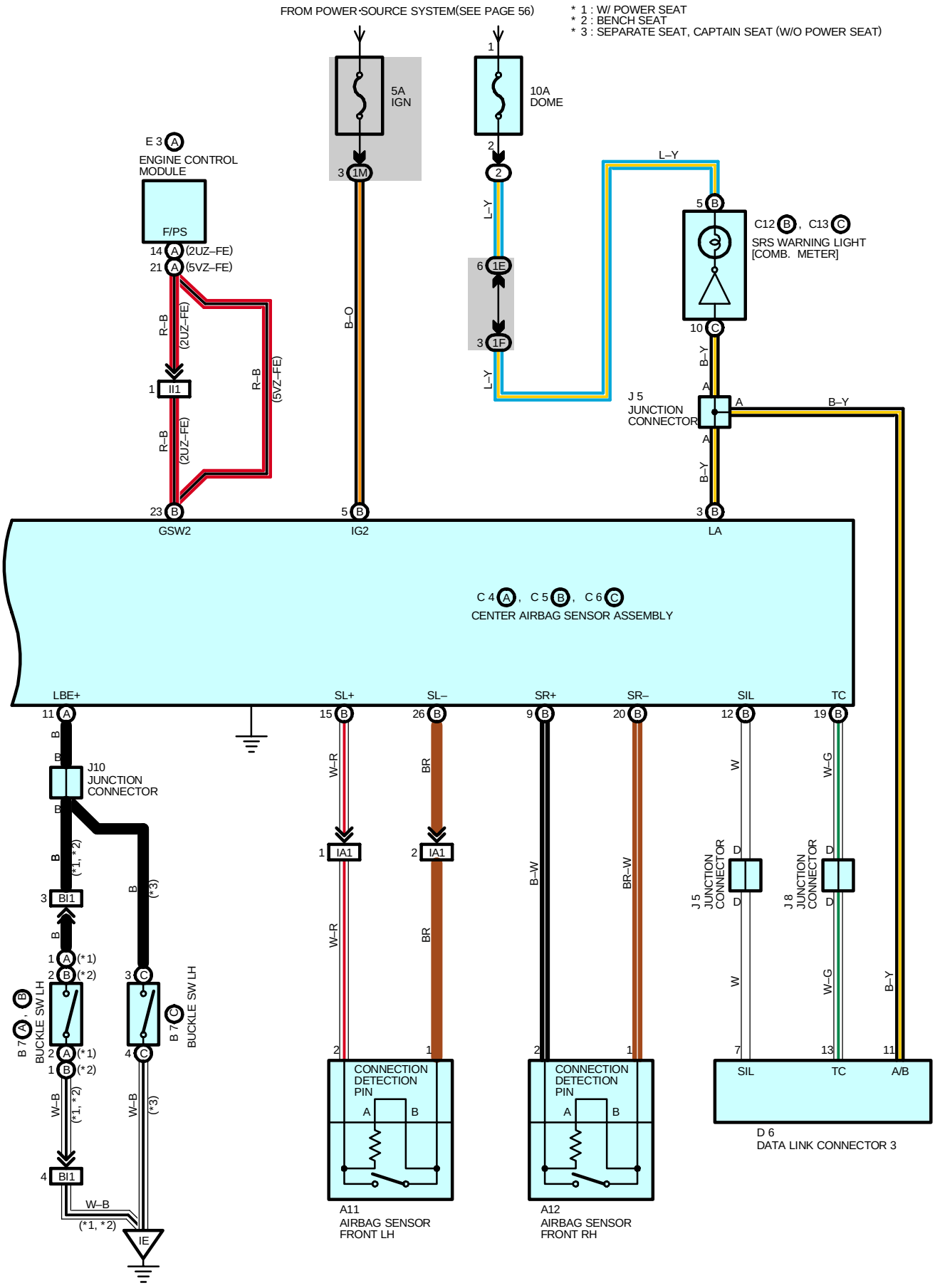
FROM POWER SOURCE SYSTEM(SEE PAGE 56)
* 1 : W/ POWER SEAT
* 2 : BENCH SEAT
* 3 : SEPARATE SEAT, CAPTAIN SEAT (W/O POWER SEAT)
5A IGN
10A DOME
E 3 A
ENGINE CONTROL MODULE
F/PS
14 A (2UZ–FE)
21 A (5VZ–FE)
R–B (2UZ–FE)
R–B (5VZ–FE)
R–B (2UZ–FE)
1 II1
23 B
GSW2
B–O
5 B
IG2
L–Y
6 1E
3 1F
L–Y
5 B
C12 B , C13 C
SRS WARNING LIGHT [COMB. METER]
10 C
B–Y
J 5 JUNCTION CONNECTOR
A
B–Y
3 B
LA
C 4 A , C 5 B , C 6 C
CENTER AIRBAG SENSOR ASSEMBLY
LBE+
SL+
SL–
SR+
SR–
SIL
TC
11 A
15 B
26 B
9 B
20 B
12 B
19 B
J10 JUNCTION CONNECTOR
B
(*1, *2)
3 BI1
(*3)
1 A (*1)
2 B (*2)
3 C
4 C
B 7 A , B
B 7 C
BUCKLE SW LH
W–B (*1, *2)
4 BI1
W–B (*3)
W–B (*1, *2)
IE
W–R
1 IA1
BR
2 IA1
B–W
BR–W
CONNECTION DETECTION PIN
A
B
A11 AIRBAG SENSOR FRONT LH
A12 AIRBAG SENSOR FRONT RH
W
W–G
J5 JUNCTION CONNECTOR
J8 JUNCTION CONNECTOR
D
7
13
11
SIL
TC
A/B
D 6 DATA LINK CONNECTOR 3

SYSTEM OUTLINE

The SRS is a driver protection device which has a supplemental role to the seat belts.
When the ignition SW on, the current from the IGN fuse flows to TERMINAL (B) 5 of the center airbag sensor assembly.
If an accident occurs while driving, deceleration caused by a frontal impact is detected (by sensor) and when the frontal impact exceeds a set level, the current from the IGN fuse flows to TERMINAL (B) 5 of the center airbag sensor assembly. This current flows to TERMINAL (B) 14, (A) 2, (C) 5 to TERMINAL 1 of the airbag squib (Steering wheel pad) and Pretensioners to TERMINAL 2 to TERMINAL (B) 13, (A) 1, (C) 6 of the center airbag sensor assembly, and also flows to TERMINAL (B) 11 of the center airbag sensor assembly to TERMINAL (A) 4 of the passenger airbag manual On–Off SW to TERMINAL (A) 2 to TERMINAL 1 of the airbag squib (Front passenger airbag assembly) to TERMINAL 2 to TERMINAL (A) 3 of the passenger airbag manual On–Off SW to TERMINAL (A) 1 to TERMINAL (B) 10 of the center airbag sensor assembly. Furthermore, the current flows to TERMINAL (B) 27 or (B) 28 to GROUND, causing the center airbag squibs to expand.
When the safing sensor built into the center airbag sensor assembly is on, airbag sensor is off and the current from the IGN fuse flows same as above–mentioned flowing, causing the airbag squibs to expand. When the safing sensor built into the center airbag sensor assembly is on, the airbag sensor on one of the above-mentioned circuits is activated so that current flows to the airbag squibs and causes them to operate.
The airbag stored inside the steering wheel pad is instantaneously expanded to soften the shock to the driver.
The airbag stored inside the passenger's instrument panel is instantaneously expanded to soften the shock to the passenger.

1. FRONT PASSENGER AIRBAG ON/OFF OPERATION

When the passenger airbag manual On–Off SW is on, the current flowing from the IGN fuse to the airbag squib (Front passenger airbag assembly) is same as above, causing the airbag squib (Front passenger airbag assembly) to expand in an accident.
If the passenger airbag manual On–Off SW is turned to off, the current flows from the ACC fuse to TERMINAL (B) 13 of the passenger airbag OFF indicator (Integration control and panel) to TERMINAL (A) 3 to TERMINAL (B) 2 of the airbag manual On–Off SW to TERMINAL (B) 1 to TERMINAL (A) 1 of the integration control and panel to TERMINAL (B) 1 to GROUND, lighting the indicator up. Then the current between TERMINAL (B) 11 of the airbag sensor assembly and the airbag squib (Front passenger airbag assembly) is cut off, so that it does not expand the airbag squib (Front passenger airbag assembly) in an accident.

: PARTS LOCATION

Code		See Page	Code		See Page	Code		See Page
A11		30 (2UZ–FE)	C4	A	34	J10		35
		32 (5VZ–FE)	C5	B	34	J13		35
A12		30 (2UZ–FE)	C6	C	34	P3	A	35
		32 (5VZ–FE)	C12	B	34	P4	B	35
A16		34	C13	C	34	P13		36 (Access Cab)
A17		34	D6		34			37 (Standard Cab)
B7	A	38 (w/ Power Seat)	E3	A	34	P14		36 (Access Cab)
	B	36 (Access Cab *3)	I24	A	35			37 (Standard Cab)
		37 (Standard Cab *3)	I25	B	35	S5		36 (Access Cab)
	C	36 (Access Cab *4)	J5		35			37 (Standard Cab)
		37 (Standard Cab *4)	J8		35			

: RELAY BLOCKS

Code	See Page	Relay Blocks (Relay Block Location)
2	21	Engine Room R/B (Engine Compartment Left)

* 1 : w/ Daytime Running Light * 2 : w/o Daytime Running Light * 3 : Bench Seat * 4 : Separate Seat, Captain Seat (w/o Power Seat)



: JUNCTION BLOCK AND WIRE HARNESS CONNECTOR

Code	See Page	Junction Block and Wire Harness (Connector Location)
1E	22 (*2)	Engine Room Main Wire and Driver Side J/B (Lower Finish Panel)
	26 (*1)	
1F	22 (*2)	Cowl Wire and Driver Side J/B (Lower Finish Panel)
	26 (*1)	
1G	22 (*2)	
	26 (*1)	
1M	22 (*2)	
	26 (*1)	



: CONNECTOR JOINING WIRE HARNESS AND WIRE HARNESS

Code	See Page	Joining Wire Harness and Wire Harness (Connector Location)
IA1	44	Engine Room Main Wire and Cowl Wire (Left Kick Panel)
II1	46	Cowl Wire and Cowl Wire (Instrument Panel Reinforcement RH)
BI1	48 (Access Cab)	Cowl Wire and Seat No.1 Wire (Under the Driver's Seat)
	50 (Standard Cab)	
	52	



: GROUND POINTS

Code	See Page	Ground Points Location
IE	44	Left Kick Panel
IH	44	Right Kick Panel
II		

* 1 : w/ Daytime Running Light * 2 : w/o Daytime Running Light * 3 : Bench Seat * 4 : Separate Seat, Captain Seat (w/o Power Seat)

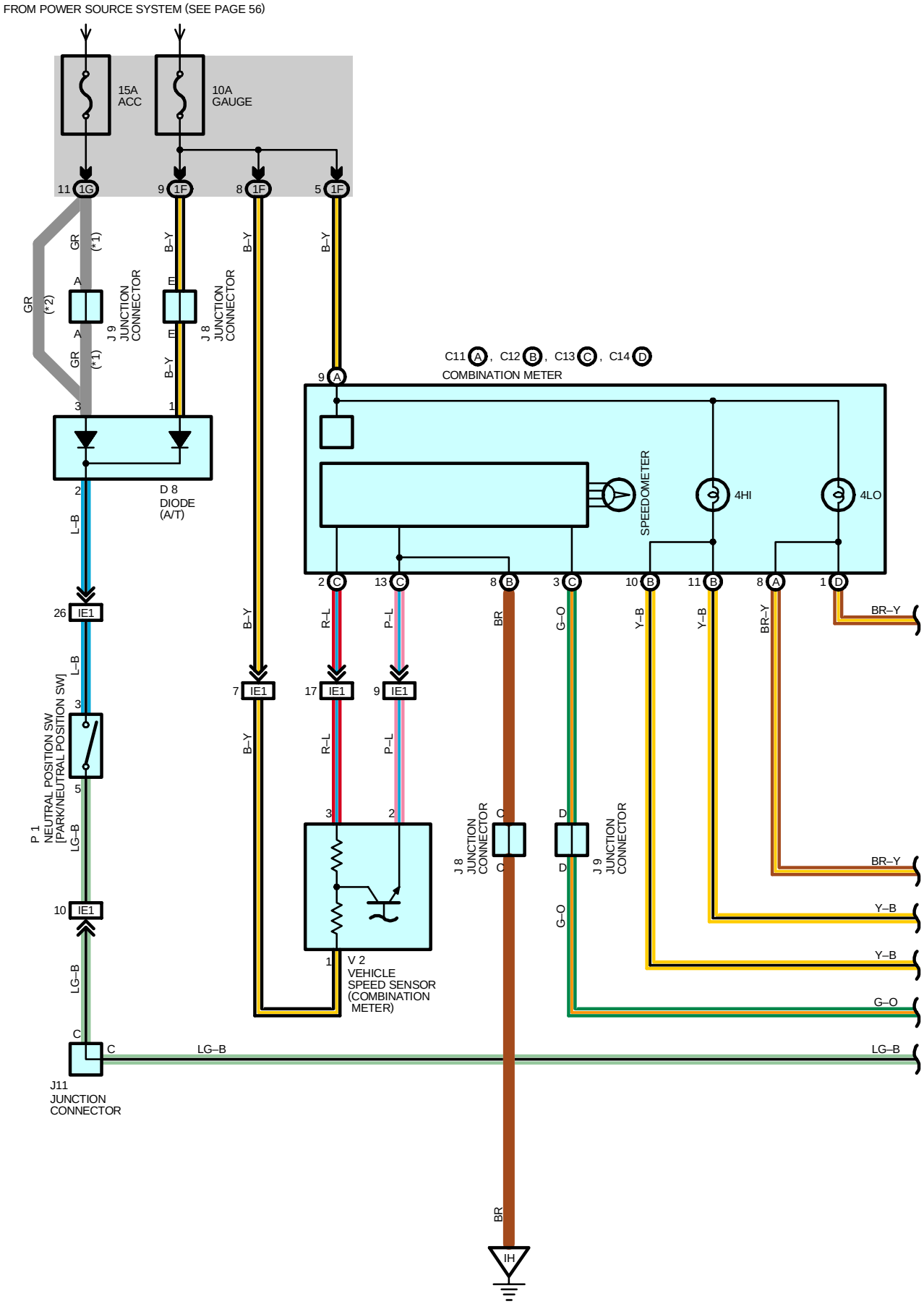
FROM POWER SOURCE SYSTEM (SEE PAGE 56)
15A ACC
10A GAUGE
11 1G
9 1F
8 1F
5 1F
GR (*1)
GR (*2)
B–Y
J 9 JUNCTION CONNECTOR
J 8 JUNCTION CONNECTOR
D 8 DIODE (A/T)
C11 A, C12 B, C13 C, C14 D
COMBINATION METER
SPEEDOMETER
4HI
4LO
L–B
R–L
P–L
BR
G–O
Y–B
BR–Y
LG–B
P 1 NEUTRAL POSITION SW [PARK/NEUTRAL POSITION SW]
V 2 VEHICLE SPEED SENSOR (COMBINATION METER)
J11 JUNCTION CONNECTOR
IH

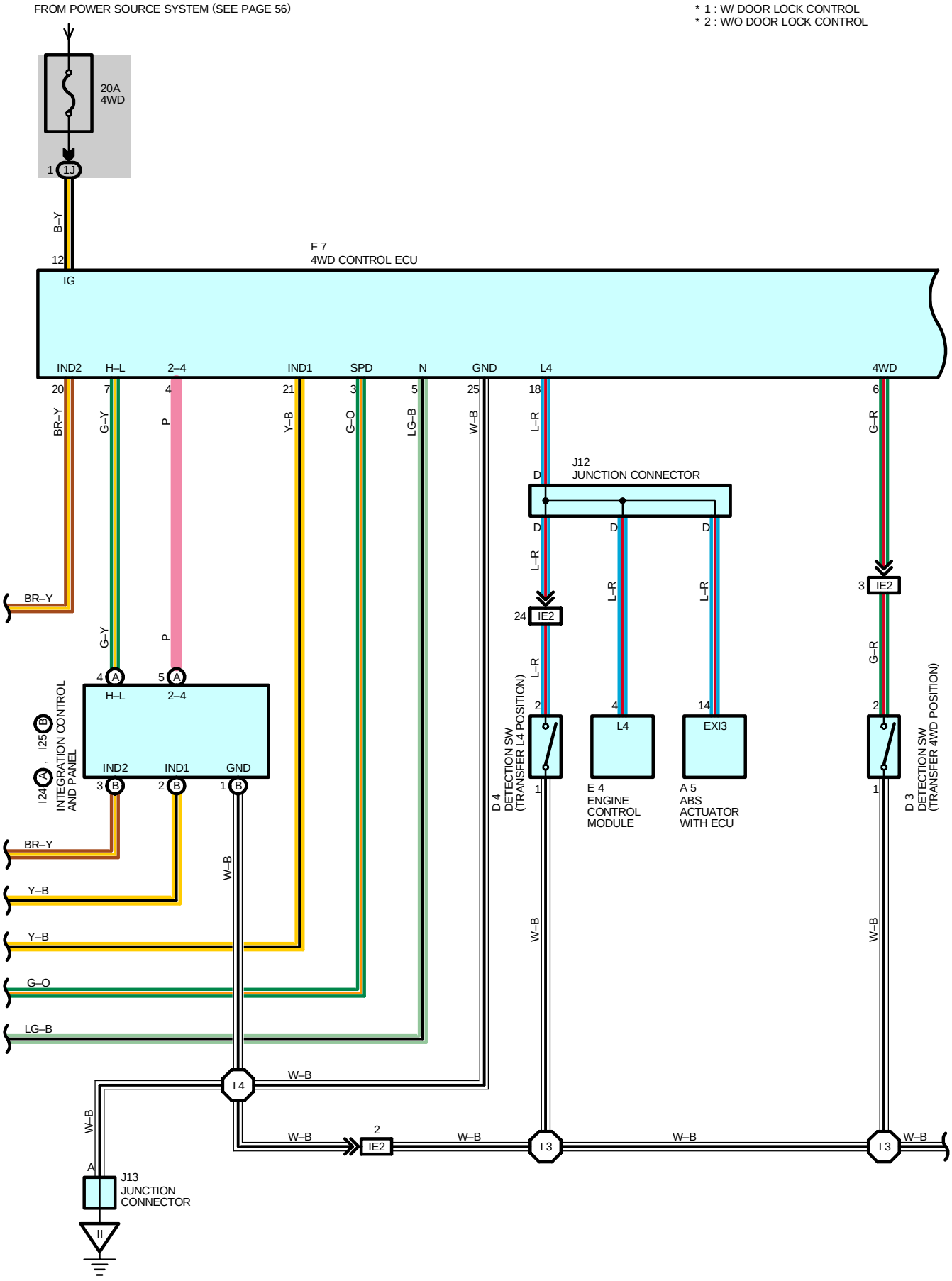
FROM POWER SOURCE SYSTEM (SEE PAGE 56)
* 1 : W/ DOOR LOCK CONTROL
* 2 : W/O DOOR LOCK CONTROL
20A
4WD
1
1J
B–Y
12
IG
F 7
4WD CONTROL ECU
IND2
H–L
2–4
IND1
SPD
N
GND
L4
4WD
20
7
4
21
3
5
25
18
6
BR–Y
G–Y
P
Y–B
G–O
LG–B
W–B
L–R
G–R
J12
JUNCTION CONNECTOR
D
24
IE2
3
2
4
14
L4
EXI3
4
5
A
H–L
2–4
B
I25
A
I24
INTEGRATION CONTROL
AND PANEL
IND2
IND1
GND
3
2
1
D 4
DETECTION SW
(TRANSFER L4 POSITION)
E 4
ENGINE
CONTROL
MODULE
A 5
ABS
ACTUATOR
WITH ECU
D 3
DETECTION SW
(TRANSFER 4WD POSITION)
I 4
I 3
A
J13
JUNCTION
CONNECTOR
II

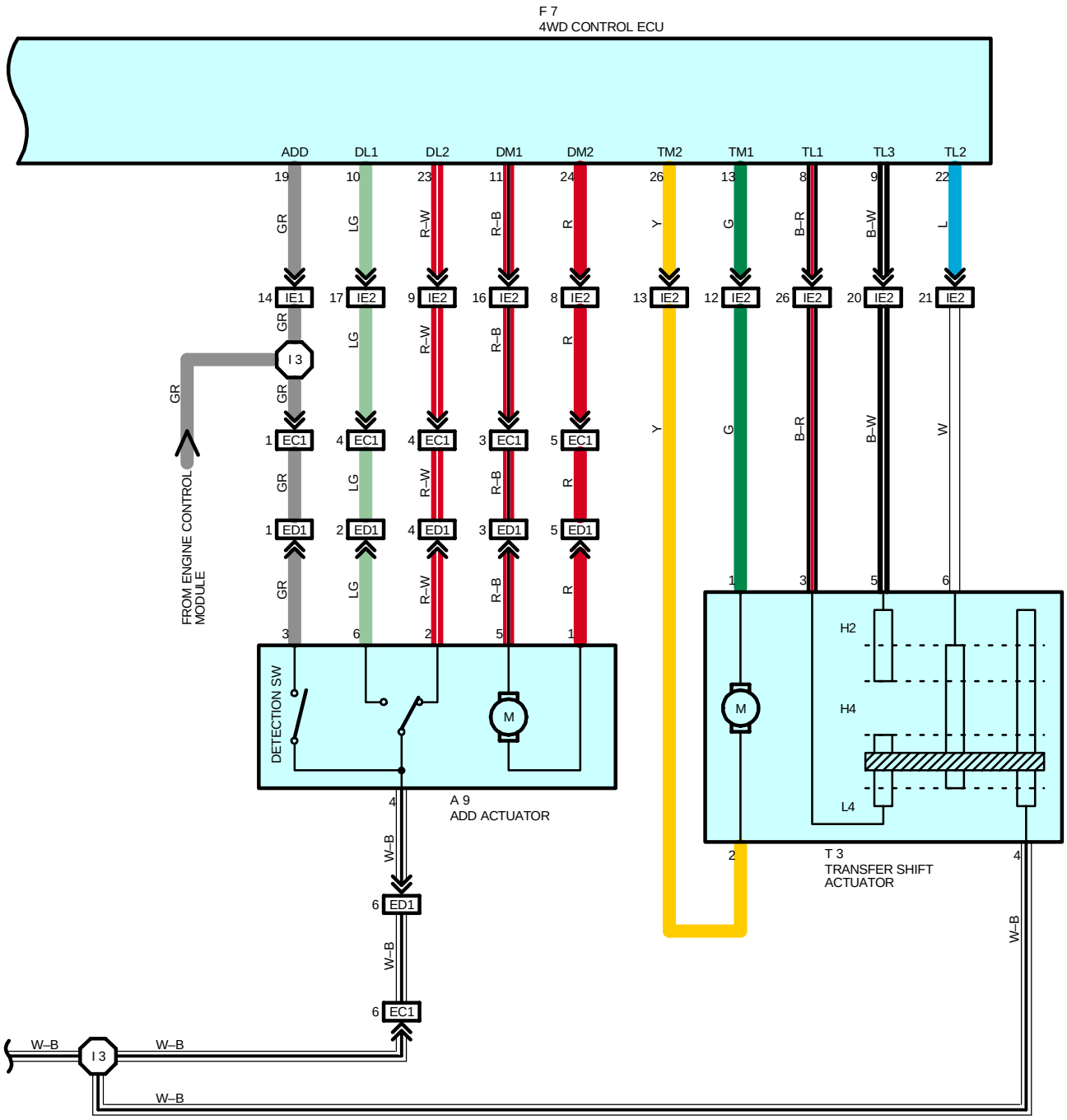
F 7
4WD CONTROL ECU
ADD
DL1
DL2
DM1
DM2
TM2
TM1
TL1
TL3
TL2
IE1
IE2
EC1
ED1
I 3
FROM ENGINE CONTROL MODULE
DETECTION SW
M
A 9
ADD ACTUATOR
T 3
TRANSFER SHIFT ACTUATOR
H2
H4
L4
W–B
GR
LG
R–W
R–B
R
Y
G
B–R
B–W
L
W

SYSTEM OUTLINE

In the conventional system, the 2–4 select SW and the transfer shift lever was used to shift the mode between H–L. In this system, the transfer shift lever is not used, and the H–L mode shift can be done by the transfer shift actuator.
The mode can be changed by the touch select 2–4 SW and touch select high–low in the integration control and panel.
The shift range is controlled according to the vehicle speed sensor and Park/Neutral position SW, and the indicator light is turned ON to inform the driver if any of the following conditions are detected:

* The shift is not completed even though 3 seconds have elapsed after transfer operation.
* The vehicle speed is above approximately 100 km/h (63 mph) when shifting from H2 to H4.
* The vehicle speed is below approximately 5 km/h (3 mph) or the A/T shift lever is in a position other than N position, when shifting from H4 to L4 or visa versa, and from L4 to H2.

TRANSFER OPERATION

H2 to H4
When the touch select 2–4 SW in the integration control and panel is turned ON, a signal is input into TERMINAL 4 of the 4WD control ECU.
The 4WD control ECU is activated by this, and the current flows from the 4WD control ECU TERMINAL 13 to transfer shift actuator TERMINAL 1 to motor to TERMINAL 2 to 4WD control ECU TERMINAL 26 to GROUND, and the transfer shifts to 4WD (H4 position.)
When the system shifts to 4WD, the detection SW (Transfer 4WD position) is turned ON, and the current flows from 4WD control ECU TERMINAL 11 to ADD actuator TERMINAL 5 to motor to TERMINAL 1 to 4WD control ECU TERMINAL 24 to GROUND, and the ADD actuator is activated, and the ADD is connected. When the ADD is connected, the detection SW (ADD position SW) is turned ON, and the 4HI Indicator light comes ON.
H4 to H2
When the touch select 2–4 SW in the integration control and panel is turned OFF, a signal is input into TERMINAL 4 of the 4WD control ECU.
The 4WD control ECU is activated by this, and the current flows from the 4WD control ECU TERMINAL 26 to transfer shift actuator TERMINAL 2 to motor to TERMINAL 1 to 4WD control ECU TERMINAL 13 to GROUND, and the transfer shifts to 2WD (H2 position.)
When the system shifts to 2WD, the detection SW (Transfer 4WD position) is turned OFF, and the current flows from 4WD control ECU TERMINAL 24 to ADD actuator TERMINAL 1 to motor to TERMINAL 5 to 4WD control ECU TERMINAL 11 to GROUND, and the ADD actuator is activated, and the ADD is disconnected. When the ADD is disconnected, the detection SW (ADD position SW) is turned OFF, and the 4HI indicator Light turns OFF.
H4 to L4
When the touch select high–low SW in the integration control and panel is turned ON, a signal is input into TERMINAL 7 of the 4WD control ECU.
The 4WD control ECU is activated by this, and the current flows from the 4WD control ECU TERMINAL 13 to transfer shift actuator TERMINAL 1 to motor to TERMINAL 2 to 4WD control ECU TERMINAL 26 to GROUND, and the transfer shifts to 4WD LO position (L4 position.)
The 4HI Indicator is turned OFF and the 4LO indicator is turned ON.
L4 to H4
When the touch select high–low SW in the integration control and panel is turned OFF, a signal is input into TERMINAL 7 of the 4WD control ECU.
The 4WD control ECU is activated by this, and the current flows from the 4WD control ECU TERMINAL 26 to transfer shift actuator TERMINAL 2 to motor to TERMINAL 1 to 4WD control ECU TERMINAL 13 to GROUND, and the transfer shifts to 4WD HI position (H4 Position.)
The 4HI indicator is turned ON and the 4LO indicator is turned OFF.
The shift is not completed even though 3 seconds have elapsed after transfer operation.

* The vehicle speed is above approximately 100 km/h (63 mph) when shifting from H2 to H4.
* The vehicle speed is below approximately 5 km/h (3 mph) or the A/T Shift Lever is in a position other than N position, when shifting from H4 to L4 or visa versa, and from L4 to H2.

L4 to H2
When the touch select 2–4 SW in the integration control and panel is turned OFF, a signal is input into TERMINAL 4 of the 4WD control ECU.
The 4WD control ECU is activated by this, and the current flows from the 4WD control ECU TERMINAL 26 to transfer shift actuator TERMINAL 2 to motor to TERMINAL 1 to 4WD control ECU TERMINAL 13 to GROUND, and the detection SW (Transfer L4 position) is turned OFF.
Furthermore, the motor rotates to shift the transfer to 2WD (H2 position.)
When the system shifts to 2WD, the detection SW (Transfer 4WD position) is turned OFF, and the current flows from 4WD control ECU TERMINAL 24 to ADD actuator TERMINAL 1 to motor to TERMINAL 5 to 4WD control ECU TERMINAL 11 to GROUND, and the ADD actuator is activated, and the ADD is disconnected. When the ADD is disconnected, the detection SW (ADD position SW) is turned OFF, and the 4LO indicator light turns OFF.

H2 to L4
When the touch select 2–4 SW in the integration control and panel is turned ON, and the touch select high–low SW is turned ON, a signal is input into TERMINAL 4 of the 4WD control ECU.
The 4WD control ECU is activated by this, and the current flows from the 4WD control ECU TERMINAL 13 to transfer shift actuator TERMINAL 1 to motor to TERMINAL 2 to 4WD control ECU TERMINAL 26 to GROUND, and the transfer shifts to 4WD (H4 position.)
When the system shifts to 4WD, the detection SW (Transfer 4WD position) is turned ON, and the current flows from 4WD control ECU TERMINAL 11 to ADD actuator TERMINAL 5 to motor to TERMINAL 1 to 4WD control ECU TERMINAL 24 to GROUND, and the ADD actuator is activated, and the ADD is connected. Then a signal is input into TERMINAL 7 of the 4WD control ECU and the 4WD control ECU is activated by this, so the current flows from the 4WD control ECU TERMINAL 13 to transfer shift actuator TERMINAL 1 to motor to TERMINAL 2 to 4WD control ECU TERMINAL 26 to GROUND. The transfer shifts to 4WD LO position (L4 position), and the 4LO indicator light comes ON.

SERVICE HINTS

F7 4WD CONTROL ECU

12–GROUND : Approx. **12** volts with ignition SW at **ON** or **ST** position
25–GROUND : Always continuity
3–GROUND : **4** pulses with **1** rotation
4–GROUND : **2** volts or less with touch select 2–4 SW on
18–GROUND : **2** volts or less with detection SW (Transfer L4 position) on and transfer shift lever at **L4** position

I24 (A), I25 (B) INTEGRATION CONTROL AND PANEL

(A) 5–(B) 1 : Closed with touch select 2–4 SW on

P1 NEUTRAL POSITION SW [PARK/NEUTRAL POSITION SW]

3–5 : Closed with A/T shift lever at **N** position

○ : PARTS LOCATION

Code		See Page	Code		See Page	Code	See Page
A5		30 (2UZ–FE)	D4		30 (2UZ–FE)	J9	35
A9		30 (2UZ–FE)	D8		34	J11	35
C11	A	34	E4		34	J12	35
C12	B	34	F7		35	J13	35
C13	C	34	I24	A	35	P1	31 (2UZ–FE)
C14	D	34	I25	B	35	T3	31 (2UZ–FE)
D3		30 (2UZ–FE)	J8		35	V2	31 (2UZ–FE)

⬭ : JUNCTION BLOCK AND WIRE HARNESS CONNECTOR

Code	See Page	Junction Block and Wire Harness (Connector Location)
1F	22 (*2)	Cowl Wire and Driver Side J/B (Lower Finish Panel)
	26 (*1)	
1G	22 (*2)	
	26 (*1)	
1J	22 (*2)	
	26 (*1)	

▭ : CONNECTOR JOINING WIRE HARNESS AND WIRE HARNESS

Code	See Page	Joining Wire Harness and Wire Harness (Connector Location)
EC1	40 (2UZ–FE)	Engine No.2 Wire and Engine Wire (Near the Starter)
ED1	40 (2UZ–FE)	Engine No.2 Wire and Differential Wire (Near the Transmission)
IE1	46	Engine Wire and Cowl Wire (Right Side of Instrument Panel)
IE2		

* 1 : w/ Daytime Running Light * 2 : w/o Daytime Running Light * 3 : Bench Seat * 4 : Separate Seat, Captain Seat (w/o Power Seat)



: GROUND POINTS

Code	See Page	Ground Points Location
IH	44	Right Kick Panel
II		



: SPLICE POINTS

Code	See Page	Wire Harness with Splice Points	Code	See Page	Wire Harness with Splice Points
I3	46	Engine Wire	I4	46	Cowl Wire

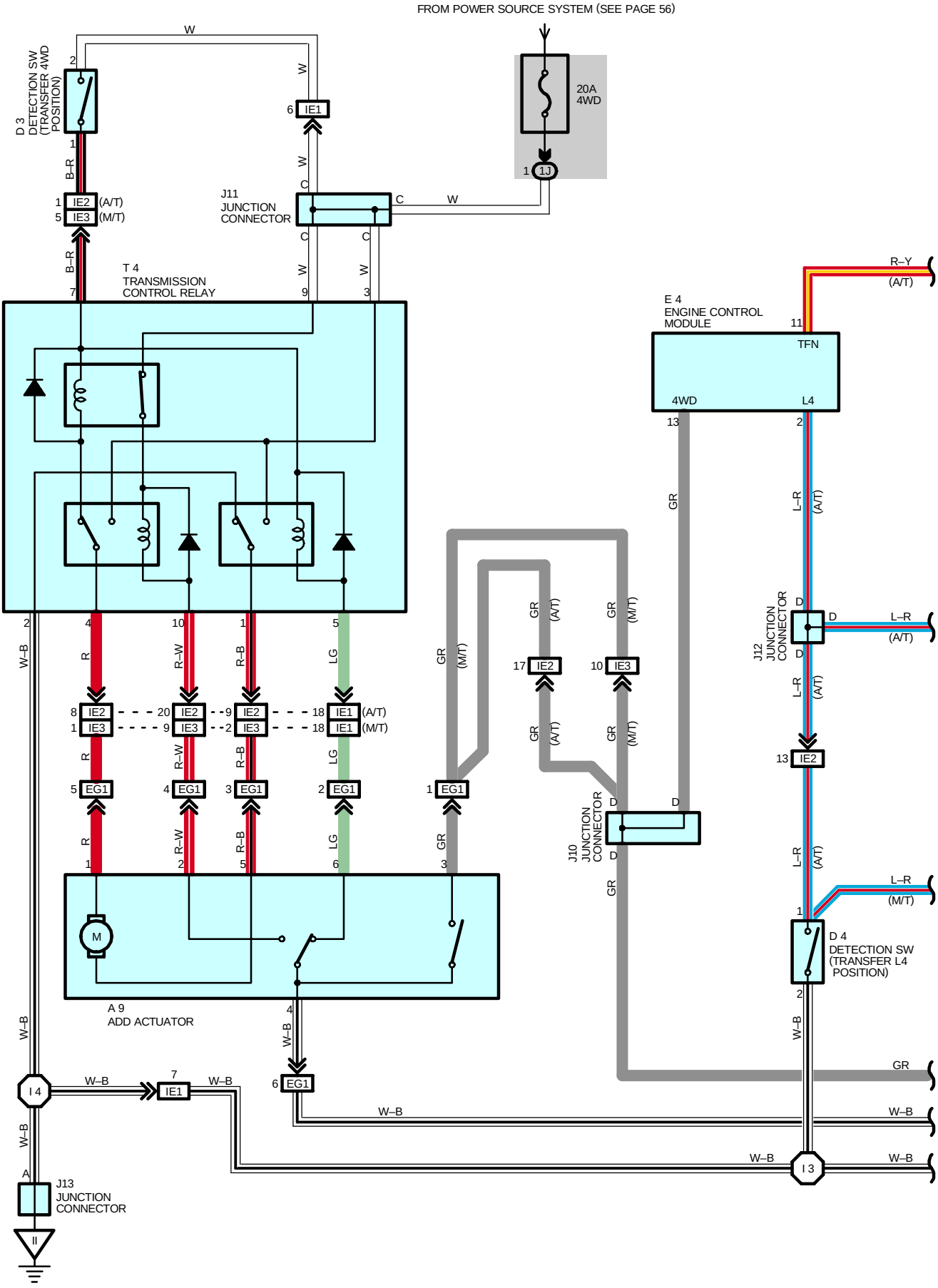
FROM POWER SOURCE SYSTEM (SEE PAGE 56)
D 3
DETECTION SW
(TRANSFER 4WD
POSITION)
W
B–R
IE2 (A/T)
IE3 (M/T)
IE1
20A
4WD
1J
J11
JUNCTION
CONNECTOR
T 4
TRANSMISSION
CONTROL RELAY
E 4
ENGINE CONTROL
MODULE
TFN
4WD
L4
R–Y
(A/T)
L–R
GR
R
R–W
R–B
LG
EG1
M
A 9
ADD ACTUATOR
J10
JUNCTION
CONNECTOR
J12
JUNCTION
CONNECTOR
D 4
DETECTION SW
(TRANSFER L4
POSITION)
W–B
I 4
I 3
J13
JUNCTION
CONNECTOR

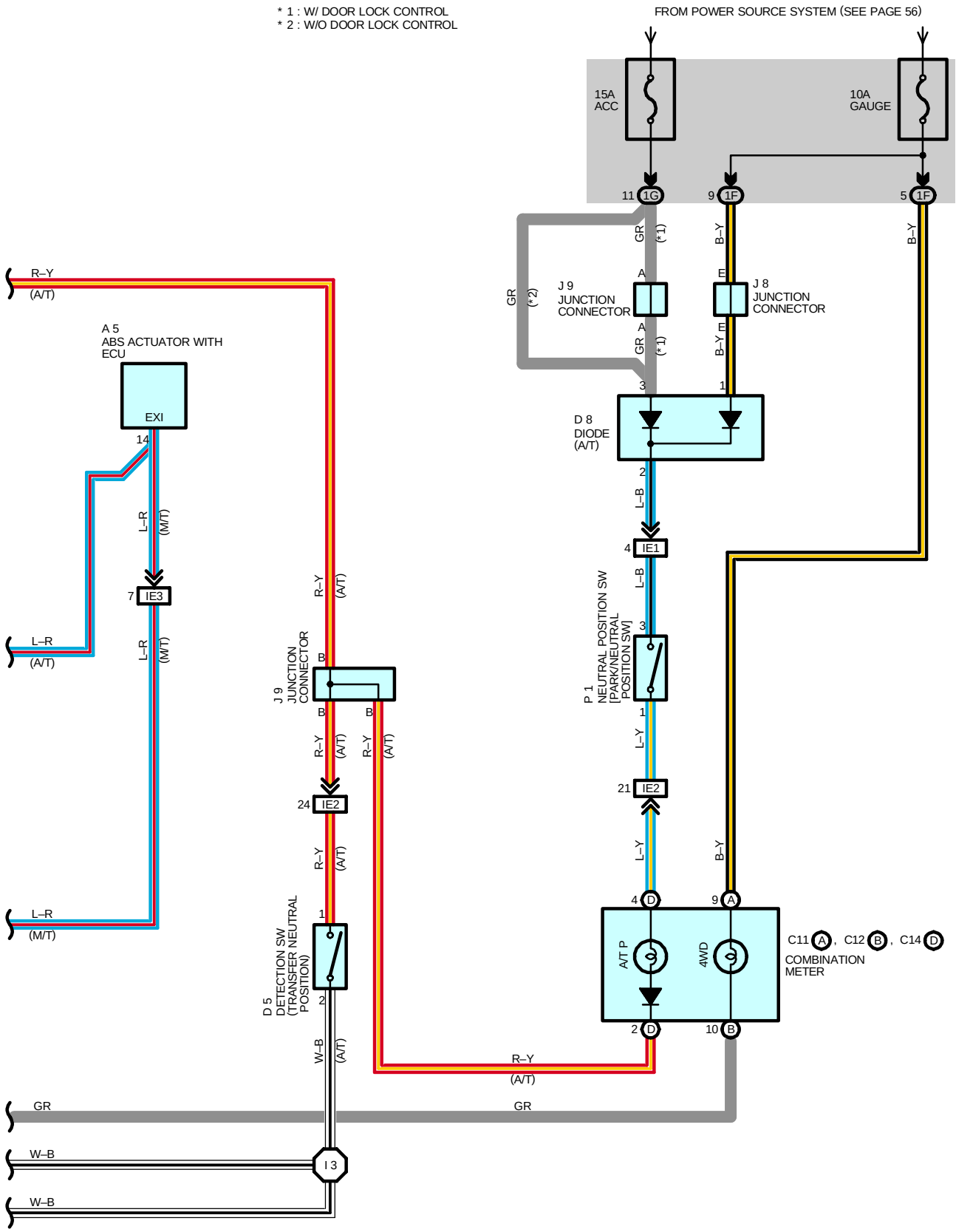
* 1 : W/ DOOR LOCK CONTROL
* 2 : W/O DOOR LOCK CONTROL
FROM POWER SOURCE SYSTEM (SEE PAGE 56)
15A ACC
10A GAUGE
11 1G
9 1F
5 1F
GR (*1)
B–Y
GR (*2)
J 9 JUNCTION CONNECTOR
J 8 JUNCTION CONNECTOR
A 5 ABS ACTUATOR WITH ECU
EXI
14
R–Y (A/T)
L–R (M/T)
L–R (A/T)
7 IE3
D 8 DIODE (A/T)
3
2
L–B
4 IE1
P 1 NEUTRAL POSITION SW [PARK/NEUTRAL POSITION SW]
1
L–Y
21 IE2
24 IE2
J 9 JUNCTION CONNECTOR
D 5 DETECTION SW (TRANSFER NEUTRAL POSITION)
W–B
I 3
4 D
9 A
2 D
10 B
A/T P
4WD
C11 A , C12 B , C14 D
COMBINATION METER

4WD (5VZ–FE)

SERVICE HINTS

P1 NEUTRAL POSITION SW [PARK/NEUTRAL POSITION SW]

3–1 : Closed with A/T shift lever at **P** position

D5 DETECTION SW (TRANSFER NEUTRAL POSITION)

1–2 : Closed with transfer position at **N** position

: PARTS LOCATION

Code	See Page	Code	See Page	Code	See Page
A5	32 (5VZ–FE)	D4	32 (5VZ–FE)	J10	35
A9	32 (5VZ–FE)	D5	32 (5VZ–FE)	J11	35
C11 A	34	D8	34	J12	35
C12 B	34	E4	34	J13	35
C14 D	34	J8	35	P1	33 (5VZ–FE)
D3	32 (5VZ–FE)	J9	35	T4	35

: JUNCTION BLOCK AND WIRE HARNESS CONNECTOR

Code	See Page	Junction Block and Wire Harness (Connector Location)
1F	22 (*2)	Cowl Wire and Driver Side J/B (Lower Finish Panel)
	26 (*1)	
1G	22 (*2)	
	26 (*1)	
1J	22 (*2)	
	26 (*1)	

: CONNECTOR JOINING WIRE HARNESS AND WIRE HARNESS

Code	See Page	Joining Wire Harness and Wire Harness (Connector Location)
EG1	42 (5VZ–FE)	Engine Wire and Differential Wire (Front Differential Upper Side)
IE1	46	Engine Wire and Cowl Wire (Right Side of Instrument Panel)
IE2		
IE3		

: GROUND POINTS

Code	See Page	Ground Points Location
II	44	Right Kick Panel

: SPLICE POINTS

Code	See Page	Wire Harness with Splice Points	Code	See Page	Wire Harness with Splice Points
I3	46	Engine Wire	I4	46	Cowl Wire

* 1 : w/ Daytime Running Light * 2 : w/o Daytime Running Light * 3 : Bench Seat * 4 : Separate Seat, Captain Seat (w/o Power Seat)

DOOR LOCK CONTROL (w/ DAYTIME RUNNING LIGHT)

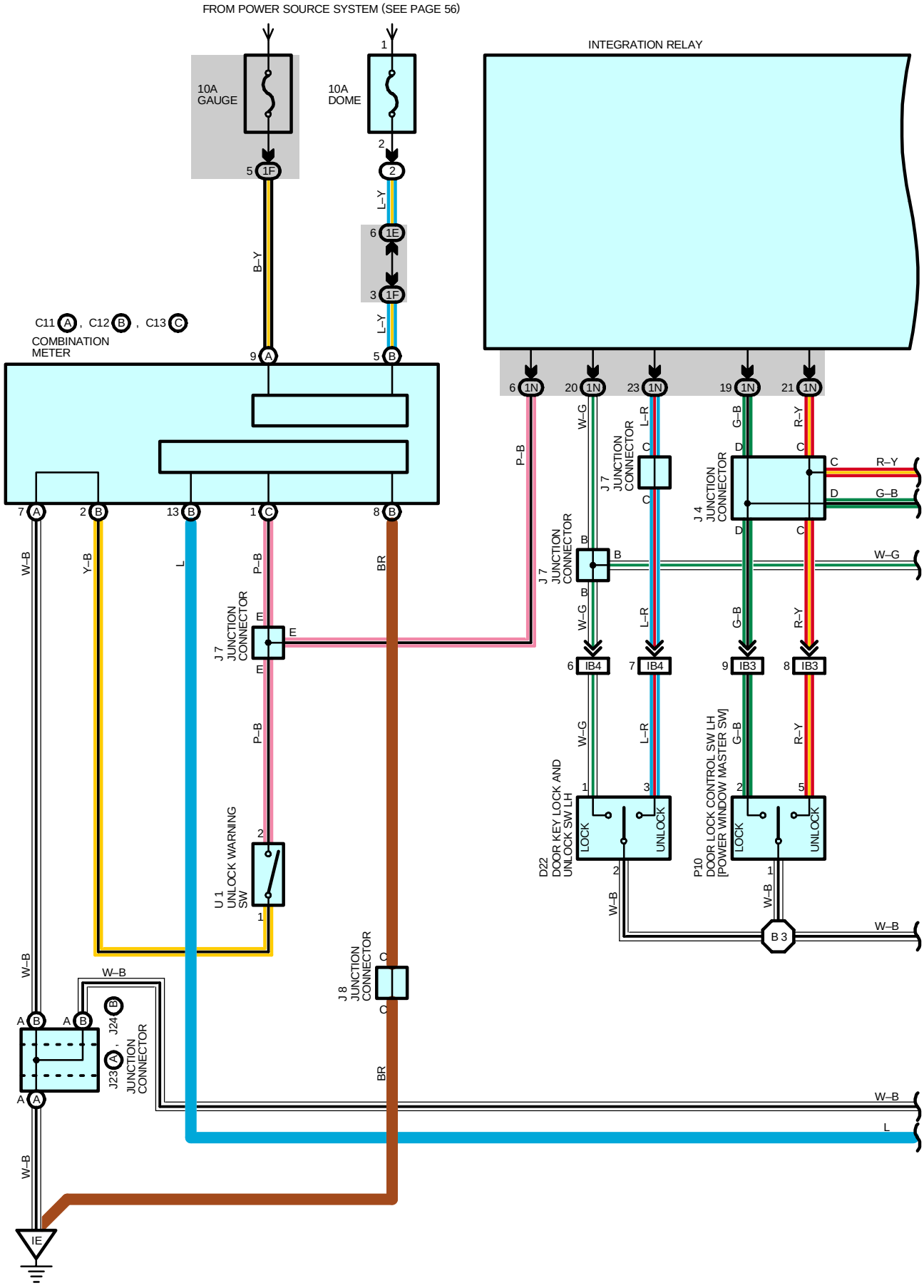

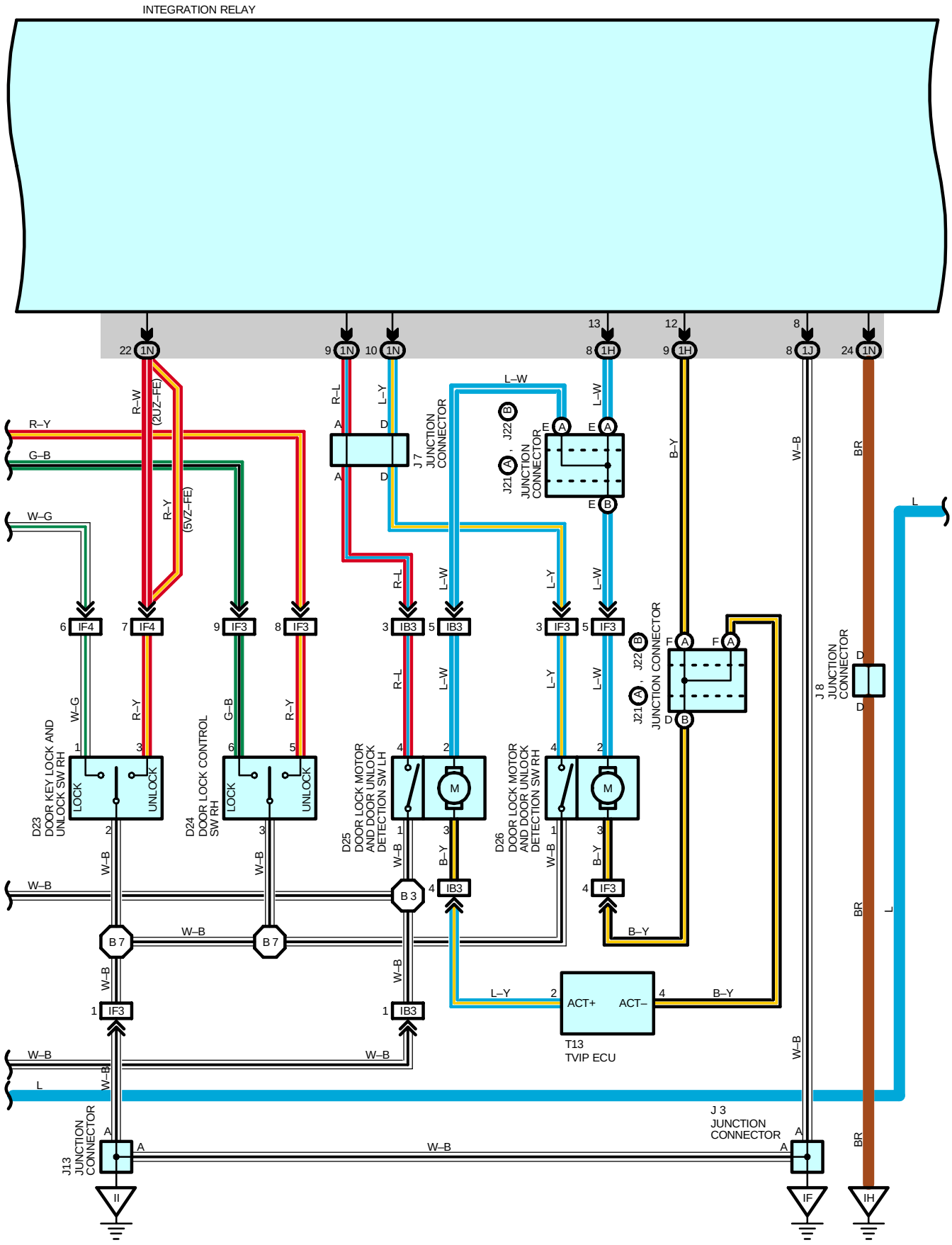
INTEGRATION RELAY
22 1N
9 1N
10 1N
13 8 1H
12 9 1H
8 8 1J
24 1N
R–W
(2UZ–FE)
R–Y
(5VZ–FE)
R–Y
G–B
W–G
R–L
L–Y
L–W
B–Y
W–B
BR
L
J 7 JUNCTION CONNECTOR
J21 , J22 JUNCTION CONNECTOR
J21 , J22 JUNCTION CONNECTOR
J 8 JUNCTION CONNECTOR
6 IF4
7 IF4
9 IF3
8 IF3
3 IB3
5 IB3
3 IF3
5 IF3
D23 DOOR KEY LOCK AND UNLOCK SW RH
D24 DOOR LOCK CONTROL SW RH
D25 DOOR LOCK MOTOR AND DOOR UNLOCK DETECTION SW LH
D26 DOOR LOCK MOTOR AND DOOR UNLOCK DETECTION SW RH
LOCK
UNLOCK
M
B 3
B 7
B 7
IB3
IF3
IB3
ACT+
ACT–
T13 TVIP ECU
J13 JUNCTION CONNECTOR
J 3 JUNCTION CONNECTOR
II
IF
IH

DOOR LOCK CONTROL (w/ DAYTIME RUNNING LIGHT)

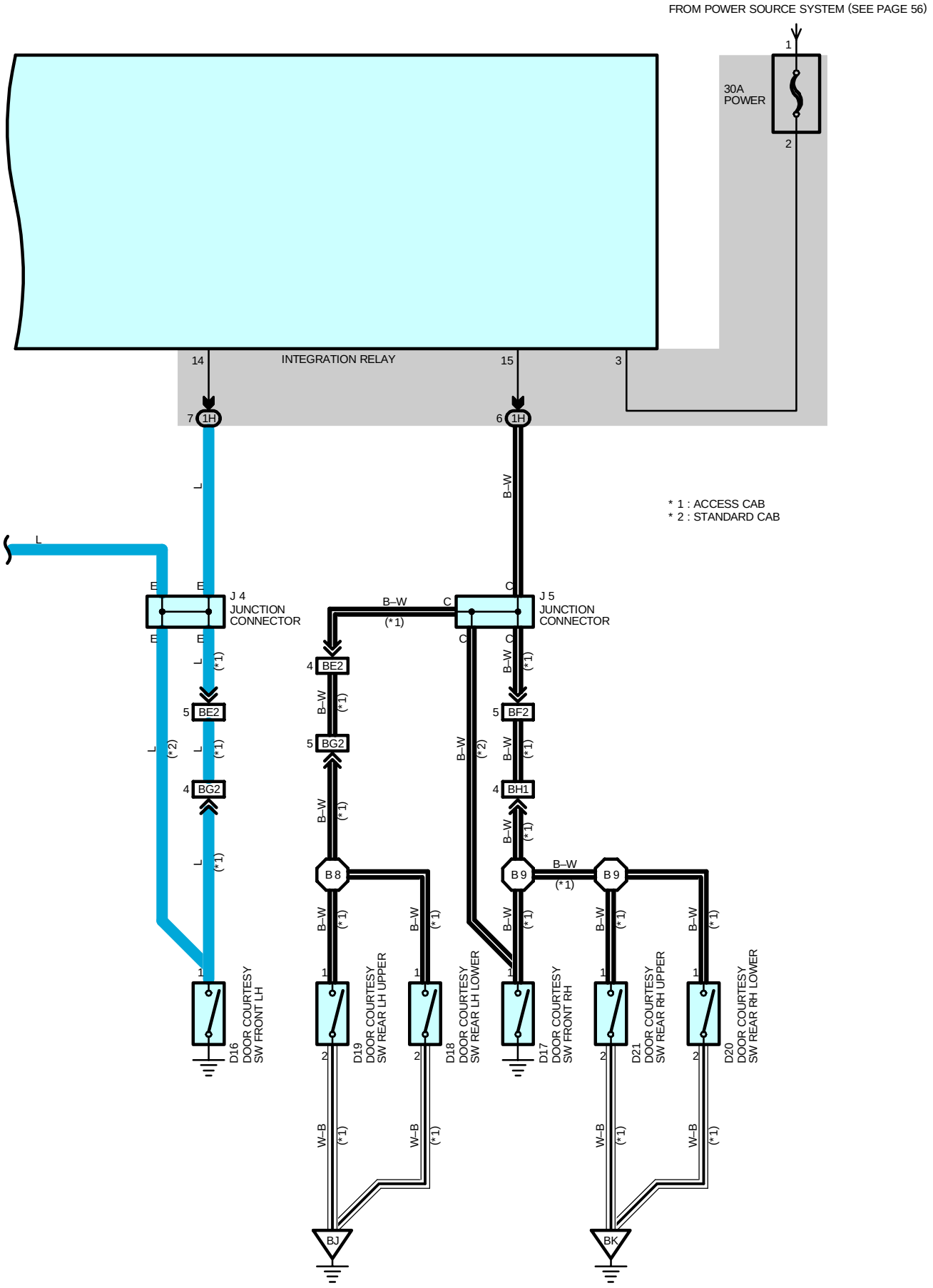

SYSTEM OUTLINE

Current always flows to TERMINAL 3 of the integration relay through the POWER fuse.

1. MANUAL LOCK OPERATION

To push the door lock control SW or door key lock and unlock SW to LOCK position, a lock signal is input to the integration relay and causes the relay to function. Current flows from TERMINAL 3 of the relay to TERMINAL 13 to TERMINAL 2 of the door lock motors to TERMINAL 3 to TERMINAL 12 of the relay to TERMINAL 8 to GROUND and the door lock motor causes the door to lock.

2. MANUAL UNLOCK OPERATION

To push the door lock control SW or door key lock and unlock SW to UNLOCK position, an unlock signal is input to the integration relay and causes the relay to function. Current flows from TERMINAL 3 of the relay to TERMINAL 12 to TERMINAL 3 of the door lock motors to TERMINAL 2 to TERMINAL 13 of the relay to TERMINAL 8 to GROUND and the door lock motor causes the door to unlock.

3. DOUBLE OPERATION UNLOCK OPERATION

When the door key lock and unlock SW LH is turned to unlock position, only the front LH door is mechanically unlocked. Turning the door key lock and unlock SW LH to the unlock side causes a signal to be input to the relay, and if the signal is input again within 3 seconds by turning the door key lock and unlock SW LH to the unlock side again, current flows from TERMINAL 12 of the integration relay to TERMINAL 3 of the door lock motors, TERMINAL 2 to TERMINAL 13 of the integration relay to TERMINAL 8 to GROUND, causing the door lock motors to operate and unlock the doors.

4. KEY CONFINE PREVENTION FUNCTION

* Operating door lock knob (In door lock motor operation)
  With ignition key in cylinder (Unlock warning SW on), when any door is opened and locked using door lock knob (Door lock motor), the door is locked once but each door is unlocked soon by the function of the integration relay. As a result, current flows from TERMINAL 3 of the relay to TERMINAL 12 to TERMINAL 3 of the door lock motors to TERMINAL 2 to TERMINAL 13 of the relay to TERMINAL 8 to GROUND and causes all the doors to unlock.
* Operating door lock control SW or door key lock and unlock SW
  With ignition key in cylinder (Unlock warning SW on), when any door is opened and locked using the door lock control SW or door key lock and unlock SW, all doors are locked once but each door is unlocked by the function of the SW contained in motor, which inputs the signal to the integration relay. According to this input signal, current flows from TERMINAL 3 of the relay to TERMINAL 12 to TERMINAL 3 of the door lock motors to TERMINAL 2 to TERMINAL 13 of the relay to TERMINAL 8 to GROUND and causes all the doors to unlock.

SERVICE HINTS

INTEGRATION RELAY

8–GROUND : Always continuity
3–GROUND : Always approx. **12** volts
12–GROUND : Approx. **12** volts for **0.2** seconds with following operations
* Door lock control SW unlocked
* Door lock control SW locked with ignition key in cylinder and LH or RH door open (Ignition key reminder function)
* Door lock knob locked with ignition key in cylinder and LH or RH door open. (Ignition key reminder function)
* Unlocking the LH, RH door cylinder with key

13–GROUND : Approx. **12** volts for **0.2** seconds with following operations
* Door lock control SW locked
* Locking the LH, RH door cylinder with key

14–GROUND : Continuity with front LH door open
15–GROUND : Continuity with front RH door open (Standard cab)
15–GROUND : Continuity with front RH, rear LH, RH door open (Access cab)

D16, D17 DOOR COURTESY SW FRONT LH, RH

1–GROUND : Closed with door open

D22, D23 DOOR KEY LOCK AND UNLOCK SW LH, RH

1–2 : Closed with door lock cylinder locked with key
3–2 : Closed with door lock cylinder unlocked with key

D25, D26 DOOR LOCK MOTOR AND DOOR UNLOCK DETECTION SW LH, RH

4–1 : Closed with door lock knob **UNLOCK** position

U1 UNLOCK WARNING SW

1–2 : Closed with key in cylinder

DOOR LOCK CONTROL (w/ DAYTIME RUNNING LIGHT)

: PARTS LOCATION

Code	See Page	Code	See Page	Code	See Page
C11 A	34	D22	37 (Standard Cab)	J7	35
C12 B	34	D23	36 (Access Cab)	J8	35
C13 C	34		37 (Standard Cab)	J13	35
D16	36 (Access Cab)	D24	36 (Access Cab)	J21 A	35
	37 (Standard Cab)		37 (Standard Cab)	J22 B	35
D17	36 (Access Cab)	D25	36 (Access Cab)	J23 A	35
	37 (Standard Cab)		37 (Standard Cab)	J24 B	35
D18	36 (Access Cab)	D26	36 (Access Cab)	P10	36 (Access Cab)
D19	36 (Access Cab)		37 (Standard Cab)		37 (Standard Cab)
D20	36 (Access Cab)	J3	35	T13	35
D21	36 (Access Cab)	J4	35	U1	35
D22	36 (Access Cab)	J5	35		

: RELAY BLOCKS

Code	See Page	Relay Blocks (Relay Block Location)
2	21	Engine Room R/B (Engine Compartment Left)

: JUNCTION BLOCK AND WIRE HARNESS CONNECTOR

Code	See Page	Junction Block and Wire Harness (Connector Location)
1E	26 (*1)	Engine Room Main Wire and Driver Side J/B (Lower Finish Panel)
1F	26 (*1)	Cowl Wire and Driver Side J/B (Lower Finish Panel)
1H		
1J		
1N	27 (*1)	

: CONNECTOR JOINING WIRE HARNESS AND WIRE HARNESS

Code	See Page	Joining Wire Harness and Wire Harness (Connector Location)
IB3	44	Front Door LH Wire and Cowl Wire (Left Kick Panel)
IB4		
IF3	46	Front Door RH Wire and Cowl Wire (Right Kick Panel)
IF4		
BE2	48 (Access Cab)	Floor No.2 Wire and Cowl Wire (Center of Left Rocker Panel)
BF2	48 (Access Cab)	Floor No.1 Wire and Cowl Wire (Center of Right Rocker Panel)
BG2	48 (Access Cab)	Floor No.2 Wire and Rear Door No.1 Wire LH (Under the Left Quarter Panel)
BH1	48 (Access Cab)	Floor No.1 Wire and Rear Door No.1 Wire RH (Under the Right Quarter Panel)

: GROUND POINTS

Code	See Page	Ground Points Location
IE	44	Left Kick Panel
IF		
IH	44	Right Kick Panel
II		
BJ	48 (Access Cab)	Inside of Rear Door LH
BK	48 (Access Cab)	Inside of Rear Door RH

: SPLICE POINTS

Code	See Page	Wire Harness with Splice Points	Code	See Page	Wire Harness with Splice Points
B3	48 (Access Cab)	Front Door LH Wire	B7	50 (Standard Cab)	Front Door RH Wire
	50 (Standard Cab)		B8	48 (Access Cab)	Rear Door No.1 Wire LH
B7	48 (Access Cab)	Front Door RH Wire	B9	48 (Access Cab)	Rear Door No.1 Wire RH

* 1 : w/ Daytime Running Light * 2 : w/o Daytime Running Light * 3 : Bench Seat * 4 : Separate Seat, Captain Seat (w/o Power Seat)

DOOR LOCK CONTROL (w/o DAYTIME RUNNING LIGHT)

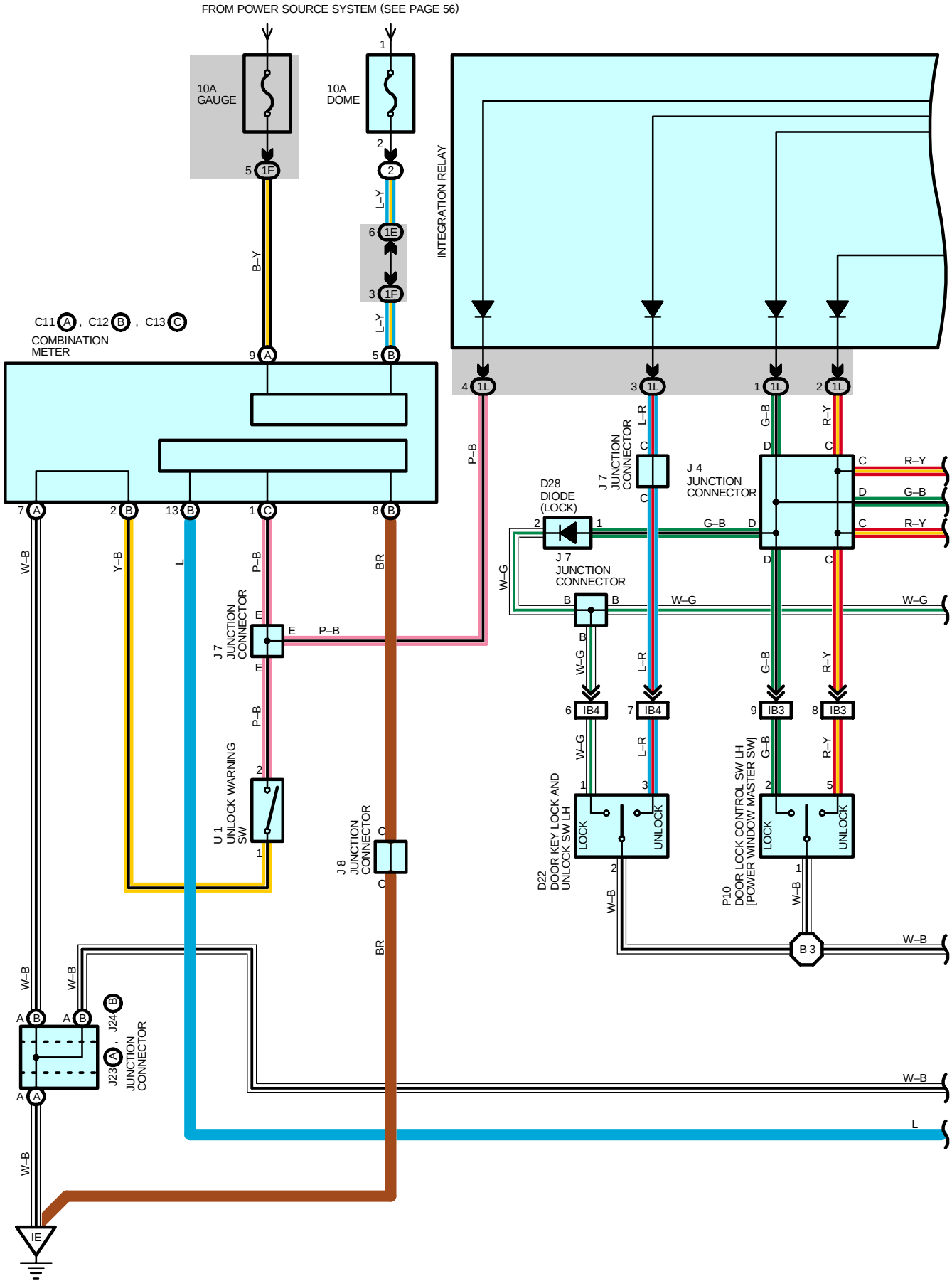

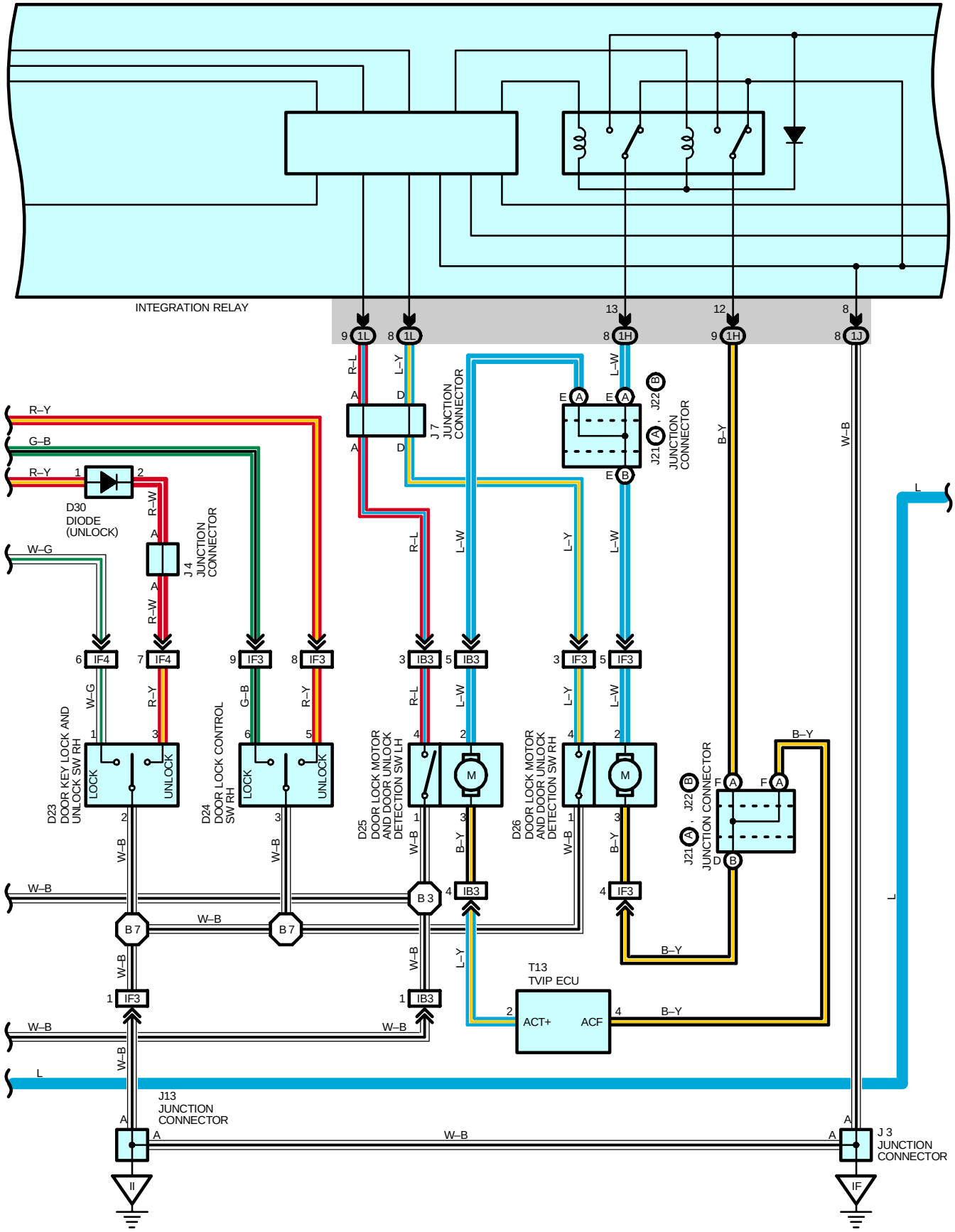
INTEGRATION RELAY
9 1L
8 1L
13
8 1H
12
9 1H
8
8 1J
R–L
L–Y
L–W
J 7 JUNCTION CONNECTOR
J21 , J22 JUNCTION CONNECTOR
B–Y
W–B
R–Y
G–B
W–G
D30 DIODE (UNLOCK)
R–W
J 4 JUNCTION CONNECTOR
6 IF4
7 IF4
9 IF3
8 IF3
3 IB3
5 IB3
3 IF3
5 IF3
D23 DOOR KEY LOCK AND UNLOCK SW RH
LOCK
UNLOCK
D24 DOOR LOCK CONTROL SW RH
D25 DOOR LOCK MOTOR AND DOOR UNLOCK DETECTION SW LH
D26 DOOR LOCK MOTOR AND DOOR UNLOCK DETECTION SW RH
M
B 3
B 7
T13 TVIP ECU
ACT+
ACF
J13 JUNCTION CONNECTOR
J 3 JUNCTION CONNECTOR
L
II
IF

DOOR LOCK CONTROL (w/o DAYTIME RUNNING LIGHT)

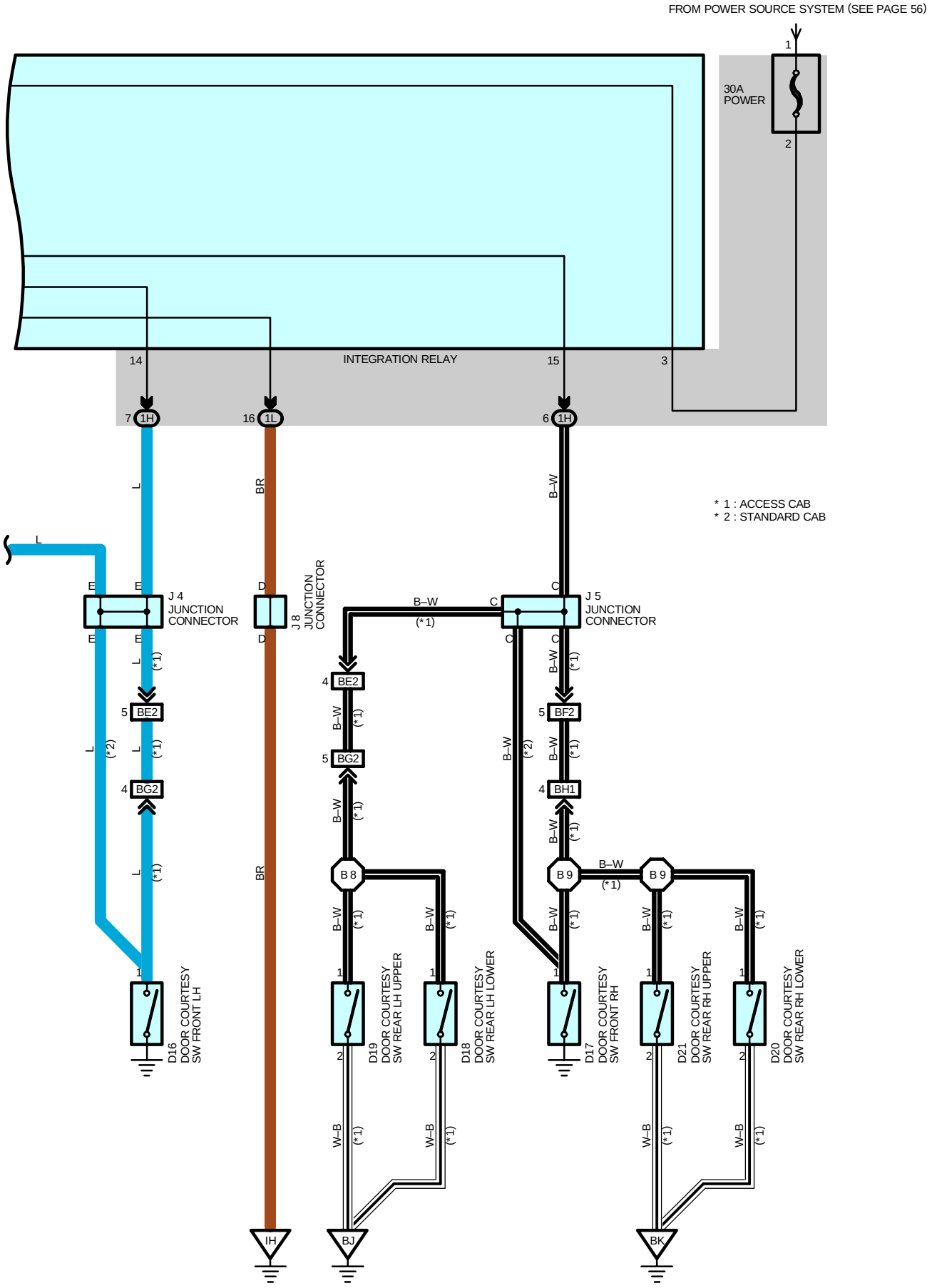

SYSTEM OUTLINE

Current always flows to TERMINAL 3 of the integration relay through the POWER fuse.

1. MANUAL LOCK OPERATION

To push the door lock control SW or door key lock and unlock SW to LOCK position, a lock signal is input to the integration relay and causes the relay to function. Current flows from TERMINAL 3 of the relay to TERMINAL 13 to TERMINAL 2 of the door lock motors to TERMINAL 3 to TERMINAL 12 of the relay to TERMINAL 8 to GROUND and the door lock motor causes the door to lock.

2. MANUAL UNLOCK OPERATION

To push the door lock control SW or door key lock and unlock SW to UNLOCK position, an unlock signal is input to the integration relay and causes the relay to function. Current flows from TERMINAL 3 of the relay to TERMINAL 12 to TERMINAL 3 of the door lock motors to TERMINAL 2 to TERMINAL 13 of the relay to TERMINAL 8 to GROUND and the door lock motor causes the door to unlock.

3. DOUBLE OPERATION UNLOCK OPERATION

When the door key lock and unlock SW LH is turned to unlock position, only the front LH door is mechanically unlocked. Turning the door key lock and unlock SW LH to the unlock side causes a signal to be input to the relay, and if the signal is input again within 3 seconds by turning the door key lock and unlock SW LH to the unlock side again, current flows from TERMINAL 12 of the integration relay to TERMINAL 3 of the door lock motors, TERMINAL 2 to TERMINAL 13 of the integration relay to TERMINAL 8 to GROUND, causing the door lock motors to operate and unlock the doors.

4. KEY CONFINE PREVENTION FUNCTION

* Operating door lock knob (In door lock motor operation)
  With ignition key in cylinder (Unlock warning SW on), when any door is opened and locked using door lock knob (Door lock motor), the door is locked once but each door is unlocked soon by the function of the integration relay. As a result, current flows from TERMINAL 3 of the relay to TERMINAL 12 to TERMINAL 3 of the door lock motors to TERMINAL 2 to TERMINAL 13 of the relay to TERMINAL 8 to GROUND and causes all the doors to unlock.
* Operating door lock control SW or door key lock and unlock SW
  With ignition key in cylinder (Unlock warning SW on), when any door is opened and locked using the door lock control SW or door key lock and unlock SW, all doors are locked once but each door is unlocked by the function of the SW contained in motor, which inputs the signal to the integration relay. According to this input signal, current flows from TERMINAL 3 of the relay to TERMINAL 12 to TERMINAL 3 of the door lock motors to TERMINAL 2 to TERMINAL 13 of the relay to TERMINAL 8 to GROUND and causes all the doors to unlock.

SERVICE HINTS

INTEGRATION RELAY

8–GROUND : Always continuity
3–GROUND : Always approx. **12** volts
12–GROUND : Approx. **12** volts for **0.2** seconds with following operations
* Door lock control SW unlocked
* Door lock control SW locked with ignition key in cylinder and LH or RH door open (Ignition key reminder function)
* Door lock knob locked with ignition key in cylinder and LH or RH door open. (Ignition key reminder function)
* Unlocking the LH, RH door cylinder with key

13–GROUND : Approx. **12** volts for **0.2** seconds with following operations
* Door lock control SW locked
* Locking the LH, RH door cylinder with key

14–GROUND : Continuity with front LH door open
15–GROUND : Continuity with front RH door open (Standard cab)
15–GROUND : Continuity with front RH, rear LH, RH door open (Access cab)

D16, D17 DOOR COURTESY SW FRONT LH, RH

1–GROUND : Closed with door open

D22, D23 DOOR KEY LOCK AND UNLOCK SW LH, RH

1–2 : Closed with door lock cylinder locked with key
3–2 : Closed with door lock cylinder unlocked with key

D25, D26 DOOR LOCK MOTOR AND DOOR UNLOCK DETECTION SW LH, RH

4–1 : Closed with door lock knob **UNLOCK** position

U1 UNLOCK WARNING SW

1–2 : Closed with key in cylinder

DOOR LOCK CONTROL (w/o DAYTIME RUNNING LIGHT)

: PARTS LOCATION

Code		See Page	Code	See Page	Code		See Page
C11	A	34	D23	36 (Access Cab)	J7		35
C12	B	34		37 (Standard Cab)	J8		35
C13	C	34	D24	36 (Access Cab)	J13		35
D16		36 (Access Cab)		37 (Standard Cab)	J21	A	35
		37 (Standard Cab)	D25	36 (Access Cab)	J22	B	35
D17		36 (Access Cab)		37 (Standard Cab)	J23	A	35
		37 (Standard Cab)	D26	36 (Access Cab)	J24	B	35
D18		36 (Access Cab)		37 (Standard Cab)	P10		36 (Access Cab)
D19		36 (Access Cab)	D28	34			37 (Standard Cab)
D20		36 (Access Cab)	D30	34	T13		35
D21		36 (Access Cab)	J3	35	U1		35
D22		36 (Access Cab)	J4	35			
		37 (Standard Cab)	J5	35			

: RELAY BLOCKS

Code	See Page	Relay Blocks (Relay Block Location)
2	21	Engine Room R/B (Engine Compartment Left)

: JUNCTION BLOCK AND WIRE HARNESS CONNECTOR

Code	See Page	Junction Block and Wire Harness (Connector Location)
1E	22 (*2)	Engine Room Main Wire and Driver Side J/B (Lower Finish Panel)
1F	22 (*2)	Cowl Wire and Driver Side J/B (Lower Finish Panel)
1H		
1J		
1L	23 (*2)	

: CONNECTOR JOINING WIRE HARNESS AND WIRE HARNESS

Code	See Page	Joining Wire Harness and Wire Harness (Connector Location)
IB3	44	Front Door LH Wire and Cowl Wire (Left Kick Panel)
IB4		
IF3	46	Front Door RH Wire and Cowl Wire (Right Kick Panel)
IF4		
BE2	48 (Access Cab)	Floor No.2 Wire and Cowl Wire (Center of Left Rocker Panel)
BF2	48 (Access Cab)	Floor No.1 Wire and Cowl Wire (Center of Right Rocker Panel)
BG2	48 (Access Cab)	Floor No.2 Wire and Rear Door No.1 Wire LH (Under the Left Quarter Panel)
BH1	48 (Access Cab)	Floor No.1 Wire and Rear Door No.1 Wire RH (Under the Right Quarter Panel)

: GROUND POINTS

Code	See Page	Ground Points Location
IE	44	Left Kick Panel
IF		
IH	44	Right Kick Panel
II		
BJ	48 (Access Cab)	Inside of Rear Door LH
BK	48 (Access Cab)	Inside of Rear Door RH

: SPLICE POINTS

Code	See Page	Wire Harness with Splice Points	Code	See Page	Wire Harness with Splice Points
B3	48 (Access Cab)	Front Door LH Wire	B7	50 (Standard Cab)	Front Door RH Wire
	50 (Standard Cab)		B8	48 (Access Cab)	Rear Door No.1 Wire LH
B7	48 (Access Cab)	Front Door RH Wire	B9	48 (Access Cab)	Rear Door No.1 Wire RH

* 1 : w/ Daytime Running Light * 2 : w/o Daytime Running Light * 3 : Bench Seat * 4 : Separate Seat, Captain Seat (w/o Power Seat)

TVIP AND WIRELESS DOOR LOCK CONTROL

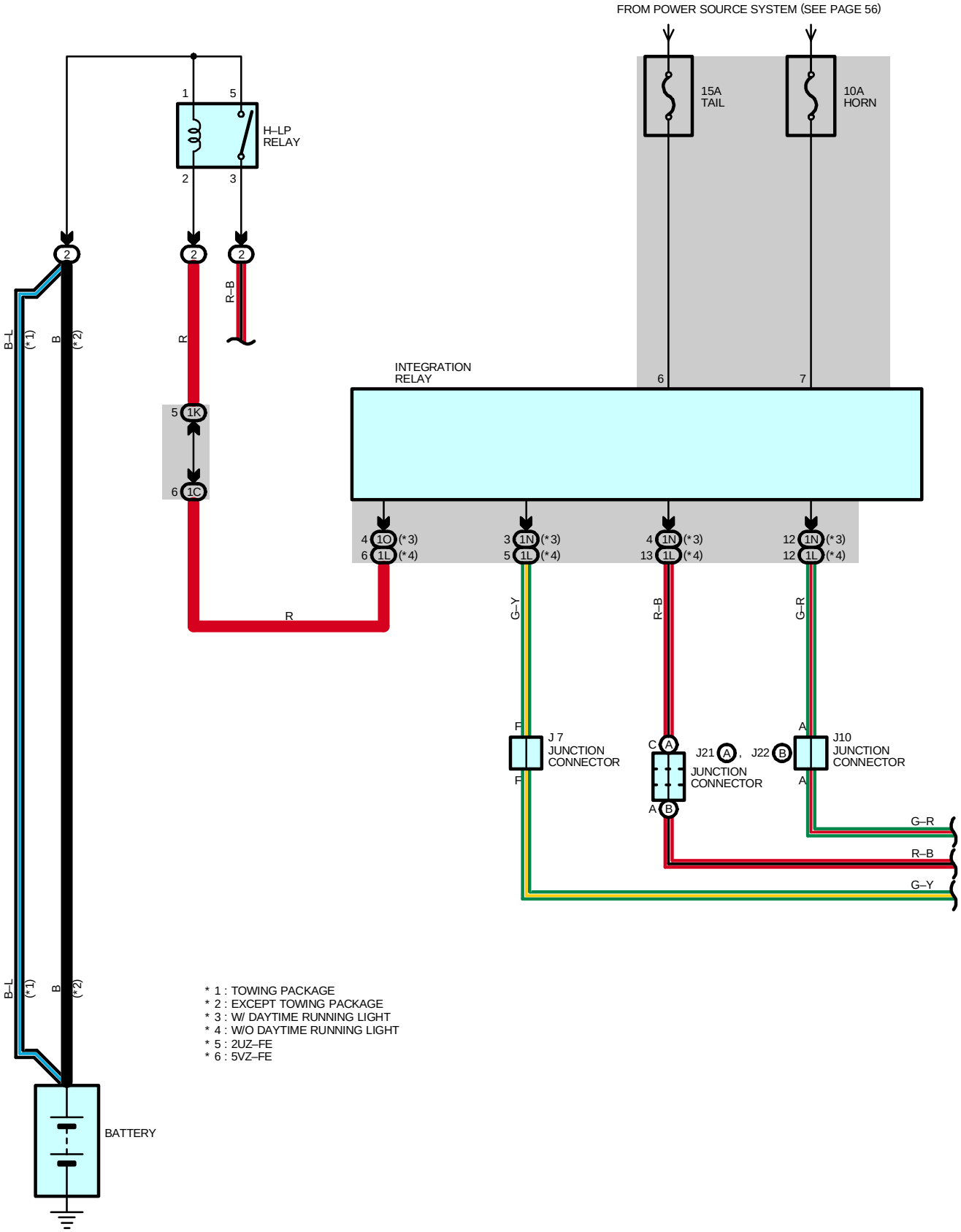

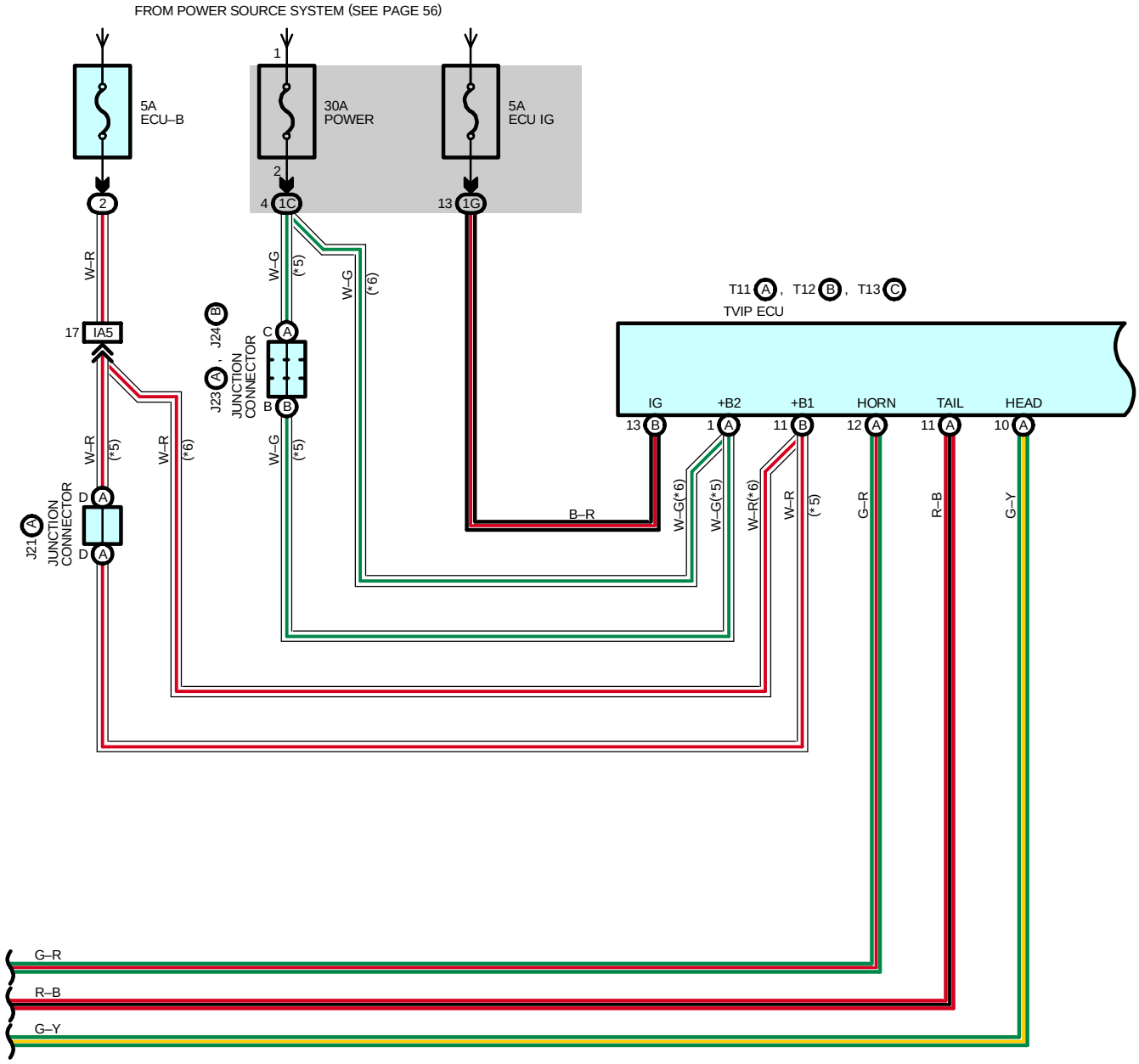
FROM POWER SOURCE SYSTEM (SEE PAGE 56)
5A
ECU–B
30A
POWER
5A
ECU IG
1
2
4 1C
13 1G
2
W–R
17 IA5
W–G
(*5)
W–G
(*6)
T11 A , T12 B , T13 C
TVIP ECU
IG
+B2
+B1
HORN
TAIL
HEAD
13 B
1 A
11 B
12 A
11 A
10 A
B–R
W–G(*6)
W–G(*5)
W–R(*6)
W–R
(*5)
G–R
R–B
G–Y
B A , J24 A
JUNCTION
CONNECTOR
J23
C A
B B
W–R
(*5)
W–R
(*6)
W–G
(*5)
A J21
JUNCTION
CONNECTOR
D A
D A
G–R
R–B
G–Y

TVIP AND WIRELESS DOOR LOCK CONTROL

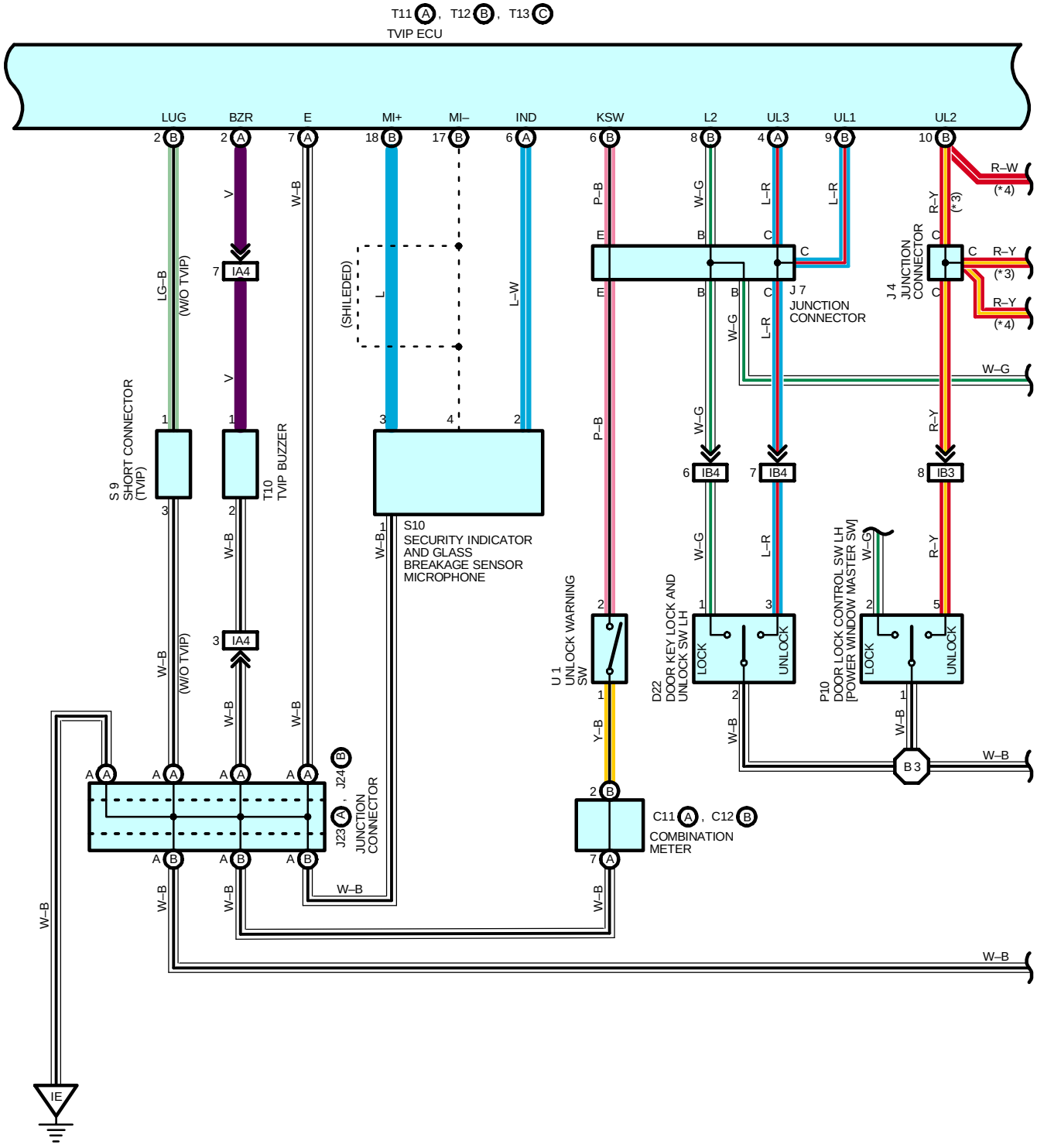

* 3 : W/ DAYTIME RUNNING LIGHT
* 4 : W/O DAYTIME RUNNING LIGHT

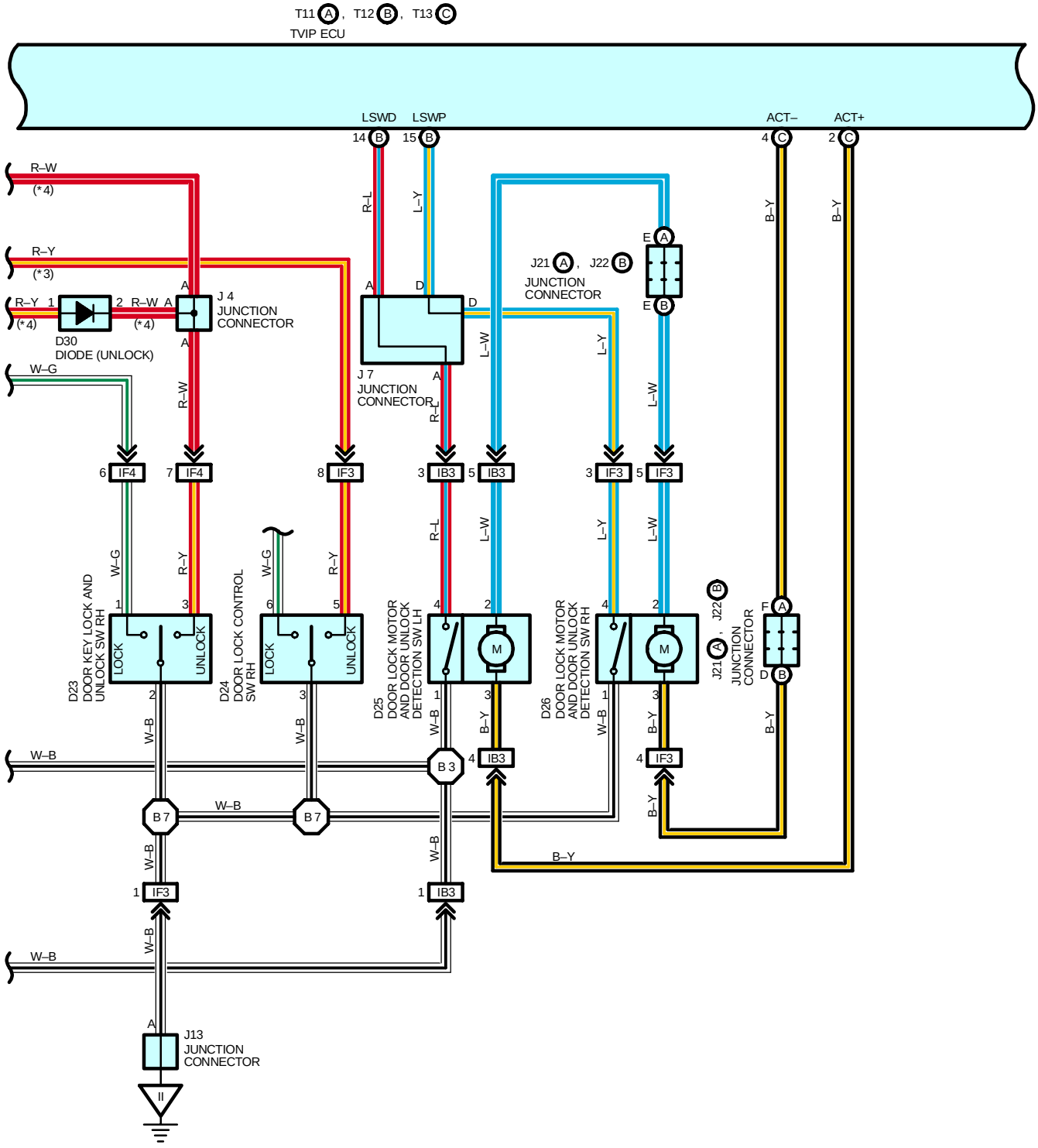

TVIP AND WIRELESS DOOR LOCK CONTROL

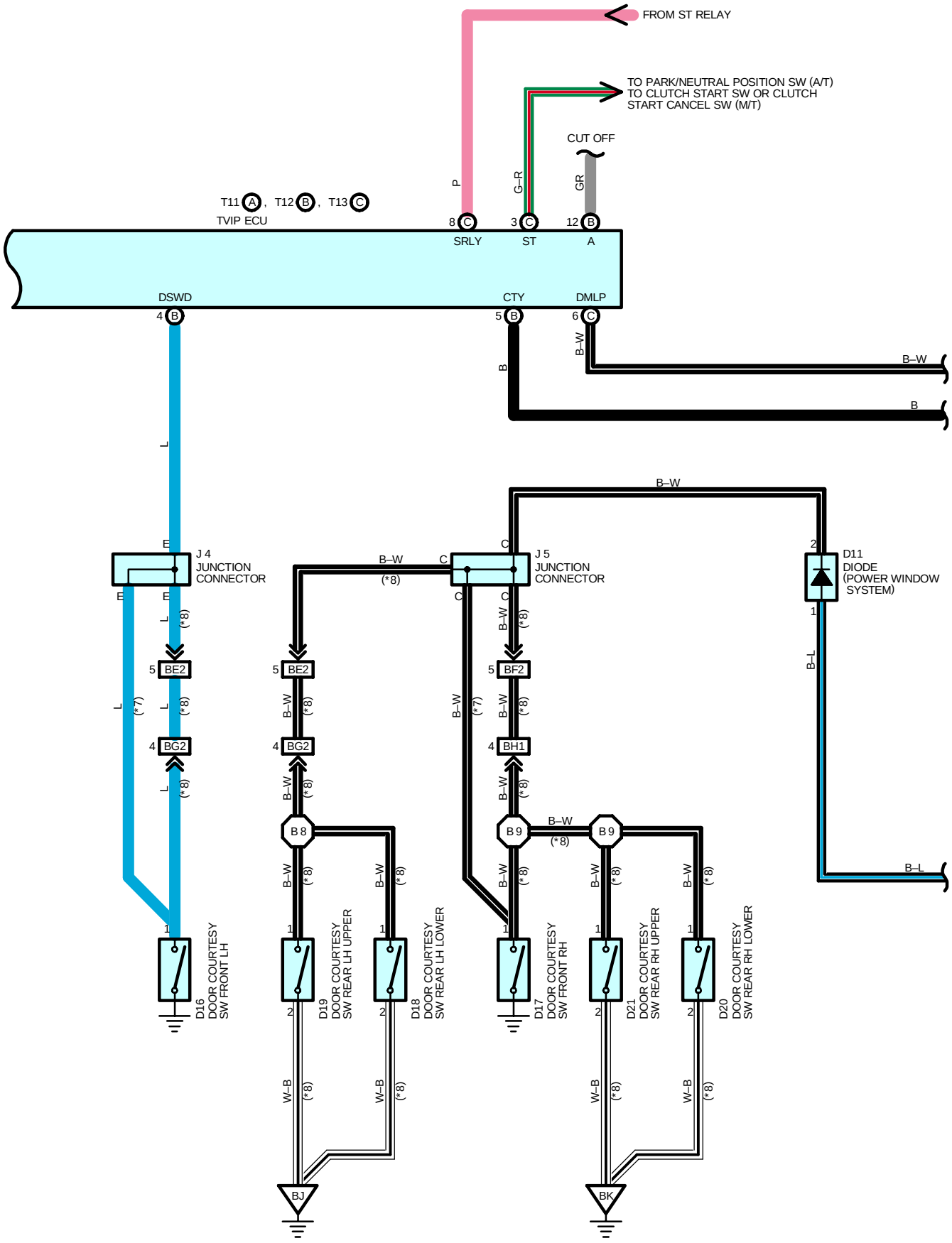

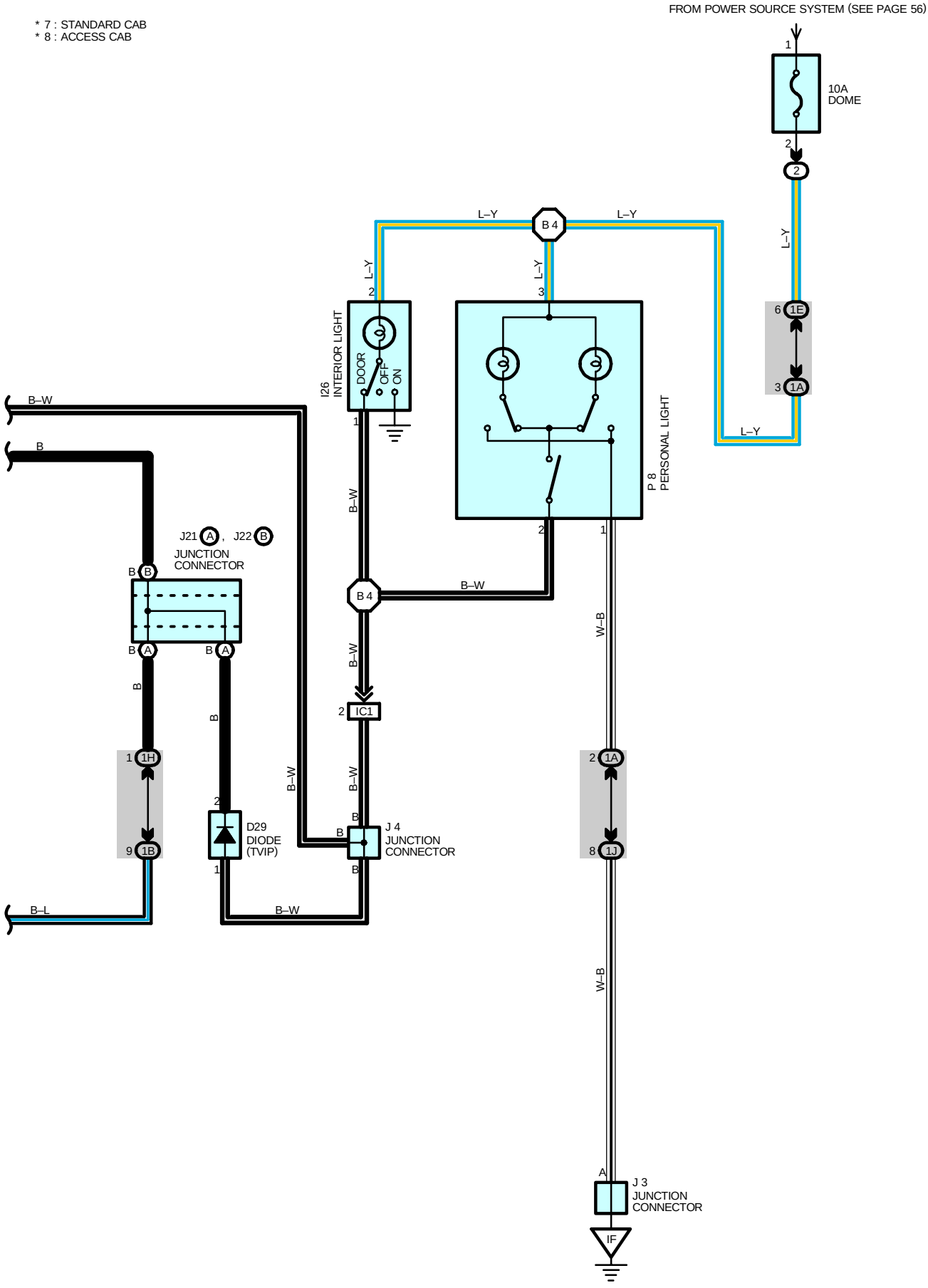
* 7 : STANDARD CAB
* 8 : ACCESS CAB
FROM POWER SOURCE SYSTEM (SEE PAGE 56)
10A
DOME
L–Y
B 4
I26
INTERIOR LIGHT
DOOR
OFF
ON
P 8
PERSONAL LIGHT
6 1E
3 1A
B–W
B
J21 A , J22 B
JUNCTION
CONNECTOR
B–W
B 4
W–B
2 IC1
1 1H
9 1B
D29
DIODE
(TVIP)
J 4
JUNCTION
CONNECTOR
2 1A
8 1J
B–L
B–W
W–B
A
J 3
JUNCTION
CONNECTOR
IF

TVIP AND WIRELESS DOOR LOCK CONTROL

SERVICE HINTS

T11 (A), T12 (B), T13 (C) TVIP ECU

(B) 3–GROUND : Approx. **12** volts with the ignition SW at **ON** position
(A) 1, (B) 11–GROUND : Always approx. **12** volts
(A) 7–GROUND : Always continuity

: PARTS LOCATION

Code	See Page	Code	See Page	Code	See Page
C11 A	34	D24	37 (Standard Cab)	J22 B	35
C12 B	34	D25	36 (Access Cab)	J23 A	35
D11	34		37 (Standard Cab)	J24 B	35
D16	36 (Access Cab)	D26	36 (Access Cab)	P8	36 (Access Cab)
	37 (Standard Cab)		37 (Standard Cab)		37 (Standard Cab)
D17	36 (Access Cab)	D29	34	P10	36 (Access Cab)
	37 (Standard Cab)	D30	34		37 (Standard Cab)
D18	36 (Access Cab)	I26	36 (Access Cab)	S9	35
D19	36 (Access Cab)		37 (Standard Cab)	S10	35
D20	36 (Access Cab)	J3	35	T10	31 (2UZ–FE)
D21	36 (Access Cab)	J4	35		33 (5VZ–FE)
D22	36 (Access Cab)	J5	35	T11 A	35
	37 (Standard Cab)	J7	35	T12 B	35
D23	36 (Access Cab)	J10	35	T13 C	35
	37 (Standard Cab)	J13	35	U1	35
D24	36 (Access Cab)	J21 A	35		

: RELAY BLOCKS

Code	See Page	Relay Blocks (Relay Block Location)
2	21	Engine Room R/B (Engine Compartment Left)

: JUNCTION BLOCK AND WIRE HARNESS CONNECTOR

Code	See Page	Junction Block and Wire Harness (Connector Location)
1A	22 (*2)	Roof Wire and Driver Side J/B (Lower Finish Panel)
	26 (*1)	
1B	22 (*2)	Cowl Wire and Driver Side J/B (Lower Finish Panel)
	26 (*1)	
1C	22 (*2)	
	26 (*1)	
1E	22 (*2)	Engine Room Main Wire and Driver Side J/B (Lower Finish Panel)
	26 (*1)	
1G	22 (*2)	Cowl Wire and Driver Side J/B (Lower Finish Panel)
	26 (*1)	
1H	22 (*2)	
	26 (*1)	
1J	22 (*2)	
	26 (*1)	
1K	22 (*2)	Engine Room Main Wire and Driver Side J/B (Lower Finish Panel)
	26 (*1)	
1L	23 (*2)	Cowl Wire and Driver Side J/B (Lower Finish Panel)
1N	27 (*1)	
1O		

* 1 : w/ Daytime Running Light * 2 : w/o Daytime Running Light * 3 : Bench Seat * 4 : Separate Seat, Captain Seat (w/o Power Seat)

: CONNECTOR JOINING WIRE HARNESS AND WIRE HARNESS

Code	See Page	Joining Wire Harness and Wire Harness (Connector Location)
IA4	44	Engine Room Main Wire and Cowl Wire (Left Kick Panel)
IA5		
IB3	44	Front Door LH Wire and Cowl Wire (Left Kick Panel)
IB4		
IC1	44	Cowl Wire and Roof Wire (Left Side of Instrument Panel)
IF3	46	Front Door RH Wire and Cowl Wire (Right Kick Panel)
IF4		
BE2	48 (Access Cab)	Floor No.2 Wire and Cowl Wire (Center of Left Rocker Panel)
BF2	48 (Access Cab)	Floor No.1 Wire and Cowl Wire (Center of Right Rocker Panel)
BG2	48 (Access Cab)	Floor No.2 Wire and Rear Door No.1 Wire LH (Under the Left Quarter Panel)
BH1	48 (Access Cab)	Floor No.1 Wire and Rear Door No.1 Wire RH (Under the Right Quarter Panel)

: GROUND POINTS

Code	See Page	Ground Points Location
IE	44	Left Kick Panel
IF		
II	44	Right Kick Panel
BJ	48 (Access Cab)	Inside of Rear Door LH
BK	48 (Access Cab)	Inside of Rear Door RH

: SPLICE POINTS

Code	See Page	Wire Harness with Splice Points	Code	See Page	Wire Harness with Splice Points
B3	48 (Access Cab)	Front Door LH Wire	B7	48 (Access Cab)	Front Door RH Wire
	50 (Standard Cab)			50 (Standard Cab)	
B4	48 (Access Cab)	Roof Wire	B8	48 (Access Cab)	Rear Door No.1 Wire LH
	50 (Standard Cab)		B9	48 (Access Cab)	Rear Door No.1 Wire RH

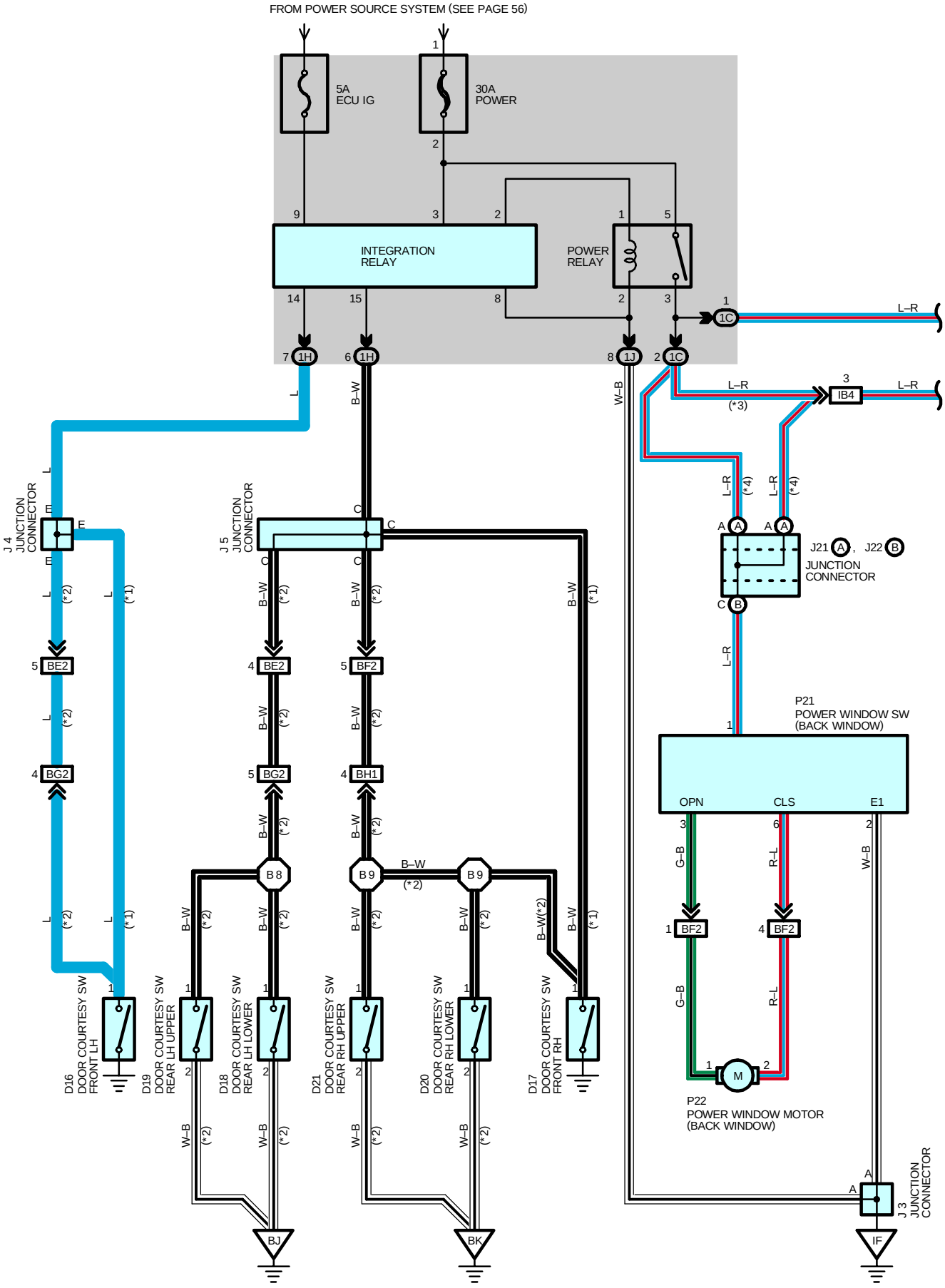
FROM POWER SOURCE SYSTEM (SEE PAGE 56)
5A
ECU IG
30A
POWER
INTEGRATION
RELAY
POWER
RELAY
1C
1H
1J
IB4
L–R
B–W
W–B
(*3)
(*4)
J 4
JUNCTION
CONNECTOR
J 5
JUNCTION
CONNECTOR
J21 A , J22 B
JUNCTION
CONNECTOR
BE2
BF2
BG2
BH1
B 8
B 9
P21
POWER WINDOW SW
(BACK WINDOW)
OPN
CLS
E1
G–B
R–L
P22
POWER WINDOW MOTOR
(BACK WINDOW)
D16
DOOR COURTESY SW
FRONT LH
D19
DOOR COURTESY SW
REAR LH UPPER
D18
DOOR COURTESY SW
REAR LH LOWER
D21
DOOR COURTESY SW
REAR RH UPPER
D20
DOOR COURTESY SW
REAR RH LOWER
D17
DOOR COURTESY SW
FRONT RH
J 3
JUNCTION
CONNECTOR
BJ
BK
IF

* 1 : STANDARD CAB
* 2 : ACCESS CAB
* 3 : 5VZ–FE W/O DAYTIME RUNNING LIGHT M/T
* 4 : EXCEPT *3

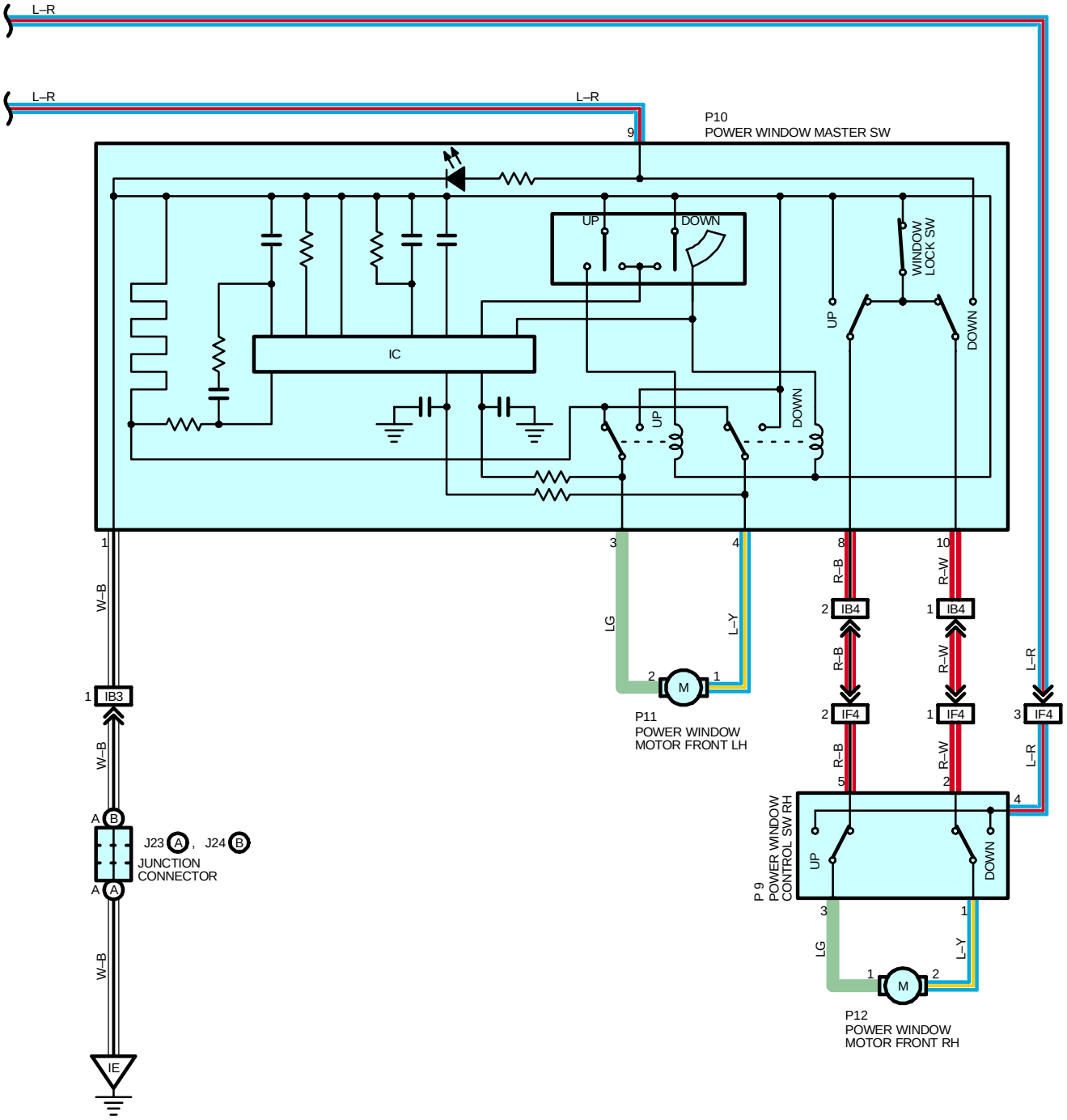

SYSTEM OUTLINE

With the ignition SW turned on, current flows through the ECU IG fuse to TERMINAL 9 of the integration relay to TERMINAL 2 to TERMINAL 1 of the power relay to TERMINAL 2 to GROUND, activating the power relay, and the current flowing from TERMINAL 5 of the power relay flows to TERMINAL 3 to TERMINAL 9 of the power window master SW and TERMINAL 4 of the power window control SW RH.

1. MANUAL OPERATION (DRIVER'S WINDOW)

With the ignition SW turned on and with the power window master SW (Manual SW) in UP position, the current flowing to TERMINAL 9 of the power window master SW flows to TERMINAL 3 to TERMINAL 2 of the power window motor LH to TERMINAL 1 to TERMINAL 4 of the master SW to TERMINAL 1 to GROUND and causes the power window motor to rotate in the up direction. The window ascends only while the SW is being pushed.

In down operation, the current flowing from TERMINAL 9 of the power window master SW to TERMINAL 4 flows to TERMINAL 1 of the motor LH to TERMINAL 2 to TERMINAL 3 of the master SW to TERMINAL 1 to GROUND, flowing in the opposite direction to manual up operation, causing the motor to rotate in reverse and lowering the window.

2. AUTO DOWN OPERATION (DRIVER'S WINDOW)

With the ignition SW on and with the auto SW of the power window master SW in DOWN position, the current flowing to TERMINAL 9 of the master SW flows to TERMINAL 4 of the master SW to TERMINAL 1 of the power window motor LH to TERMINAL 2 to TERMINAL 3 of the master SW to TERMINAL 1 to GROUND, causing the motor to rotate towards the down side.

Then the solenoid in the master SW is activated and it locks the auto SW being pushed, causing the motor to continue to rotate in auto down operation.

When the window has completely descended, the current flowing between TERMINAL 3 of the master SW and TERMINAL 1 increases. As a result, the solenoid stops operating, the auto SW turns off and the flowing from TERMINAL 9 of the master SW to TERMINAL 4 is cut off, stopping the motor so that auto stop occurs.

3. STOPPING OF AUTO DOWN AT DRIVER'S WINDOW

When the manual SW (Driver's) is pushed to the up side during auto down operation, a ground circuit opens in the master SW and current does not flow from TERMINAL 3 of the master SW to TERMINAL 1, so the motor stops, causing auto down operation to stop. If the manual SW is pushed continuously, the motor rotates in the up direction in manual up operation.

4. MANUAL OPERATION BY POWER WINDOW CONTROL SW (PASSENGER'S WINDOW)

With the power window control SW RH is pushed to the up side, the current flowing from TERMINAL 4 of the power window control SW RH flows to TERMINAL 3 of the power window control SW RH to TERMINAL 1 of the power window motor RH to TERMINAL 2 to TERMINAL 1 of the power window control SW RH to TERMINAL 2 to TERMINAL 10 of the master SW to TERMINAL 1 to GROUND. This causes the power window motor RH to rotate in the up direction. Up operation is continuous only while the power window control SW RH is pushed to the up side. When the window descends, the current flowing to the motor flows in the opposite direction, from TERMINAL 1 to TERMINAL 2, and the motor rotates in revers.

When the window lock SW is pushed to the lock side, the ground circuit to the passenger's window becomes open. As a result, even if Open/Close operation of the passenger's window is tried, the current from TERMINAL 9 of the power window master SW is not grounded and the motor does not rotate, so the passenger's window can not be operated and window lock occurs.

5. KEY OFF POWER WINDOW OPERATION

With the ignition SW turned from on to off, the integration relay operates for about 43 seconds and current flows from TERMINAL 1 of the power relay to TERMINAL 2 to GROUND. For this period, current also flows TERMINAL 5 to TERMINAL 3. This current flows to TERMINAL 9 of the power window master SW and to TERMINAL 4 of the power window control SW RH. As a result, for about 43 seconds after the ignition SW is turned off, it is possible to raise and lower the power window by the functioning of the integration relay. Also, by opening the door (Door courtesy SW on) within about 43 seconds after turning the ignition SW to off, a signal is input to TERMINAL 3, 14 or 15 of the integration relay. As a result, the integration relay turns off, and up and down movement of the window stops.

SERVICE HINTS

D16, D17 DOOR COURTESY SW LH, RH

1–GROUND : Continuity with door open

INTEGRATION RELAY

9–GROUND : Approx. **12** volts with ignition SW at **ON** position
3–GROUND : Always approx. **12** volts
14–GROUND : Continuity with front LH door open
15–GROUND : Continuity with front RH door open (Standard cab)
15–GROUND : Continuity with front RH, rear LH, RH door open (Access cab)

P9 POWER WINDOW CONTROL SW RH

4–GROUND : Approx. **12** volts with ignition SW on and stays at **12** volts for **41.5** –**44.5** seconds after the ignition SW is turned off, but if a door is open in the **45** seconds period, voltage will drop to **0** volts

P10 POWER WINDOW MASTER SW

1–GROUND : Always continuity
9–GROUND : Approx. **12** volts with ignition SW on and stays at **12** volts for **41.5** –**44.5** seconds after the ignition SW is turned off, but if a door is opened in this **41.5** –**44.5** seconds period, voltage will drop to **0** volts
3–GROUND : Approx. **12** volts with ignition SW at **ON** position and master SW at **UP** position
4–GROUND : Approx. **12** volts with ignition SW at **ON** position and master SW at **DOWN** or **AUTO DOWN** position

WINDOW LOCK SW

Open with window lock SW at **LOCK** position

○ : PARTS LOCATION

Code	See Page	Code		See Page	Code	See Page
D16	36 (Access Cab)	J4		35	P10	37 (Standard Cab)
	37 (Standard Cab)	J5		35	P11	36 (Access Cab)
D17	36 (Access Cab)	J21	A	35		37 (Standard Cab)
	37 (Standard Cab)	J22	B	35	P12	36 (Access Cab)
D18	36 (Access Cab)	J23	A	35		37 (Standard Cab)
D19	36 (Access Cab)	J24	B	35	P21	35
D20	36 (Access Cab)	P9		36 (Access Cab)	P22	36 (Access Cab)
D21	36 (Access Cab)			37 (Standard Cab)		
J3	35	P10		36 (Access Cab)		

: JUNCTION BLOCK AND WIRE HARNESS CONNECTOR

Code	See Page	Junction Block and Wire Harness (Connector Location)
1C	22 (*2)	Cowl Wire and Driver Side J/B (Lower Finish Panel)
	26 (*1)	
1H	22 (*2)	
	26 (*1)	
1J	22 (*2)	
	26 (*1)	

: CONNECTOR JOINING WIRE HARNESS AND WIRE HARNESS

Code	See Page	Joining Wire Harness and Wire Harness (Connector Location)
IB3	44	Front Door LH Wire and Cowl Wire (Left Kick Panel)
IB4		
IF4	46	Front Door RH Wire and Cowl Wire (Right Kick Panel)
BE2	48 (Access Cab)	Floor No.2 Wire and Cowl Wire (Center of Left Rocker Panel)
BF2	48 (Access Cab)	Floor No.1 Wire and Cowl Wire (Center of Right Rocker Panel)
BG2	48 (Access Cab)	Floor No.2 Wire and Rear Door No.1 Wire LH (Under the Left Quarter Panel)
BH1	48 (Access Cab)	Floor No.1 Wire and Rear Door No.1 Wire RH (Under the Right Quarter Panel)

* 1 : w/ Daytime Running Light * 2 : w/o Daytime Running Light * 3 : Bench Seat * 4 : Separate Seat, Captain Seat (w/o Power Seat)

POWER WINDOW

: GROUND POINTS

Code	See Page	Ground Points Location
IE	44	Left Kick Panel
IF		
BJ	48 (Access Cab)	Inside of Rear Door LH
BK	48 (Access Cab)	Inside of Rear Door RH

: SPLICE POINTS

Code	See Page	Wire Harness with Splice Points	Code	See Page	Wire Harness with Splice Points
B8	48 (Access Cab)	Rear Door No.1 Wire LH	B9	48 (Access Cab)	Rear Door No.1 Wire RH

KEY REMINDER AND SEAT BELT WARNING

* 1 : STANDARD CAB
* 2 : ACCESS CAB
* 3 : W/ POWER SEAT
* 4 : BENCH SEAT
* 5 : SEPARATE SEAT, CAPTAIN SEAT (W/O POWER SEAT)
* 6 : W/ DOOR LOCK CONTROL
* 7 : W/O DOOR LOCK CONTROL

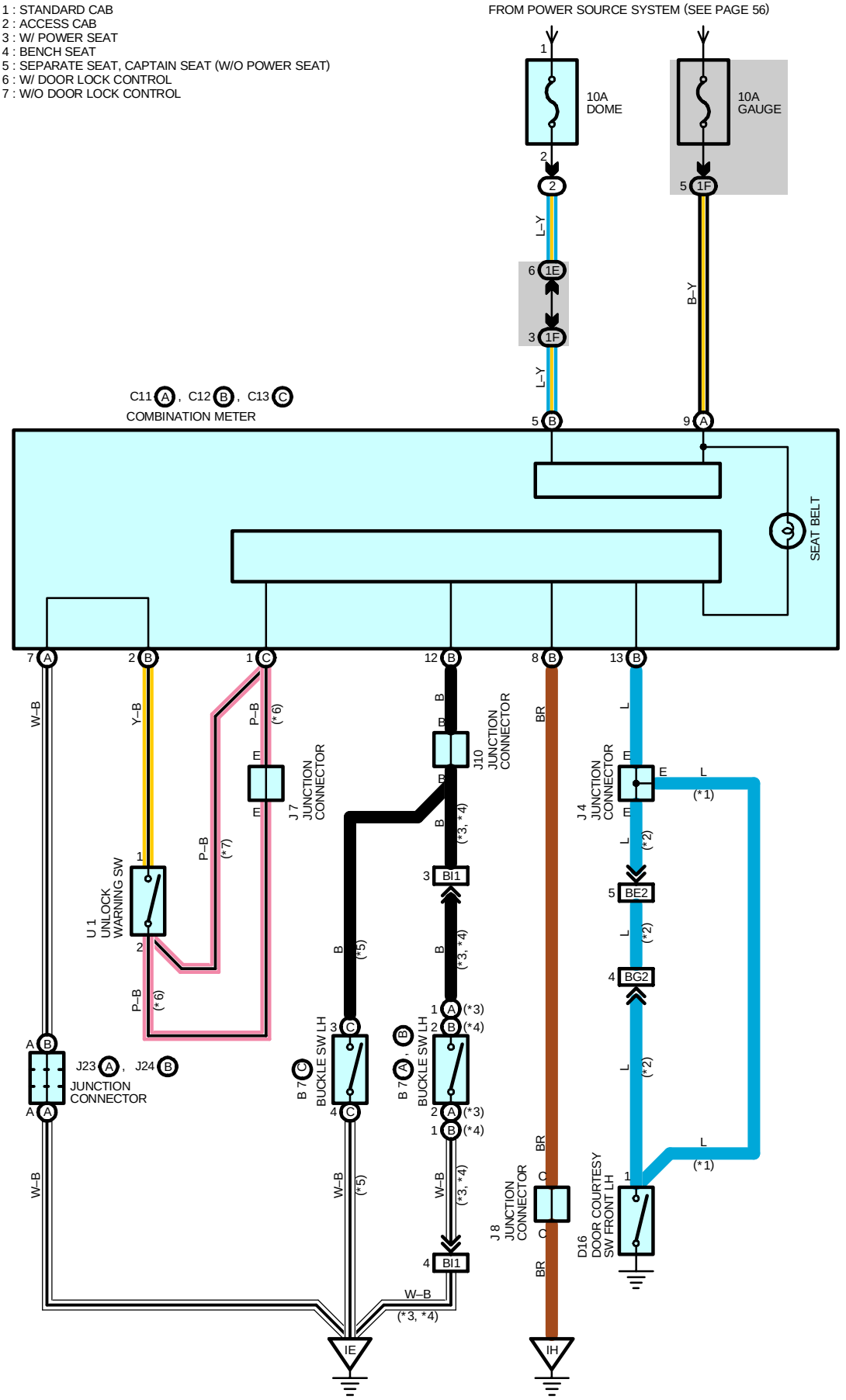

SYSTEM OUTLINE

Current always flows to TERMINAL (B) 5 of the combination meter through the DOME fuse.

1. SEAT BELT WARNING SYSTEM

When the ignition SW is turned on, current flows from the GAUGE fuse to TERMINAL (A) 9 of the combination meter. This current activates the combination meter and the current flowing through the seat belt warning light flows from TERMINAL (B) 8 to GROUND, causing the warning light to light up. A buckle SW off signal is input to TERMINAL (B) 12 of the combination meter to TERMINAL (B) 8 to GROUND, causing the warning light to light up. A buckle SW off signal is input to TERMINAL (B) 12 of the combination meter, the current flowing to TERMINAL (B) 5 of the combination meter flows from TERMINAL (B) 8 to GROUND and the seat belt warning buzzer sounds. However, if the seat belt is put on during this period (While the buzzer is sounding), signal input to TERMINAL (B) 12 of the combination meter stops and the current flow from TERMINAL (B) 5 of the combination meter to TERMINAL (B) 8 to GROUND is cut, causing the buzzer to stop.

2. KEY REMINDER SYSTEM

With the ignition key inserted in the key cylinder (Unlock warning SW on), the ignition SW still off and driver's door open (Door courtesy SW on), when a signal is input to TERMINAL (B) 13 of the combination meter, the combination meter operates, current flows from TERMINAL (B) 5 of the combination meter to TERMINAL (B) 8 to GROUND and key reminder buzzer sounds.

SERVICE HINTS

B7 (A), (B) BUCKLE SW LH

(A) 1–(A) 2, (B) 2–(B) 1 : Closed with driver's seat belt in use

D16 DOOR COURTESY SW FRONT LH

1–GROUND : Closed with front LH door open

U1 UNLOCK WARNING SW

1–2 : Closed with ignition key in cylinder

C11 (A), C12 (B), C13 (C) COMBINATION METER

(A) 7, (B) 8–GROUND : Always continuity
(B)13–GROUND : Continuity with the front LH door open
(C) 1–GROUND : Continuity with the ignition key in cylinder
(B)12–GROUND : Continuity with the driver's seat belt in use
(B) 5–GROUND : Always approx. **12** volts
(A) 9–GROUND : Approx. **12** volts withe ignition SW at **ON** or **ST** position

: PARTS LOCATION

Code		See Page	Code		See Page	Code		See Page
B7	A	38 (w/ Power Seat)	C12	B	34	J8		35
	B	36 (Access Cab *3)	C13	C	34	J10		35
		37 (Standard Cab *3)	D16		36 (Access Cab)	J23	A	35
	C	36 (Access Cab *4)			37 (Standard Cab)	J24	B	35
		37 (Standard Cab *4)	J4		35	U1		35
C11	A	34	J7		35			

: RELAY BLOCKS

Code	See Page	Relay Blocks (Relay Block Location)
2	21	Engine Room R/B (Engine Compartment Left)

: JUNCTION BLOCK AND WIRE HARNESS CONNECTOR

Code	See Page	Junction Block and Wire Harness (Connector Location)
1E	22 (*2)	Engine Room Main Wire and Driver Side J/B (Lower Finish Panel)
	26 (*1)	
1F	22 (*2)	Cowl Wire and Driver Side J/B (Lower Finish Panel)
	26 (*1)	

* 1 : w/ Daytime Running Light * 2 : w/o Daytime Running Light * 3 : Bench Seat * 4 : Separate Seat, Captain Seat (w/o Power Seat)

KEY REMINDER AND SEAT BELT WARNING

: CONNECTOR JOINING WIRE HARNESS AND WIRE HARNESS

Code	See Page	Joining Wire Harness and Wire Harness (Connector Location)
BE2	48 (Access Cab)	Floor No.2 Wire and Cowl Wire (Center of Left Rocker Panel)
BG2	48 (Access Cab)	Floor No.2 Wire and Rear Door No.1 Wire LH (Under the Left Quarter Panel)
BI1	48 (Access Cab)	Cowl Wire and Seat No.1 Wire (Under the Driver's Seat)
	50 (Standard Cab)	
	52	

: GROUND POINTS

Code	See Page	Ground Points Location
IE	44	Left Kick Panel
IH	44	Right Kick Panel

CIGARETTE LIGHTER AND POWER OUTLET

* 1 : W/ CIGARETTE LIGHTER ILLUMINATION
* 2 : W/O CIGARETTE LIGHTER ILLUMINATION
* 3 : TOWING PACKAGE
* 4 : EXCEPT TOWING PACKAGE

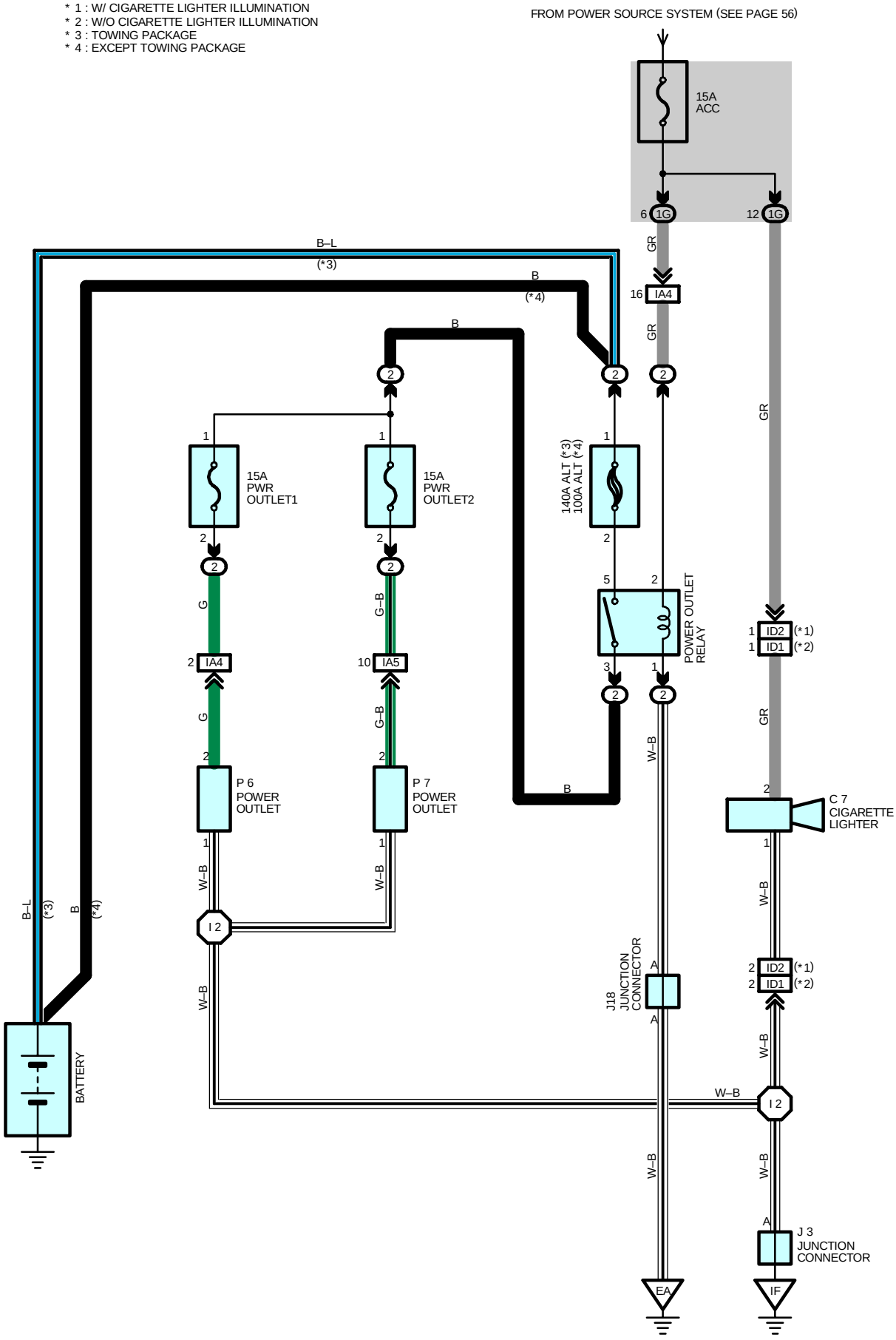

SERVICE HINTS

C7 CIGARETTE LIGHTER

2–GROUND : Approx. **12** volts with ignition SW at **ON** or **ACC** position
1–GROUND : Always continuity

P6, P7 POWER OUTLET

2–GROUND : Approx. **12** volts with the ignition SW at **ON** or **ACC** position
1–GROUND : Always continuity

: PARTS LOCATION

Code	See Page	Code	See Page	Code	See Page
C7	34	J18	31 (2UZ–FE)	P6	35
J3	35		33 (5VZ–FE)	P7	35

: RELAY BLOCKS

Code	See Page	Relay Blocks (Relay Block Location)
2	21	Engine Room R/B (Engine Compartment Left)

: JUNCTION BLOCK AND WIRE HARNESS CONNECTOR

Code	See Page	Junction Block and Wire Harness (Connector Location)
1G	22 (*2)	Cowl Wire and Driver Side J/B (Lower Finish Panel)
	26 (*1)	

: CONNECTOR JOINING WIRE HARNESS AND WIRE HARNESS

Code	See Page	Joining Wire Harness and Wire Harness (Connector Location)
IA4	44	Engine Room Main Wire and Cowl Wire (Left Kick Panel)
IA5		
ID1	46	Cigarette Lighter Wire and Cowl Wire (Instrument Panel Brace LH)
ID2		

: GROUND POINTS

Code	See Page	Ground Points Location
EA	40 (2UZ–FE)	Front Left Fender
	42 (5VZ–FE)	
IF	44	Left Kick Panel

: SPLICE POINTS

Code	See Page	Wire Harness with Splice Points	Code	See Page	Wire Harness with Splice Points
I2	46	Cowl Wire			

* 1 : w/ Daytime Running Light * 2 : w/o Daytime Running Light * 3 : Bench Seat * 4 : Separate Seat, Captain Seat (w/o Power Seat)

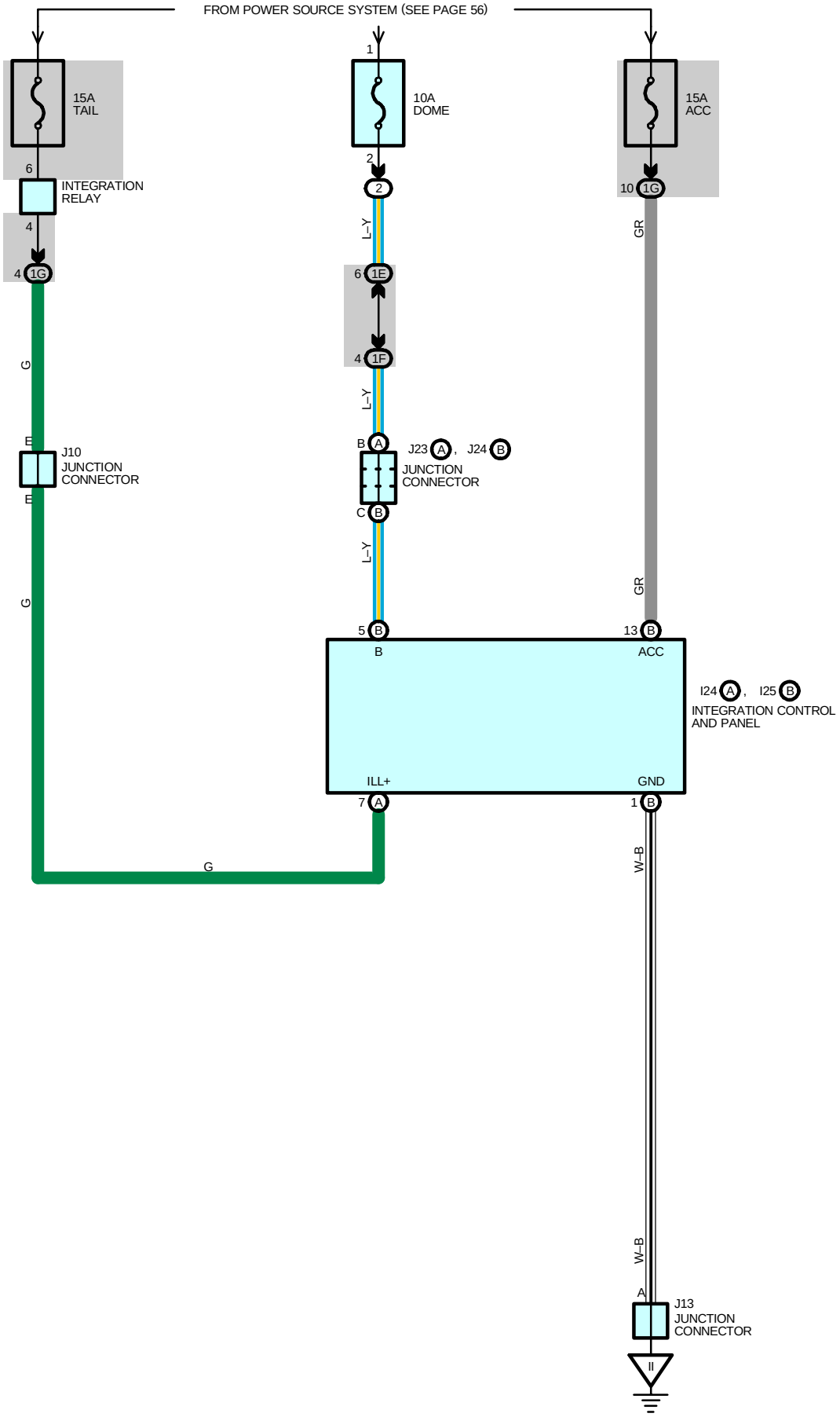
FROM POWER SOURCE SYSTEM (SEE PAGE 56)
15A
TAIL
10A
DOME
15A
ACC
INTEGRATION
RELAY
6
4
4 1G
2
1
2
10 1G
L–Y
GR
6 1E
4 1F
G
L–Y
E
J10
JUNCTION
CONNECTOR
E
B A
J23 A , J24 B
JUNCTION
CONNECTOR
C B
L–Y
G
GR
5 B
B
13 B
ACC
I24 A , I25 B
INTEGRATION CONTROL
AND PANEL
ILL+
7 A
GND
1 B
G
W–B
W–B
A
J13
JUNCTION
CONNECTOR

SERVICE HINTS

I24 (A), I25 (B) INTEGRATION CONTROL AND PANEL

(B) 5–GROUND : Always approx. **12** volts (Power for clock)
(B)13–GROUND : Approx. **12** volts with ignition SW at **ON** or **ACC** position (Power for indication)
(A) 7–GROUND : Approx. **12** volts with light control SW at **TAIL** or **HEAD** position (Signal of indication)
(B) 1–GROUND : Always continuity

: PARTS LOCATION

Code		See Page	Code	See Page	Code		See Page
I24	A	35	J10	35	J23	A	35
I25	B	35	J13	35	J24	B	35

: RELAY BLOCKS

Code	See Page	Relay Blocks (Relay Block Location)
2	21	Engine Room R/B (Engine Compartment Left)

: JUNCTION BLOCK AND WIRE HARNESS CONNECTOR

Code	See Page	Junction Block and Wire Harness (Connector Location)
1E	22 (*2)	Engine Room Main Wire and Driver Side J/B (Lower Finish Panel)
	26 (*1)	
1F	22 (*2)	Cowl Wire and Driver Side J/B (Lower Finish Panel)
	26 (*1)	
1G	22 (*2)	
	26 (*1)	

: GROUND POINTS

Code	See Page	Ground Points Location
II	44	Right Kick Panel

* 1 : w/ Daytime Running Light * 2 : w/o Daytime Running Light * 3 : Bench Seat * 4 : Separate Seat, Captain Seat (w/o Power Seat)

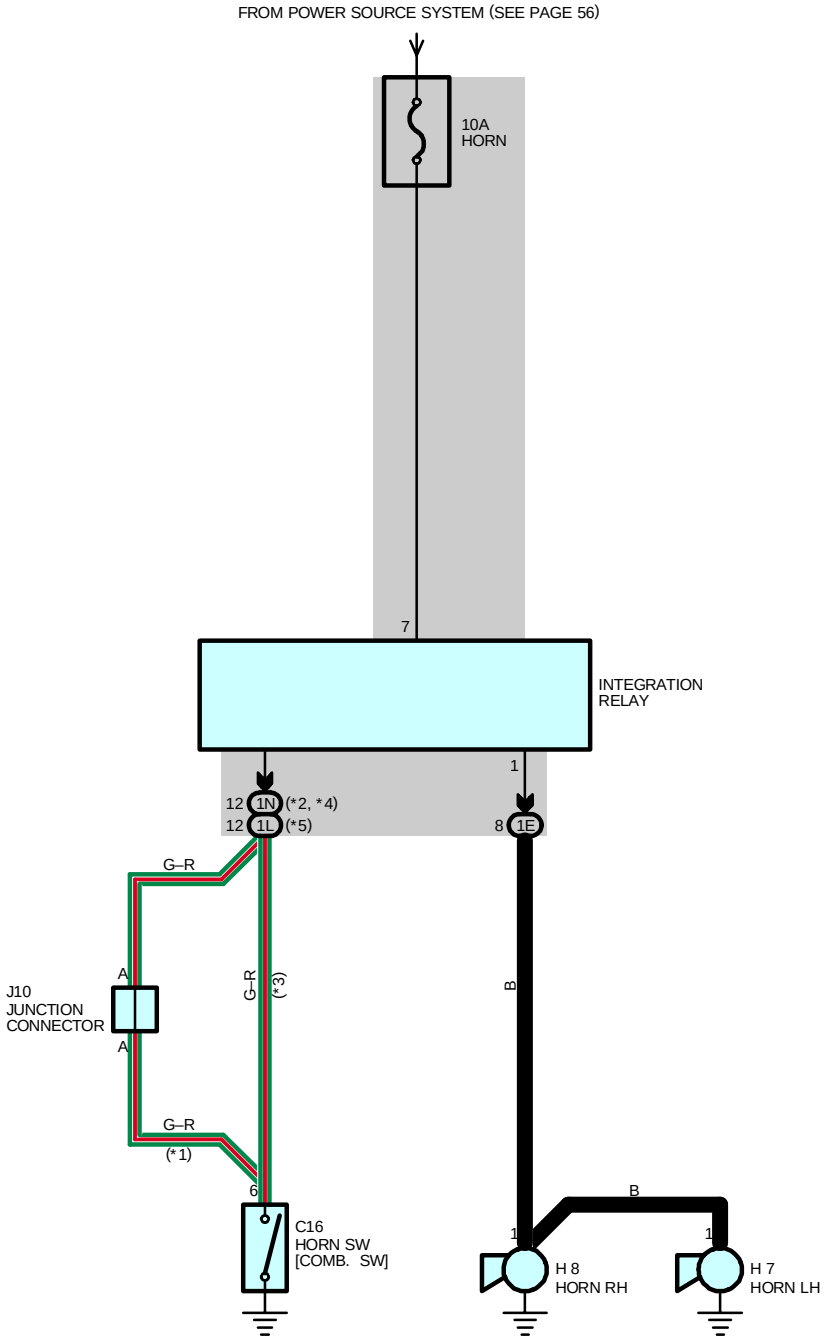

* 1 : 5VZ–FE W/ DOOR LOCK CONTROL, 2UZ–FE
* 2 : 5VZ–FE W/O DOOR LOCK CONTROL W/ DAYTIME RUNNING LIGHT
* 3 : 5VZ–FE W/O DOOR LOCK CONTROL W/O DAYTIME RUNNING LIGHT
* 4 : 5VZ–FE W/ DOOR LOCK CONTROL W/ DAYTIME RUNNING LIGHT, 2UZ–FE W/ DAYTIME RUNNING LIGHT
* 5 : 5VZ–FE W/ DOOR LOCK CONTROL W/O DAYTIME RUNNING LIGHT, 2UZ–FE W/O DAYTIME RUNNING LIGHT

SERVICE HINTS

C16 HORN SW [COMB. SW]

6–GROUND : Continuity with horn SW on

○ : PARTS LOCATION

Code	See Page	Code	See Page	Code	See Page
C16	34	H7	32 (5VZ–FE)	H8	32 (5VZ–FE)
H7	30 (2UZ–FE)	H8	30 (2UZ–FE)	J10	35

: JUNCTION BLOCK AND WIRE HARNESS CONNECTOR

Code	See Page	Junction Block and Wire Harness (Connector Location)
1E	22 (*2)	Engine Room Main Wire and Driver Side J/B (Lower Finish Panel)
	26 (*1)	
1L	23 (*2)	Cowl Wire and Driver Side J/B (Lower Finish Panel)
1N	27 (*1)	

* 1 : w/ Daytime Running Light * 2 : w/o Daytime Running Light * 3 : Bench Seat * 4 : Separate Seat, Captain Seat (w/o Power Seat)

WIPER AND WASHER (w/ INT TIME SW MECHANISM)

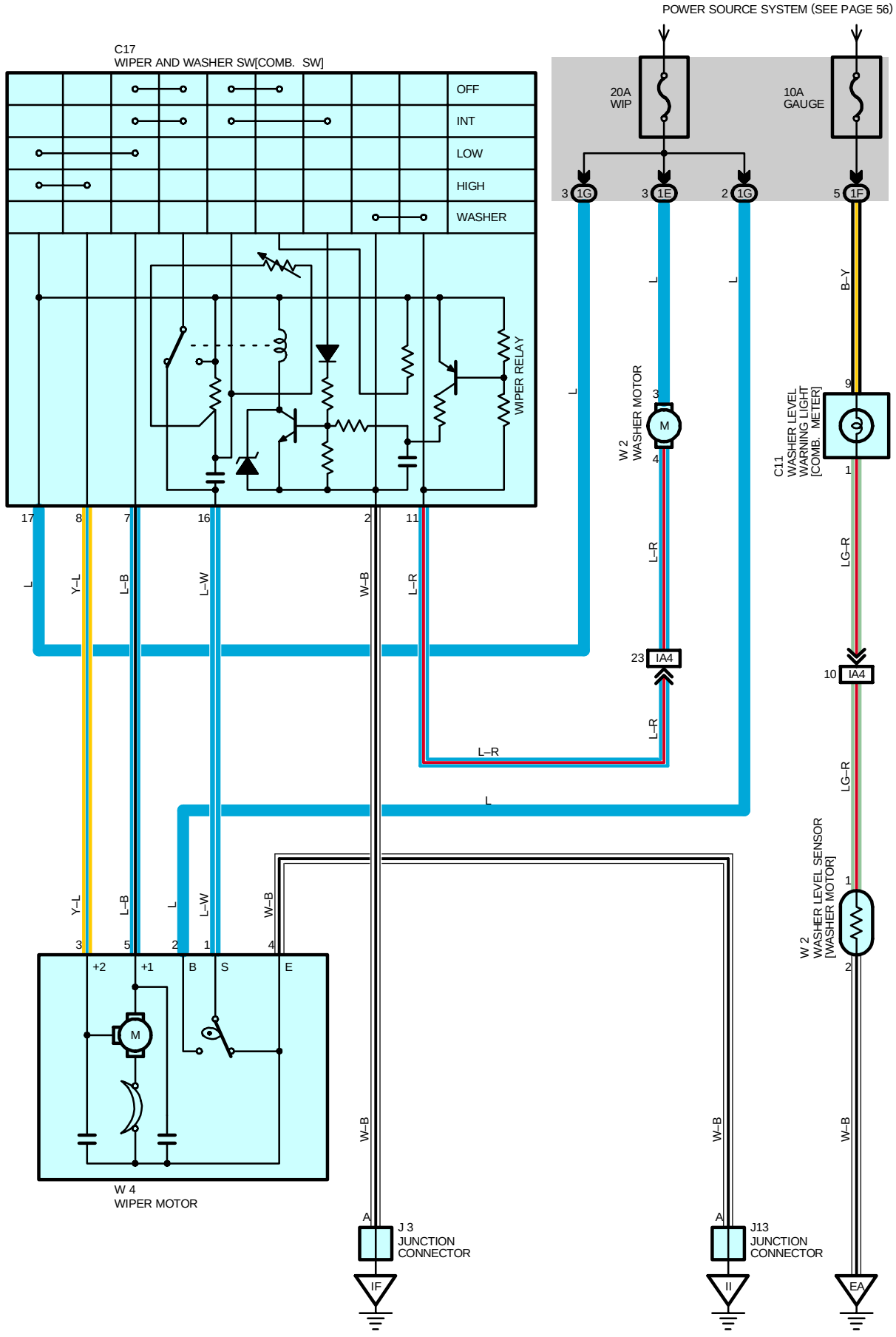

SYSTEM OUTLINE

With the ignition SW turned on, current flows to TERMINAL 17 of the wiper and washer SW, TERMINAL 3 of the washer motor and TERMINAL 2 of the wiper motor through the WIP fuse.

1. LOW SPEED POSITION

With wiper SW turned to LOW position, current flows from TERMINAL 17 of the wiper and washer SW to TERMINAL 7 to TERMINAL 5 of the wiper motor to TERMINAL 4 to GROUND and causes the wiper motor to run at low speed.

2. HIGH SPEED POSITION

With wiper SW turned to HIGH position, current flows from TERMINAL 17 of the wiper and washer SW to TERMINAL 8 to TERMINAL 3 of the wiper motor to TERMINAL 4 to GROUND and causes the motor to run at high speed.

3. INT POSITION

With wiper SW turned to INT position, the relay operates and the current which is connected by relay function flows from TERMINAL 17 of the wiper and washer SW to TERMINAL 2 to GROUND. This flowing the intermittent circuit and current flows from TERMINAL 17 of the wiper and washer SW to TERMINAL 7 to TERMINAL 5 of the wiper motor to TERMINAL 4 to GROUND and the wiper functions.

The intermittent operation is controlled by charging and discharging of the condenser installed in the relay and the intermittent time is controlled by a time control SW to change the charging time of the condenser.

4. WASHER INTERLOCKING OPERATION

With the washer SW turned to on, current flows from TERMINAL 3 of the washer motor to TERMINAL 4 to TERMINAL 11 of the wiper and washer SW to TERMINAL 2 to GROUND and causes to the washer motor to run, and the window washer is jetted.

This causes current to flow to washer continuous operation circuit in TERMINAL 17 of the wiper and washer SW to TERMINAL 7 to TERMINAL 5 of the wiper motor to TERMINAL 4 to GROUND and the wiper functions.

SERVICE HINTS

C17 WIPER AND WASHER SW [COMB. SW]

2–GROUND : Always continuity
17–GROUND : Approx. **12** volts with ignition SW at **ON** position
7–GROUND : Approx. **12** volts with wiper and washer SW at **LOW** position
Approx. **12** volts every approx. **1.6** to **10.7** seconds intermittently with wiper SW at **INT** position
16–GROUND : Approx. **12** volts with ignition SW on unless wiper motor at **STOP** position
8–GROUND : Approx. **12** volts with ignition SW on and wiper and washer SW at **HIGH** position
11–2 : Continuity with washer SW on

W4 WIPER MOTOR

1–2 : Closed unless wiper motor at **STOP** position

: PARTS LOCATION

Code	See Page	Code	See Page	Code	See Page
C11	34	J13	35	W4	31 (2UZ–FE)
C17	34	W2	31 (2UZ–FE)		33 (5VZ–FE)
J3	35		33 (5VZ–FE)		

: JUNCTION BLOCK AND WIRE HARNESS CONNECTOR

Code	See Page	Junction Block and Wire Harness (Connector Location)
1E	22 (*2)	Engine Room Main Wire and Driver Side J/B (Lower Finish Panel)
	26 (*1)	
1F	22 (*2)	Cowl Wire and Driver Side J/B (Lower Finish Panel)
	26 (*1)	
1G	22 (*2)	
	26 (*1)	

: CONNECTOR JOINING WIRE HARNESS AND WIRE HARNESS

Code	See Page	Joining Wire Harness and Wire Harness (Connector Location)
IA4	44	Engine Room Main Wire and Cowl Wire (Left Kick Panel)

* 1 : w/ Daytime Running Light * 2 : w/o Daytime Running Light * 3 : Bench Seat * 4 : Separate Seat, Captain Seat (w/o Power Seat)

WIPER AND WASHER (w/ INT TIME SW MECHANISM)

▽ **: GROUND POINTS**

Code	See Page	Ground Points Location
EA	40 (2UZ–FE)	Front Left Fender
	42 (5VZ–FE)	
IF	44	Left Kick Panel
II	44	Right Kick Panel

WIPER AND WASHER (w/o INT TIME SW MECHANISM)

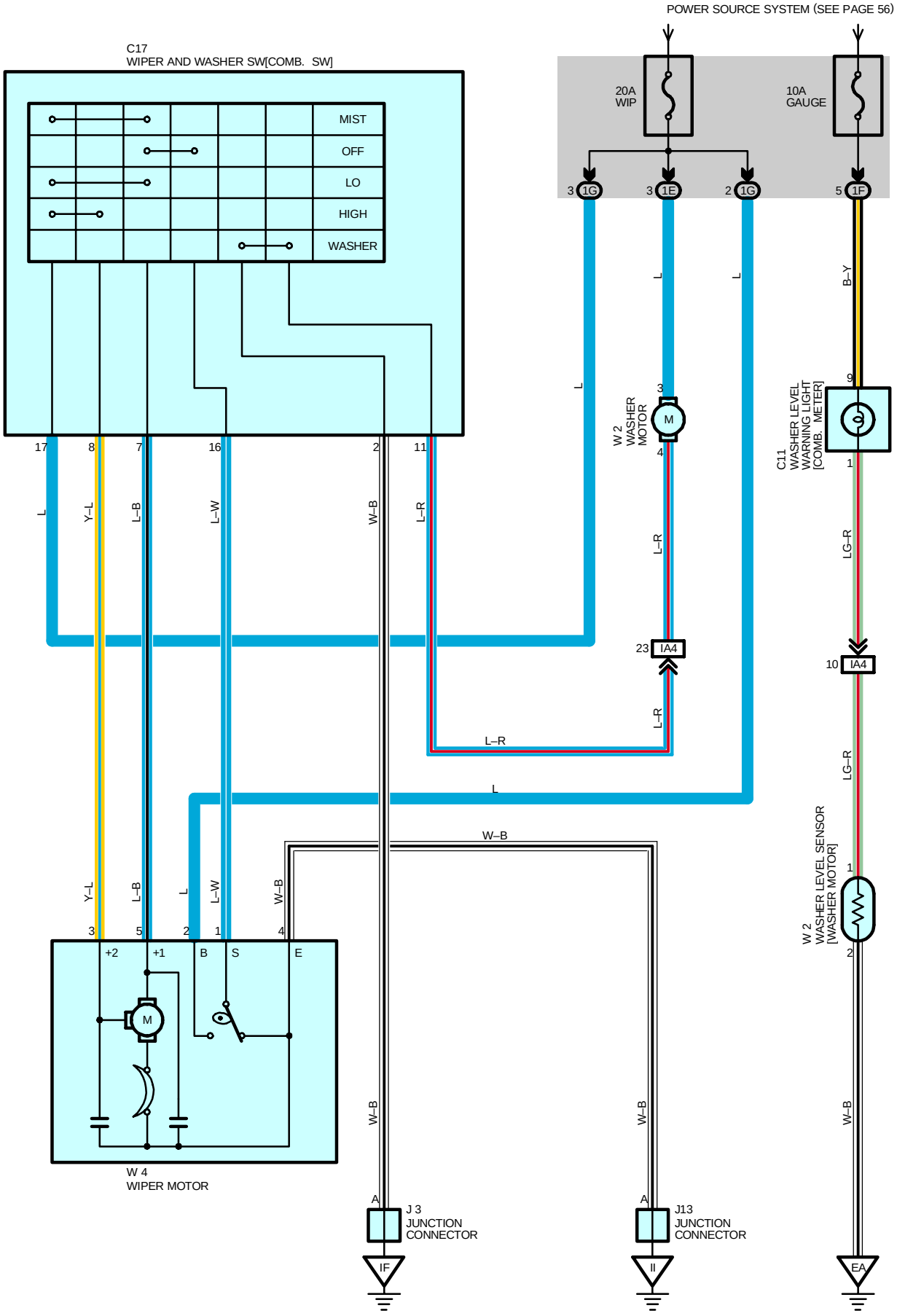

SYSTEM OUTLINE

With the ignition SW turned on, current flows to TERMINAL 17 of the wiper and washer SW, TERMINAL 3 of the washer motor and TERMINAL 2 of the wiper motor through the WIP fuse.

1. LOW SPEED POSITION

With wiper SW turned to LOW position, current flows from TERMINAL 17 of the wiper and washer SW to TERMINAL 7 to TERMINAL 5 of the wiper motor to TERMINAL 4 to GROUND and causes the wiper motor to run at low speed.

2. HIGH SPEED POSITION

With wiper SW turned to HIGH position, current flows from TERMINAL 17 of the wiper and washer SW to TERMINAL 8 to TERMINAL 3 of the wiper motor to TERMINAL 4 to GROUND and causes the motor to run at high speed.

3. MIST POSITION

With the wiper SW turned to MIST position, current flows from TERMINAL 17 of the wiper and washer SW to TERMINAL 7 to TERMINAL 5 of the wiper motor to TERMINAL 4 to GROUND and causes the wiper motor to run at low speed.

4. WASHER INTERLOCKING OPERATION

With the washer SW turned to on, current flows from TERMINAL 3 of the washer motor to TERMINAL 4 to TERMINAL 11 of the wiper and washer SW to TERMINAL 2 to GROUND and causes to the washer motor to run, and the window washer is jetted.

SERVICE HINTS

C17 WIPER AND WASHER SW [COMB. SW]

2–GROUND : Always continuity
17–GROUND : Approx. **12** volts with ignition SW at **ON** position
7–GROUND : Approx. **12** volts with wiper and washer SW at **LOW** or **MIST** position
16–GROUND : Approx. **12** volts with ignition SW on unless wiper motor at **STOP** position
8–GROUND : Approx. **12** volts with ignition SW on and wiper and washer SW at **HIGH** position
11–GROUND : Continuity with washer SW on

W4 WIPER MOTOR

1–2 : Closed unless wiper motor at **STOP** position

: PARTS LOCATION

Code	See Page	Code	See Page	Code	See Page
C11	34	J13	35	W4	31 (2UZ–FE)
C17	34	W2	31 (2UZ–FE)		33 (5VZ–FE)
J3	35		33 (5VZ–FE)		

: JUNCTION BLOCK AND WIRE HARNESS CONNECTOR

Code	See Page	Junction Block and Wire Harness (Connector Location)
1E	22 (*2)	Engine Room Main Wire and Driver Side J/B (Lower Finish Panel)
	26 (*1)	
1F	22 (*2)	Cowl Wire and Driver Side J/B (Lower Finish Panel)
	26 (*1)	
1G	22 (*2)	
	26 (*1)	

: CONNECTOR JOINING WIRE HARNESS AND WIRE HARNESS

Code	See Page	Joining Wire Harness and Wire Harness (Connector Location)
IA4	44	Engine Room Main Wire and Cowl Wire (Left Kick Panel)

: GROUND POINTS

Code	See Page	Ground Points Location
EA	40 (2UZ–FE)	Front Left Fender
	42 (5VZ–FE)	
IF	44	Left Kick Panel
II	44	Right Kick Panel

* 1 : w/ Daytime Running Light * 2 : w/o Daytime Running Light * 3 : Bench Seat * 4 : Separate Seat, Captain Seat (w/o Power Seat)

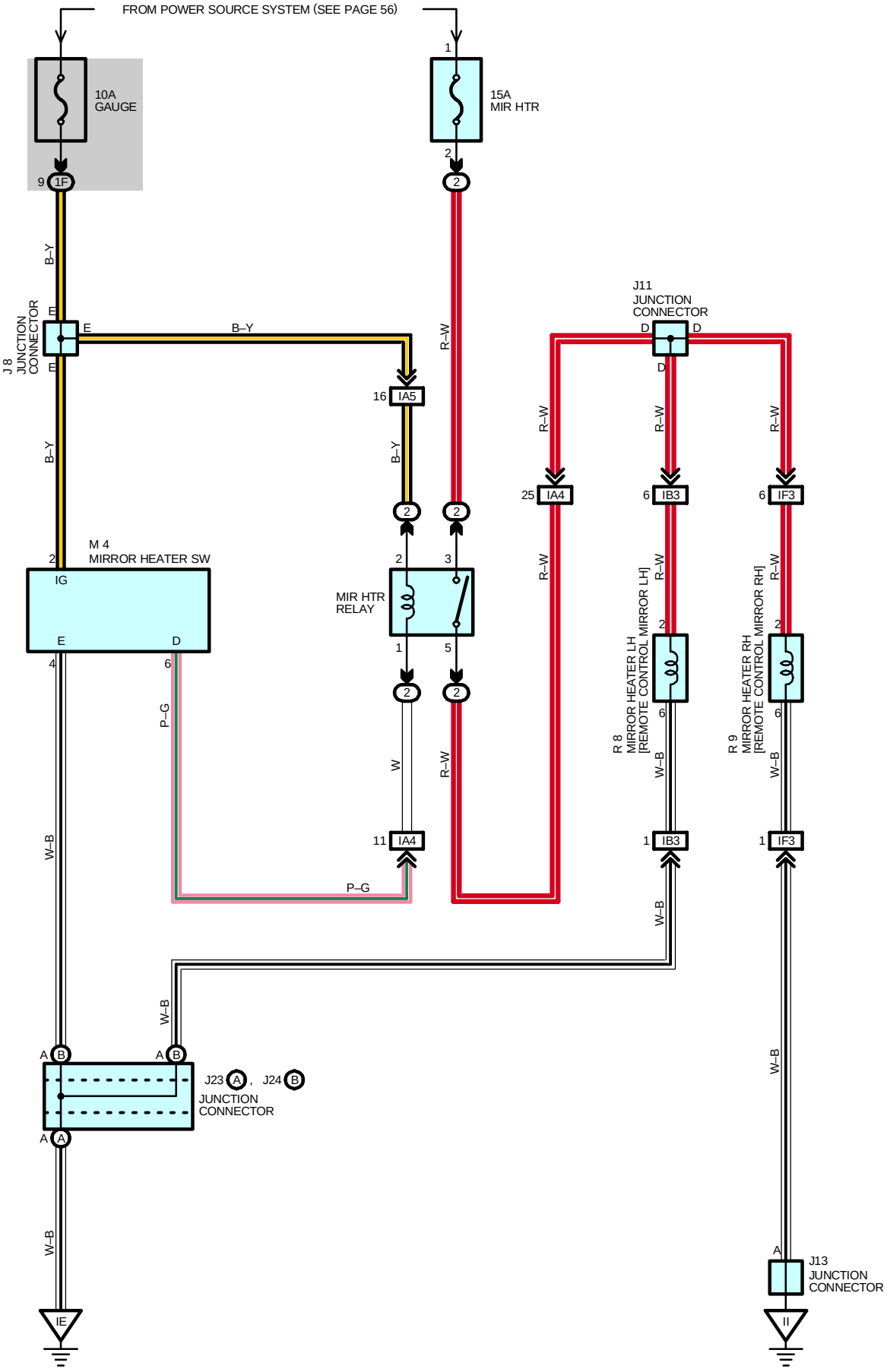
FROM POWER SOURCE SYSTEM (SEE PAGE 56)
10A
GAUGE
15A
MIR HTR
9 1F
1
2
2
B–Y
R–W
J 8
JUNCTION
CONNECTOR
E
B–Y
16 IA5
J11
JUNCTION
CONNECTOR
D
D
D
R–W
R–W
R–W
25 IA4
6 IB3
6 IF3
M 4
MIRROR HEATER SW
IG
E
D
2
4
6
MIR HTR
RELAY
2
3
1
5
P–G
W
R–W
R–W
R–W
R 8
MIRROR HEATER LH
[REMOTE CONTROL MIRROR LH]
R 9
MIRROR HEATER RH
[REMOTE CONTROL MIRROR RH]
11 IA4
1 IB3
1 IF3
W–B
W–B
W–B
W–B
P–G
A B
A B
J23 A , J24 B
JUNCTION
CONNECTOR
A A
W–B
W–B
A
J13
JUNCTION
CONNECTOR
IE
II

SERVICE HINTS

MIR HTR RELAY

5–3 : Closed with the ignition SW on and the mirror heater SW on

M2 MIRROR HEATER SW

2–GROUND : Approx. **12** volts with the ignition SW on
4–GROUND : Always continuity

R8, R9 MIRROR HEATER LH, RH [REMOTE CONTROL MIRROR LH, RH]

2–GROUND : Approx. **12** volts with the ignition SW on and the mirror heater SW on
6–GROUND : Always continuity

: PARTS LOCATION

Code	See Page	Code	See Page	Code	See Page
J8	35	J24 B	35	R9	36 (Access Cab)
J11	35	M4	35		37 (Standard Cab)
J13	35	R8	36 (Access Cab)		
J23 A	35		37 (Standard Cab)		

: RELAY BLOCKS

Code	See Page	Relay Blocks (Relay Block Location)
2	21	Engine Room R/B (Engine Compartment Left)

: JUNCTION BLOCK AND WIRE HARNESS CONNECTOR

Code	See Page	Junction Block and Wire Harness (Connector Location)
1F	22 (*2)	Cowl Wire and Driver Side J/B (Lower Finish Panel)
	26 (*1)	

: CONNECTOR JOINING WIRE HARNESS AND WIRE HARNESS

Code	See Page	Joining Wire Harness and Wire Harness (Connector Location)
IA4	44	Engine Room Main Wire and Cowl Wire (Left Kick Panel)
IA5		
IB3	44	Front Door LH Wire and Cowl Wire (Left Kick Panel)
IF3	46	Front Door RH Wire and Cowl Wire (Right Kick Panel)

: GROUND POINTS

Code	See Page	Ground Points Location
IE	44	Left Kick Panel
II	44	Right Kick Panel

* 1 : w/ Daytime Running Light * 2 : w/o Daytime Running Light * 3 : Bench Seat * 4 : Separate Seat, Captain Seat (w/o Power Seat)

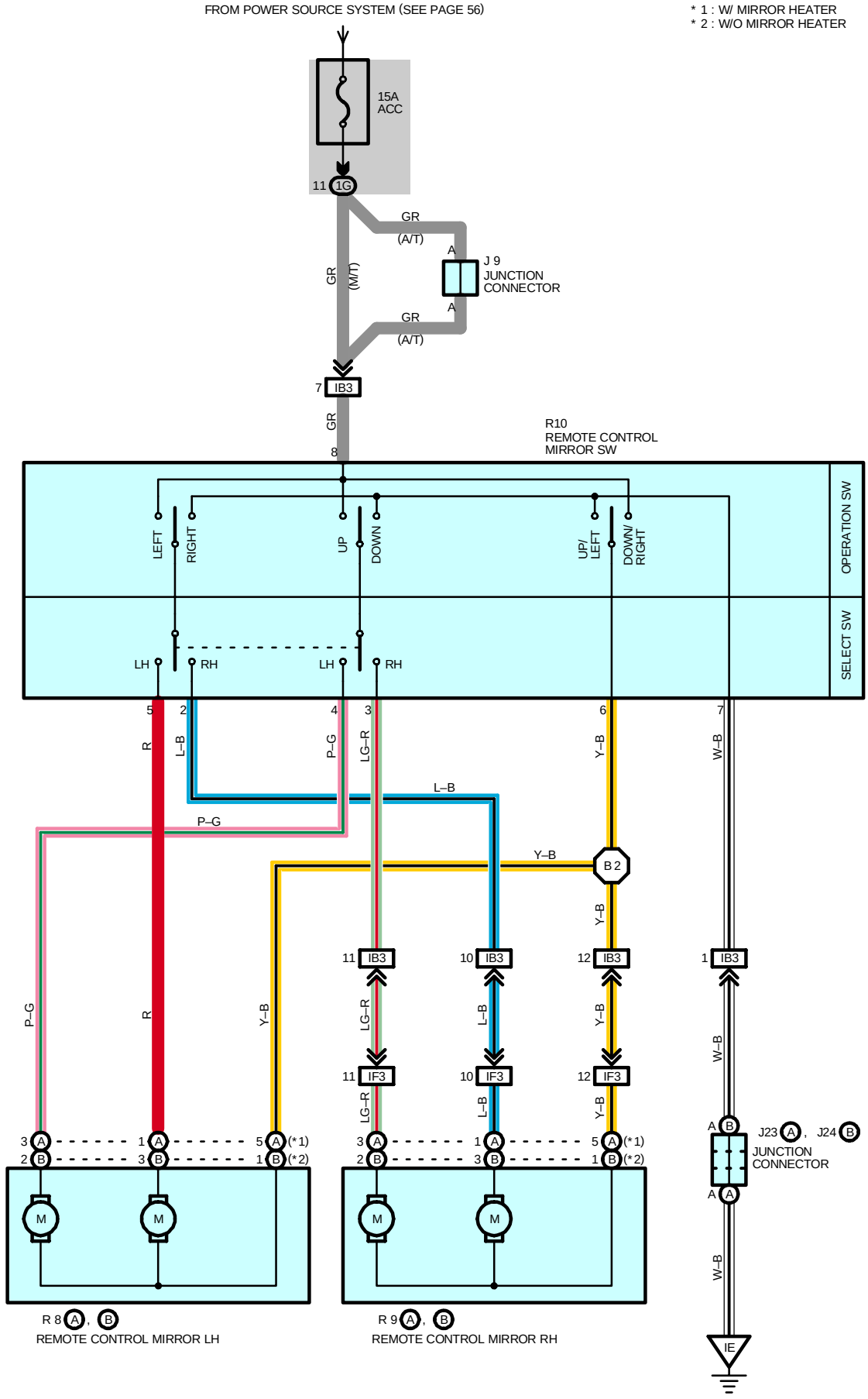
FROM POWER SOURCE SYSTEM (SEE PAGE 56)
* 1 : W/ MIRROR HEATER
* 2 : W/O MIRROR HEATER
15A
ACC
11 1G
GR
(A/T)
GR
(M/T)
A
J 9
JUNCTION
CONNECTOR
A
GR
(A/T)
7 IB3
GR
8
R10
REMOTE CONTROL
MIRROR SW
LEFT
RIGHT
UP
DOWN
UP/
LEFT
DOWN/
RIGHT
OPERATION SW
SELECT SW
LH
RH
LH
RH
5
2
4
3
6
7
R
L–B
P–G
LG–R
Y–B
W–B
L–B
P–G
Y–B
B 2
Y–B
11 IB3
10 IB3
12 IB3
1 IB3
P–G
R
Y–B
LG–R
L–B
Y–B
W–B
11 IF3
10 IF3
12 IF3
LG–R
L–B
Y–B
A
B
J23 A , J24 B
JUNCTION
CONNECTOR
A
A
W–B
IE
3 A
2 B
1 A
3 B
5 A (*1)
1 B (*2)
M
M
R 8 A , B
REMOTE CONTROL MIRROR LH
R 9 A , B
REMOTE CONTROL MIRROR RH

SERVICE HINTS

R10 REMOTE CONTROL MIRROR SW

8–GROUND : Approx. **12** volts with ignition SW at **ACC** or **ON** position
6–7 : Continuity with operation SW at **UP** or **LEFT** position
8–6 : Continuity with operation SW at **DOWN** or **RIGHT** position

: PARTS LOCATION

Code		See Page	Code		See Page	Code		See Page
J9		35	R8	A	37 (Standard Cab)	R9	B	37 (Standard Cab)
J23	A	35		B	37 (Standard Cab)	R10		36 (Access Cab)
J24	B	35	R9	A	36 (Access Cab)			37 (Standard Cab)
R8	A	36 (Access Cab)			37 (Standard Cab)			
	B	36 (Access Cab)		B	36 (Access Cab)			

: JUNCTION BLOCK AND WIRE HARNESS CONNECTOR

Code	See Page	Junction Block and Wire Harness (Connector Location)
1G	22 (*2)	Cowl Wire and Driver Side J/B (Lower Finish Panel)
	26 (*1)	

: CONNECTOR JOINING WIRE HARNESS AND WIRE HARNESS

Code	See Page	Joining Wire Harness and Wire Harness (Connector Location)
IB3	44	Front Door LH Wire and Cowl Wire (Left Kick Panel)
IF3	46	Front Door RH Wire and Cowl Wire (Right Kick Panel)

: GROUND POINTS

Code	See Page	Ground Points Location
IE	44	Left Kick Panel

: SPLICE POINTS

Code	See Page	Wire Harness with Splice Points	Code	See Page	Wire Harness with Splice Points
B2	48 (Access Cab)	Front Door LH Wire	B2	50 (Standard Cab)	Front Door LH Wire

* 1 : w/ Daytime Running Light * 2 : w/o Daytime Running Light * 3 : Bench Seat * 4 : Separate Seat, Captain Seat (w/o Power Seat)

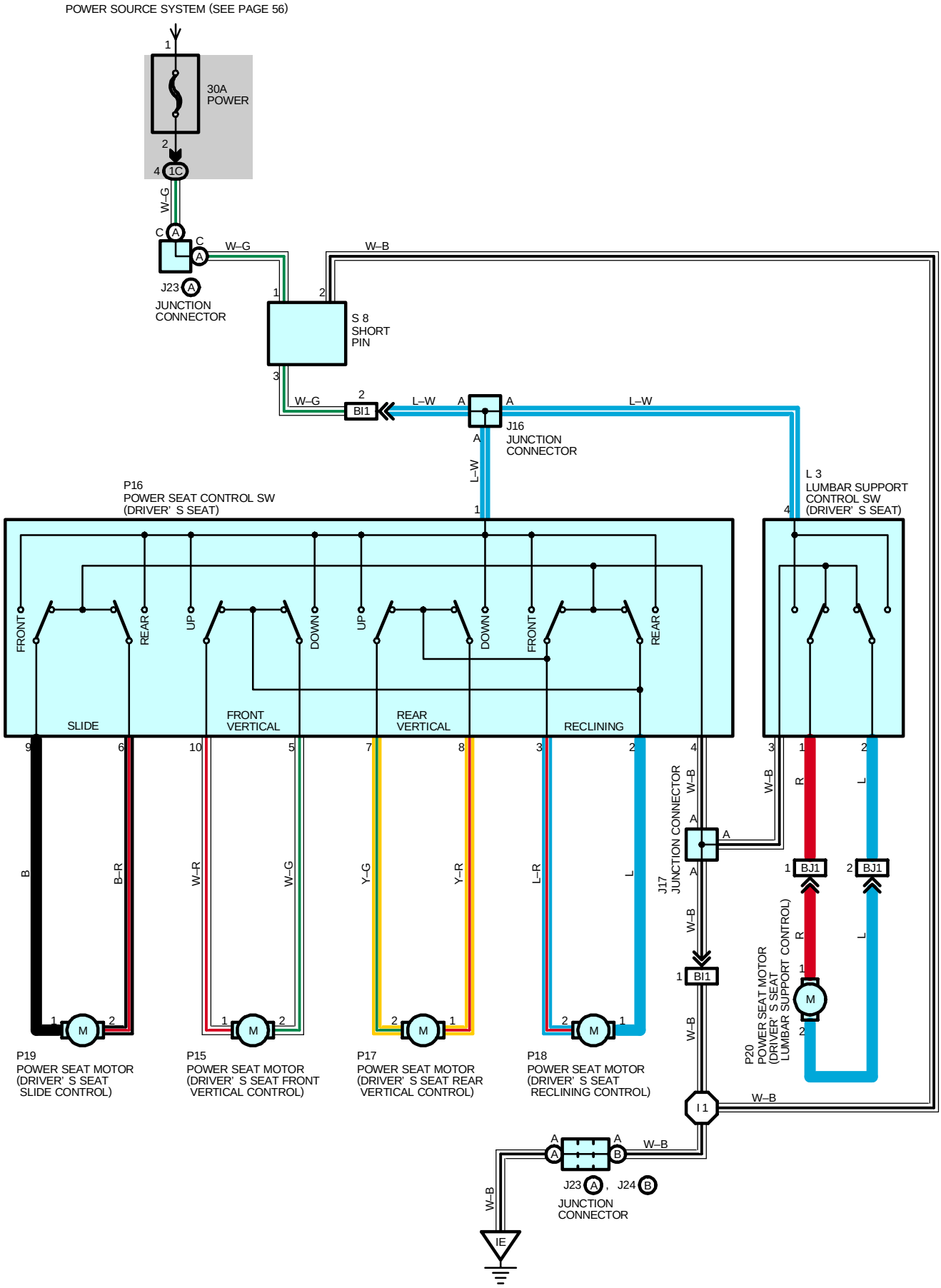
POWER SOURCE SYSTEM (SEE PAGE 56)
30A
POWER
1C
W–G
J23
JUNCTION
CONNECTOR
S 8
SHORT
PIN
W–B
BI1
L–W
J16
JUNCTION
CONNECTOR
P16
POWER SEAT CONTROL SW
(DRIVER' S SEAT)
L 3
LUMBAR SUPPORT
CONTROL SW
(DRIVER' S SEAT)
FRONT
REAR
UP
DOWN
SLIDE
FRONT
VERTICAL
REAR
VERTICAL
RECLINING
J17
JUNCTION CONNECTOR
BJ1
I 1
IE
J24
P19
POWER SEAT MOTOR
(DRIVER' S SEAT
SLIDE CONTROL)
P15
POWER SEAT MOTOR
(DRIVER' S SEAT FRONT
VERTICAL CONTROL)
P17
POWER SEAT MOTOR
(DRIVER' S SEAT REAR
VERTICAL CONTROL)
P18
POWER SEAT MOTOR
(DRIVER' S SEAT
RECLINING CONTROL)
P20
POWER SEAT MOTOR
(DRIVER' S SEAT
LUMBAR SUPPORT CONTROL)

SERVICE HINTS

P16 POWER SEAT CONTROL SW (DRIVER'S SEAT)

1–9 : Closed with driver's seat at front slide operation
1–6 : Closed with driver's seat at rear slide operation
1–3 : Closed with driver's seat at front reclining operation
1–2 : Closed with driver's seat at rear reclining operation
1–10 : Closed with driver's seat at front vertical up operation
1–5 : Closed with driver's seat at front vertical down operation
1–7 : Closed with driver's seat at rear vertical up operation
1–8 : Closed with driver's seat at rear vertical down operation
4–GROUND : Always continuity

: PARTS LOCATION

Code		See Page	Code	See Page	Code	See Page
J16		38	L3	38	P18	38
J17		38	P15	38	P19	38
J23	A	35	P16	38	P20	38
J24	B	35	P17	38	S8	35

: JUNCTION BLOCK AND WIRE HARNESS CONNECTOR

Code	See Page	Junction Block and Wire Harness (Connector Location)
1C	22 (*2)	Cowl Wire and Driver Side J/B (Lower Finish Panel)
	26 (*1)	

: CONNECTOR JOINING WIRE HARNESS AND WIRE HARNESS

Code	See Page	Joining Wire Harness and Wire Harness (Connector Location)
BI1	48 (Access Cab)	Cowl Wire and Seat No.1 Wire (Under the Driver's Seat)
	50 (Standard Cab)	
	52	
BJ1	52	Seat No.1 Wire and Seat No.2 Wire (Under the Driver's Seat)

: GROUND POINTS

Code	See Page	Ground Points Location
IE	44	Left Kick Panel

: SPLICE POINTS

Code	See Page	Wire Harness with Splice Points	Code	See Page	Wire Harness with Splice Points
I1	46	Cowl Wire			

* 1 : w/ Daytime Running Light * 2 : w/o Daytime Running Light * 3 : Bench Seat * 4 : Separate Seat, Captain Seat (w/o Power Seat)

RADIO AND PLAYER

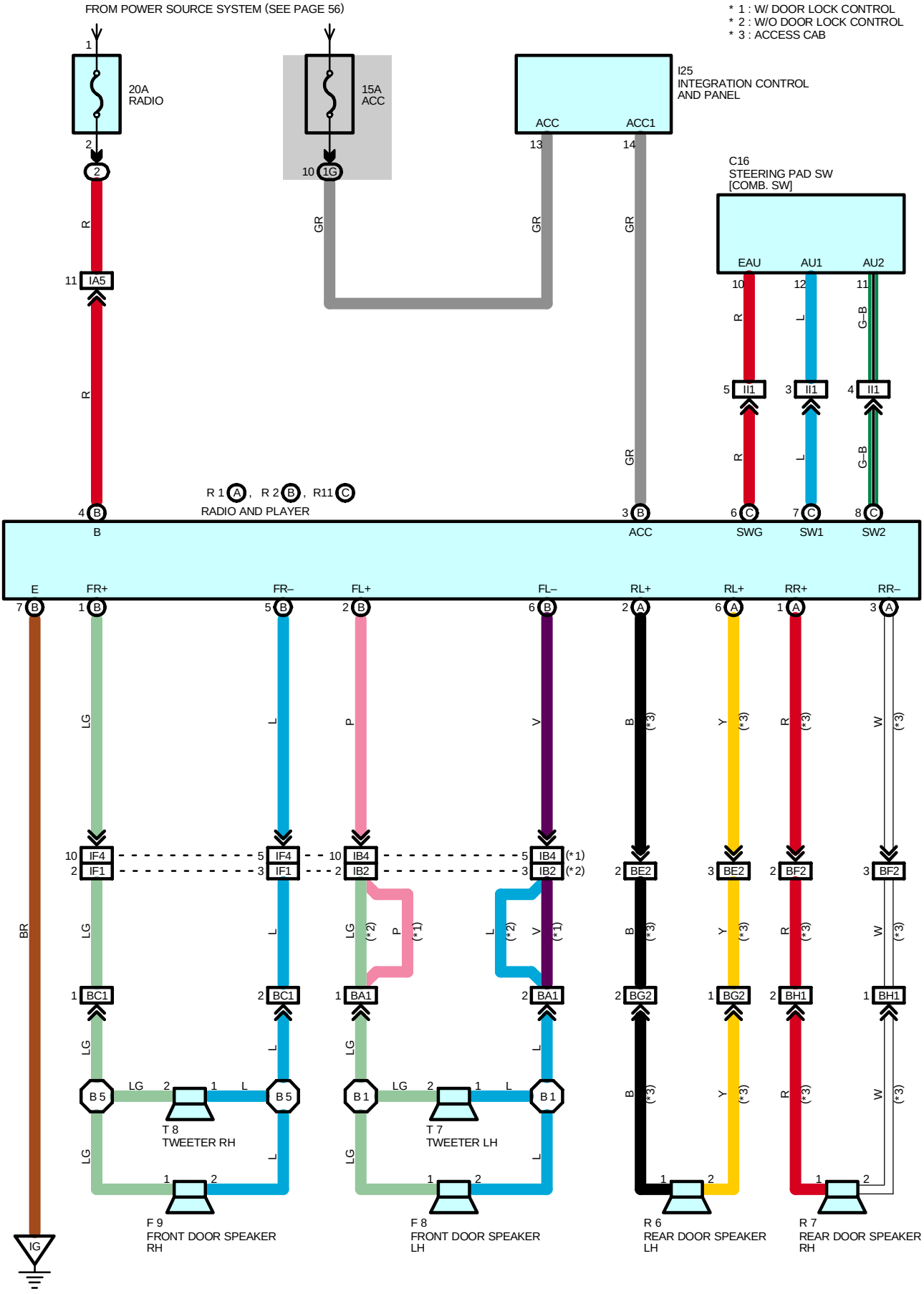

SERVICE HINTS

R2 (B) RADIO AND PLAYER

(B) 3–GROUND : Approx. **12** volts with ignition SW at **ON** or **ACC** position
(B) 4–GROUND : Always approx. **12** volts
(B) 7–GROUND : Always continuity

S7 (D) STEREO COMPONENT AMPLIFIER

(D) 3–GROUND : Approx. **12** volts with ignition SW at **ON** or **ACC** position
(D) 4–GROUND : Always approx. **12** volts
(D) 7–GROUND : Always continuity

: PARTS LOCATION

Code	See Page	Code	See Page	Code	See Page
C16	34	I25	35	R11 C	35
F8	36 (Access Cab)	R1 A	35	T7	36 (Access Cab)
	37 (Standard Cab)	R2 B	35		37 (Standard Cab)
F9	36 (Access Cab)	R6	36 (Access Cab)	T8	36 (Access Cab)
	37 (Standard Cab)	R7	36 (Access Cab)		37 (Standard Cab)

: RELAY BLOCKS

Code	See Page	Relay Blocks (Relay Block Location)
2	21	Engine Room R/B (Engine Compartment Left)

: JUNCTION BLOCK AND WIRE HARNESS CONNECTOR

Code	See Page	Junction Block and Wire Harness (Connector Location)
1G	22 (*2)	Cowl Wire and Driver Side J/B (Lower Finish Panel)
	26 (*1)	

: CONNECTOR JOINING WIRE HARNESS AND WIRE HARNESS

Code	See Page	Joining Wire Harness and Wire Harness (Connector Location)
IA5	44	Engine Room Main Wire and Cowl Wire (Left Kick Panel)
IB2	44	Front Door LH Wire and Cowl Wire (Left Kick Panel)
IB4		
IF1	46	Front Door RH Wire and Cowl Wire (Right Kick Panel)
IF4		
II1	46	Cowl Wire and Cowl Wire (Instrument Panel Reinforcement RH)
BA1	48 (Access Cab)	Front Door LH Wire and Speaker Tweeter Wire LH (Inside of Front Door LH)
	50 (Standard Cab)	
BC1	48 (Access Cab)	Front Door RH Wire and Speaker Tweeter Wire RH (Inside of Front Door RH)
	50 (Standard Cab)	
BE2	48 (Access Cab)	Floor No.2 Wire and Cowl Wire (Center of Left Rocker Panel)
BF2	48 (Access Cab)	Floor No.1 Wire and Cowl Wire (Center of Right Rocker Panel)
BG2	48 (Access Cab)	Floor No.2 Wire and Rear Door No.1 Wire LH (Under the Left Quarter Panel)
BH1	48 (Access Cab)	Floor No.1 Wire and Rear Door No.1 Wire RH (Under the Right Quarter Panel)

: GROUND POINTS

Code	See Page	Ground Points Location
IG	44	Instrument Panel Brace RH

: SPLICE POINTS

Code	See Page	Wire Harness with Splice Points	Code	See Page	Wire Harness with Splice Points
B1	48 (Access Cab)	Speaker Tweeter Wire LH	B5	48 (Access Cab)	Speaker Tweeter Wire RH
	50 (Standard Cab)			50 (Standard Cab)	

* 1 : w/ Daytime Running Light * 2 : w/o Daytime Running Light * 3 : Bench Seat * 4 : Separate Seat, Captain Seat (w/o Power Seat)

COMBINATION METER

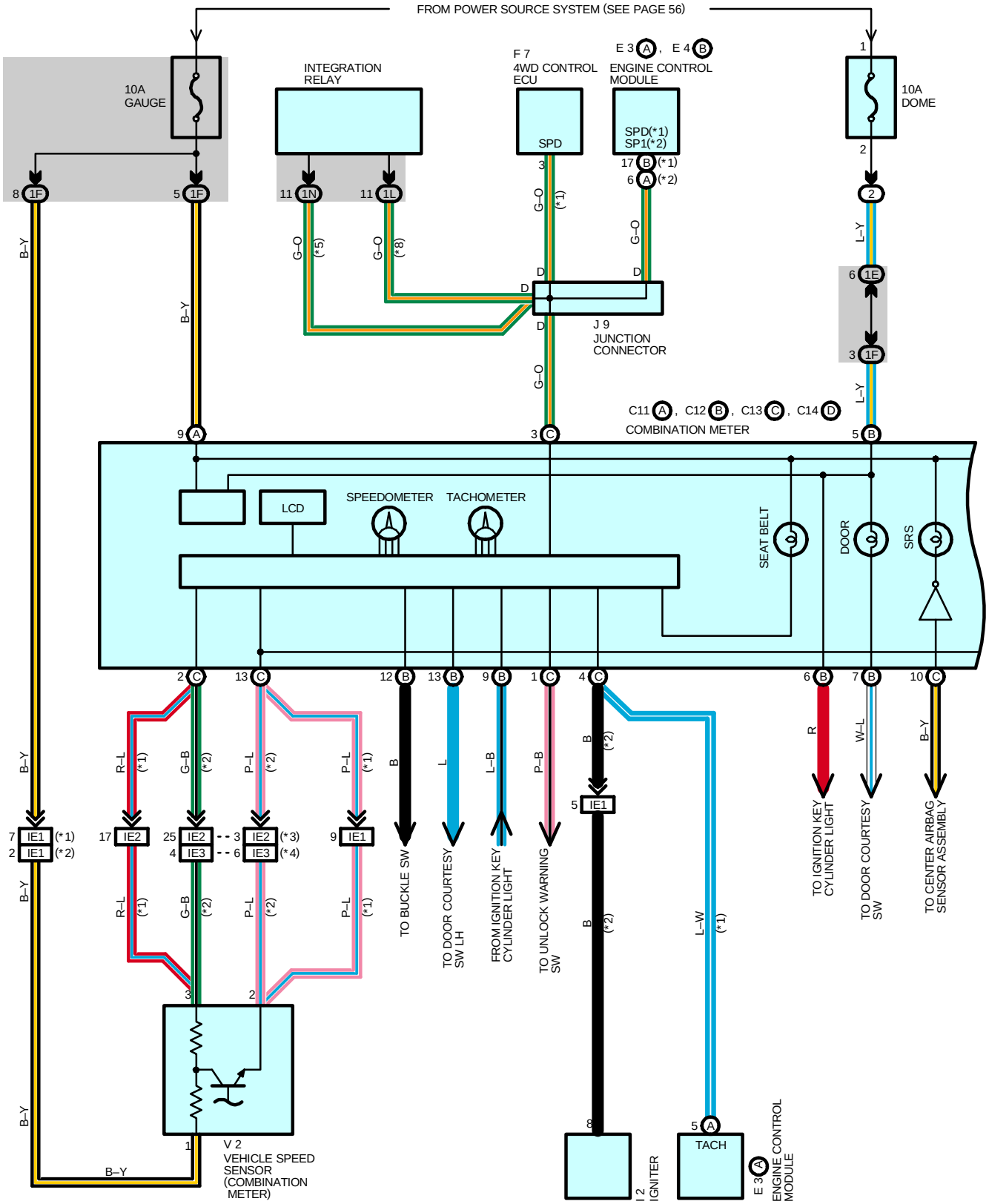

* 1 : 2UZ–FE
* 2 : 5VZ–FE
* 3 : 5VZ–FE A/T
* 4 : 5VZ–FE M/T
* 5 : W/ DAYTIME RUNNING LIGHT
* 6 : W/ TACHOMETER
* 7 : W/O TACHOMETER
* 8 : W/O DAYTIME RUNNING LIGHT

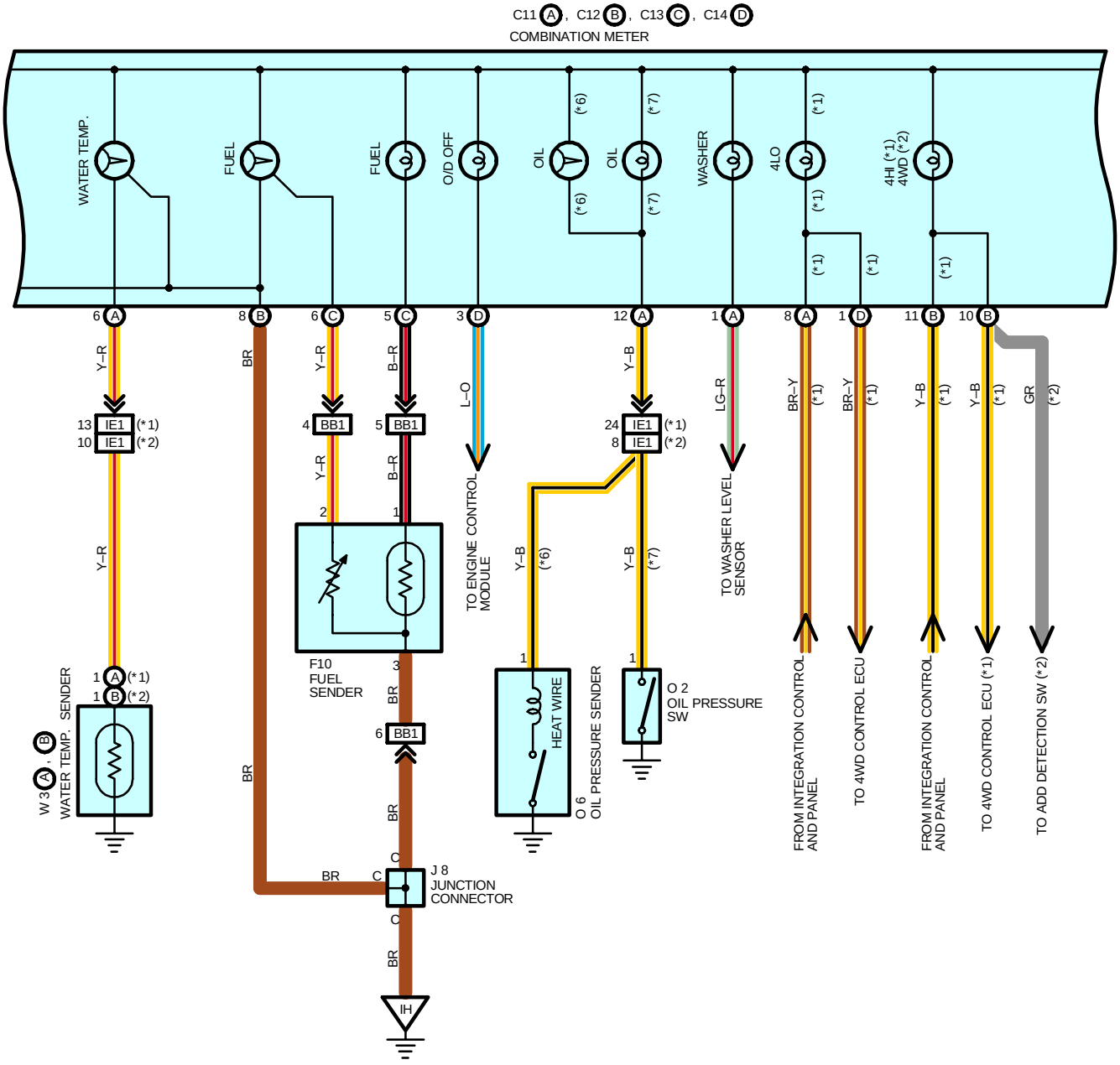

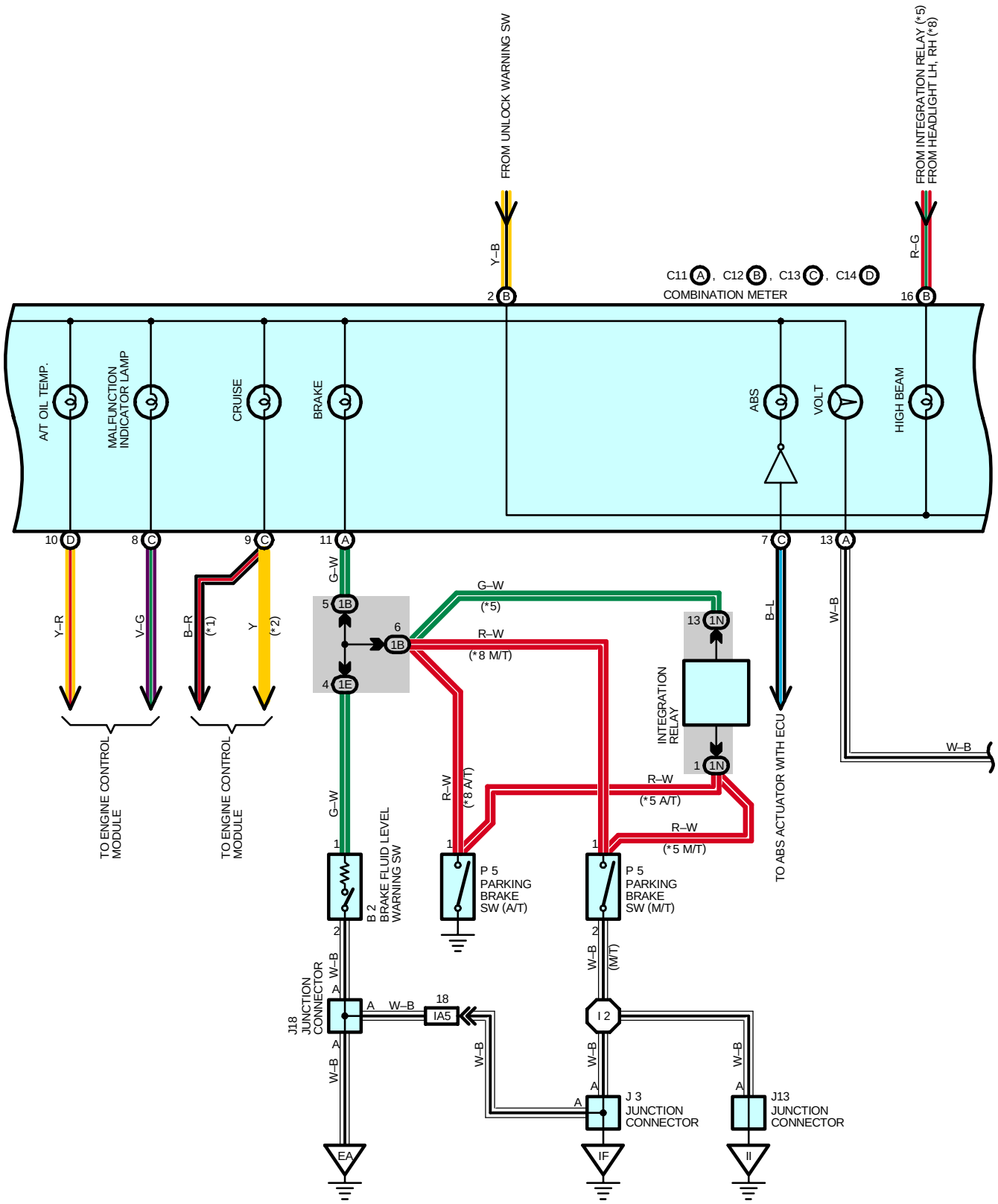
FROM UNLOCK WARNING SW
FROM INTEGRATION RELAY (*5)
FROM HEADLIGHT LH, RH (*8)
Y–B
R–G
C11 A , C12 B , C13 C , C14 D
COMBINATION METER
2 B
16 B
A/T OIL TEMP.
MALFUNCTION INDICATOR LAMP
CRUISE
BRAKE
ABS
VOLT
HIGH BEAM
10 D
8 C
9 C
11 A
7 C
13 A
Y–R
V–G
B–R
(*1)
Y
(*2)
G–W
5 1B
6 1B
4 1E
G–W
(*5)
R–W
(*8 M/T)
13 1N
1 1N
INTEGRATION RELAY
B–L
W–B
W–B
TO ENGINE CONTROL MODULE
TO ENGINE CONTROL MODULE
TO ABS ACTUATOR WITH ECU
R–W
(*8 A/T)
R–W
(*5 A/T)
R–W
(*5 M/T)
1
2
B 2
BRAKE FLUID LEVEL WARNING SW
P 5
PARKING BRAKE SW (A/T)
P 5
PARKING BRAKE SW (M/T)
W–B
(M/T)
J18
JUNCTION CONNECTOR
A
W–B
18
IA5
I 2
W–B
W–B
W–B
J 3
JUNCTION CONNECTOR
J13
JUNCTION CONNECTOR
EA
IF
II

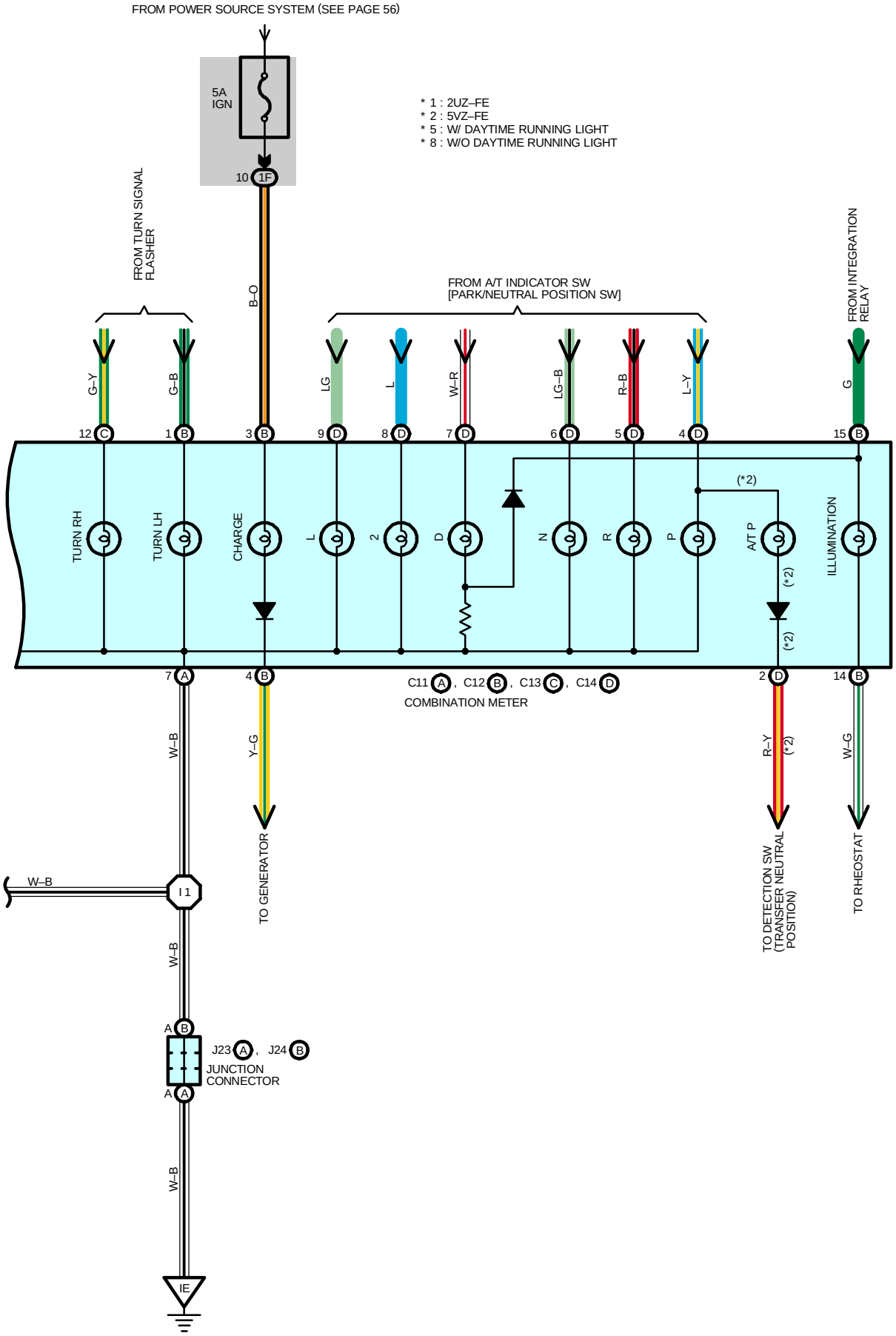
FROM POWER SOURCE SYSTEM (SEE PAGE 56)
5A
IGN
10 1F
B–O
FROM TURN SIGNAL FLASHER
* 1 : 2UZ–FE
* 2 : 5VZ–FE
* 5 : W/ DAYTIME RUNNING LIGHT
* 8 : W/O DAYTIME RUNNING LIGHT
FROM A/T INDICATOR SW [PARK/NEUTRAL POSITION SW]
FROM INTEGRATION RELAY
G–Y
G–B
LG
L
W–R
LG–B
R–B
L–Y
G
12 C
1 B
3 B
9 D
8 D
7 D
6 D
5 D
4 D
15 B
TURN RH
TURN LH
CHARGE
L
2
D
N
R
P
A/T P
ILLUMINATION
(*2)
7 A
4 B
2 D
14 B
C11 A , C12 B , C13 C , C14 D
COMBINATION METER
W–B
Y–G
R–Y
W–G
TO GENERATOR
TO DETECTION SW (TRANSFER NEUTRAL POSITION)
TO RHEOSTAT
W–B
I 1
W–B
A B
J23 A , J24 B
JUNCTION CONNECTOR
A A
W–B
IE

COMBINATION METER

SERVICE HINTS

B2 BRAKE FLUID LEVEL WARNING SW

1–2 : Closed with float down

P5 PARKING BRAKE SW

1–GROUND : Closed with parking brake lever pulled up

C11 (A), C12 (B), C13 (C) COMBINATION METER

(B) 5–GROUND : Always approx. **12** volts

(A) 9, (B) 3–GROUND : Approx. **12** volts with ignition SW at **ON** or **ST** position

(A) 7, (A)13, (B) 8–GROUND : Always continuity

W3 (A), (B) WATER TEMP. SENDER

(A) 1, (B) 1-GROUND : Approx. **160**–**240** Ω (**50**°C, **122**°F)

: Approx. **17.1**–**21.2** Ω (**120**°C, **248**°F)

: PARTS LOCATION

Code		See Page	Code	See Page	Code		See Page
B2		30 (2UZ–FE)	F10	36 (Access Cab)	J23	A	35
		32 (5VZ–FE)		37 (Standard Cab)	J24	B	35
C11	A	34	I2	33 (5VZ–FE)	O2		31 (2UZ–FE)
C12	B	34	J3	35			33 (5VZ–FE)
C13	C	34	J8	35	P5		35
C14	D	34	J9	35	V2		31 (2UZ–FE)
E3	A	34	J13	35			33 (5VZ–FE)
E4	B	34	J18	31 (2UZ–FE)	W3	A	31 (2UZ–FE)
F7		35		33 (5VZ–FE)		B	33 (5VZ–FE)

: RELAY BLOCKS

Code	See Page	Relay Blocks (Relay Block Location)
2	21	Engine Room R/B (Engine Compartment Left)

: JUNCTION BLOCK AND WIRE HARNESS CONNECTOR

Code	See Page	Junction Block and Wire Harness (Connector Location)
1B	22 (*2)	Cowl Wire and Driver Side J/B (Lower Finish Panel)
	26 (*1)	
1E	22 (*2)	Engine Room Main Wire and Driver Side J/B (Lower Finish Panel)
	26 (*1)	
1F	22 (*2)	Cowl Wire and Driver Side J/B (Lower Finish Panel)
	26 (*1)	
1L	23 (*2)	
1N	27 (*1)	

: CONNECTOR JOINING WIRE HARNESS AND WIRE HARNESS

Code	See Page	Joining Wire Harness and Wire Harness (Connector Location)
IA5	44	Engine Room Main Wire and Cowl Wire (Left Kick Panel)
IE1	46	Engine Wire and Cowl Wire (Right Side of Instrument Panel)
IE2		
IE3		
BB1	48 (Access Cab)	Frame Wire and Cowl Wire (Under the Driver's Seat)
	50 (Standard Cab)	

* 1 : w/ Daytime Running Light * 2 : w/o Daytime Running Light * 3 : Bench Seat * 4 : Separate Seat, Captain Seat (w/o Power Seat)

: GROUND POINTS

Code	See Page	Ground Points Location
EA	40 (2UZ–FE) 42 (5VZ–FE)	Front Left Fender
IE	44	Left Kick Panel
IF		
IH	44	Right Kick Panel
II		

: SPLICE POINTS

Code	See Page	Wire Harness with Splice Points	Code	See Page	Wire Harness with Splice Points
I1	46	Cowl Wire	I2	46	Cowl Wire

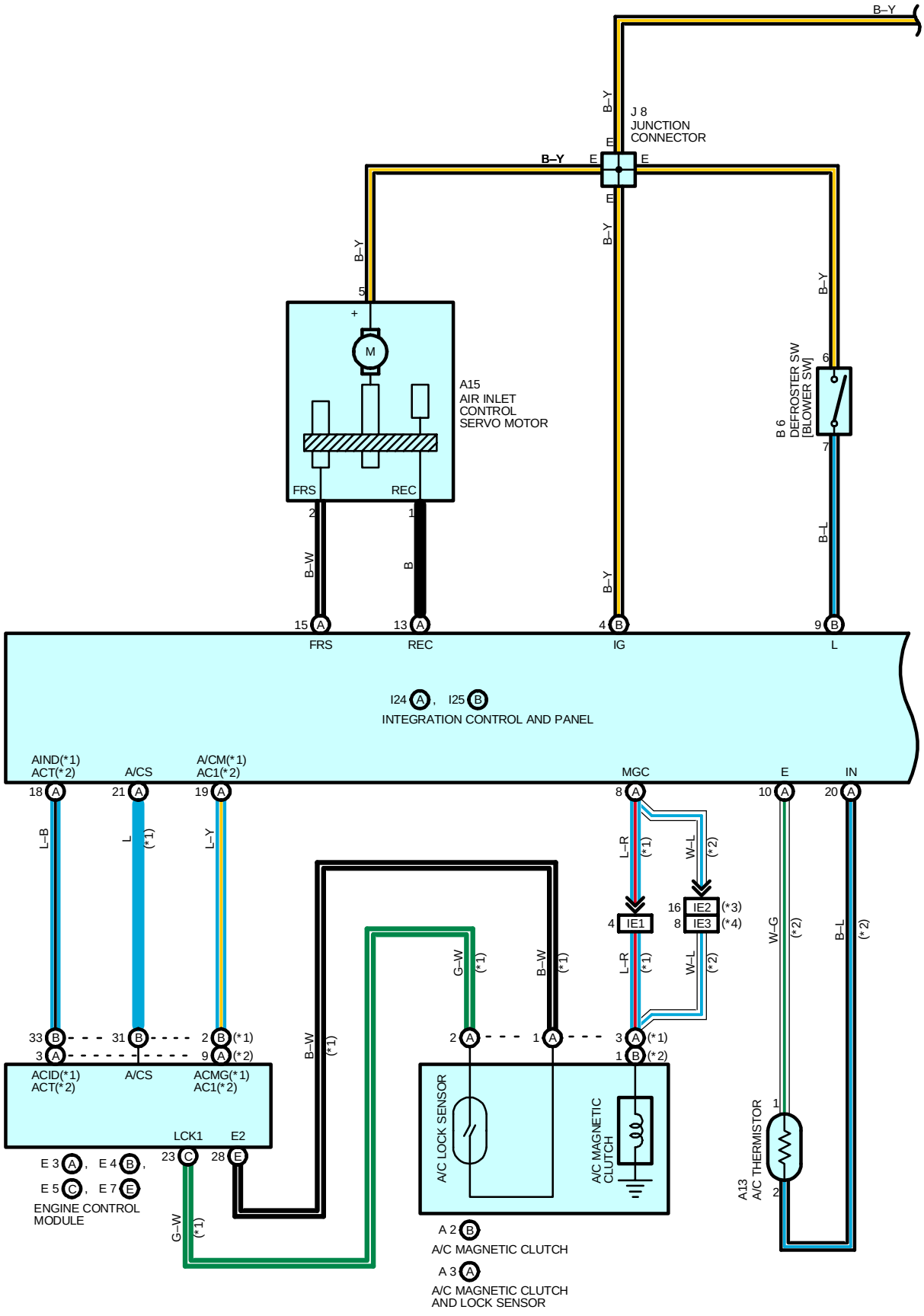
B–Y
J 8
JUNCTION
CONNECTOR
A15
AIR INLET
CONTROL
SERVO MOTOR
FRS
REC
B 6
DEFROSTER SW
[BLOWER SW]
B–W
B
B–L
I24 A , I25 B
INTEGRATION CONTROL AND PANEL
AIND(*1)
ACT(*2)
A/CS
A/CM(*1)
AC1(*2)
MGC
E
IN
L–B
L
(*1)
L–Y
L–R
W–L
(*2)
IE1
IE2
(*3)
IE3
(*4)
G–W
W–G
ACID(*1)
ACT(*2)
ACMG(*1)
AC1(*2)
LCK1
E2
E 3 A , E 4 B ,
E 5 C , E 7 E
ENGINE CONTROL
MODULE
A/C LOCK SENSOR
A/C MAGNETIC
CLUTCH
A13
A/C THERMISTOR
A 2 B
A/C MAGNETIC CLUTCH
A 3 A
A/C MAGNETIC CLUTCH
AND LOCK SENSOR

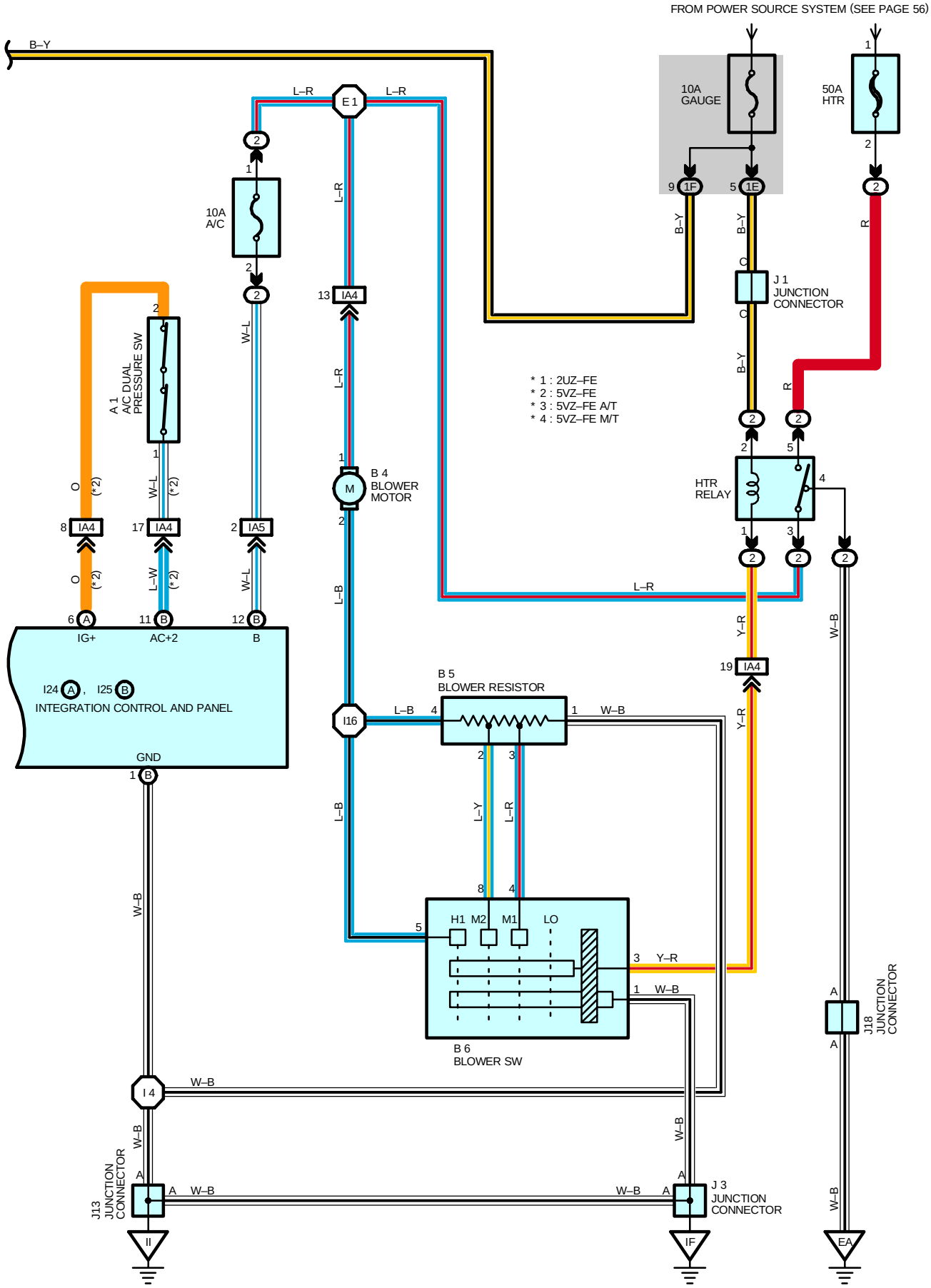
FROM POWER SOURCE SYSTEM (SEE PAGE 56)
B–Y
10A GAUGE
50A HTR
10A A/C
E 1
L–R
J 1 JUNCTION CONNECTOR
A 1 A/C DUAL PRESSURE SW
B 4 BLOWER MOTOR
* 1 : 2UZ–FE
* 2 : 5VZ–FE
* 3 : 5VZ–FE A/T
* 4 : 5VZ–FE M/T
HTR RELAY
B 5 BLOWER RESISTOR
B 6 BLOWER SW
H1 M2 M1 LO
INTEGRATION CONTROL AND PANEL
I24 A , I25 B
IG+
AC+2
B
GND
J18 JUNCTION CONNECTOR
J13 JUNCTION CONNECTOR
J 3 JUNCTION CONNECTOR
W–B
L–B
L–R
L–Y
Y–R
W–L
L–W
O
R

SYSTEM OUTLINE

1. HEATER BLOWER MOTOR OPERATION

Current is applied at all times through the HTR fuse to TERMINAL 5 of the HTR relay.
When the ignition SW is turned on, current flows through the GAUGE fuse to TERMINAL 2 of the HTR relay to the coil side to TERMINAL 1 to TERMINAL 3 of the blower SW.

* Low speed operation
  When the blower SW is moved to LO position, current flows to TERMINAL 3 of the blower SW to TERMINAL 1 to GROUND, causing the HTR relay to switch on. This causes the current to flow from the HTR fuse to TERMINAL 5 of the HTR relay to TERMINAL 3 to TERMINAL 1 of the blower motor to TERMINAL 2 to TERMINAL 4 of the blower resistor to TERMINAL 1 to GROUND, causing the blower motor to rotate at low speed.

* Medium speed operation (Operation at M1, M2)
  When the blower SW is moved to M1 position, current flows to TERMINAL 3 of the blower SW to TERMINAL 1 to GROUND, turning the HTR relay to switch on. This causes the current to flow from the HTR fuse to TERMINAL 5 of the HTR relay to TERMINAL 3 to TERMINAL 1 of the blower motor to TERMINAL 2 to TERMINAL 4 of the blower resistor to TERMINAL 3 to TERMINAL 4 of the blower SW to TERMINAL 1 to GROUND. At this time, the blower resistance of the blower resistor is less than at low speed, so the blower motor rotates at medium low speed.
  When the blower SW is moved to M2 position, current flows through the motor flows from TERMINAL 4 of the blower resistor to TERMINAL 2 to TERMINAL 8 of the blower SW to TERMINAL 1 to GROUND. At this time, resistance of the blower resistor is less than at M1 position, so the blower motor rotates at medium high speed.

* High speed operation
  When the blower SW is moved to HIGH position, current flows to TERMINAL 3 of the blower SW to TERMINAL 1 to GROUND, turning the HTR relay to switch on.
  This causes the current to flow from the HTR fuse to TERMINAL 5 of the HTR relay to TERMINAL 3 to TERMINAL 1 of the blower motor to TERMINAL 2 to TERMINAL 5 of the blower SW to TERMINAL 1 to GROUND, causing the blower motor to rotate at high speed.

2. OPERATION OF AIR INLET CONTROL SERVO MOTOR

* Switching from FRESH to RECIRC
  With the ignition SW turned on, current flows from the GAUGE fuse to TERMINAL 5 of the air inlet control servo motor. When the RECIRC/FRESH SW is switched to the RECIRC side, current flows from TERMINAL 5 of the air inlet control servo motor to TERMINAL 1 to TERMINAL (A) 13 of the integration control and panel to TERMINAL (B) 1 to GROUND. The motor rotates and the damper moves to the RECIRC side. When it is in the RECIRC position, current is cut inside the servo motor and the damper stops at that position.

* Switching from RECIRC to FRESH
  With the ignition SW turned on, when the RECIRC/FRESH SW is switched to the FRESH side, current flows from TERMINAL 5 of the air inlet control servo motor to TERMINAL 2 to TERMINAL (A) 15 of the integration control and panel to TERMINAL (B) 1 to GROUND, the motor rotates and the damper moves to the FRESH side. when it is in the FRESH position, current is cut inside the servo motor and the damper stops at that position. When the ignition SW turned on, and mode SW (Integration control and panel) is at DEF or F/DEF position, it causes the damper to move to the FRESH side. Whether the RECIRC/FRESH SW (Integration control and panel) is on or not.

3. AIR CONDITIONING OPERATION

When the blower SW is on, current flows from the GAUGE fuse to the HEATER relay (Coil side) to TERMINAL 3 of the blower SW to TERMINAL 1 to GROUND, activating the HTR relay. This causes current to flow from the HTR fuse to the HTR relay (Point side) to A/C fuse to TERMINAL (B) 12 of the A/C SW (Integration control and panel). When the A/C SW (Integration Control and panel) is turned on. Current flows from the A/C fuse to TERMINAL (B) 12 of the integration control and panel to TERMINAL (A) 8 to A/C magnetic clutch. Causing The compressor to operate.
When blower SW is on and mode SW (Integration control and panel) is at DEF or F/DEF position, it causes A/C to run whether A/C SW (Integration control and panel) is on or not.

SERVICE HINTS

HTR RELAY

5–3 : Closed with ignition SW on and heater blower SW on

A1 A/C DUAL PRESSURE SW

1–2 : Open with refrigerant pressure at less than approx. **2.0** kgf/cm^2 (**196.1** kpa, **28.4** psi) or more than approx. **32.0** kgf/cm^2 (**3138.1** kpa, **455** psi)

I24 (A), I25 (B) INTEGRATION CONTROL AND PANEL

(B) 4–GROUND : Approx. **12** volts with ignition SW at **ON** or **ST** position
(B)12–GROUND : Approx. **12** volts with ignition SW on and blower SW on
(B) 1–GROUND : Always continuity

: PARTS LOCATION

Code	See Page	Code	See Page	Code	See Page
A1	30 (2UZ–FE)	B6	34	J1	33 (5VZ–FE)
	32 (5VZ–FE)	E3 A	34	J3	35
A2 B	32 (5VZ–FE)	E4 B	34	J8	35
A3 A	30 (2UZ–FE)	E5 C	34	J13	35
A13	34	E7 E	34	J18	31 (2UZ–FE)
A15	34	I24 A	35		33 (5VZ–FE)
B4	34	I25 B	35		
B5	34	J1	31 (2UZ–FE)		

: RELAY BLOCKS

Code	See Page	Relay Blocks (Relay Block Location)
2	21	Engine Room R/B (Engine Compartment Left)

: JUNCTION BLOCK AND WIRE HARNESS CONNECTOR

Code	See Page	Junction Block and Wire Harness (Connector Location)
1E	22 (*2)	Engine Room Main Wire and Driver Side J/B (Lower Finish Panel)
	26 (*1)	
1F	22 (*2)	Cowl Wire and Driver Side J/B (Lower Finish Panel)
	26 (*1)	

: CONNECTOR JOINING WIRE HARNESS AND WIRE HARNESS

Code	See Page	Joining Wire Harness and Wire Harness (Connector Location)
IA4	44	Engine Room Main Wire and Cowl Wire (Left Kick Panel)
IA5		
IE1	46	Engine Wire and Cowl Wire (Right Side of Instrument Panel)
IE2		
IE3		

: GROUND POINTS

Code	See Page	Ground Points Location
EA	40 (2UZ–FE)	Front Left Fender
	42 (5VZ–FE)	
IF	44	Left Kick Panel
II	44	Right Kick Panel

: SPLICE POINTS

Code	See Page	Wire Harness with Splice Points	Code	See Page	Wire Harness with Splice Points
E1	40 (2UZ–FE)	Engine Room Main Wire	I4	46	Cowl Wire
	42 (5VZ–FE)		I16		

* 1 : w/ Daytime Running Light * 2 : w/o Daytime Running Light * 3 : Bench Seat * 4 : Separate Seat, Captain Seat (w/o Power Seat)

I GROUND POINT

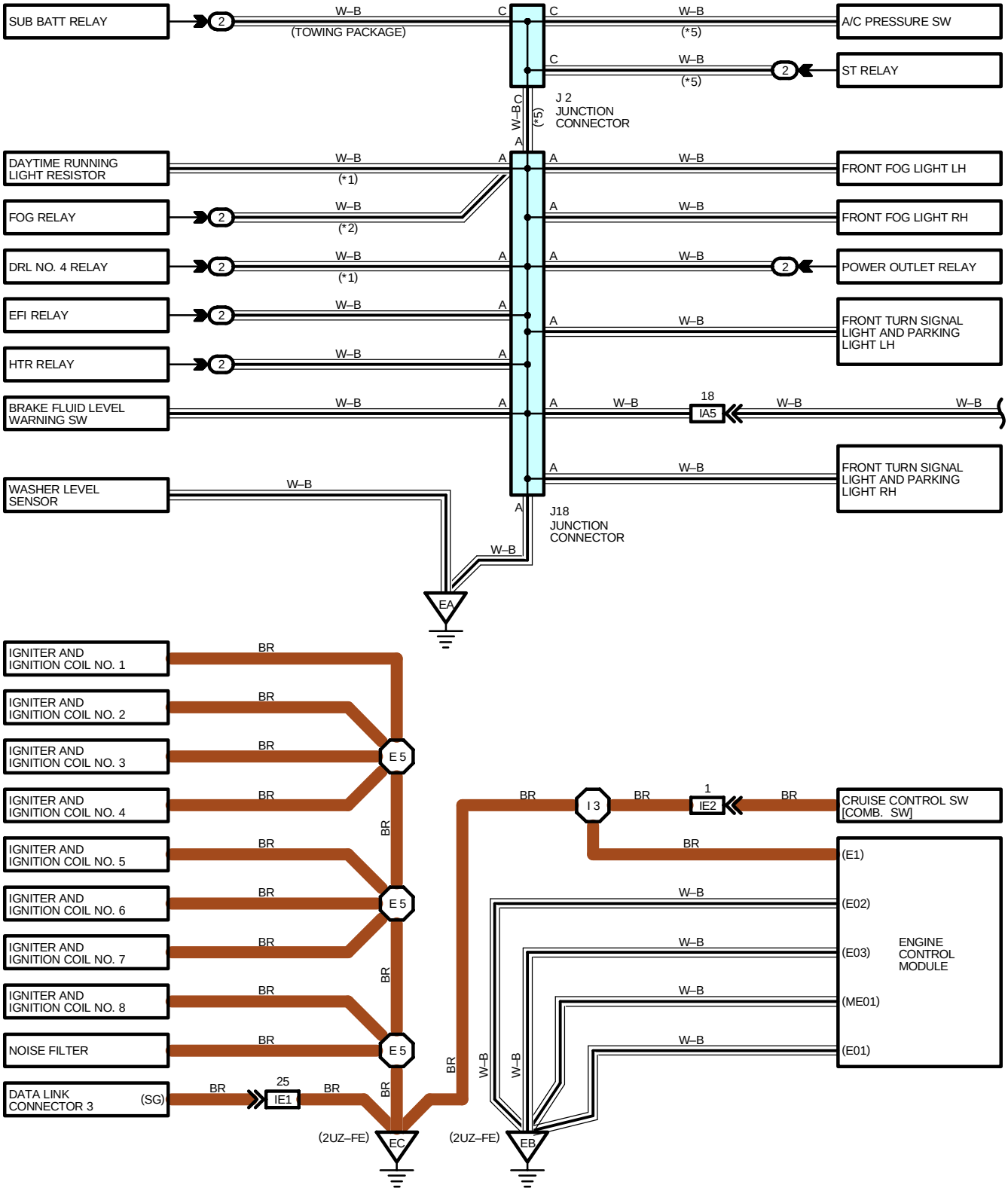

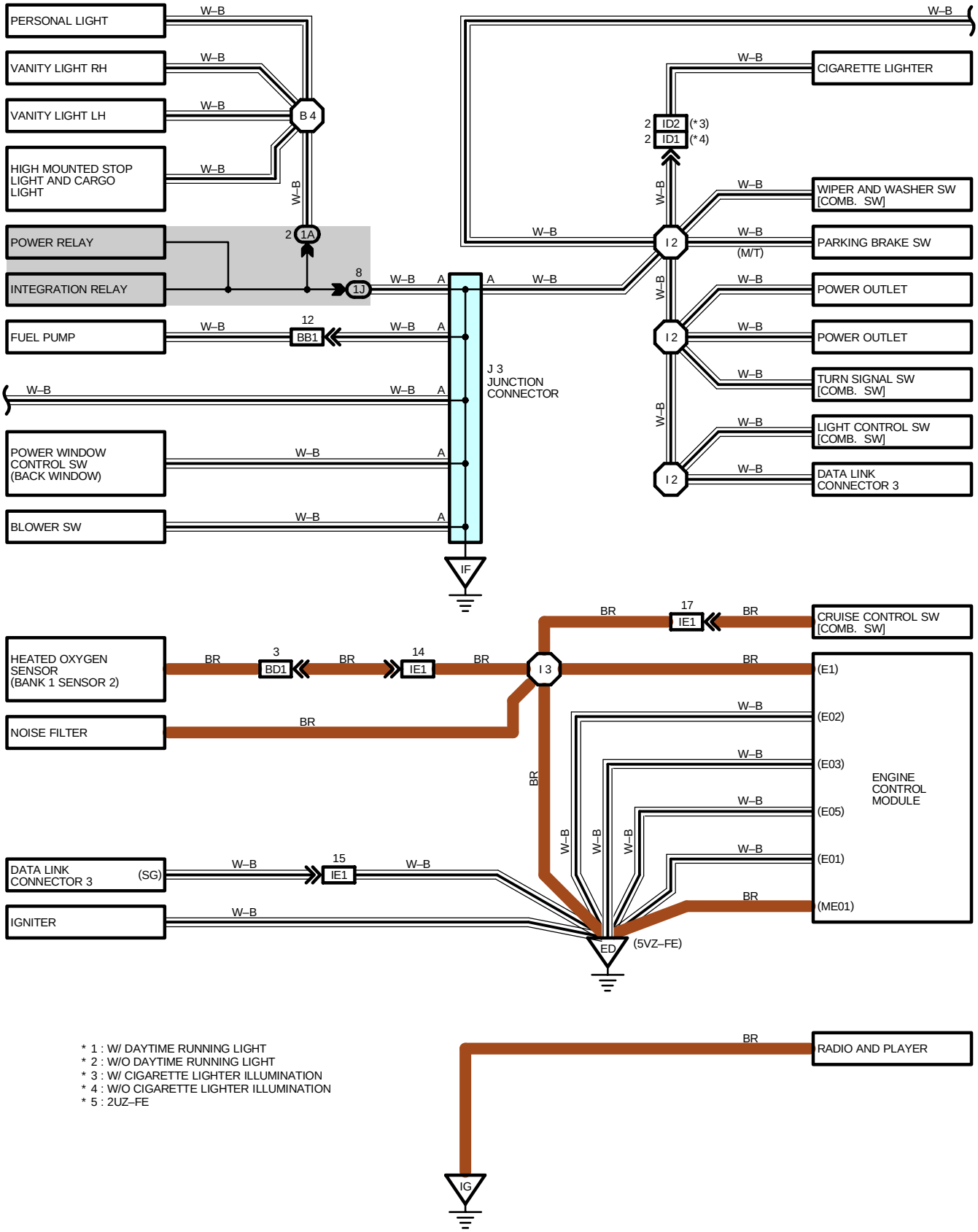

* 1 : W/ DAYTIME RUNNING LIGHT
* 2 : W/O DAYTIME RUNNING LIGHT
* 3 : W/ CIGARETTE LIGHTER ILLUMINATION
* 4 : W/O CIGARETTE LIGHTER ILLUMINATION
* 5 : 2UZ–FE

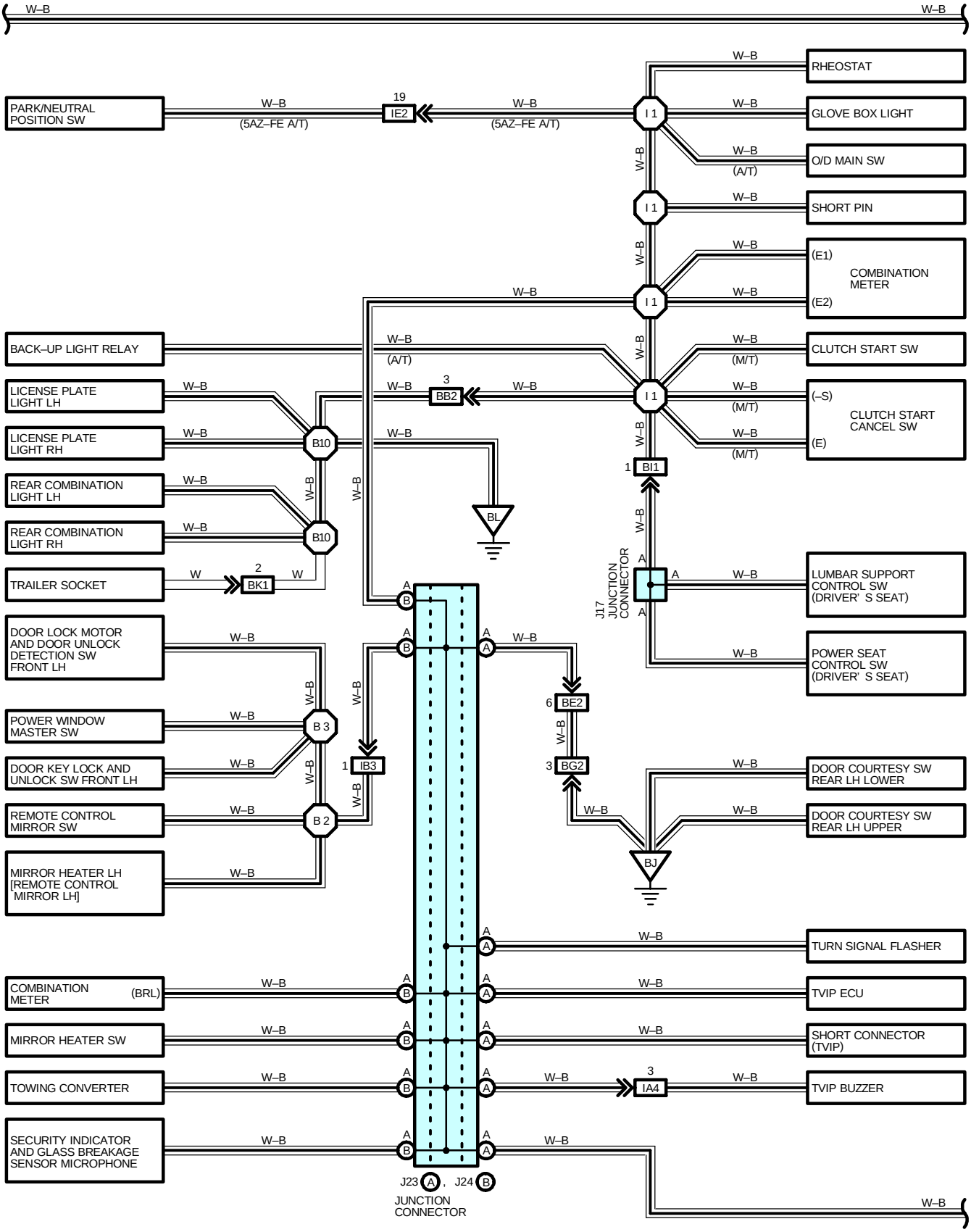
W–B
W–B
RHEOSTAT
PARK/NEUTRAL POSITION SW
19
IE2
(5AZ–FE A/T)
(5AZ–FE A/T)
I 1
GLOVE BOX LIGHT
O/D MAIN SW
(A/T)
SHORT PIN
(E1)
COMBINATION METER
(E2)
BACK–UP LIGHT RELAY
(A/T)
CLUTCH START SW
(M/T)
LICENSE PLATE LIGHT LH
LICENSE PLATE LIGHT RH
3
BB2
(–S)
CLUTCH START CANCEL SW
(E)
B10
REAR COMBINATION LIGHT LH
REAR COMBINATION LIGHT RH
BL
1
BI1
TRAILER SOCKET
2
BK1
J17 JUNCTION CONNECTOR
LUMBAR SUPPORT CONTROL SW (DRIVER' S SEAT)
DOOR LOCK MOTOR AND DOOR UNLOCK DETECTION SW FRONT LH
POWER SEAT CONTROL SW (DRIVER' S SEAT)
6
BE2
POWER WINDOW MASTER SW
B 3
DOOR KEY LOCK AND UNLOCK SW FRONT LH
1
IB3
3
BG2
DOOR COURTESY SW REAR LH LOWER
REMOTE CONTROL MIRROR SW
B 2
DOOR COURTESY SW REAR LH UPPER
BJ
MIRROR HEATER LH [REMOTE CONTROL MIRROR LH]
TURN SIGNAL FLASHER
COMBINATION METER
(BRL)
TVIP ECU
MIRROR HEATER SW
SHORT CONNECTOR (TVIP)
TOWING CONVERTER
IA4
TVIP BUZZER
SECURITY INDICATOR AND GLASS BREAKAGE SENSOR MICROPHONE
J23 A , J24 B
JUNCTION CONNECTOR

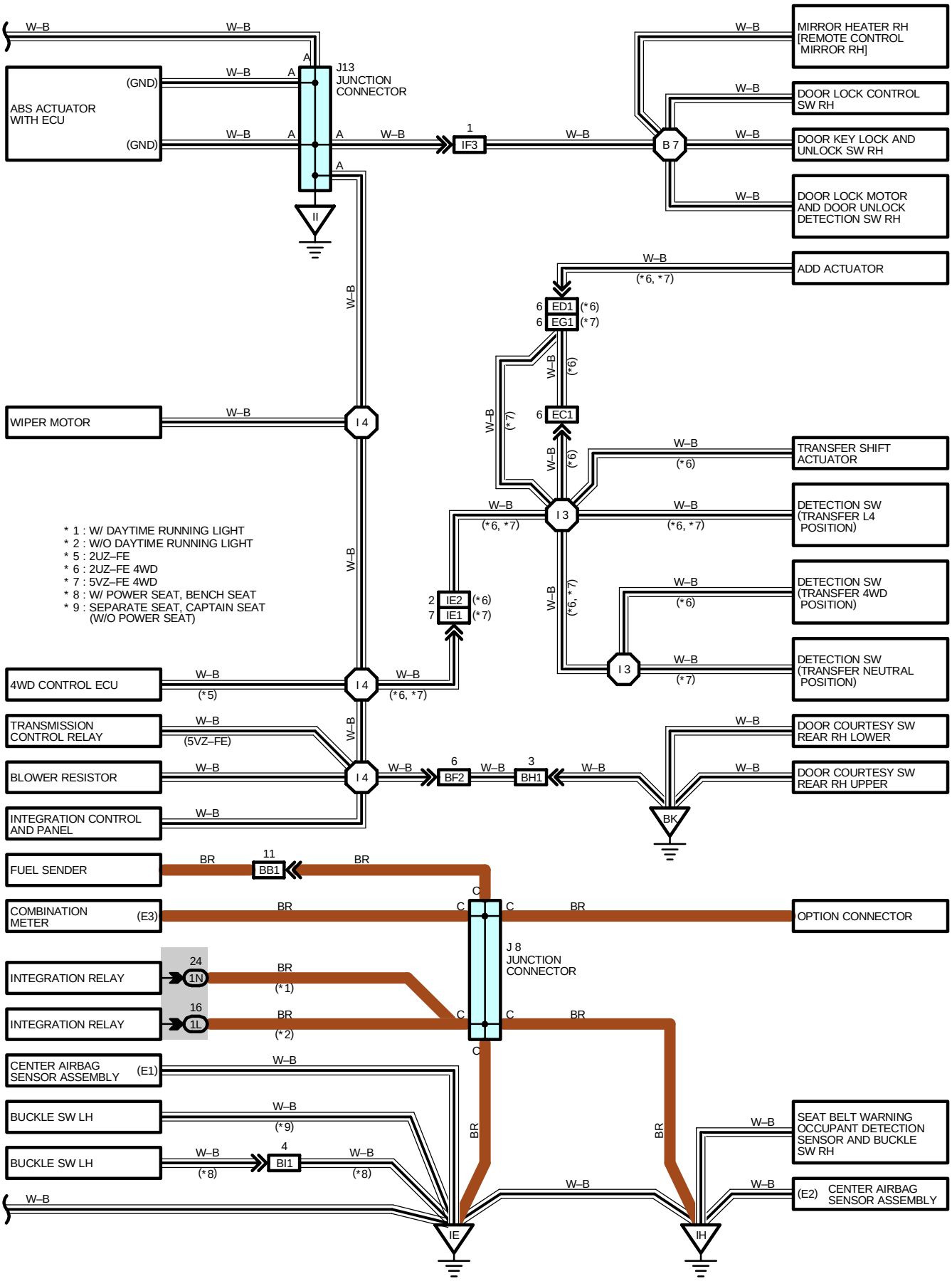
W–B
ABS ACTUATOR WITH ECU
(GND)
J13 JUNCTION CONNECTOR
IF3
B 7
MIRROR HEATER RH [REMOTE CONTROL MIRROR RH]
DOOR LOCK CONTROL SW RH
DOOR KEY LOCK AND UNLOCK SW RH
DOOR LOCK MOTOR AND DOOR UNLOCK DETECTION SW RH
ADD ACTUATOR
(*6, *7)
ED1
EG1
EC1
(*6)
(*7)
WIPER MOTOR
I 4
I 3
TRANSFER SHIFT ACTUATOR
DETECTION SW (TRANSFER L4 POSITION)
DETECTION SW (TRANSFER 4WD POSITION)
DETECTION SW (TRANSFER NEUTRAL POSITION)
* 1 : W/ DAYTIME RUNNING LIGHT
* 2 : W/O DAYTIME RUNNING LIGHT
* 5 : 2UZ–FE
* 6 : 2UZ–FE 4WD
* 7 : 5VZ–FE 4WD
* 8 : W/ POWER SEAT, BENCH SEAT
* 9 : SEPARATE SEAT, CAPTAIN SEAT (W/O POWER SEAT)
IE2
IE1
4WD CONTROL ECU
(*5)
TRANSMISSION CONTROL RELAY
(5VZ–FE)
BLOWER RESISTOR
INTEGRATION CONTROL AND PANEL
BF2
BH1
BK
DOOR COURTESY SW REAR RH LOWER
DOOR COURTESY SW REAR RH UPPER
FUEL SENDER
BB1
BR
COMBINATION METER
(E3)
OPTION CONNECTOR
J 8 JUNCTION CONNECTOR
INTEGRATION RELAY
1N
1L
(*1)
(*2)
CENTER AIRBAG SENSOR ASSEMBLY
(E1)
BUCKLE SW LH
(*9)
(*8)
BI1
SEAT BELT WARNING OCCUPANT DETECTION SENSOR AND BUCKLE SW RH
(E2)
CENTER AIRBAG SENSOR ASSEMBLY
IE
IH

I GROUND POINT

: PARTS LOCATION

Code	See Page	Code	See Page	Code		See Page
J2	31 (2UZ–FE)	J13	35	J23	A	35
	33 (5VZ–FE)	J17	38	J24	B	35
J3	35	J18	31 (2UZ–FE)			
J8	35		33 (5VZ–FE)			

: RELAY BLOCKS

Code	See Page	Relay Blocks (Relay Block Location)
2	21	Engine Room R/B (Engine Compartment Left)

: JUNCTION BLOCK AND WIRE HARNESS CONNECTOR

Code	See Page	Junction Block and Wire Harness (Connector Location)
1A	22 (*2)	Roof Wire and Driver Side J/B (Lower Finish Panel)
	26 (*1)	
1J	22 (*2)	Cowl Wire and Driver Side J/B (Lower Finish Panel)
	26 (*1)	
1L	23 (*2)	
1N	27 (*1)	

: CONNECTOR JOINING WIRE HARNESS AND WIRE HARNESS

Code	See Page	Joining Wire Harness and Wire Harness (Connector Location)
EC1	40 (2UZ–FE)	Engine No.2 Wire and Engine Wire (Near the Starter)
ED1	40 (2UZ–FE)	Engine No.2 Wire and Differential Wire (Near the Transmission)
EG1	42 (5VZ–FE)	Engine Wire and Differential Wire (Front Differential Upper Side)
IA4	44	Engine Room Main Wire and Cowl Wire (Left Kick Panel)
IA5		
IB3	44	Front Door LH Wire and Cowl Wire (Left Kick Panel)
ID1	46	Cigarette Lighter Wire and Cowl Wire (Instrument Panel Brace LH)
ID2		
IE1	46	Engine Wire and Cowl Wire (Right Side of Instrument Panel)
IE2		
IF3	46	Front Door RH Wire and Cowl Wire (Right Kick Panel)
BB1	48 (Access Cab)	Frame Wire and Cowl Wire (Under the Driver's Seat)
	50 (Standard Cab)	
BB2	48 (Access Cab)	
	50 (Standard Cab)	
BD1	48 (Access Cab)	Frame Wire and Cowl Wire (Under the Front Passenger's Seat)
	50 (Standard Cab)	
BE2	48 (Access Cab)	Floor No.2 Wire and Cowl Wire (Center of Left Rocker Panel)
BF2	48 (Access Cab)	Floor No.1 Wire and Cowl Wire (Center of Right Rocker Panel)
BG2	48 (Access Cab)	Floor No.2 Wire and Rear Door No.1 Wire LH (Under the Left Quarter Panel)
BH1	48 (Access Cab)	Floor No.1 Wire and Rear Door No.1 Wire RH (Under the Right Quarter Panel)
BI1	52	Cowl Wire and Seat No.1 Wire (Under the Driver's Seat)
BK1	48 (Access Cab)	Frame Wire and Frame No.3 Wire (Near the License Plate Light)
	50 (Standard Cab)	

* 1 : w/ Daytime Running Light * 2 : w/o Daytime Running Light * 3 : Bench Seat * 4 : Separate Seat, Captain Seat (w/o Power Seat)

: GROUND POINTS

Code	See Page	Ground Points Location
EA	40 (2UZ–FE) 42 (5VZ–FE)	Front Left Fender
EB	40 (2UZ–FE)	Rear Bank of Right Cylinder Head
EC	40 (2UZ–FE)	Rear Bank of Left Cylinder Head
ED	42 (5VZ–FE)	Intake Manifold Left
IE IF	44	Left Kick Panel
IG	44	Instrument Panel Brace RH
IH II	44	Right Kick Panel
BJ	48 (Access Cab)	Inside of Rear Door LH
BK	48 (Access Cab)	Inside of Rear Door RH
BL	48 (Access Cab) 50 (Standard Cab)	Surrounding of the Front of the Fuel Tank

: SPLICE POINTS

Code	See Page	Wire Harness with Splice Points	Code	See Page	Wire Harness with Splice Points
E5	40 (2UZ–FE)	Engine Wire	B3	50 (Standard Cab)	Front Door LH Wire
I1 I2	46	Cowl Wire	B4	48 (Access Cab) 50 (Standard Cab)	Roof Wire
I3	46	Engine Wire	B7	48 (Access Cab) 50 (Standard Cab)	Front Door RH Wire
I4	46	Cowl Wire			
B2	48 (Access Cab) 50 (Standard Cab)	Front Door LH Wire	B10	48 (Access Cab) 50 (Standard Cab)	Frame Wire
B3	48 (Access Cab)				

J POWER SOURCE (Current Flow Chart)

The chart below shows the route by which current flows from the battery to each electrical source (Fusible Link, Circuit Breaker, Fuse, etc.) and other parts.

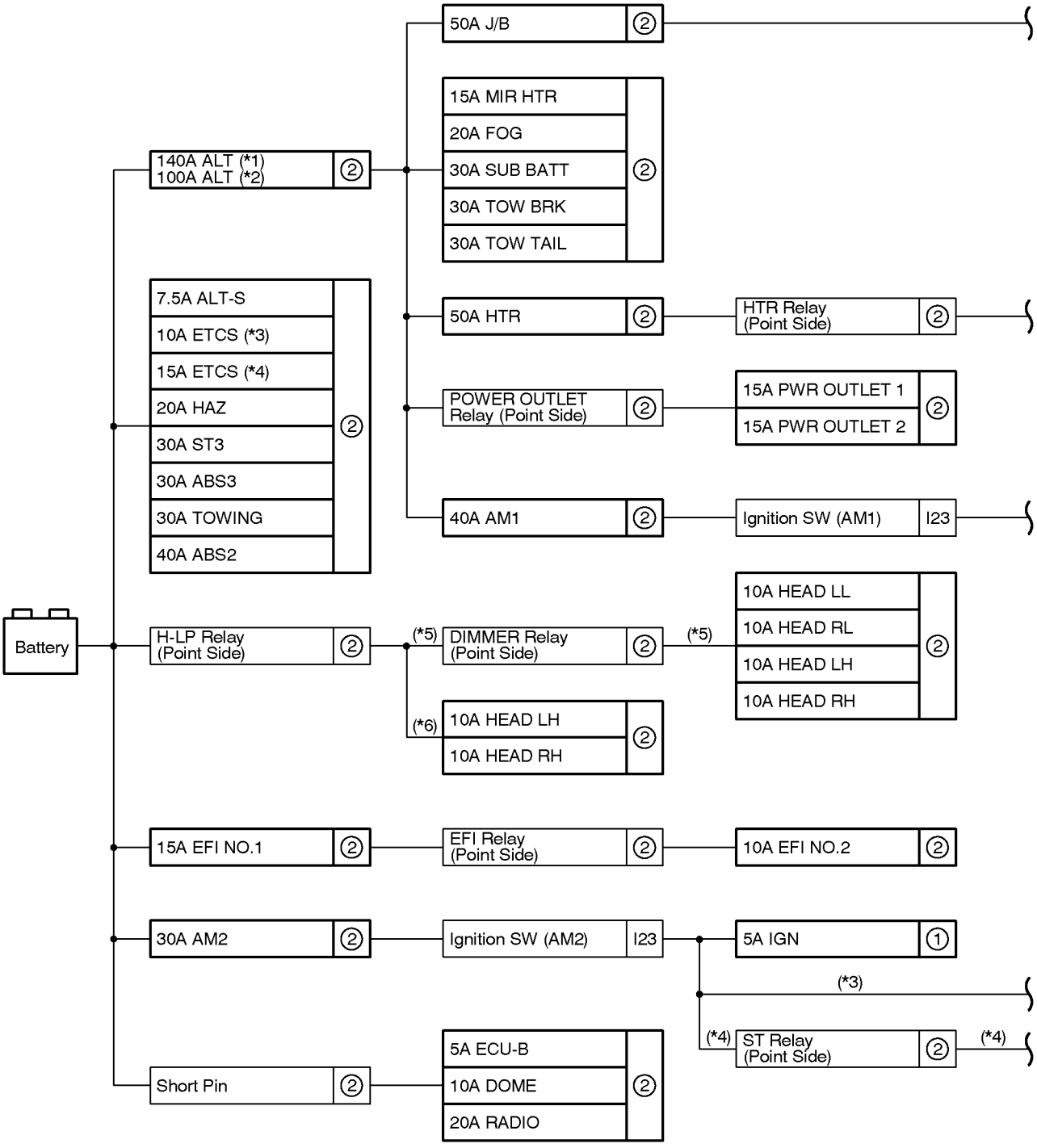

[LOCATION] ① : Driver Side J/B and Integration Relay (See page 22 (*6), 26 (*5))

② : Engine Room R/B (See page 21)

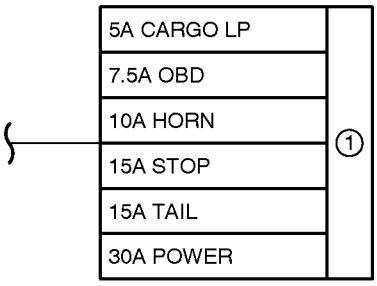

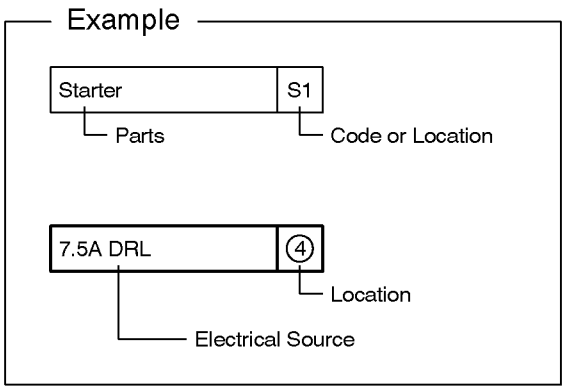

* 1:Towing Package
* 2:Except Towing Package
* 3:2UZ-FE
* 4:5VZ-FE
* 5:w/ Daytime Running Light
* 6:w/o Daytime Running Light

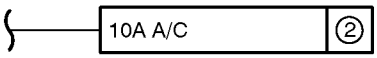

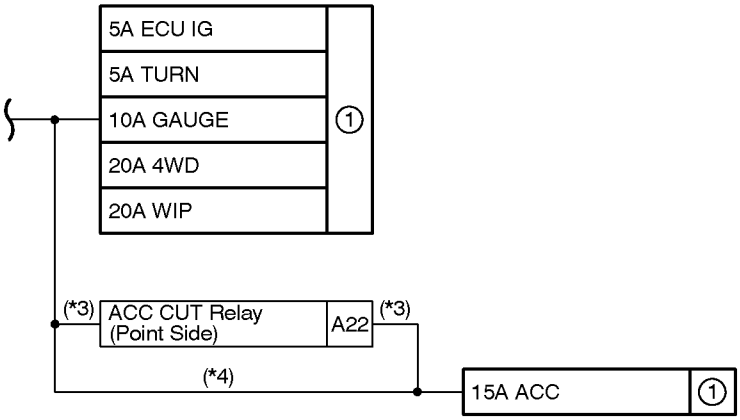

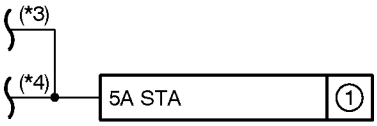

J POWER SOURCE (Current Flow Chart)

Driver Side J/B (See Page 22 (w/o Daytime Running Light),

See Page 26 (w/ Daytime Running Light))

Fuse		System	Page
5A	CARGO LP	Cargo Light	136
		Integration Control and Panel	138
5A	ECU IG	ABS	156
		Headlight (w/ Daytime Running Light)	98
		Light Auto Turn Off (w/ Daytime Running Light)	124
		Light Auto Turn Off (w/o Daytime Running Light)	128
		Power Window	204
		TVIP and Wireless Door Lock Control	196
5A	IGN	Charging	74
		Combination Mater	234
		Cruise Control (2UZ–FE)	160
		Cruise Control (5VZ–FE)	164
		Electronically Controlled Transmission and A/T Indicator (2UZ–FE)	144
		Electronically Controlled Transmission and A/T Indicator (5VZ–FE)	150
		Engine Control (2UZ–FE)	76
		Engine Control (5VZ–FE)	88
		SRS	169
5A	STA	Electronically Controlled Transmission and A/T Indicator (2UZ–FE)	144
		Electronically Controlled Transmission and A/T Indicator (5VZ–FE)	150
		Engine Control (2UZ–FE)	76
		Engine Control (5VZ–FE)	88
		Starting (2UZ–FE)	64
		Starting (5VZ–FE)	60
5A	TURN	Trailer Towing	132
		Turn Signal and Hazard Warning Light	120
7.5A	OBD	Engine Control (2UZ–FE)	76
		Engine Control (5VZ–FE)	88
10A	GAUGE	ABS	156
		Air Conditioning	240
		Back–Up Light	108
		Cargo Light	136
		Charging	74
		Combination Mater	234
		Cruise Control (2UZ–FE)	160
		Cruise Control (5VZ–FE)	164
		Door Lock Control (w/ Daytime Running Light)	184
		Door Lock Control (w/o Daytime Running Light)	190
		Electronically Controlled Transmission and A/T Indicator (2UZ–FE)	144
		Electronically Controlled Transmission and A/T Indicator (5VZ–FE)	150
		Engine Control (2UZ–FE)	76
		Engine Control (5VZ–FE)	88

∗ These are the page numbers of the first page on which the related system is shown.

Fuse		System	Page
10A	GAUGE	Integration Control and Panel	138
		Interior Light	116
		Key Reminder and Seat Belt Warning	210
		Mirror Heater	226
		Starting (5VZ–FE)	60
		Trailer Towing	132
		Wiper and Washer (w/ Int Time SW Mechanism)	220
		Wiper and Washer (w/o Int Time SW Mechanism)	224
		4WD (2UZ–FE)	174
		4WD (5VZ–FE)	180
10A	HORN	Horn	218
		TVIP and Wireless Door Lock Control	196
15A	ACC	Back–Up Light	108
		Cigarette Lighter and Power Outlet	214
		Clock	216
		Cruise Control (2UZ–FE)	160
		Cruise Control (5VZ–FE)	164
		Electronically Controlled Transmission and A/T Indicator (2UZ–FE)	144
		Electronically Controlled Transmission and A/T Indicator (5VZ–FE)	150
		Integration Control and Panel	138
		Radio and Player	232
		Remote Control Mirror	228
		SRS	169
		Trailer Towing	132
		4WD (2UZ–FE)	174
		4WD (5VZ–FE)	180
15A	STOP	ABS	156
		Cruise Control (2UZ–FE)	160
		Cruise Control (5VZ–FE)	164
		Electronically Controlled Transmission and A/T Indicator (2UZ–FE)	144
		Electronically Controlled Transmission and A/T Indicator (5VZ–FE)	150
		Engine Control (2UZ–FE)	76
		Engine Control (5VZ–FE)	88
		Stop Light	122
		Trailer Towing	132
15A	TAIL	Clock	216
		Engine Control (2UZ–FE)	76
		Headlight (w/ Daytime Running Light)	98
		Illumination	112
		Integration Control and Panel	138
		Light Auto Turn Off (w/ Daytime Running Light)	124
		Light Auto Turn Off (w/o Daytime Running Light)	128
		Taillight	110

* These are the page numbers of the first page on which the related system is shown.

J POWER SOURCE (Current Flow Chart)

Fuse		System	Page
15A	TAIL	Trailer Towing	132
		TVIP and Wireless Door Lock Control	196
20A	WIP	Wiper and Washer (w/ Int Time SW Mechanism)	220
		Wiper and Washer (w/o Int Time SW Mechanism)	224
20A	4WD	4WD (2UZ–FE)	174
		4WD (5VZ–FE)	180
30A	POWER	Door Lock Control (w/ Daytime Running Light)	184
		Door Lock Control (w/o Daytime Running Light)	190
		Light Auto Turn Off (w/ Daytime Running Light)	124
		Light Auto Turn Off (w/o Daytime Running Light)	128
		Power Seat	230
		Power Window	204
		TVIP and Wireless Door Lock Control	196

Engine Room R/B (See Page 21)

Fuse		System	Page
5A	ECU–B	Engine Control (2UZ–FE)	76
		TVIP and Wireless Door Lock Control	196
7.5A	ALT–S	Charging	74
10A	A/C	Air Conditioning	240
		Integration Control and Panel	138
10A	DOME	Clock	216
		Combination Mater	234
		Door Lock Control (w/ Daytime Running Light)	184
		Door Lock Control (w/o Daytime Running Light)	190
		Integration Control and Panel	138
		Interior Light	116
		Key Reminder and Seat Belt Warning	210
		SRS	169
		TVIP and Wireless Door Lock Control	196
10A	EFI NO.2	Engine Control (2UZ–FE)	76
		Engine Control (5VZ–FE)	88
10A	ETCS (2UZ–FE)	Cruise Control (2UZ–FE)	160
		Engine Control (2UZ–FE)	76
10A	HEAD LH	Fog Light (w/o Daytime Running Light)	106
		Headlight (w/ Daytime Running Light)	98
		Headlight (w/o Daytime Running Light)	102
10A	HEAD LL	Fog Light (w/ Daytime Running Light)	104
		Headlight (w/ Daytime Running Light)	98
10A	HEAD RH	Fog Light (w/o Daytime Running Light)	106
		Headlight (w/ Daytime Running Light)	98
		Headlight (w/o Daytime Running Light)	102
10A	HEAD RL	Headlight (w/ Daytime Running Light)	98

∗ These are the page numbers of the first page on which the related system is shown.

Fuse		System	Page
15A	EFI NO.1	Cruise Control (2UZ–FE)	160
		Cruise Control (5VZ–FE)	164
		Electronically Controlled Transmission and A/T Indicator (2UZ–FE)	144
		Electronically Controlled Transmission and A/T Indicator (5VZ–FE)	150
		Engine Control (2UZ–FE)	76
		Engine Control (5VZ–FE)	88
15A	ETCS (5VZ–FE)	Cruise Control (5VZ–FE)	164
15A	MIR HTR	Mirror Heater	226
15A	PWR OUTLET1	Cigarette Lighter and Power Outlet	214
15A	PWR OUTLET2	Cigarette Lighter and Power Outlet	214
20A	FOG	Fog Light (w/ Daytime Running Light)	104
		Fog Light (w/o Daytime Running Light)	106
20A	HAZ	Trailer Towing	132
		Turn Signal and Hazard Warning Light	120
20A	RADIO	Radio and Player	232
30A	AM2	Engine Control (2UZ–FE)	76
		Engine Control (5VZ–FE)	88
		Ignition (2UZ–FE)	68
		Ignition (5VZ–FE)	72
		Starting (2UZ–FE)	64
		Starting (5VZ–FE)	60
30A	ST3	Starting (2UZ–FE)	64
30A	SUB BATT	Trailer Towing	132
30A	TOW BRK	Trailer Towing	132
30A	TOW TAIL	Trailer Towing	132
30A	TOWING	Trailer Towing	132
40A	ABS2	ABS	156
40A	ABS3	ABS	156
40A	AM1	Cruise Control (5VZ–FE)	164
		Starting (5VZ–FE)	60
50A	HTR	Air Conditioning	240
50A	J/B	Illumination	112
		Taillight	110
100A	ALT (Except Towing Package)	Charging	74
		Cigarette Lighter and Power Outlet	214
		Cruise Control (5VZ–FE)	164
		Illumination	112
		Starting (5VZ–FE)	60
		Taillight	110
140A	ALT (Towing Package)	Charging	74
		Cigarette Lighter and Power Outlet	214
		Illumination	112
		Taillight	110

* These are the page numbers of the first page on which the related system is shown.

K CONNECTOR LIST

*1 : Separate Seat, Captain Seat (w/o Power Seat)

A 1
Gray

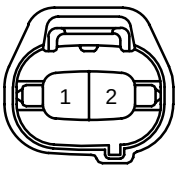

A 2
Gray



A 3
Gray



A 4
(2UZ–FE)

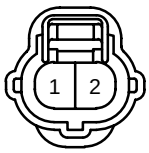

A 4
(5VZ–FE) Gray



A 5
Black

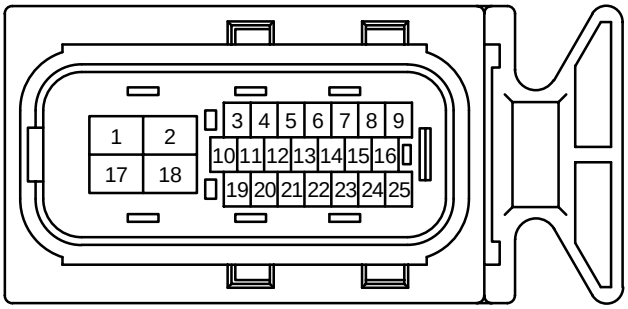

A 6
Gray



A 7
Gray



A 8
Black



A 9
Black

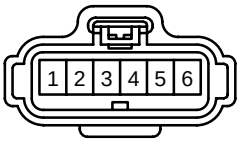

A10
Dark Gray



A11
Yellow



A12
Yellow



A13



A15
Black

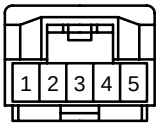

A16
Yellow

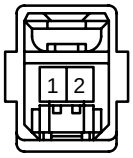

A17
Yellow

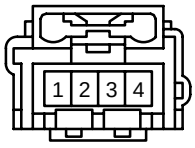

A18
Black



A19
Gray



A20
Black

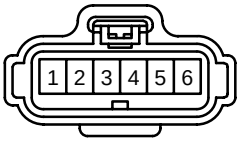

A22
Gray

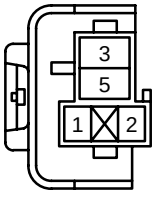

B 1
Gray



B 2
Gray



B 3

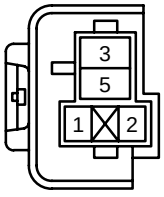

B 4

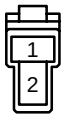

B 5
Black



B 6

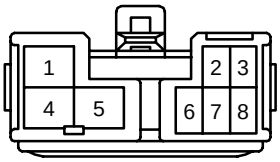

B 7
(Bench Seat)



B 7
(*1)

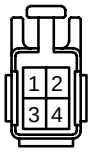

B 7
(w/ Power Seat)

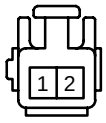

C 1
Gray



C 2
(2UZ–FE) Gray



C 2
(5VZ–FE) Black



C 4
Yellow

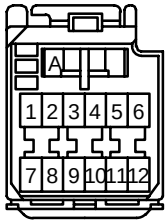

C 5
Yellow

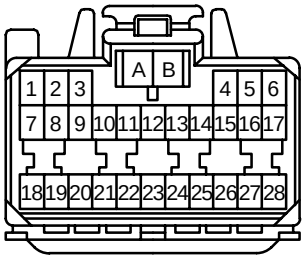

C 6
Yellow

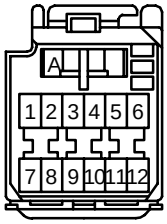

C 7



C 8
Gray

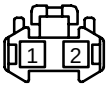

C 9
Black

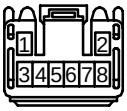

C10

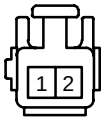

C11
Blue

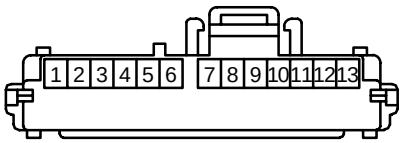

C12

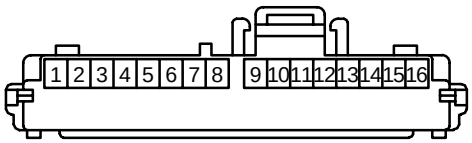

C13
Brown

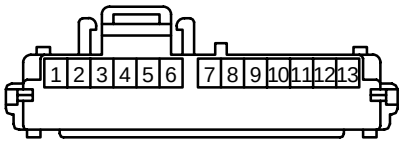

C14
Gray

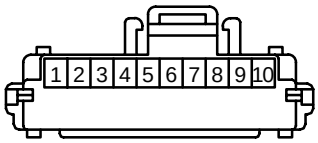

C15

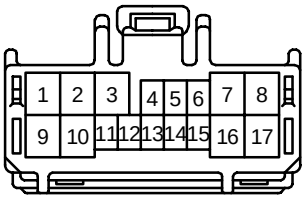

C16
Black

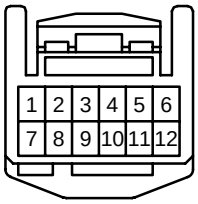

C17
Black

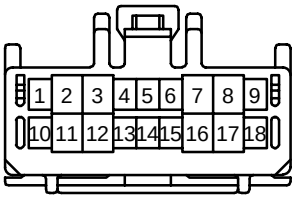

C18
Gray

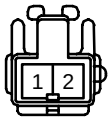

D 2
Gray

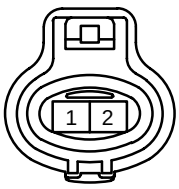

D 3
(2UZ–FE) Gray

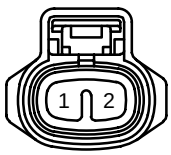

D 3
(5VZ–FE) Blue

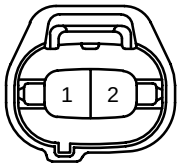

D 4
(2UZ–FE) Gray

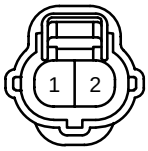

D 4
(5VZ–FE) Blue

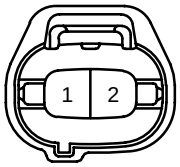

D 5
Gray

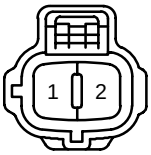

K CONNECTOR LIST

D 6

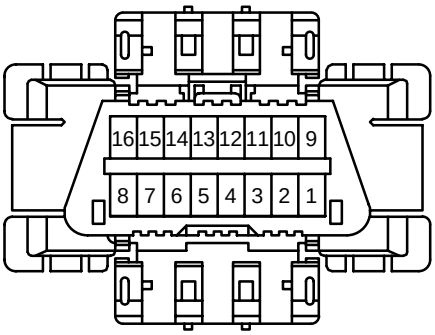

D 8
Orange

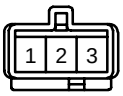

D 9



D10



D11
Black



D14



D15



D16



D17



D18
Gray



D19



D20
Gray



D21



D22
Gray

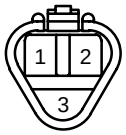

D23
Gray



D24

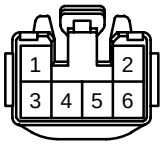

D25
Black



D26
Black



D27
Black



D28
Black



D29



D30
Black



E 1
(2UZ–FE) Gray



E 1
(5VZ–FE) Black



E 2
(2UZ–FE) Black



E 2
(5VZ–FE) Dark Gray



E 3
(2UZ–FE)

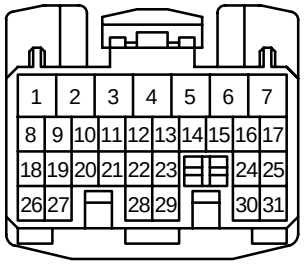

E 3
(5VZ–FE)

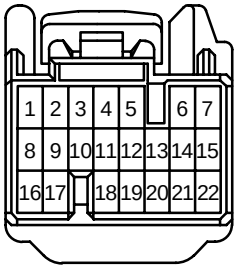

E 4
(2UZ–FE)

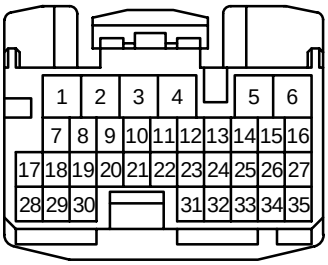

E 4
(5VZ–FE)

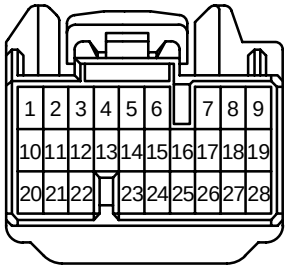

E 5
(2UZ–FE)

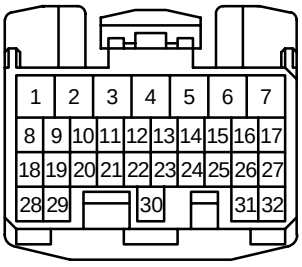

E 5
(5VZ–FE)

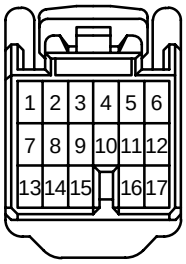

E 6
(2UZ–FE)

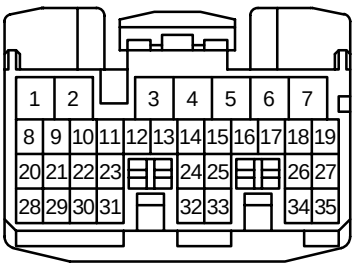

E 6
(5VZ–FE)

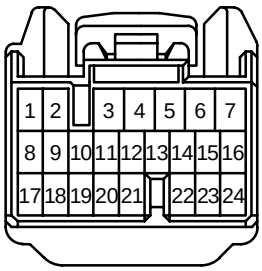

E 7
(2UZ–FE)

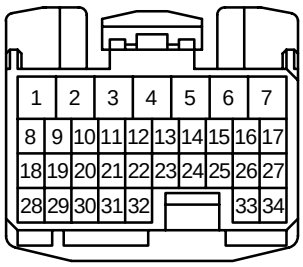

E 7
(5VZ–FE)

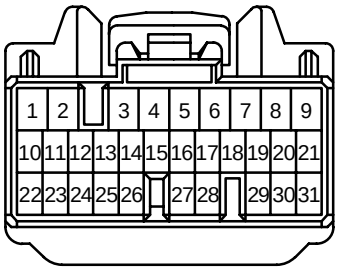

F 1
Brown



F 2
Brown



F 3
Gray



F 4
Gray



F 5
Dark Gray



F 7

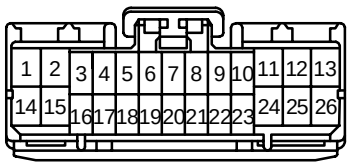

F 8



F 9



F10
Dark Gray



G 1
(2UZ–FE)



G 1
(5VZ–FE)

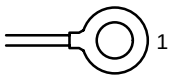

G 2
Black



G 3



H 1
Brown

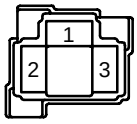

H 2
Brown

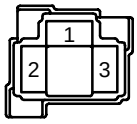

H 3
Dark Gray



H 4
Dark Gray



H 5
Dark Gray



H 6
Dark Gray



H 7
Black

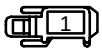

H 8
Black

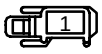

H 9
Dark Gray



H10

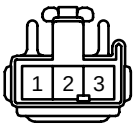

I 2
Black

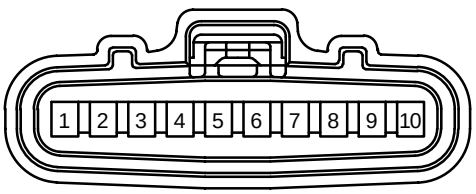

K CONNECTOR LIST

I 3
Black

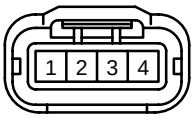

I 4
Black

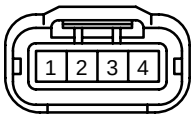

I 5
Black

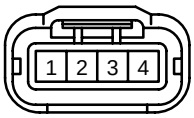

I 6
Black

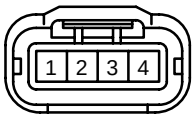

I 7
Black

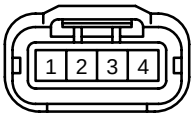

I 8
Black

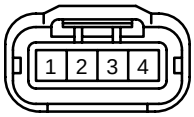

I 9
Black

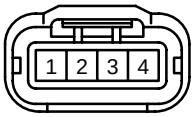

I10
Black

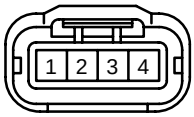

I11
Black

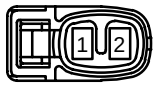

I12
Black

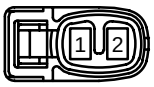

I13
Black

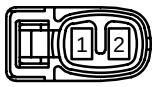

I14
(2UZ–FE) Blue



I14
(5VZ–FE) Brown



I15
(2UZ–FE) Blue



I15
(5VZ–FE) Brown



I16
(2UZ–FE) Blue



I16
(5VZ–FE) Brown



I17
(2UZ–FE) Blue



I17
(5VZ–FE) Brown



I18
(2UZ–FE) Blue



I18
(5VZ–FE) Brown



I19
(2UZ–FE) Blue



I19
(5VZ–FE) Brown



I20
Blue



I21
Blue



I22
Blue

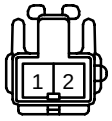

I23

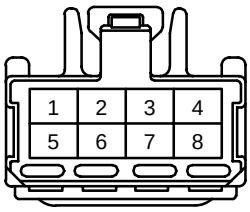

I24

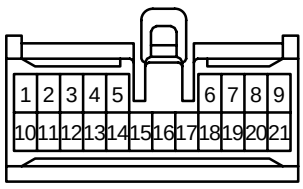

I25

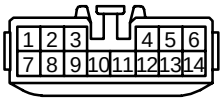

I26



J 1
Blue

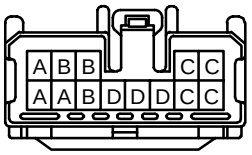

J 2
Blue

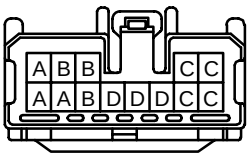

J 3

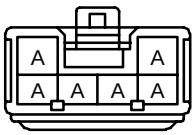

J 4

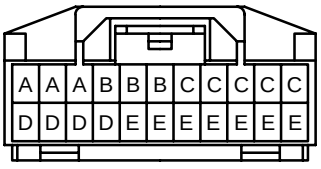

J 5

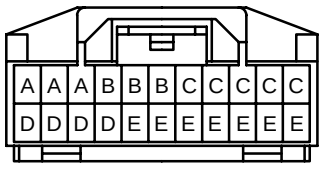

J 7

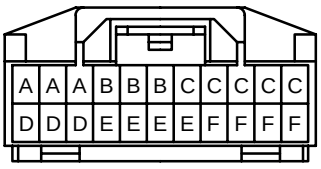

J 8

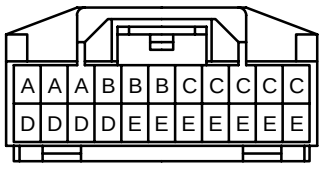

J 9

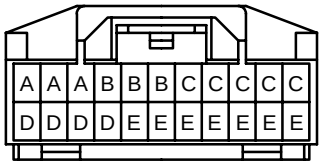

J10

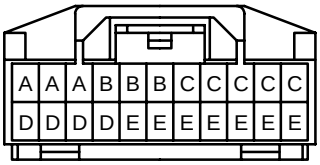

J11
Blue

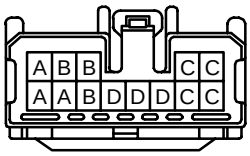

J12

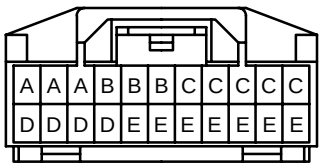

J13

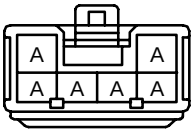

J14
Orange

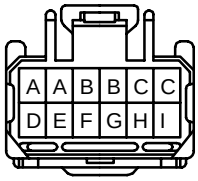

J15
Orange

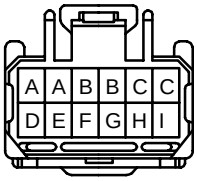

J16
Black



J17
Black



J18

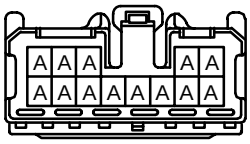

J19
Black



J20
Black



J21

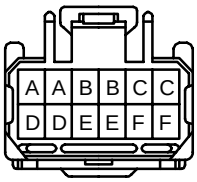

J22

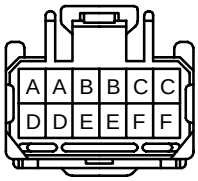

J23
Gray

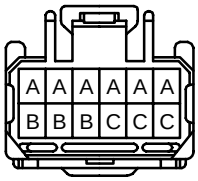

J24
Gray



K 1
(2UZ–FE)



K 1
(5VZ–FE) Black



K 2
(2UZ–FE) Dark Gray



K 2
(5VZ–FE) Black



L 1
Gray



L 2
Gray



L 3



M 1
Black

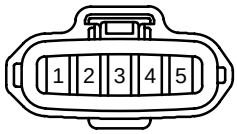

M 4
Black

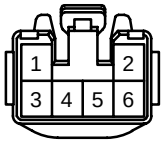

N 1
Gray



O 1
Black

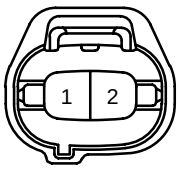

O 2
Gray



O 4



O 5

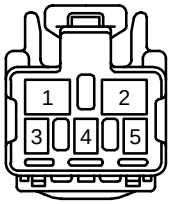

O 6
Gray



P 1
Gray

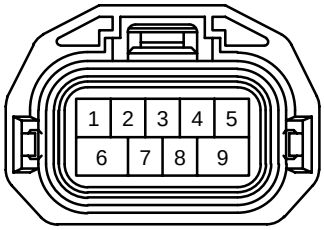

P 2
Black



P 3
Yellow

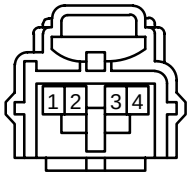

K CONNECTOR LIST

*2 : w/ Mirror Heater
*3 : w/o Mirror Heater

P 4
Gray

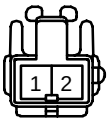

P 5
(A/T) Brown



P 5
(M/T)

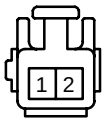

P 6



P 7



P 8



P 9

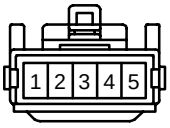

P10

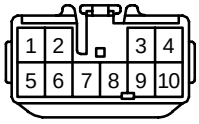

P11

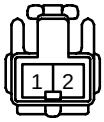

P12

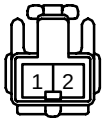

P13
Yellow

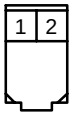

P14
Yellow

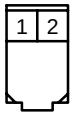

P15

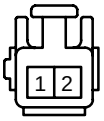

P16
Black

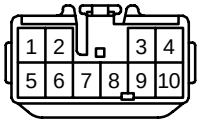

P17
Blue

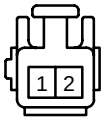

P18

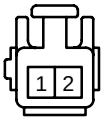

P19
Blue

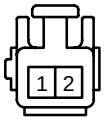

P20



P21



P22

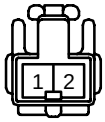

R 1

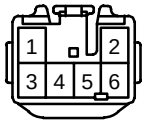

R 2

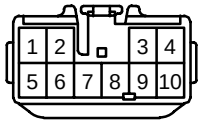

R 3

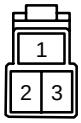

R 4
Gray



R 5
Gray



R 6



R 7



R 8
(*2)

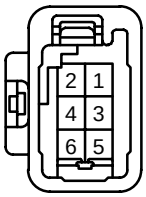

R 8
(*3)



R 9
(*2)

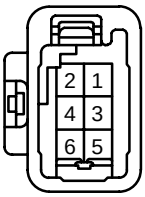

R 9
(*3)



R10

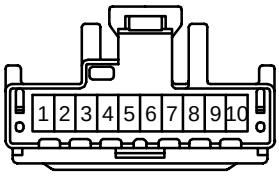

R11

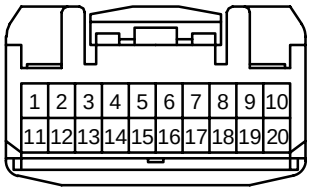

S 1
(2UZ–FE)

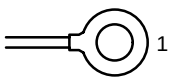

*4 : w/ Cruise Control
*5 : w/o Cruise Control
*6 : Except Towing Package

S 1
(2UZ–FE)

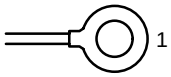

S 1
(5VZ–FE)

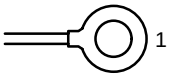

S 2
Black



S 3
Black



S 4
(*4) Blue

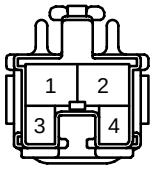

S 4
(*5) Brown

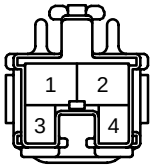

S 5



S 8



S 9

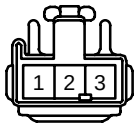

S10
Black

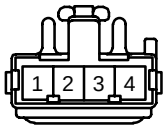

T 1
Gray



T 2
(2UZ–FE) Black

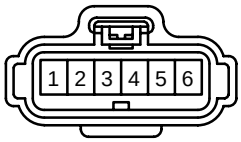

T 2
(5VZ–FE) Black



T 3
Black

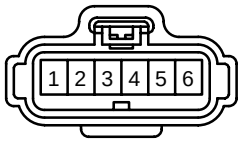

T 4

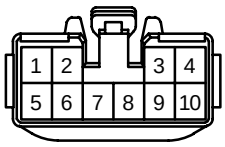

T 5

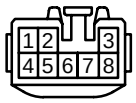

T 6
(*6) Black

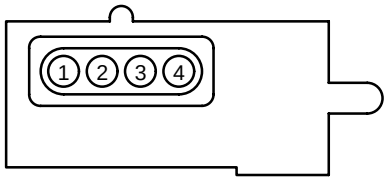

T 6
(Towing Package) Black

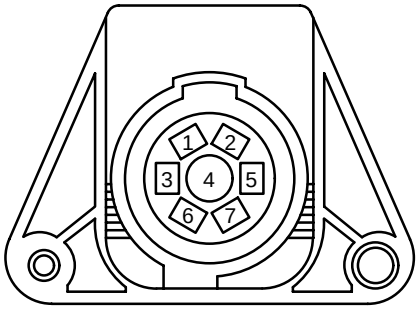

T 7

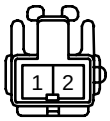

T 8

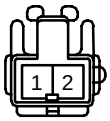

T 9

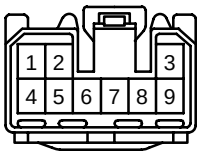

T10
Gray

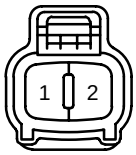

T11

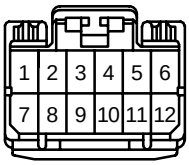

T12

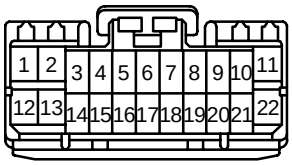

T13
Black



U 1

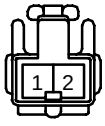

K CONNECTOR LIST

V 1
Black



V 2
Black



V 3
Black

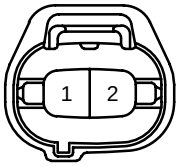

V 4
Black

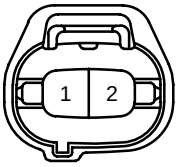

V 6
Blue

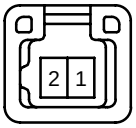

V 7
Blue

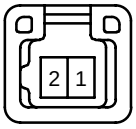

V 9
Blue



W 2
Dark Gray



W 3
(2UZ–FE) Gray



W 3
(5VZ–FE) Gray



W 4
Black

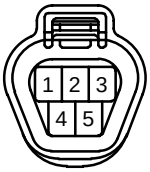

L PART NUMBER OF CONNECTORS

Code	Part Name	Part Number
A 1	A/C Dual Pressure SW	90980–11149
A 2	A/C Magnetic Clutch	90980–11271
A 3	A/C Magnetic Clutch and Lock Sensor	90980–11016
A 4	A/T Oil Temp. Sensor (2UZ–FE)	90980–11025
	A/T Oil Temp. Sensor (5VZ–FE)	90980–10498
A 5	ABS Actuator with ECU	90980–11861
A 6	ABS Speed Sensor Front LH	90980–11075
A 7	ABS Speed Sensor Front RH	
A 8	Accel Position Sensor	90980–11150
A 9	ADD Actuator	90980–11858
A10	Air Fuel Ratio Sensor (Bank 1 Sensor 1)	90980–11178
A11	Airbag Sensor Front LH	90980–11898
A12	Airbag Sensor Front RH	
A13	A/C Thermistor	90980–11918
A15	Air Inlet Control Servo Motor	90980–11909
A16	Airbag Squib (Front Passenger Airbag Assembly)	90980–11884
A17	Airbag Squib (Steering Wheel Pad)	90980–12160
A18	Ashtray Illumination	–
A19	ABS Speed Sensor Rear	90980–10942
A20	Accelerator Pedal Position Sensor	90980–11858
A22	ACC Cut Relay	82660–53010
B 1	Back–Up Light SW	90980–11250
B 2	Brake Fluid Level Warning SW	90980–11207
B 3	Back–UP Light Relay	82660–20340
B 4	Blower Motor	90980–10214
B 5	Blower Resistor	90980–10171
B 6	Blower SW and Defroster Mode SW	90980–10877
B 7	Buckle SW LH (Bench Seat)	90980–10824
	Buckle SW LH (Separate Seat, Captain Seat (w/o Power Seat))	90980–10795
	Buckle SW LH (w/ Power Seat)	90980–10825
C 1	Camshaft Position Sensor	90980–10947
C 2	Crankshaft Position Sensor (2UZ–FE)	90980–11162
	Crankshaft Position Sensor (5VZ–FE)	90980–10947
C 4	Center Airbag Sensor Assembly	90980–11873
C 5	Center Airbag Sensor Assembly	90980–11872
C 6	Center Airbag Sensor Assembly	90980–11871
C 7	Cigarette Lighter	90980–10760
C 8	Cigarette Lighter Illumination	90980–11148
C 9	Clutch Start Cancel SW	90980–11533
C10	Clutch Start SW	90980–10825
C11	Combination Meter	90980–11114
C12	Combination Meter	90980–11113
C13	Combination Meter	90980–11115
C14	Combination Meter	90980–11116
C15	Combination SW	90980–11672

Code	Part Name	Part Number
C16	Combination SW	90980–12183
C17	Combination SW	90980–11594
C18	Cruise Control Clutch SW	90980–10906
D 2	Daytime Running Light Resistor	90980–10928
D 3	Detection SW (Transfer 4WD Position) (2UZ–FE)	90980–11250
	Detection SW (Transfer 4WD Position) (5VZ–FE)	90980–11156
D 4	Detection SW (Transfer L4 Position) (2UZ–FE)	90980–11025
	Detection SW (Transfer L4 Position) (5VZ–FE)	90980–11156
D 5	Detection SW (Transfer Neutral Position)	90980–10923
D 6	Data Link Connector 3	90980–11665
D 8	Diode (A/T)	90980–11071
D 9	Diode (Door Courtesy)	90980–11608
D10	Diode (Idle–Up)	
D11	Diode (Power Window System)	90980–10962
D14	Door Courtesy Light LH	90980–11148
D15	Door Courtesy Light RH	
D16	Door Courtesy SW Front LH	90980–10871
D17	Door Courtesy SW Front RH	
D18	Door Courtesy SW Rear LH Lower	90980–11003
D19	Door Courtesy SW Rear LH Upper	
D20	Door Courtesy SW Rear RH Lower	
D21	Door Courtesy SW Rear RH Upper	
D22	Door Key Lock and Unlock SW LH	90980–11245
D23	Door Key Lock and Unlock SW RH	
D24	Door Lock Control SW RH	90980–10797
D25	Door Lock Motor and Door Unlock Detection SW LH	90980–11150
D26	Door Lock Motor and Door Unlock Detection SW RH	
D27	Diode (Step Light)	90980–10962
D28	Diode (Door Lock)	
D29	Diode (TVIP)	90980–11608
D30	Diode (Unlock Warning)	90980–10962
E 1	Electronically Controlled Transmission Solenoid	90980–10891
E 2	Engine Coolant Temp. Sensor (2UZ–FE)	90980–10736
	Engine Coolant Temp. Sensor (5VZ–FE)	90980–10737
E 3	Engine Control Module (2UZ–FE)	90980–12142
	Engine Control Module (5VZ–FE)	90980–11638
E 4	Engine Control Module (2UZ–FE)	90980–12146
	Engine Control Module (5VZ–FE)	90980–11637
E 5	Engine Control Module (2UZ–FE)	90980–12143
	Engine Control Module (5VZ–FE)	90980–11586

Note: Not all of the above part numbers of the connector are established for the supply.

Code	Part Name	Part Number
E 6	Engine Control Module (2UZ–FE)	90980–12145
	Engine Control Module (5VZ–FE)	90980–11476
E 7	Engine Control Module (2UZ–FE)	90980–12144
	Engine Control Module (5VZ–FE)	90980–11421
F 1	Front Fog Light LH	90980–11096
F 2	Front Fog Light RH	
F 3	Front Turn Signal Light and Parking Light LH	90980–11020
F 4	Front Turn Signal Light and Parking Light RH	
F 5	Fuel Pump Resistor	90980–10901
F 7	4WD Control ECU	90980–11423
F 8	Front Door Speaker LH	90980–10935
F 9	Front Door Speaker RH	
F10	Fuel Pump and Sender	90980–11077
G 1	Generator (2UZ–FE)	90980–09365
	Generator (5VZ–FE)	90980–09212
G 2	Generator	90980–11964
G 3	Glove Box Light	90980–11148
H 1	Headlight LH	90980–11314
H 2	Headlight RH	
H 3	Heated Oxygen Sensor (Bank 1 Sensor 1)	90980–10869
H 4	Heated Oxygen Sensor (Bank 1 Sensor 2)	90980–11028
H 5	Heated Oxygen Sensor (Bank 2 Sensor 1)	90980–10869
H 6	Heated Oxygen Sensor (Bank 2 Sensor 2)	90980–11028
H 7	Horn LH	90980–10619
H 8	Horn RH	
H 9	Heated Oxygen Sensor (Bank 1 Sensor 2)	90980–11028
H10	High Mounted Stop Light and Cargo Light	90980–11296
I 2	Igniter	90980–11653
I 3	Igniter and Ignition Coil No.1	90980–11885
I 4	Igniter and Ignition Coil No.2	
I 5	Igniter and Ignition Coil No.3	
I 6	Igniter and Ignition Coil No.4	
I 7	Igniter and Ignition Coil No.5	
I 8	Igniter and Ignition Coil No.6	
I 9	Igniter and Ignition Coil No.7	
I10	Igniter and Ignition Coil No.8	
I11	Ignition Coil No.1	90980–11246
I12	Ignition Coil No.2	
I13	Ignition Coil No.3	
I14	Injector No.1	90980–11153
I15	Injector No.2	
I16	Injector No.3	
I17	Injector No.4	
I18	Injector No.5	
I19	Injector No.6	
I20	Injector No.7	90980–11153
I21	Injector No.8	
I22	Ignition Key Cylinder Light	90980–10906
I23	Ignition SW	90980–11615
I24	Integration Control and Panel	90980–11125
I25	Integration Control and Panel	90980–10807
I26	Interior Light	90980–10935
J 1	Junction Connector	90980–11714
J 2	Junction Connector	
J 3	Junction Connector	90980–10976
J 4	Junction Connector	90980–11915
J 5	Junction Connector	
J 7	Junction Connector	
J 8	Junction Connector	
J 9	Junction Connector	
J10	Junction Connector	
J11	Junction Connector	90980–11714
J12	Junction Connector	90980–11915
J13	Junction Connector	90980–10976
J14	Junction Connector	90980–11661
J15	Junction Connector	
J16	Junction Connector	90980–11398
J17	Junction Connector	
J18	Junction Connector	90980–11542
J19	Junction Connector	90980–11398
J20	Junction Connector	
J21	Junction Connector	90980–11661
J22	Junction Connector	
J23	Junction Connector	
J24	Junction Connector	
K 1	Knock Sensor 1	90980–11166
K 2	Knock Sensor 2	
L 1	License Plate Light LH	90980–11162
L 2	License Plate Light RH	
L 3	Lumber Support Control SW (Driver's Seat)	90980–10601
M 1	Mass Air Flow Meter	90980–11317
M 4	Mirror Heater SW	90980–10797
N 1	Noise Filter	90980–10843
O 1	O/D Direct Clutch Speed Sensor	90980–11156
O 2	Oil Pressure SW	90980–11363
O 4	O/D Main SW	90980–11470
O 5	Option Connector	90980–11603
O 6	Oil Pressure Sender	90980–11363
P 1	Park/Neutral Position SW	90980–11784
P 2	Power Steering Oil Pressure SW	90980–11428
P 3	Passenger Airbag Manual On–Off SW	90980–12017

L PART NUMBER OF CONNECTORS

Code	Part Name	Part Number
P 4	Passenger Airbag Manual On–Off SW	90980–10906
P 5	Parking Brake SW (A/T)	90980–10871
	Parking Brake SW (M/T)	90980–10825
P 6	Power Outlet	90980–10760
P 7	Power Outlet	
P 8	Personal Light	90980–10908
P 9	Power Window Control SW RH	90980–10789
P10	Power Window Master SW	90980–10997
P11	Power Window Motor Front LH	90980–10860
P12	Power Window Motor Front RH	
P13	Pretensioner LH	90980–11862
P14	Pretensioner RH	
P15	Power Seat Motor (Driver's Seat Front Vertical Control)	90980–10825
P16	Power Seat Control SW (Driver's Seat)	90980–10997
P17	Power Seat Motor (Driver's Seat Rear Vertical Control)	90980–10825
P18	Power Seat Motor (Driver's Seat Reclining Control)	
P19	Power Seat Motor (Driver's Seat Slide Control)	
P20	Power Seat Motor (Driver's Seat Lumber Support Control)	90980–10935
P21	Power Window Control SW (Back Window)	90980–10996
P22	Power Window Motor (Back Window)	90980–10860
R 1	Radio and Player	90980–10996
R 2	Radio and Player	90980–10997
R 3	Rheostat	90980–10216
R 4	Rear Combination Light LH	90980–10988
R 5	Rear Combination Light RH	
R 6	Rear Door Speaker LH	90980–10935
R 7	Rear Door Speaker RH	
R 8	Remote Control Mirror LH (w/ Mirror Heater)	90980–11452
	Remote Control Mirror LH (w/o Mirror Heater)	90980–10907
R 9	Remote Control Mirror LH (w/ Mirror Heater)	90980–11452
	Remote Control Mirror RH (w/o Mirror Heater)	90980–10907
R10	Remote Control Mirror SW	90980–11657
R11	Radio and Player	90980–12259
S 1	Starter (2UZ–FE)	90980–09585
	Starter (5VZ–FE)	90980–09507
S 2	Starter	90980–11400
S 3	Step Light	81945–33010
S 4	Stop Light SW	90980–11118
S 5	Seat Belt Warning Occupant Detection Sensor	90980–11296
S 8	Short Pin	90980–10907
S 9	Short Connector (TVIP)	90980–10908

Code	Part Name	Part Number
S10	Security Indicator and Glass Breakage Sensor Microphone	90980–11013
T 1	Throttle Control Motor	90980–10942
T 2	Throttle Position Sensor (2UZ–FE)	90980–11858
	Throttle Position Sensor (5VZ–FE)	90980–10711
T 3	Transfer Shift Actuator	90980–11858
T 4	Transmission Control Relay	90980–10801
T 5	Turn Signal Flasher	90980–10799
T 6	Trailer Socket (Except Towing Package)	82824–34040
	Trailer Socket (Towing Package)	82824–34030
T 7	Tweeter LH	90980–10906
T 8	Tweeter RH	
T 9	Trailer Converter	90980–11535
T10	TVIP Buzzer	90980–11051
T11	TVIP ECU	90980–11424
T12	TVIP ECU	90980–11392
T13	TVIP ECU	90980–10799
U 1	Unlock Warning SW	90980–10860
V 1	Vapor Pressure Sensor	90980–11143
V 2	Vehicle Speed Sensor (Combination Meter)	
V 3	Vehicle Speed Sensor (Electronically Controlled Transmission)	90980–11156
V 4	VSV (EVAP)	
V 6	Vanity Light LH	90980–11368
V 7	Vanity Light RH	
V 9	VSV (Canister Closed Valve)	90980–11859
W 2	Washer Motor and Washer Level Sensor	90980–11177
W 3	Water Temp. Sender (2UZ–FE)	90980–11428
	Water Temp. Sender (5VZ–FE)	90980–10359
W 4	Wiper Motor	90980–11599

Note: Not all of the above part numbers of the connector are established for the supply.

Code	Part Name	Part Number	Code	Part Name	Part Number

1 TOYOTA TUNDRA ELECTRICAL WIRING DIAGRAM

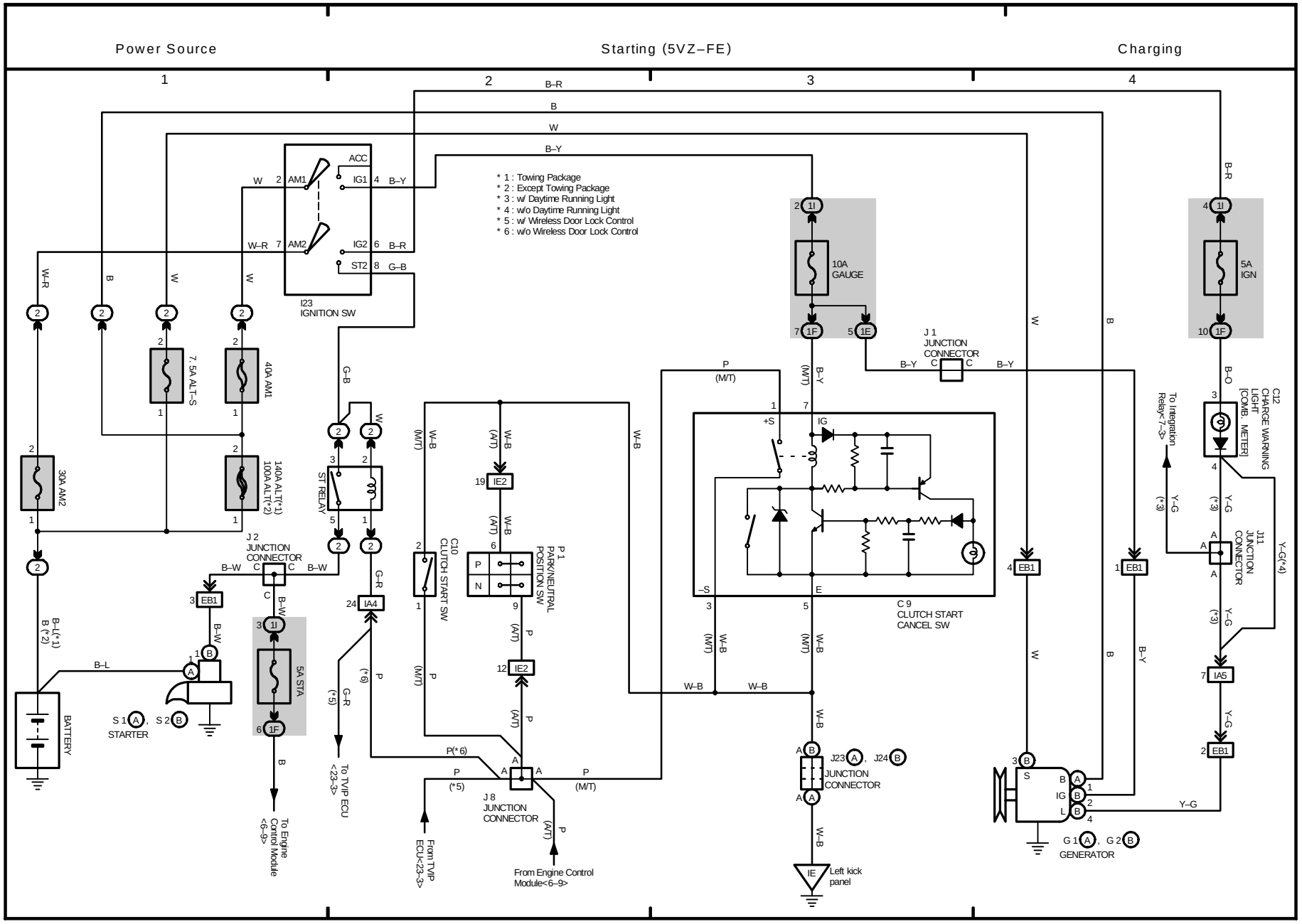

M

M OVERALL ELECTRICAL WIRING DIAGRAM

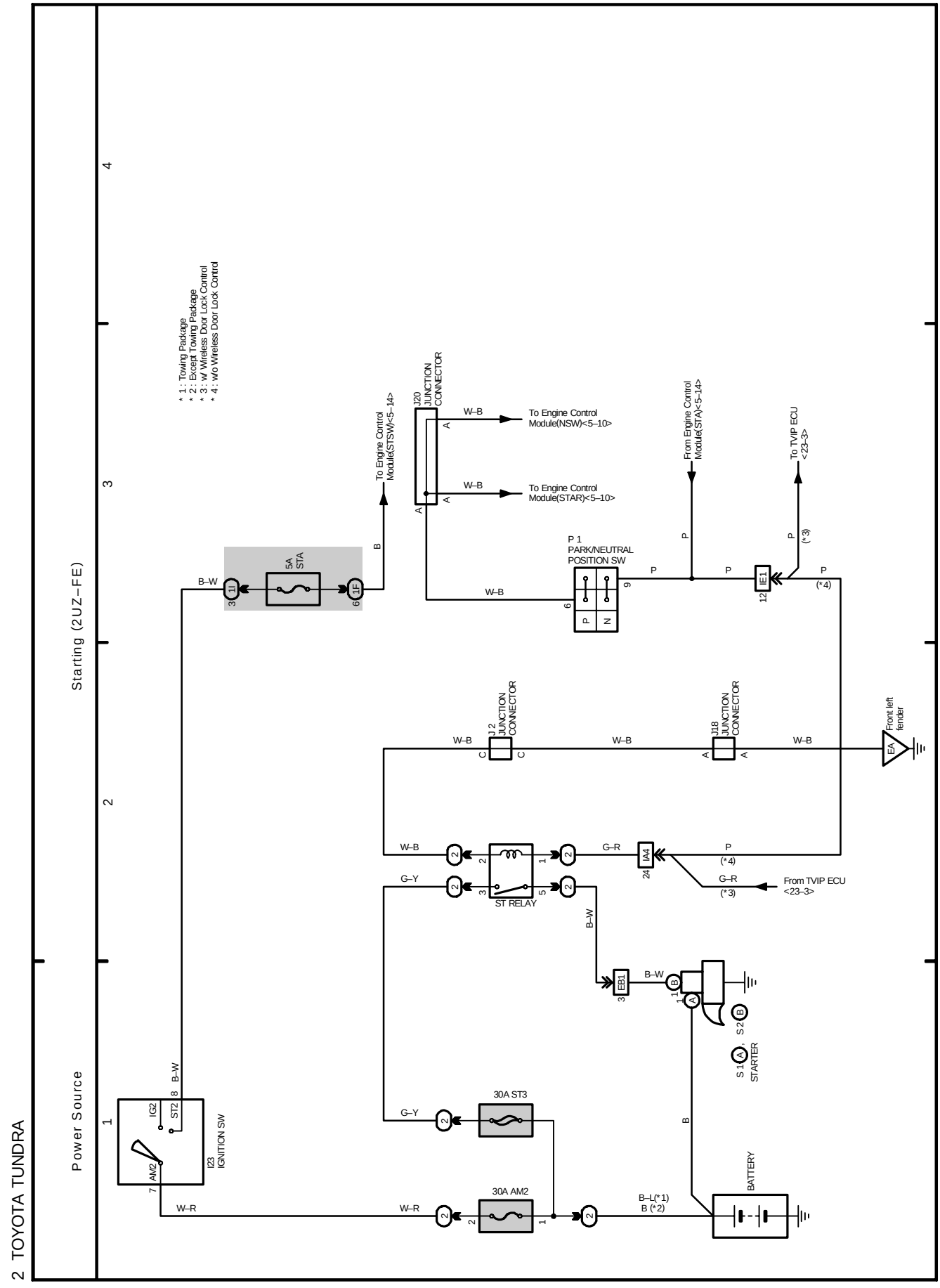

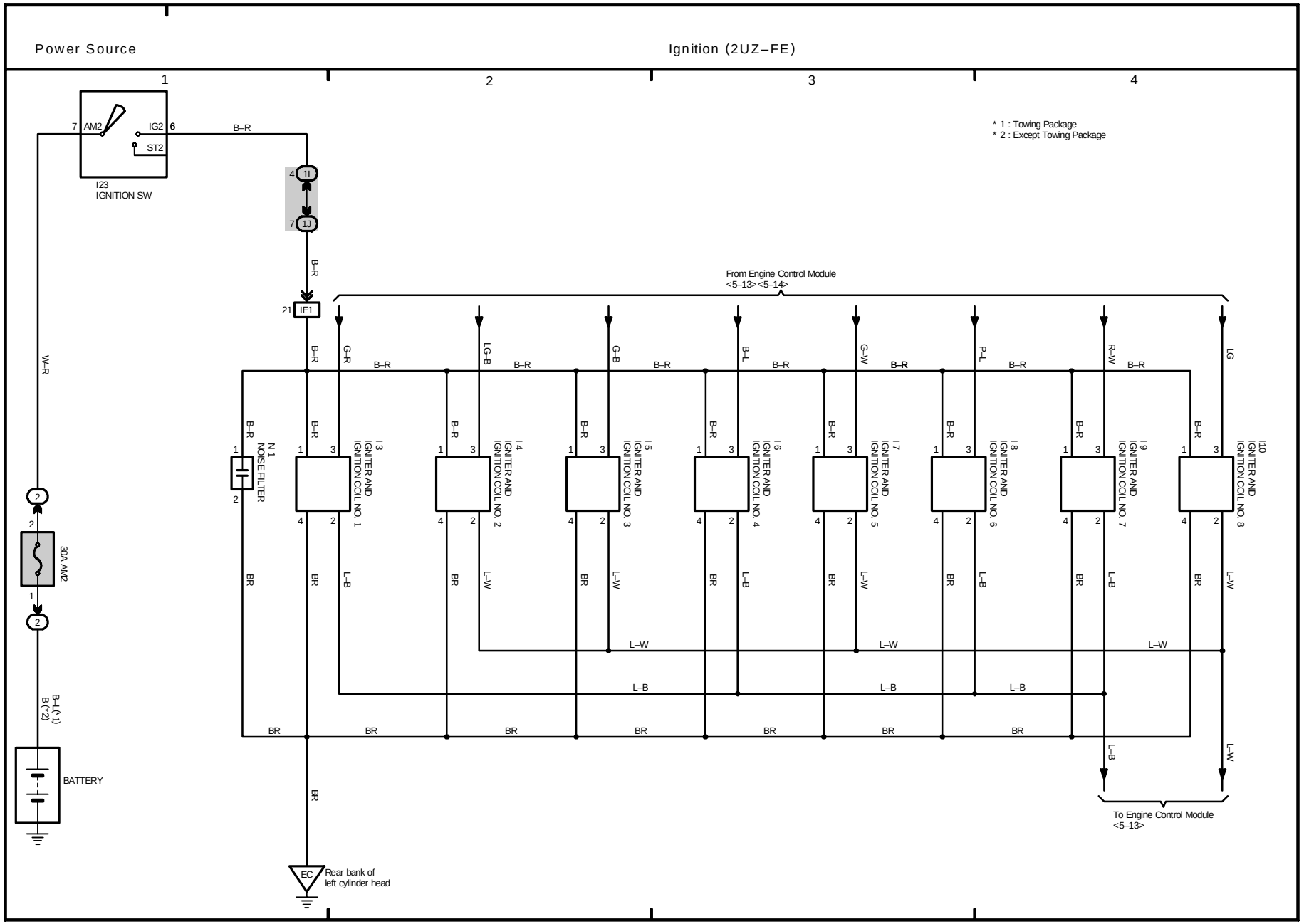
Power Source
Ignition (2UZ–FE)
1
2
3
4
* 1 : Towing Package
* 2 : Except Towing Package
7 AM2
IG2 6
ST2
I23
IGNITION SW
B–R
4 1J
7 1J
B–R
21 IE1
From Engine Control Module
<5–13><5–14>
G–R
LG–B
G–B
B–L
G–W
P–L
R–W
LG
B–R
W–R
N 1
NOISE FILTER
I3 IGNITER AND IGNITION COIL NO. 1
I4 IGNITER AND IGNITION COIL NO. 2
I5 IGNITER AND IGNITION COIL NO. 3
I6 IGNITER AND IGNITION COIL NO. 4
I7 IGNITER AND IGNITION COIL NO. 5
I8 IGNITER AND IGNITION COIL NO. 6
I9 IGNITER AND IGNITION COIL NO. 7
I10 IGNITER AND IGNITION COIL NO. 8
30A AM2
B–L (*1)
B (*2)
BATTERY
BR
L–B
L–W
To Engine Control Module
<5–13>
EC
Rear bank of
left cylinder head

M OVERALL ELECTRICAL WIRING DIAGRAM

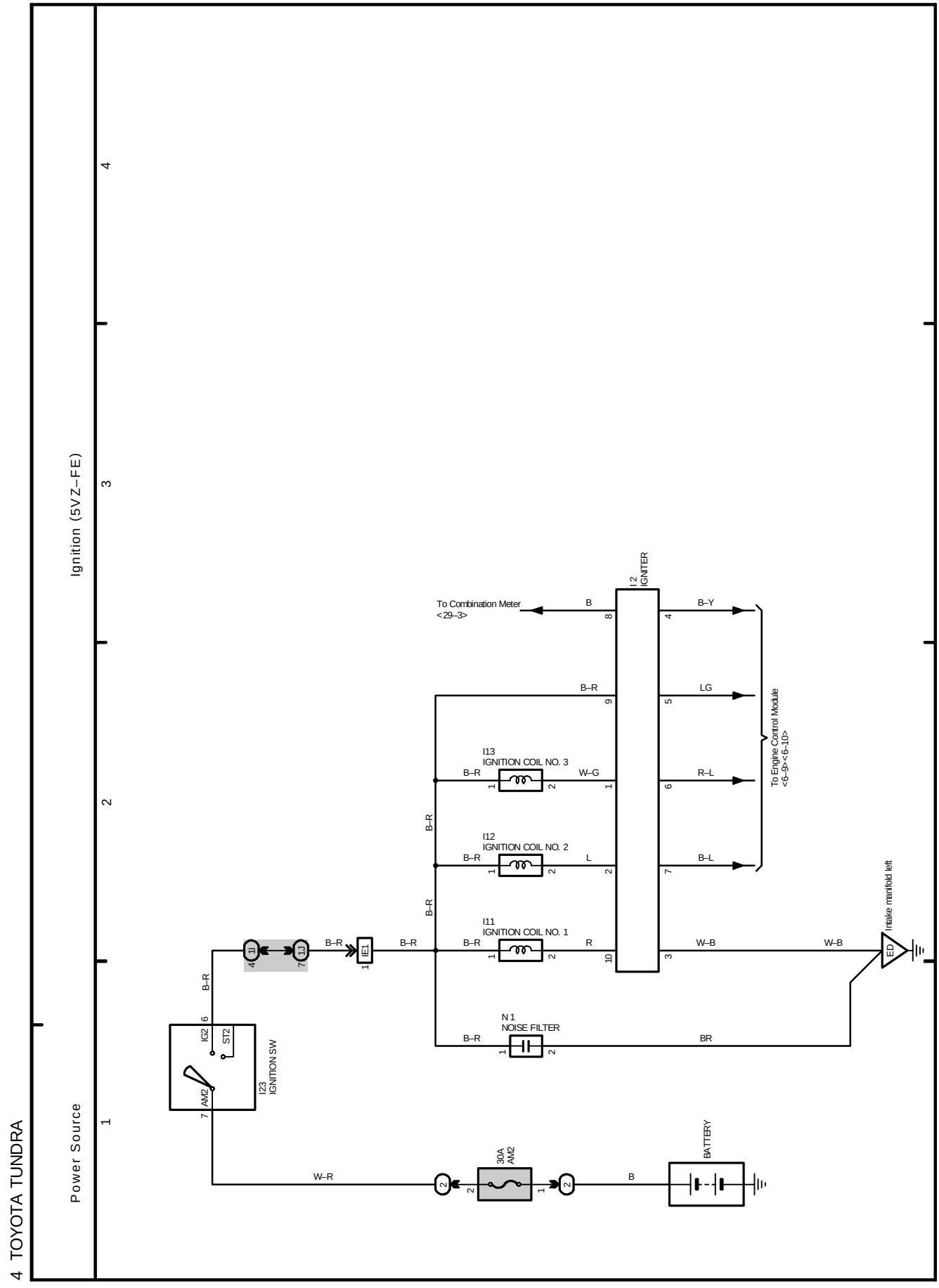

M OVERALL ELECTRICAL WIRING DIAGRAM

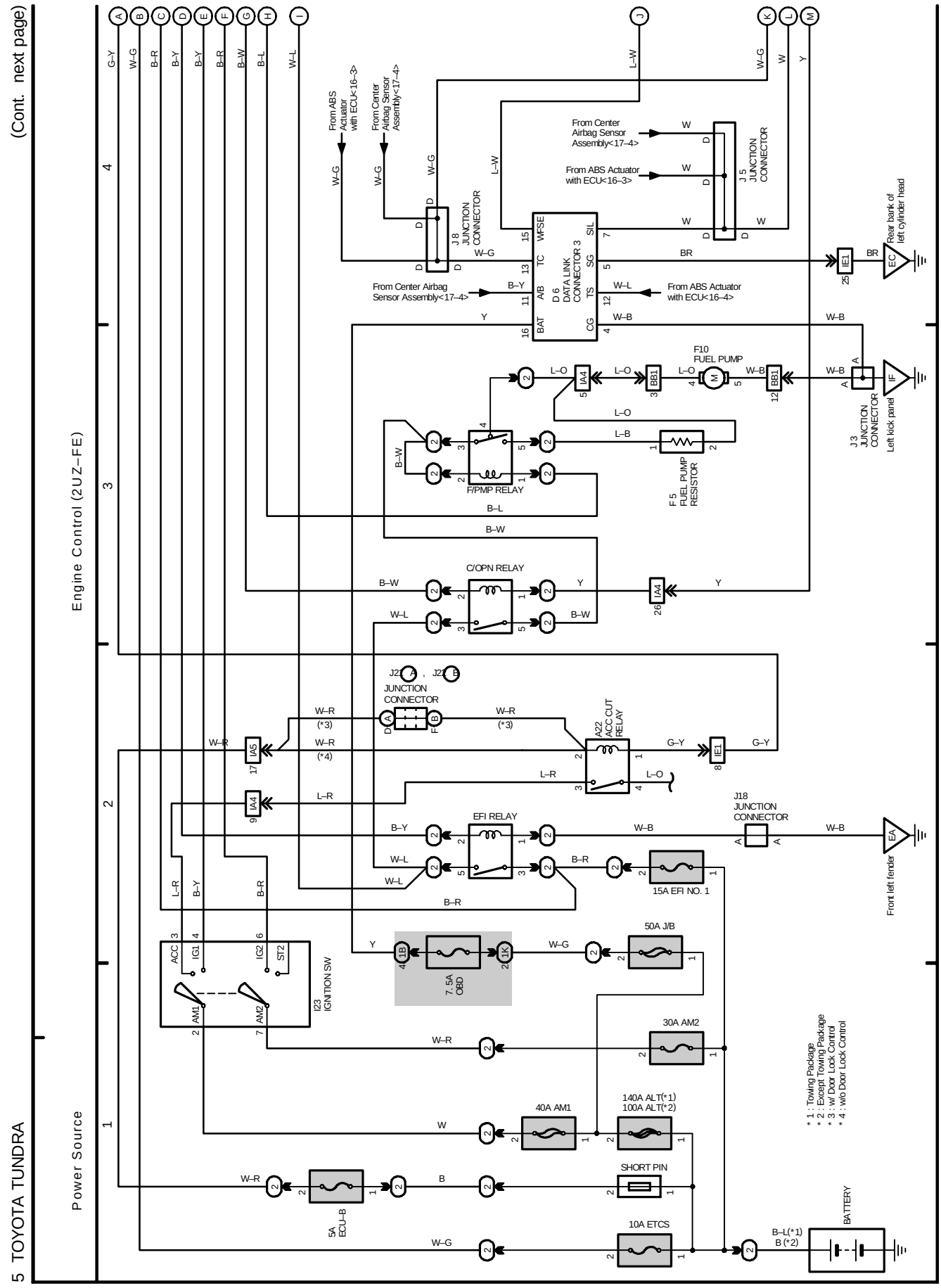

(Cont. next page)

Engine Control (2UZ–FE)

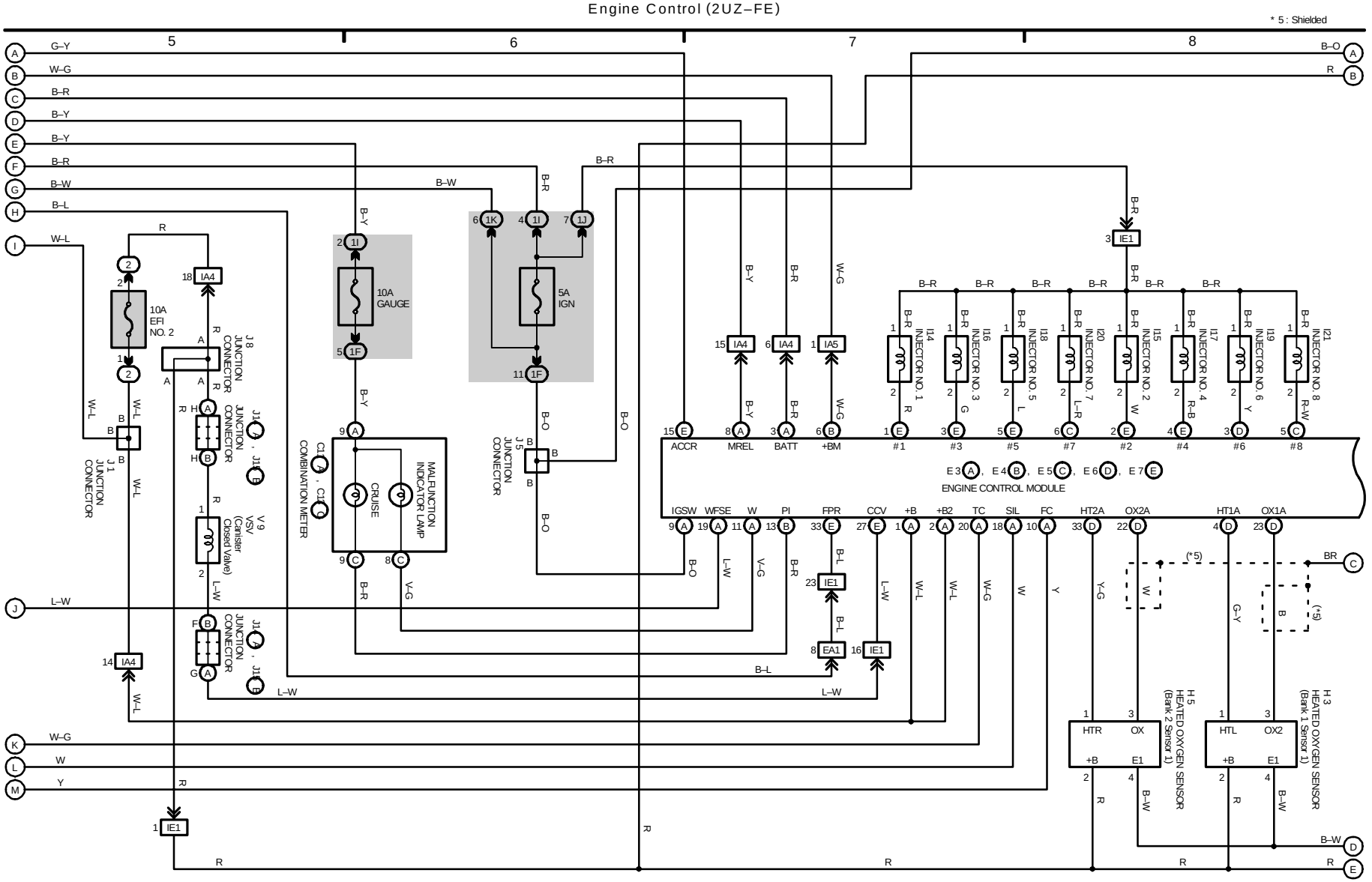

M OVERALL ELECTRICAL WIRING DIAGRAM

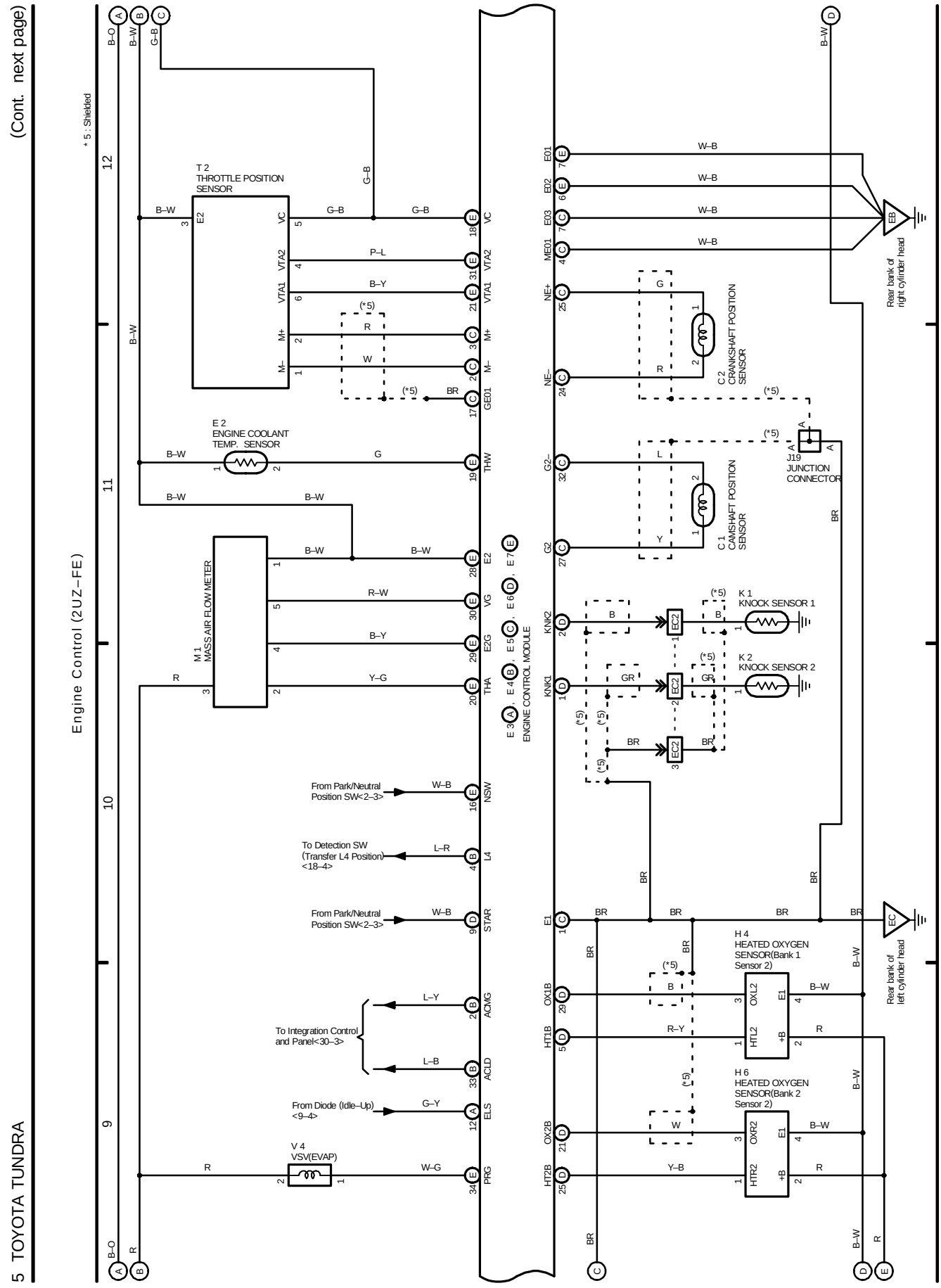

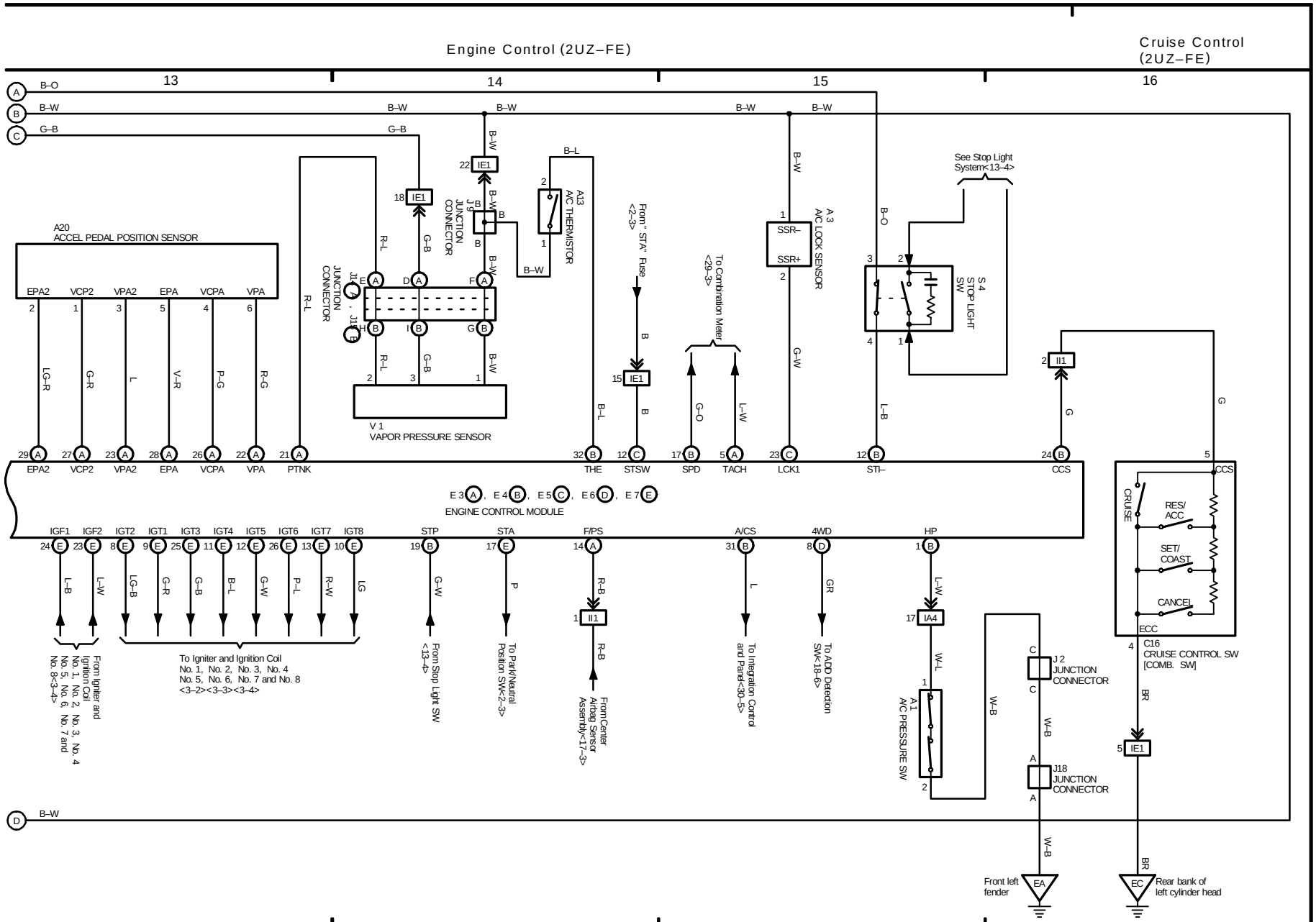
Engine Control (2UZ–FE)
Cruise Control (2UZ–FE)
13
14
15
16
A20
ACCEL PEDAL POSITION SENSOR
EPA2 VCP2 VPA2 EPA VCPA VPA
V 1
VAPOR PRESSURE SENSOR
JUNCTION CONNECTOR
JUNCTION CONNECTOR
A13
A/C THERMISTOR
From "STA" Fuse <2–3>
To Combination Meter <29–3>
A 3
A/C LOCK SENSOR
SSR–
SSR+
See Stop Light System<13–4>
S 4
STOP LIGHT SW
PTNK
THE
STSW
SPD
TACH
LCK1
STI–
CCS
E 3, E 4, E 5, E 6, E 7
ENGINE CONTROL MODULE
IGF1 IGF2 IGT2 IGT1 IGT3 IGT4 IGT5 IGT6 IGT7 IGT8 STP STA F/PS A/CS 4WD HP
To Igniter and Ignition Coil No. 1, No. 2, No. 3, No. 4 No. 5, No. 6, No. 7 and No. 8 <3–2><3–3><3–4>
From Igniter and Ignition Coil No. 1, No. 2, No. 3, No. 4 No. 5, No. 6, No. 7 and No. 8<3–4>
From Stop Light SW <13–4>
To Park/Neutral Position SW<2–3>
From Center Airbag Sensor Assembly<17–3>
To Integration Control and Panel<30–5>
To ADD Detection SW<18–6>
A1
A/C PRESSURE SW
J 2
JUNCTION CONNECTOR
J18
JUNCTION CONNECTOR
C16
CRUISE CONTROL SW [COMB. SW]
CRUISE
RES/ ACC
SET/ COAST
CANCEL
ECC
Front left fender
EA
EC
Rear bank of left cylinder head

M OVERALL ELECTRICAL WIRING DIAGRAM

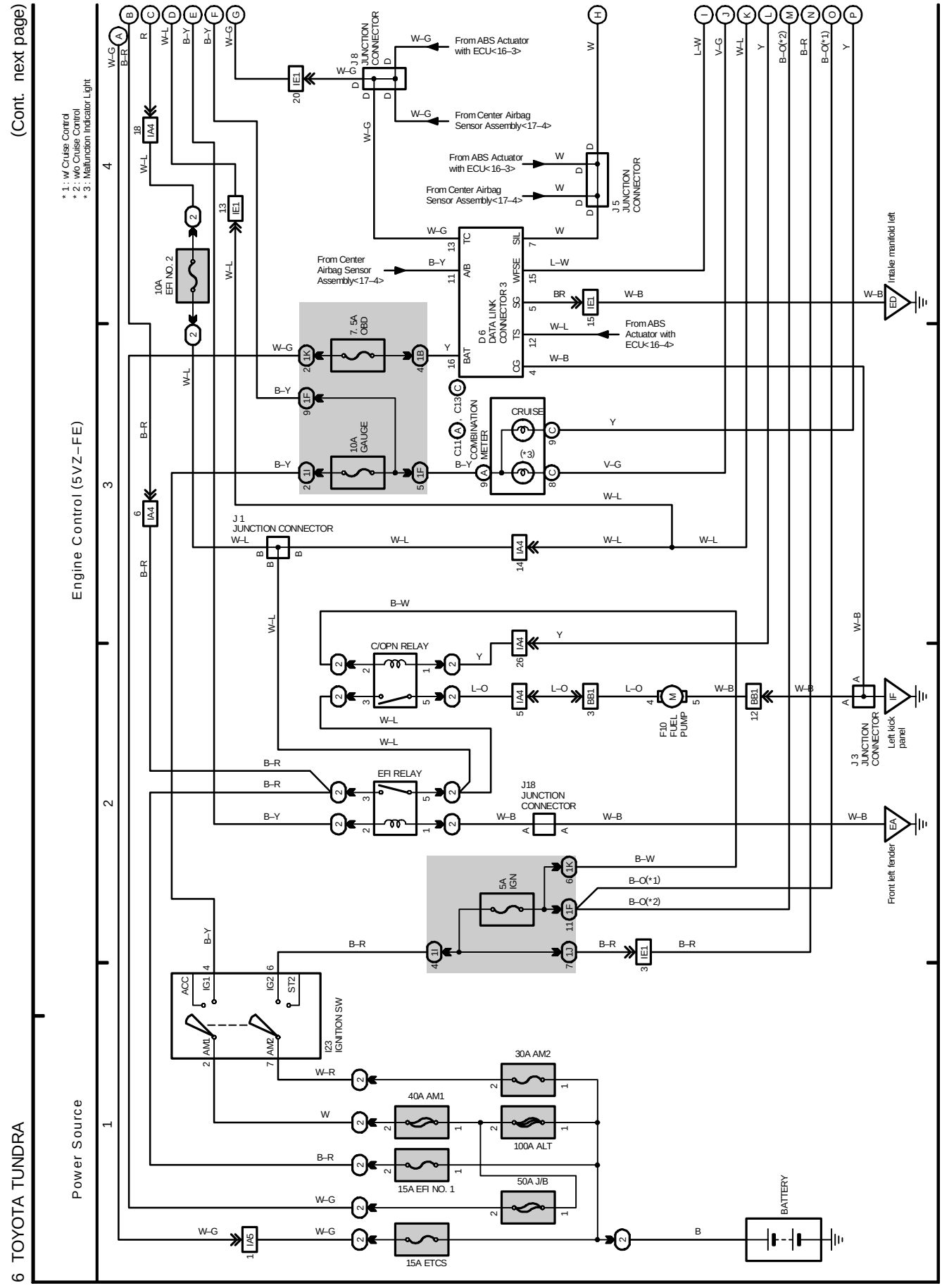

(Cont. next page)

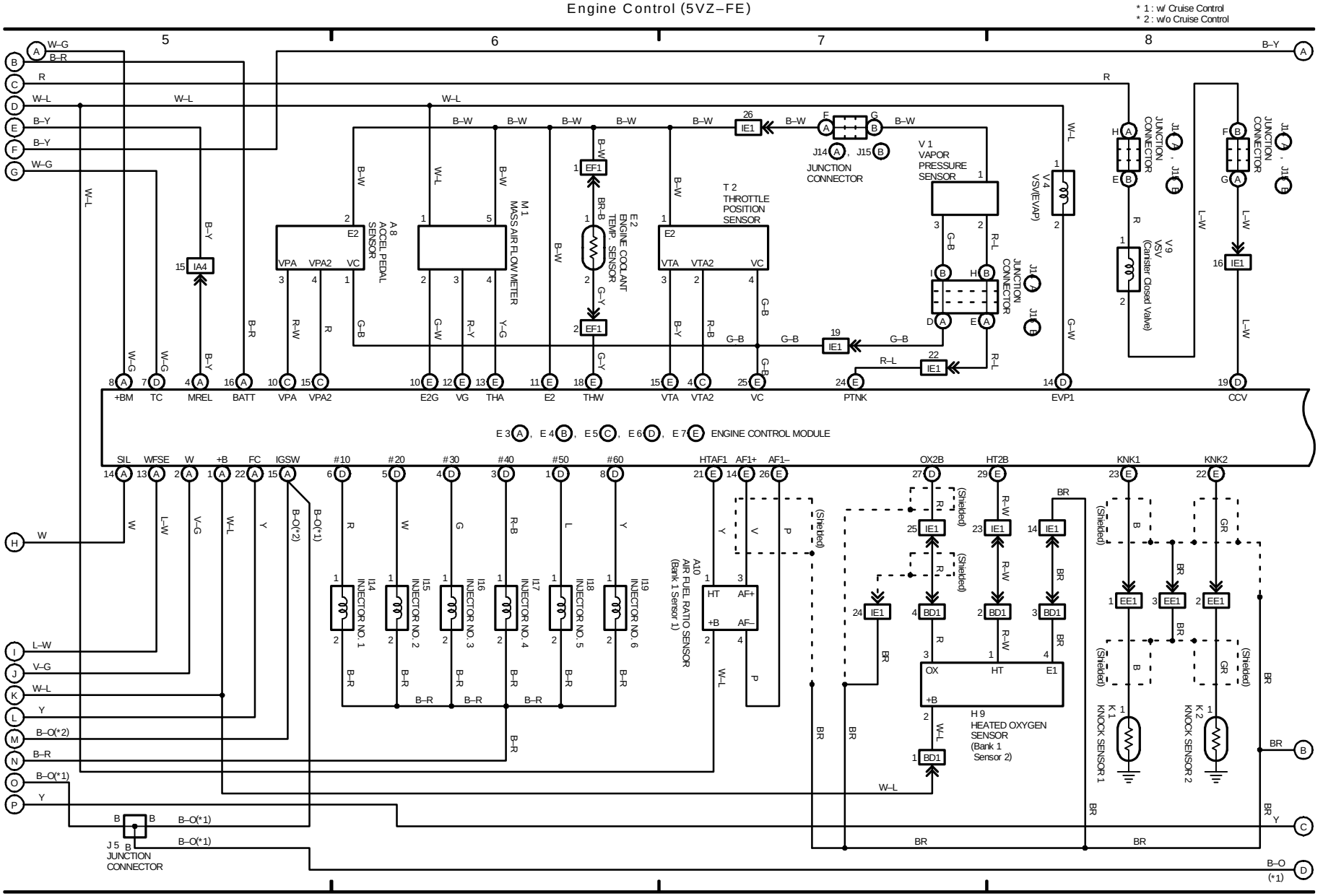

M OVERALL ELECTRICAL WIRING DIAGRAM

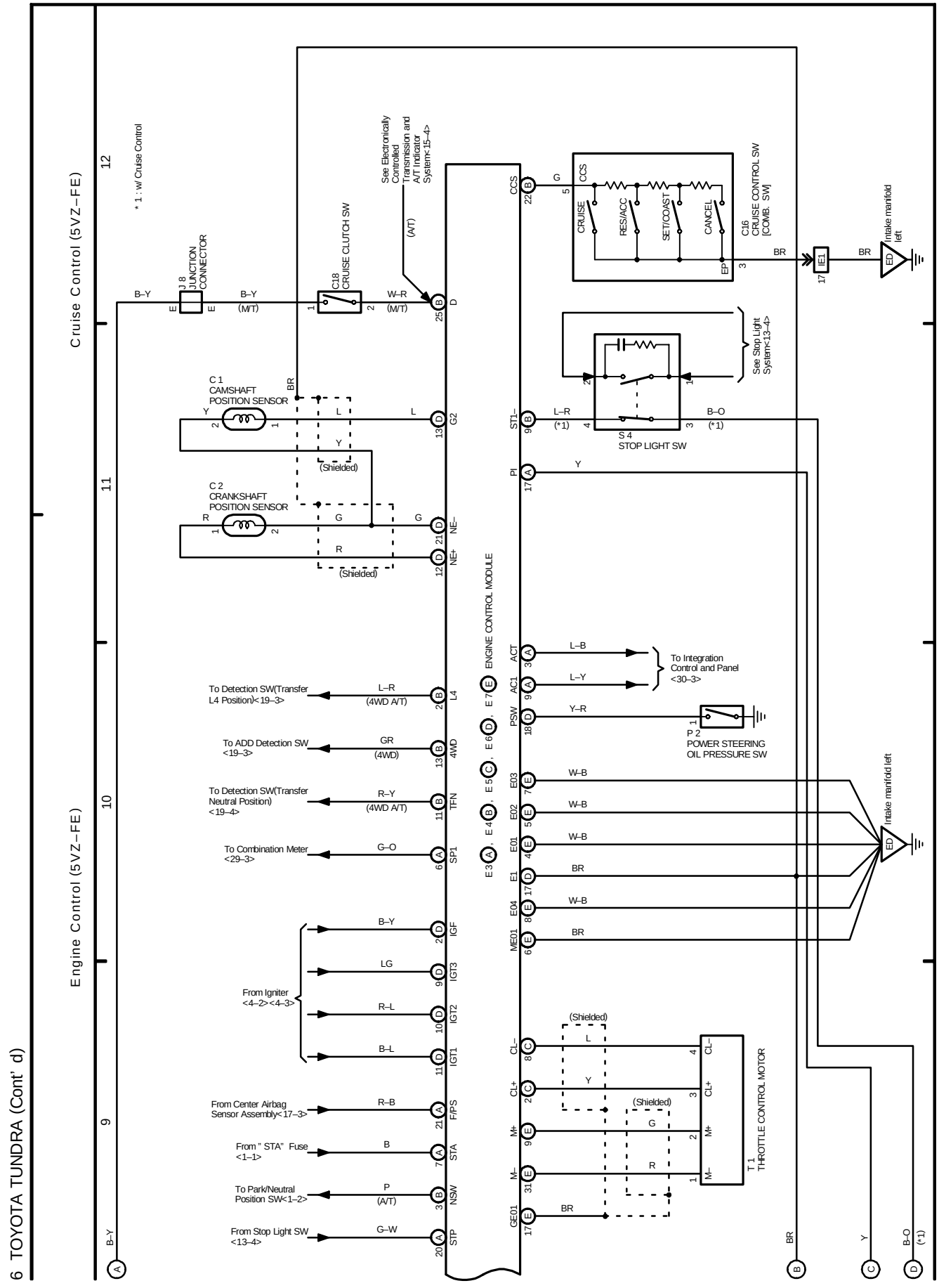

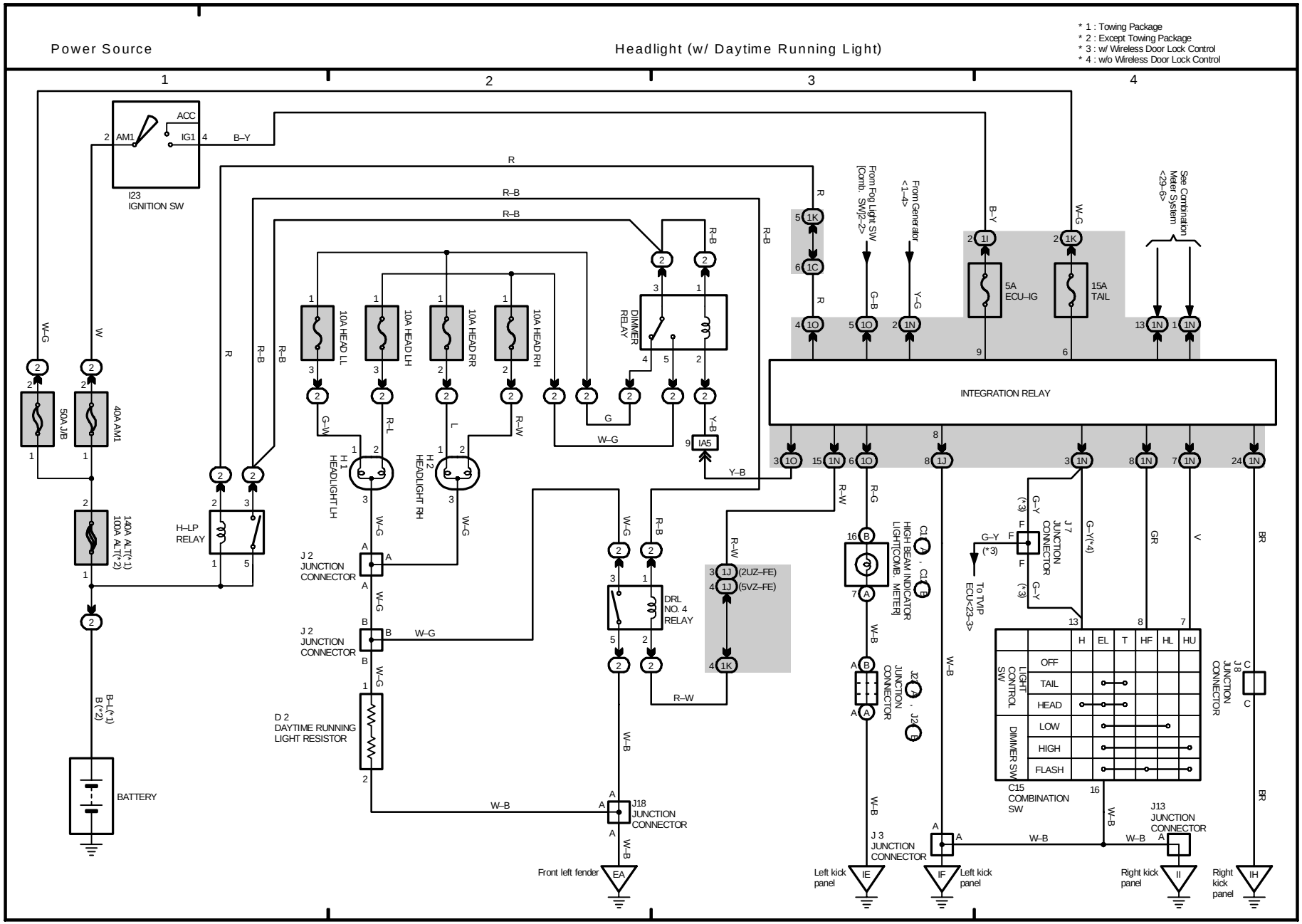
Power Source
Headlight (w/ Daytime Running Light)
* 1 : Towing Package
* 2 : Except Towing Package
* 3 : w/ Wireless Door Lock Control
* 4 : w/o Wireless Door Lock Control
1
2
3
4
ACC
IG1
AM1
B–Y
I23
IGNITION SW
R
R–B
W–G
W
50A J/B
40A AM1
140A ALT(*1)
100A ALT(*2)
B–L(*1)
B (*2)
BATTERY
H–LP
RELAY
10A HEAD LL
10A HEAD LH
10A HEAD RR
10A HEAD RH
DIMMER
RELAY
H1
HEADLIGHT LH
H2
HEADLIGHT RH
G–W
R–L
L
R–W
G
W–G
Y–B
IA5
J 2
JUNCTION
CONNECTOR
D 2
DAYTIME RUNNING
LIGHT RESISTOR
DRL
NO. 4
RELAY
(2UZ–FE)
(5VZ–FE)
J18
JUNCTION
CONNECTOR
Front left fender
EA
From Fog Light SW
[Comb. SW]<2–2>
From Generator
<1–4>
G–B
Y–G
5A
ECU–IG
15A
TAIL
See Combination
Meter System
<23–6>
INTEGRATION RELAY
R–G
HIGH BEAM INDICATOR
LIGHT[COMB. METER]
J 3
JUNCTION
CONNECTOR
Left kick
panel
IE
IF
Left kick
panel
To TVIP
ECU<23–3>
G–Y
(*3)
J 7
JUNCTION
CONNECTOR
G–Y(*4)
GR
V
BR
C15
COMBINATION
SW
LIGHT
CONTROL
SW
DIMMER SW
OFF
TAIL
HEAD
LOW
HIGH
FLASH
H
EL
T
HF
HL
HU
J13
JUNCTION
CONNECTOR
Right kick
panel
II
IH
J8
JUNCTION
CONNECTOR

M OVERALL ELECTRICAL WIRING DIAGRAM

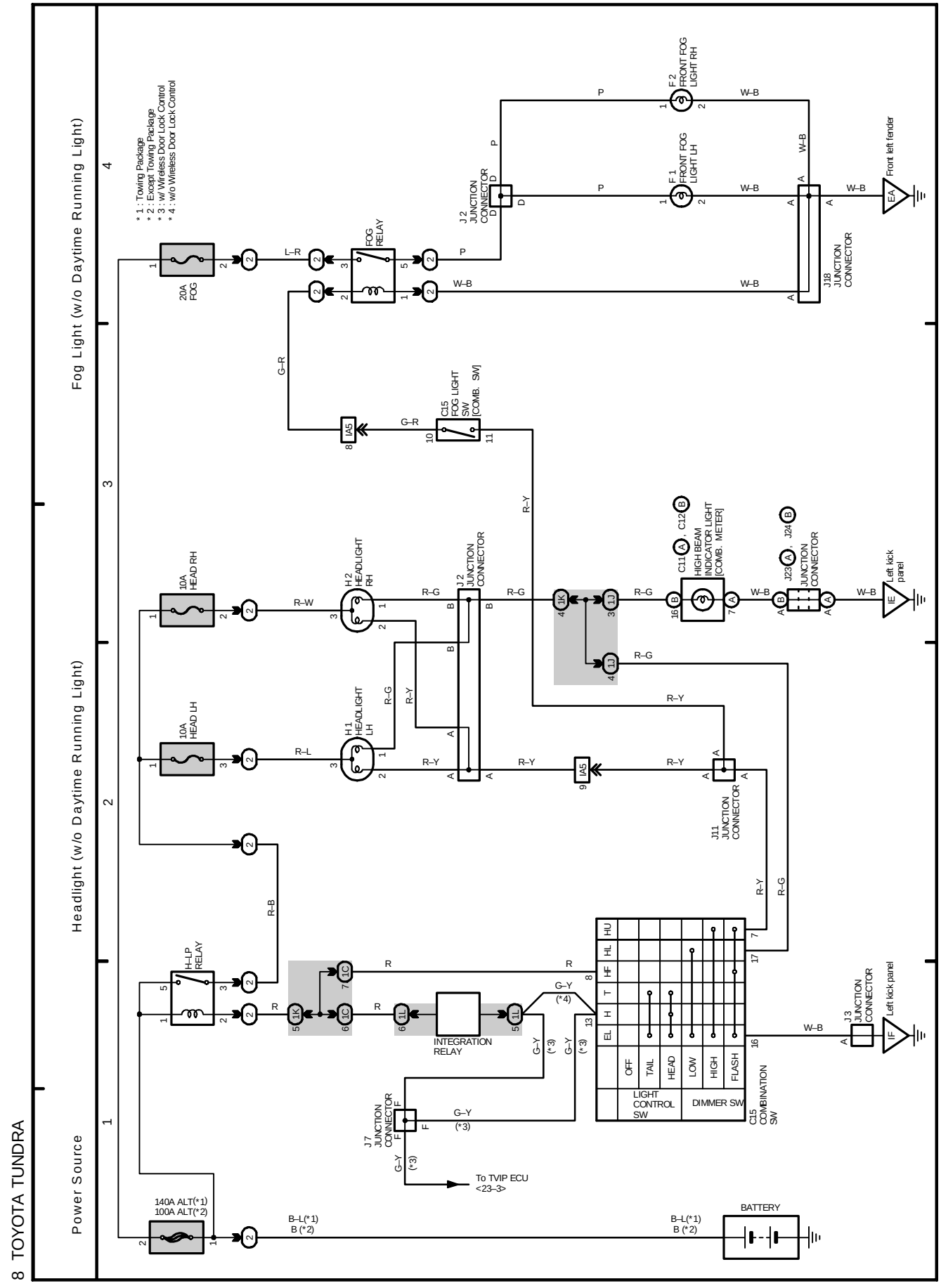

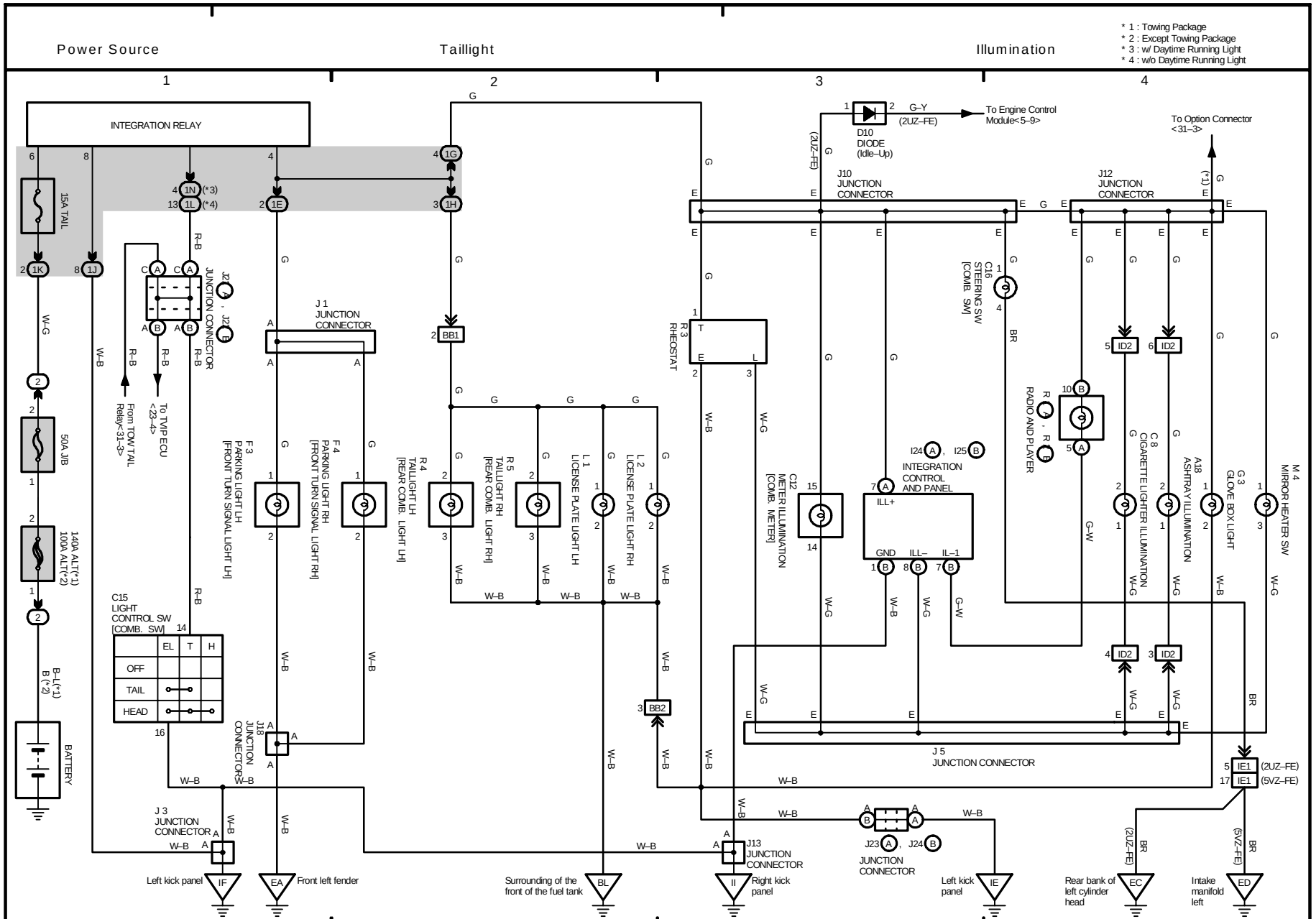
Power Source
Taillight
Illumination
* 1 : Towing Package
* 2 : Except Towing Package
* 3 : w/ Daytime Running Light
* 4 : w/o Daytime Running Light
INTEGRATION RELAY
15A TAIL
50A J/B
140A ALT(*1)
100A ALT(*2)
BATTERY
B–L(*1)
B(*2)
C15 LIGHT CONTROL SW [COMB. SW]
OFF
TAIL
HEAD
EL
T
H
J 1 JUNCTION CONNECTOR
J 2 JUNCTION CONNECTOR
J 3 JUNCTION CONNECTOR
J18 JUNCTION CONNECTOR
J10 JUNCTION CONNECTOR
J12 JUNCTION CONNECTOR
J 5 JUNCTION CONNECTOR
J13 JUNCTION CONNECTOR
J23 , J24 JUNCTION CONNECTOR
From TOW TAIL Relay<31–3>
To TVIP ECU <23–4>
F 3 PARKING LIGHT LH [FRONT TURN SIGNAL LIGHT LH]
F 4 PARKING LIGHT RH [FRONT TURN SIGNAL LIGHT RH]
R 4 TAILLIGHT LH [REAR COMB. LIGHT LH]
R 5 TAILLIGHT RH [REAR COMB. LIGHT RH]
L 1 LICENSE PLATE LIGHT LH
L 2 LICENSE PLATE LIGHT RH
D10 DIODE (Idle–Up)
To Engine Control Module< 5–9>
To Option Connector <31–3>
R 3 RHEOSTAT
C16 STEERING SW [COMB. SW]
C12 METER ILLUMINATION [COMB. METER]
INTEGRATION CONTROL AND PANEL
ILL+
GND
ILL–
IL–1
RADIO AND PLAYER
C 8 CIGARETTE LIGHTER ILLUMINATION
A18 ASHTRAY ILLUMINATION
G 3 GLOVE BOX LIGHT
M 4 MIRROR HEATER SW
Left kick panel
Front left fender
Surrounding of the front of the fuel tank
Right kick panel
Left kick panel
Rear bank of left cylinder head
Intake manifold left

M OVERALL ELECTRICAL WIRING DIAGRAM

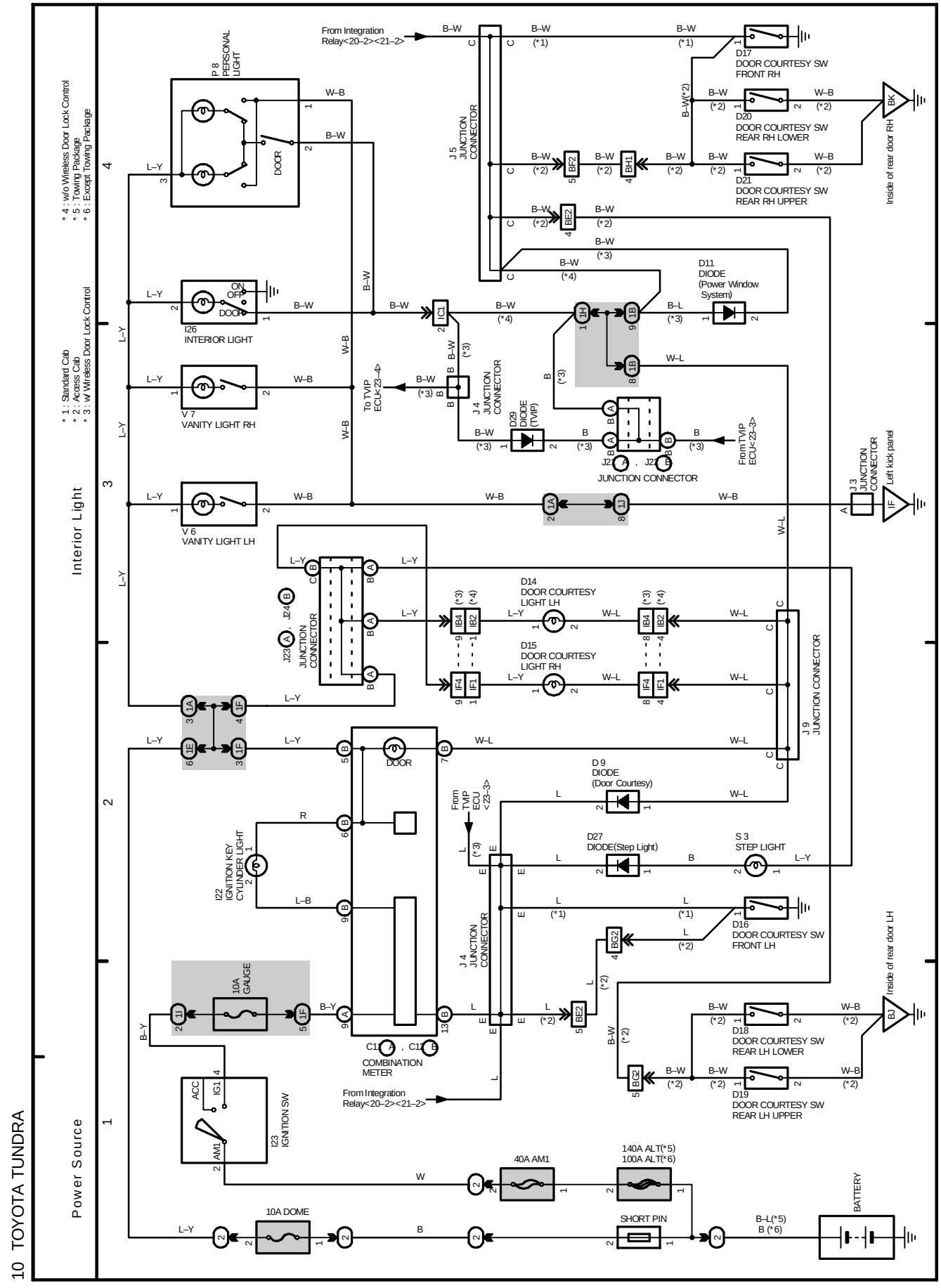

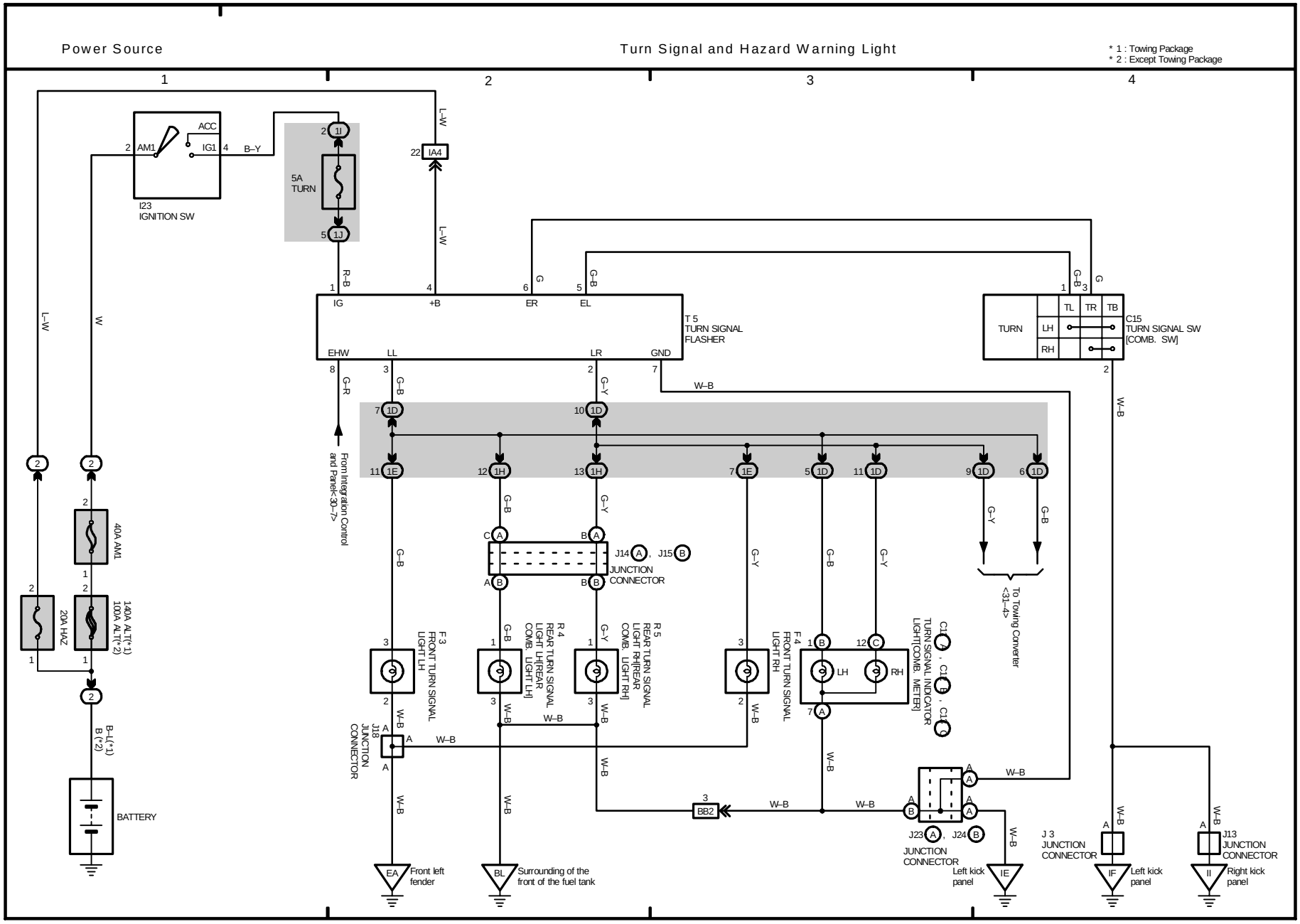
Power Source
Turn Signal and Hazard Warning Light
* 1 : Towing Package
* 2 : Except Towing Package
1
2
3
4
ACC
IG1
AM1
B–Y
I23
IGNITION SW
5A
TURN
1I
1J
IA4
L–W
W
R–B
G
G–B
IG
+B
ER
EL
T 5
TURN SIGNAL
FLASHER
EHW
LL
LR
GND
G–R
G–Y
W–B
From Integration Control and Panel<30–7>
TURN
TL
TR
TB
LH
RH
C15
TURN SIGNAL SW
[COMB. SW]
1D
1E
1H
To Towing Converter
<31–4>
40A AM1
140A ALT(*1)
100A ALT(*2)
20A HAZ
B–L(*1)
B (*2)
BATTERY
J14
J15
JUNCTION
CONNECTOR
F 3
FRONT TURN SIGNAL
LIGHT LH
R 4
REAR TURN SIGNAL
LIGHT LH[REAR
COMB. LIGHT LH]
R 5
REAR TURN SIGNAL
LIGHT RH[REAR
COMB. LIGHT RH]
F 4
FRONT TURN SIGNAL
LIGHT RH
LH
RH
C11
C12
C13
C14
TURN SIGNAL INDICATOR
LIGHT[COMB. METER]
J18
JUNCTION
CONNECTOR
BB2
J23
J24
JUNCTION
CONNECTOR
J 3
JUNCTION
CONNECTOR
J13
JUNCTION
CONNECTOR
EA
Front left
fender
BL
Surrounding of the
front of the fuel tank
IE
Left kick
panel
IF
Left kick
panel
II
Right kick
panel

M OVERALL ELECTRICAL WIRING DIAGRAM

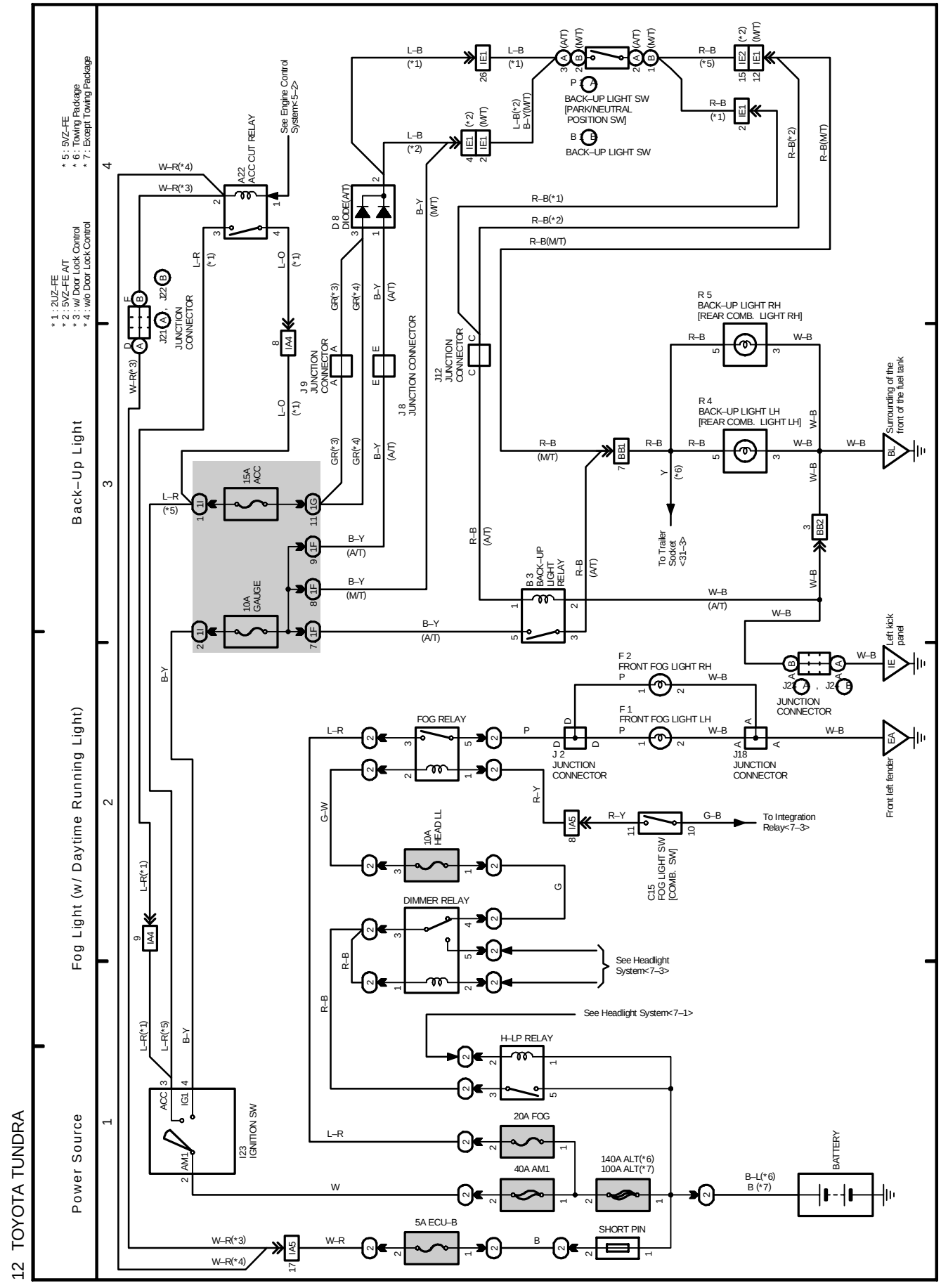

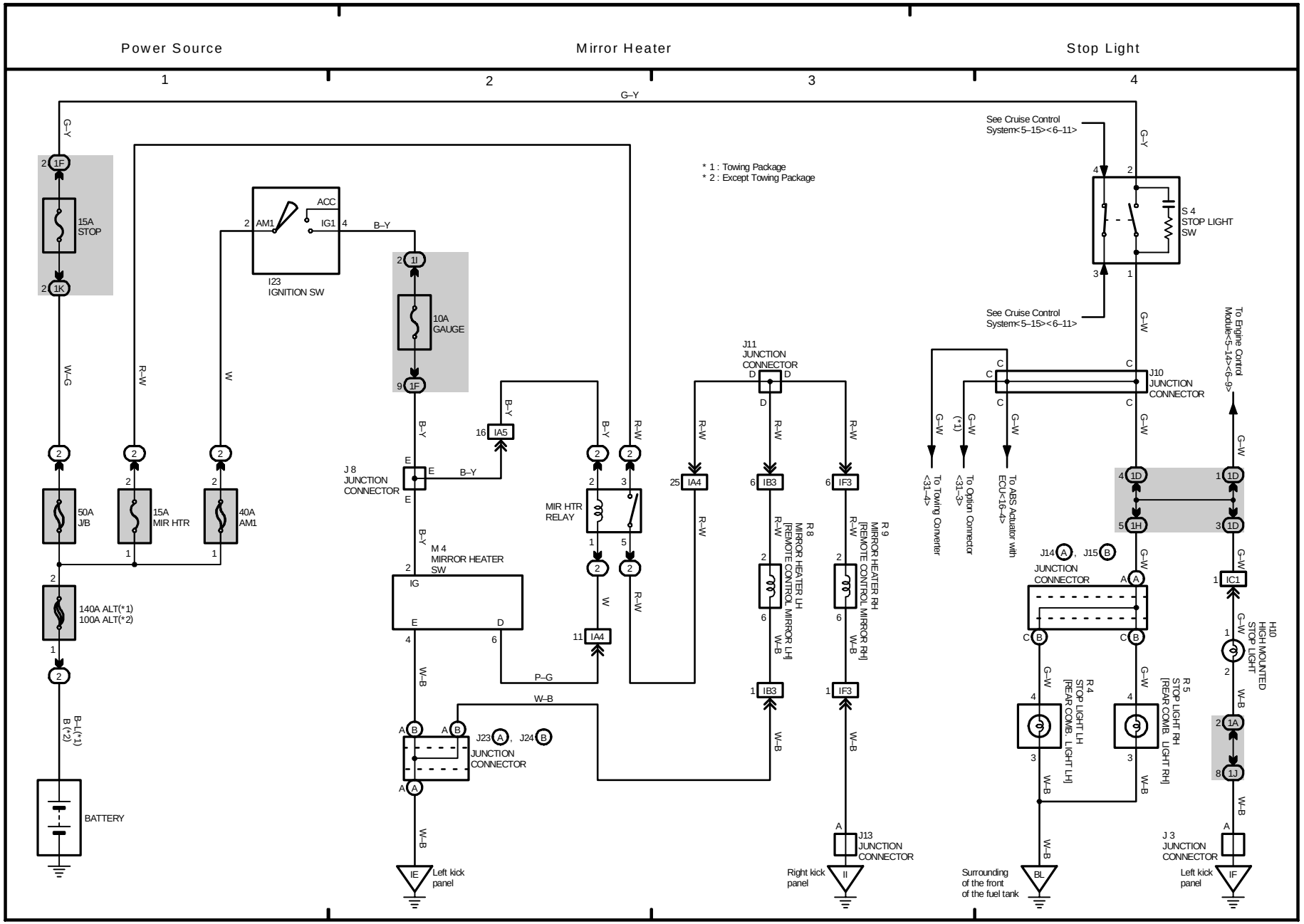
Power Source
Mirror Heater
Stop Light
1
2
3
4
* 1 : Towing Package
* 2 : Except Towing Package
G–Y
15A STOP
50A J/B
15A MIR HTR
40A AM1
140A ALT(*1) 100A ALT(*2)
B–L(*1) B (*2)
BATTERY
I23 IGNITION SW
ACC
AM1
IG1
B–Y
10A GAUGE
W–G
R–W
W
J 8 JUNCTION CONNECTOR
M 4 MIRROR HEATER SW
IG
P–G
W–B
MIR HTR RELAY
J23
J24
JUNCTION CONNECTOR
IE
Left kick panel
J11 JUNCTION CONNECTOR
R 8 MIRROR HEATER LH [REMOTE CONTROL MIRROR LH]
R 9 MIRROR HEATER RH [REMOTE CONTROL MIRROR RH]
J13 JUNCTION CONNECTOR
Right kick panel
II
See Cruise Control System<5–15><6–11>
S 4 STOP LIGHT SW
J10 JUNCTION CONNECTOR
To Towing Converter <31–4>
To Option Connector <31–3>
To ABS Actuator with ECU<16–4>
To Engine Control Module<5–14><6–9>
J14
J15
JUNCTION CONNECTOR
R 4 STOP LIGHT LH [REAR COMB. LIGHT LH]
R 5 STOP LIGHT RH [REAR COMB. LIGHT RH]
Surrounding of the front of the fuel tank
BL
H10 HIGH MOUNTED STOP LIGHT
J 3 JUNCTION CONNECTOR
Left kick panel
IF

M OVERALL ELECTRICAL WIRING DIAGRAM

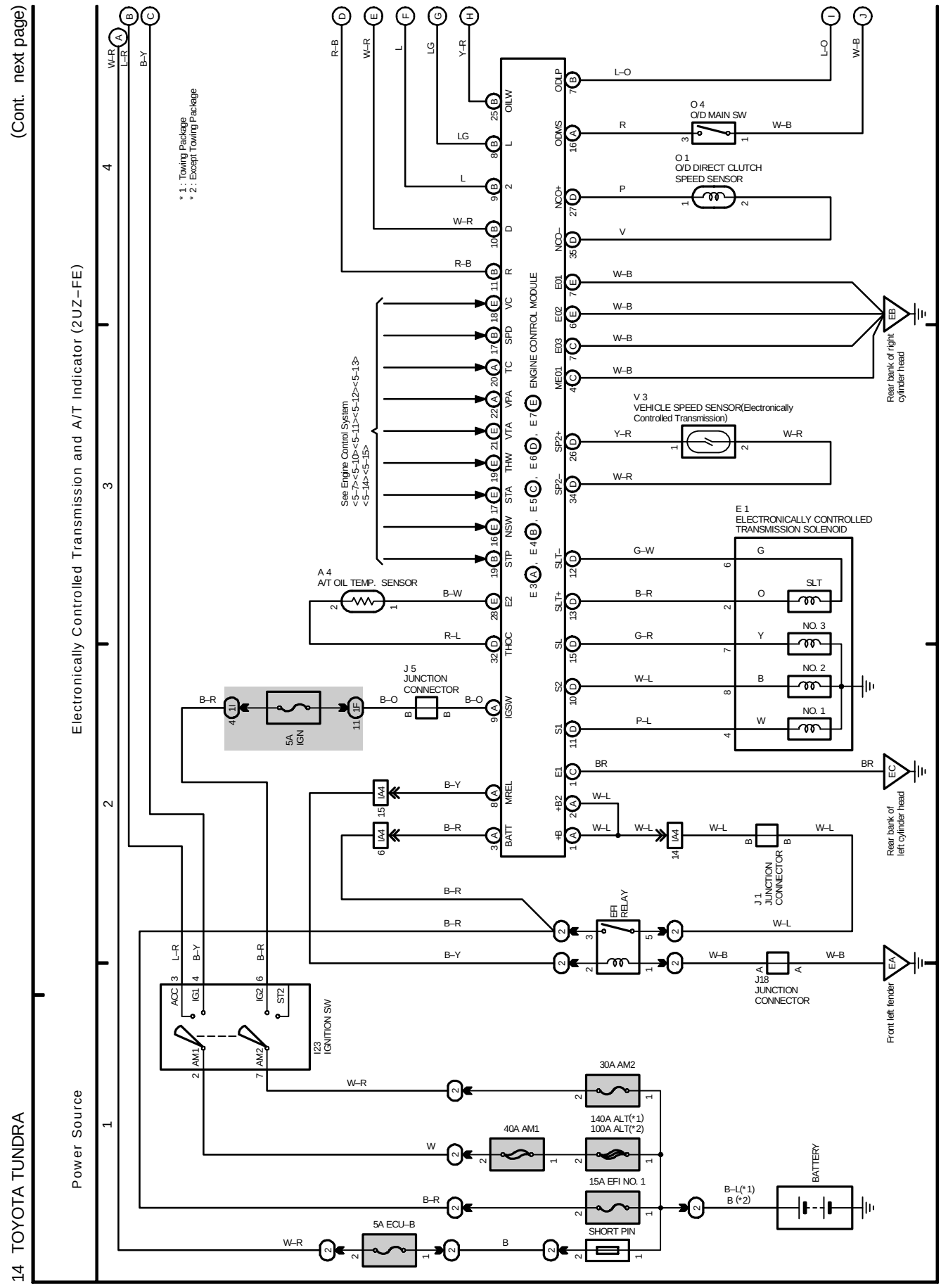

Electronically Controlled Transmission and A/T Indicator (2UZ–FE)

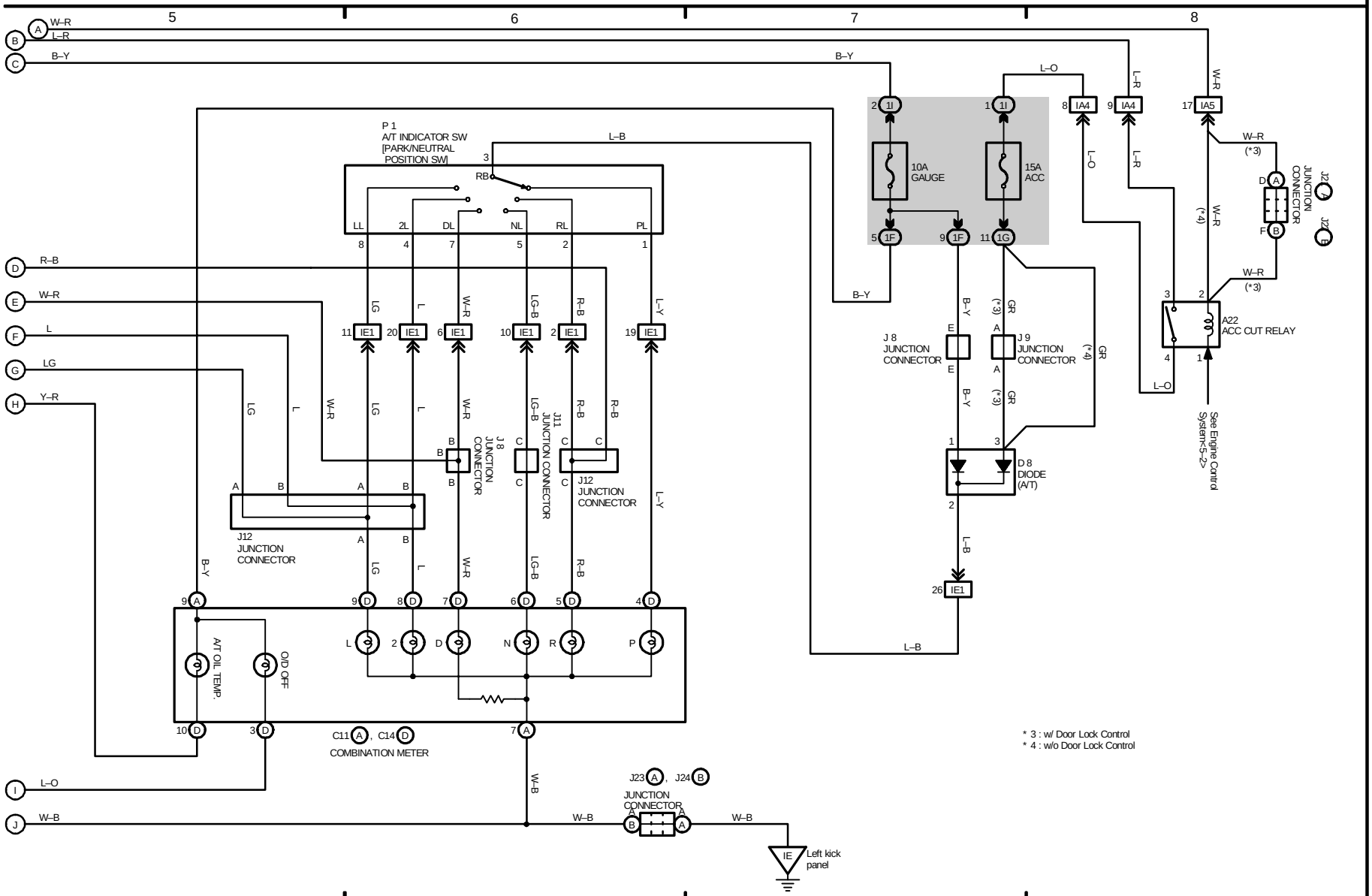

M OVERALL ELECTRICAL WIRING DIAGRAM

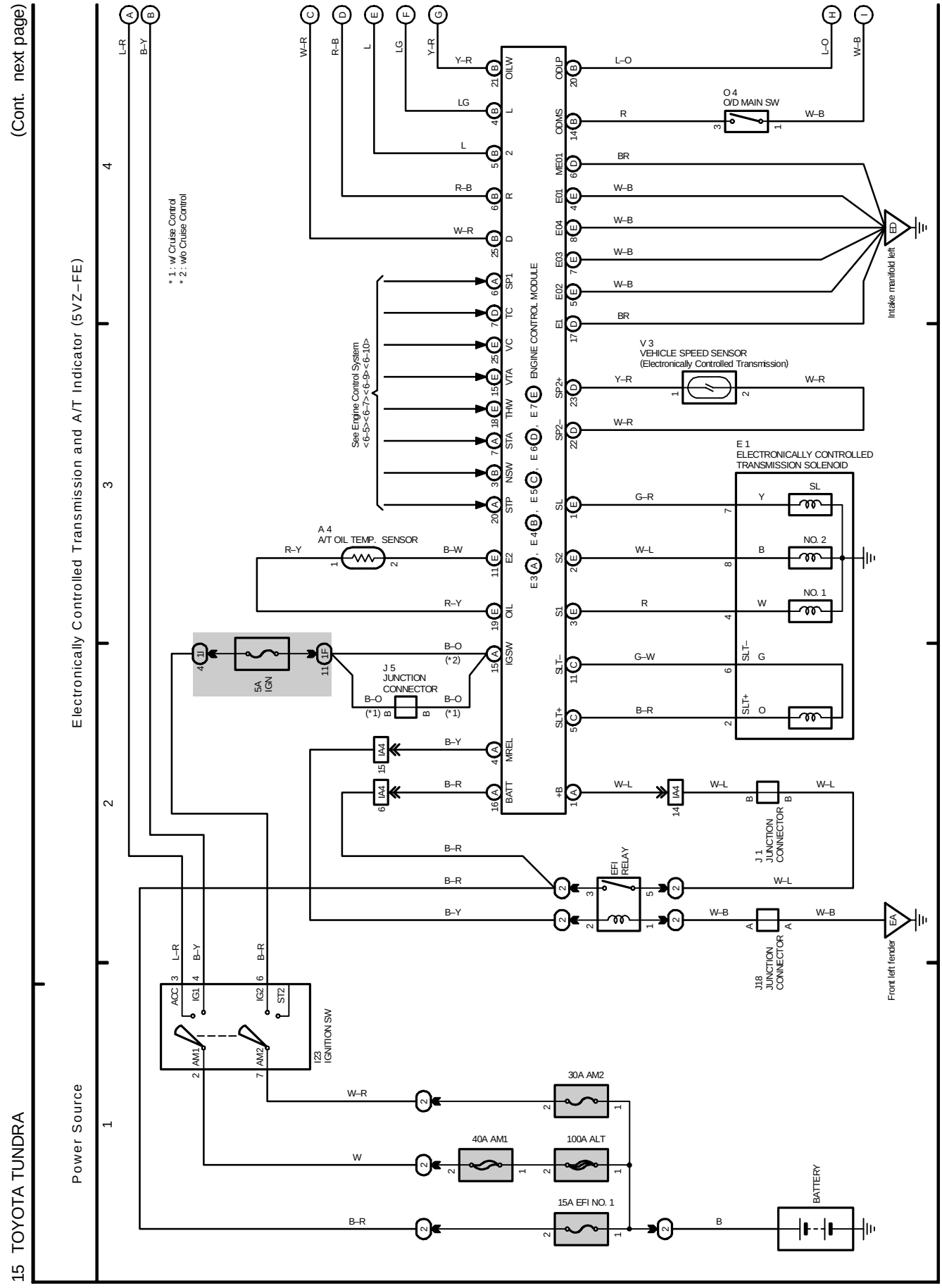

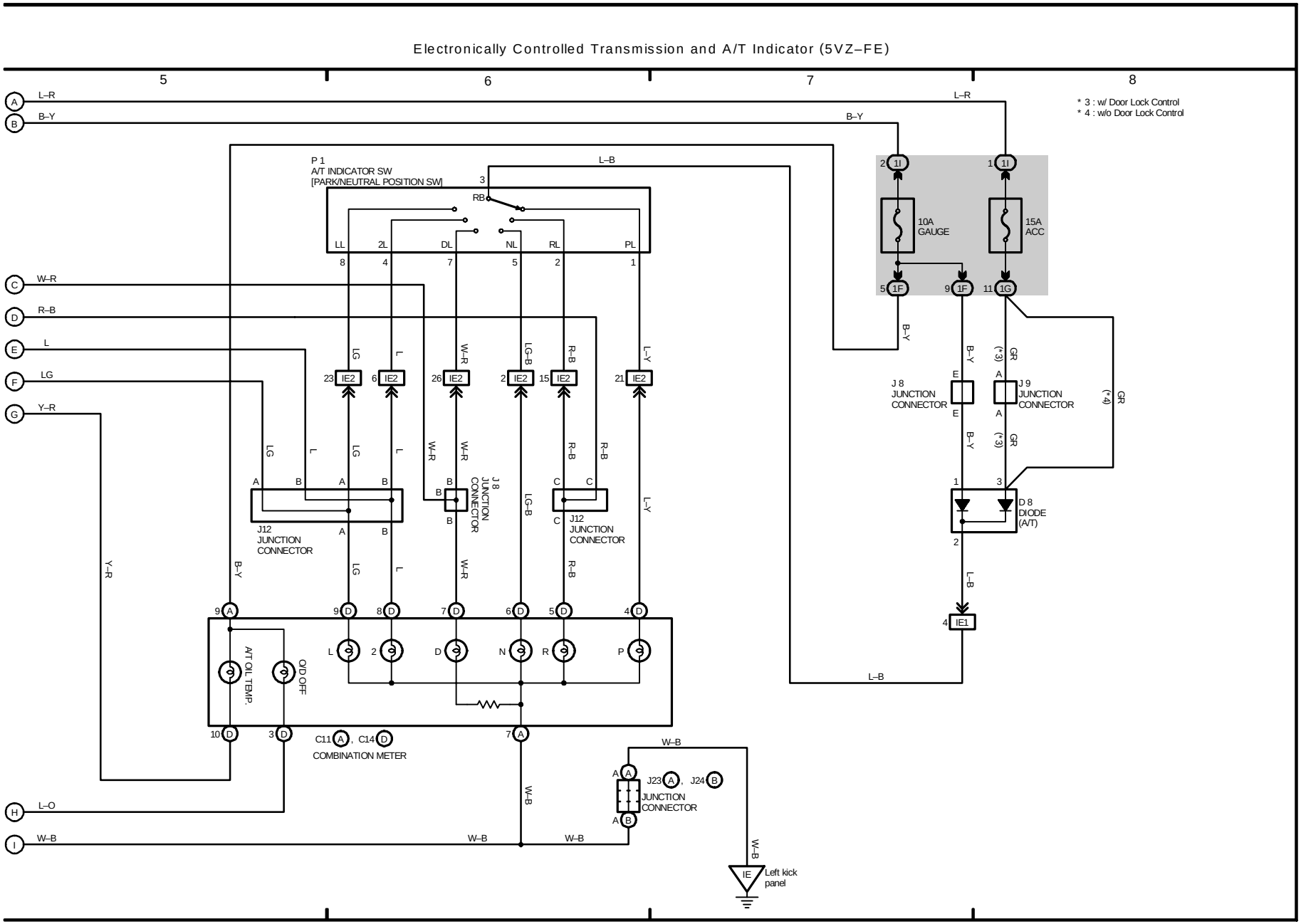
Electronically Controlled Transmission and A/T Indicator (5VZ–FE)
5
6
7
8
* 3 : w/ Door Lock Control
* 4 : w/o Door Lock Control
P 1
A/T INDICATOR SW
[PARK/NEUTRAL POSITION SW]
LL
2L
DL
NL
RL
PL
10A GAUGE
15A ACC
J12 JUNCTION CONNECTOR
J8 JUNCTION CONNECTOR
J9 JUNCTION CONNECTOR
D8 DIODE (A/T)
A/T OIL TEMP.
O/D OFF
C11, C14
COMBINATION METER
J23, J24
JUNCTION CONNECTOR
Left kick panel
L–R
B–Y
L–B
W–R
R–B
L
LG
Y–R
L–O
W–B
L–Y
LG–B
W–R
R–B
GR

M OVERALL ELECTRICAL WIRING DIAGRAM

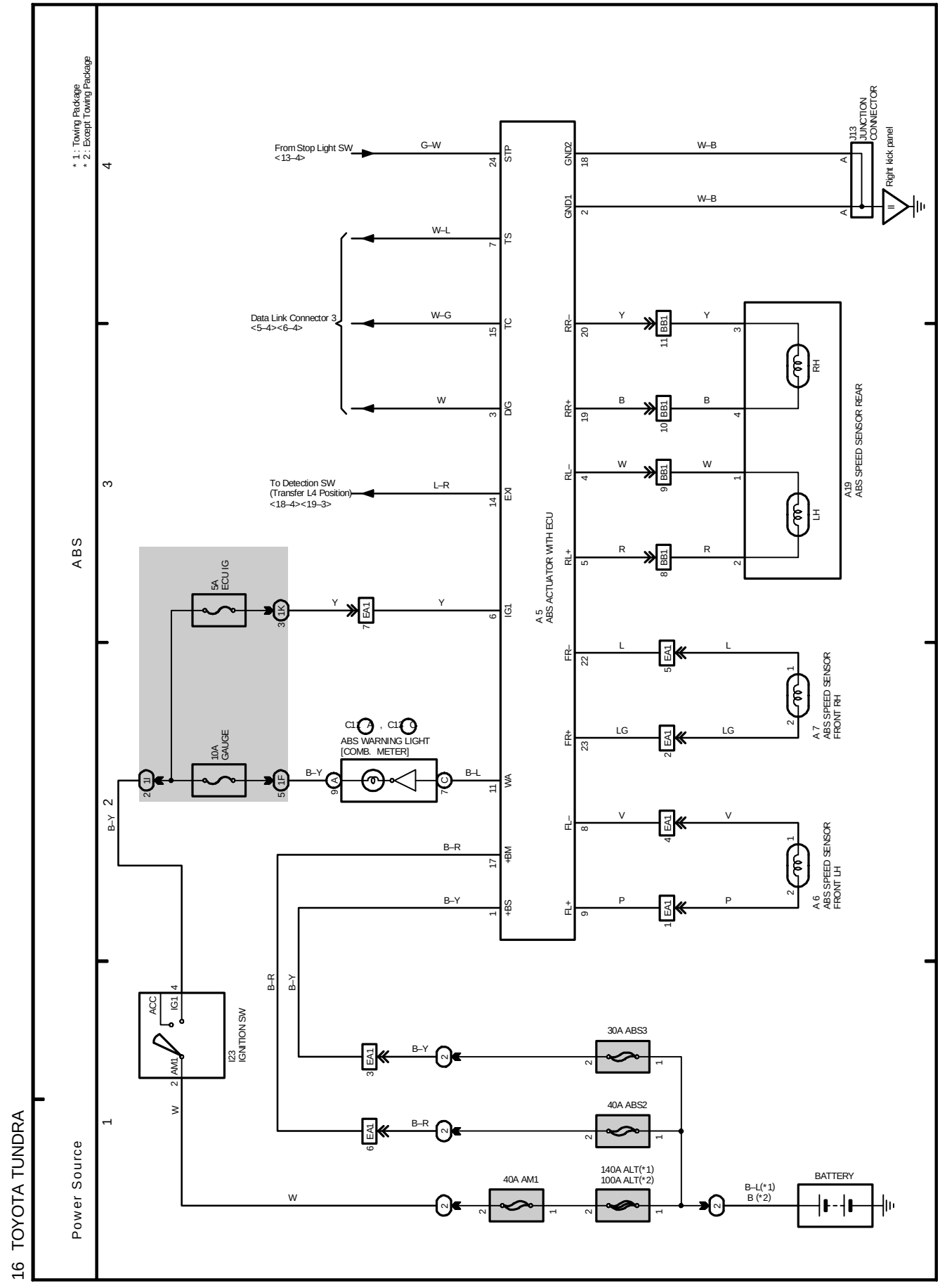

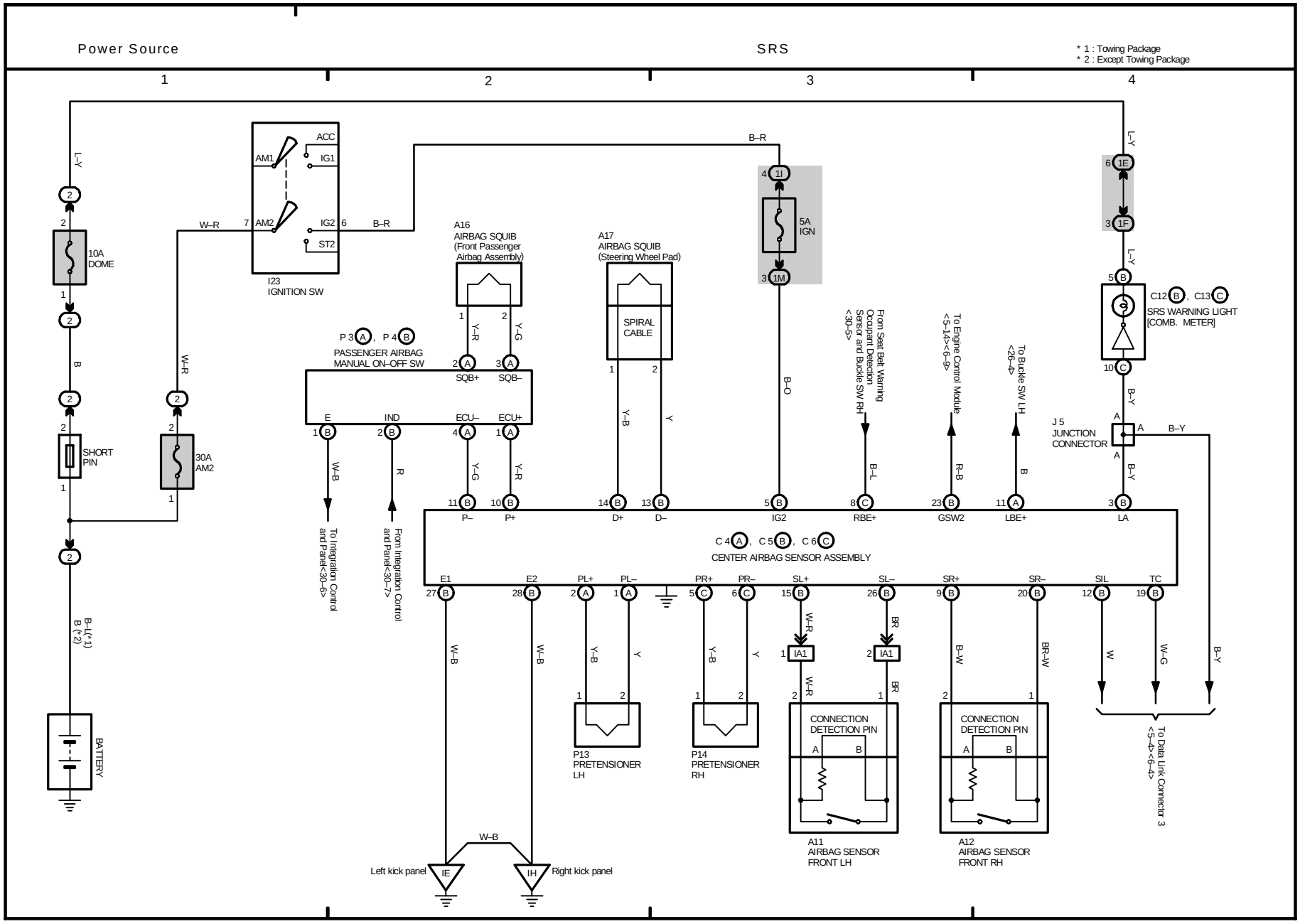
Power Source
SRS
* 1 : Towing Package
* 2 : Except Towing Package
1
2
3
4
L–Y
10A DOME
SHORT PIN
B
W–R
30A AM2
B–L(*1)
B (*2)
BATTERY
ACC
AM1
IG1
AM2
IG2
ST2
I23 IGNITION SW
B–R
5A IGN
A16 AIRBAG SQUIB (Front Passenger Airbag Assembly)
A17 AIRBAG SQUIB (Steering Wheel Pad)
SPIRAL CABLE
P 3 A , P 4 B
PASSENGER AIRBAG MANUAL ON–OFF SW
SQB+
SQB–
E
IND
ECU–
ECU+
W–B
R
Y–R
Y–G
Y–B
Y
B–O
From Seat Belt Warning Occupant Detection Sensor and Buckle SW RH <30–5>
B–L
To Engine Control Module <5–14><6–9>
R–B
To Buckle SW LH <26–4>
B
To Integration Control and Panel<30–6>
From Integration Control and Panel<30–7>
P–
P+
D+
D–
IG2
RBE+
GSW2
LBE+
LA
C 4 A , C 5 B , C 6 C
CENTER AIRBAG SENSOR ASSEMBLY
E1
E2
PL+
PL–
PR+
PR–
SL+
SL–
SR+
SR–
SIL
TC
W–B
Y–B
Y
P13 PRETENSIONER LH
P14 PRETENSIONER RH
W–R
BR
IA1
CONNECTION DETECTION PIN
A11 AIRBAG SENSOR FRONT LH
B–W
BR–W
A12 AIRBAG SENSOR FRONT RH
W
W–G
B–Y
To Data Link Connector 3 <5–4><6–4>
Left kick panel
IE
IH
Right kick panel
1E
1F
1I
1M
C12 B , C13 C
SRS WARNING LIGHT [COMB. METER]
J 5 JUNCTION CONNECTOR

M OVERALL ELECTRICAL WIRING DIAGRAM

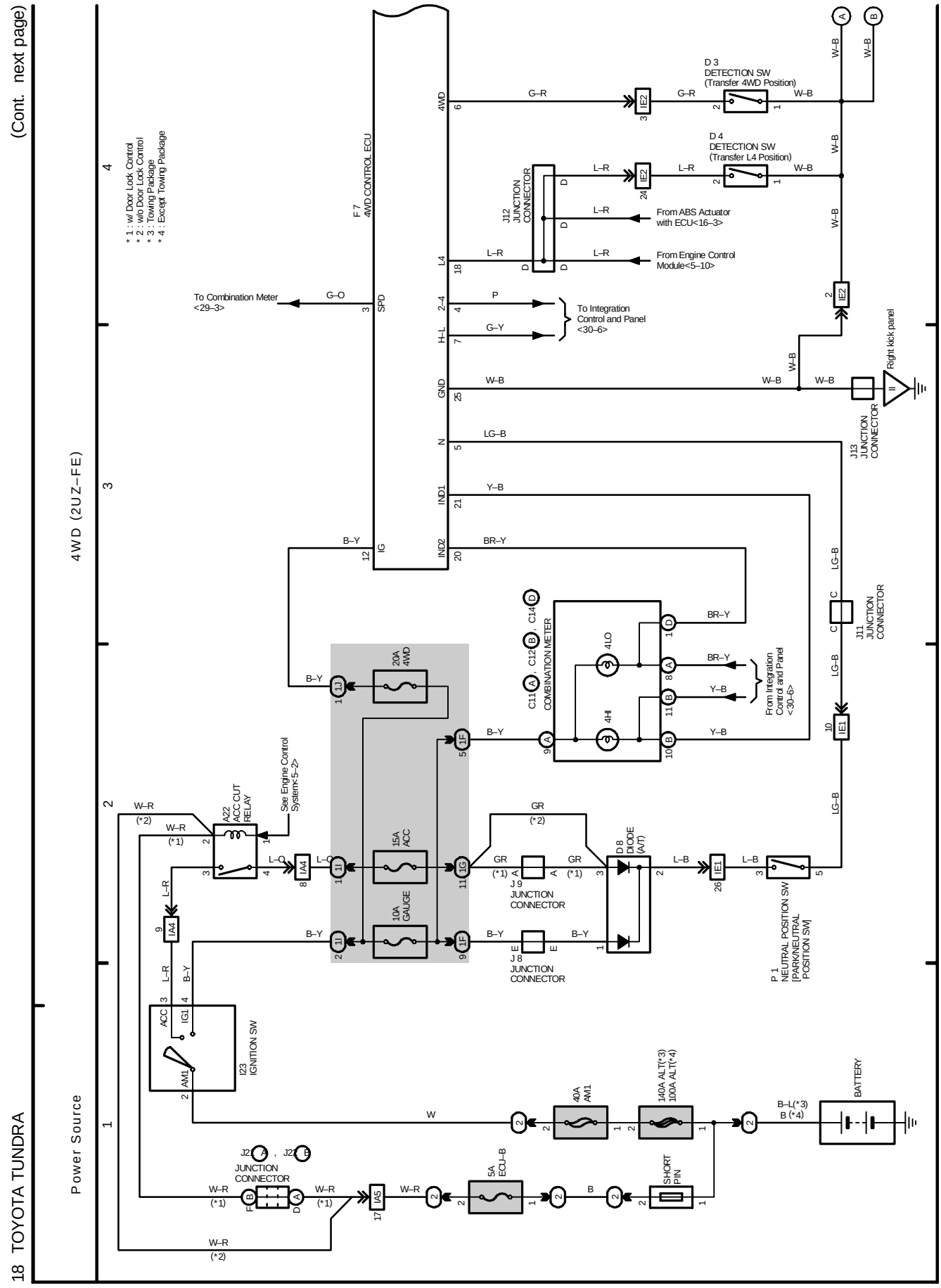

4WD (2UZ–FE)

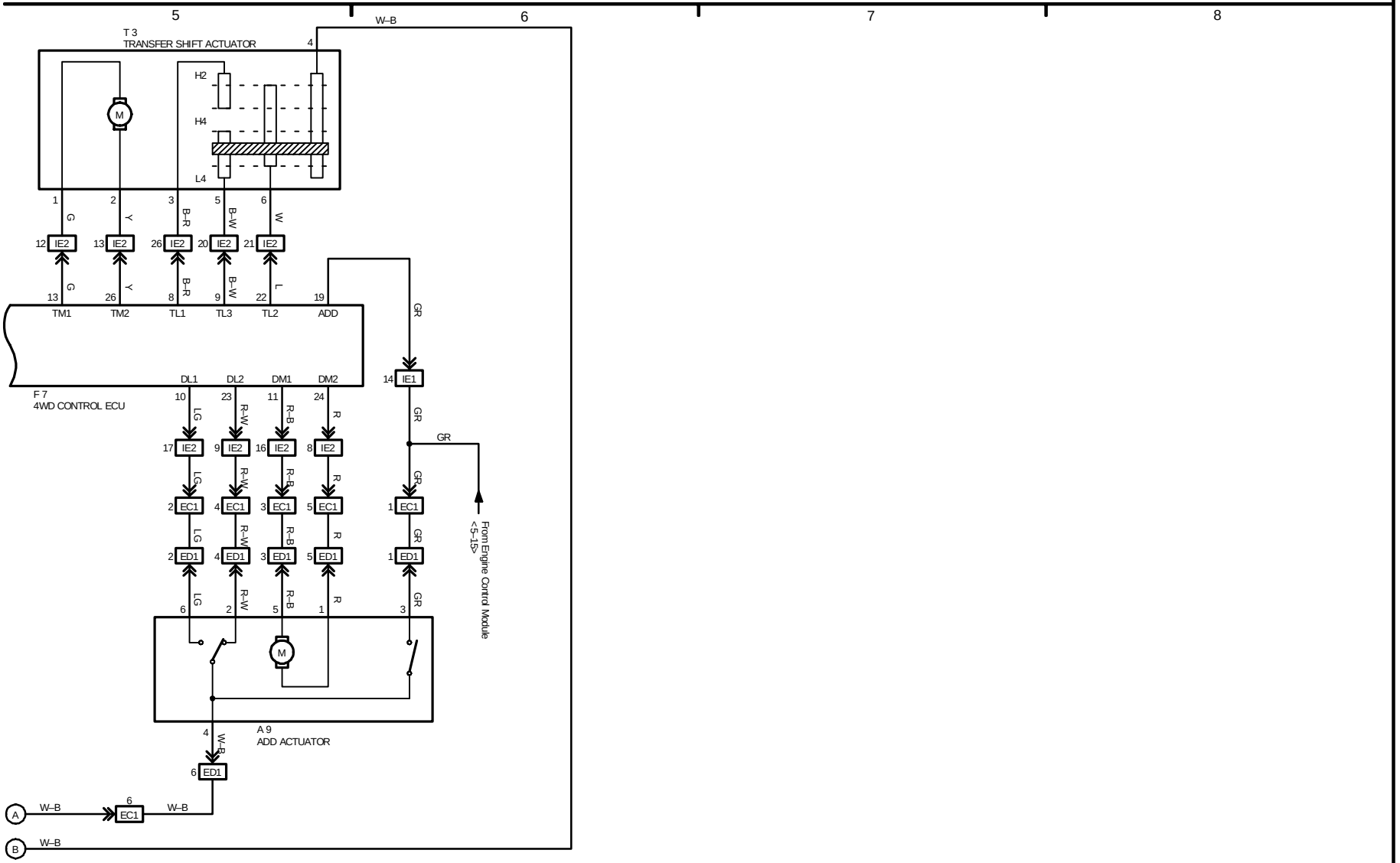
5
6
7
8
W–B
T 3
TRANSFER SHIFT ACTUATOR
4
H2
H4
L4
M
1
2
3
5
6
G
Y
B–R
B–W
W
12 IE2
13 IE2
26 IE2
20 IE2
21 IE2
13
26
8
9
22
19
TM1
TM2
TL1
TL3
TL2
ADD
GR
14 IE1
F 7
4WD CONTROL ECU
DL1
DL2
DM1
DM2
10
23
11
24
LG
R–W
R–B
R
17 IE2
9 IE2
16 IE2
8 IE2
2 EC1
4 EC1
3 EC1
5 EC1
1 EC1
2 ED1
4 ED1
3 ED1
5 ED1
1 ED1
6
2
5
1
3
From Engine Control Module
<5–15>
A 9
ADD ACTUATOR
4
6 ED1
A
B
6 EC1

M OVERALL ELECTRICAL WIRING DIAGRAM

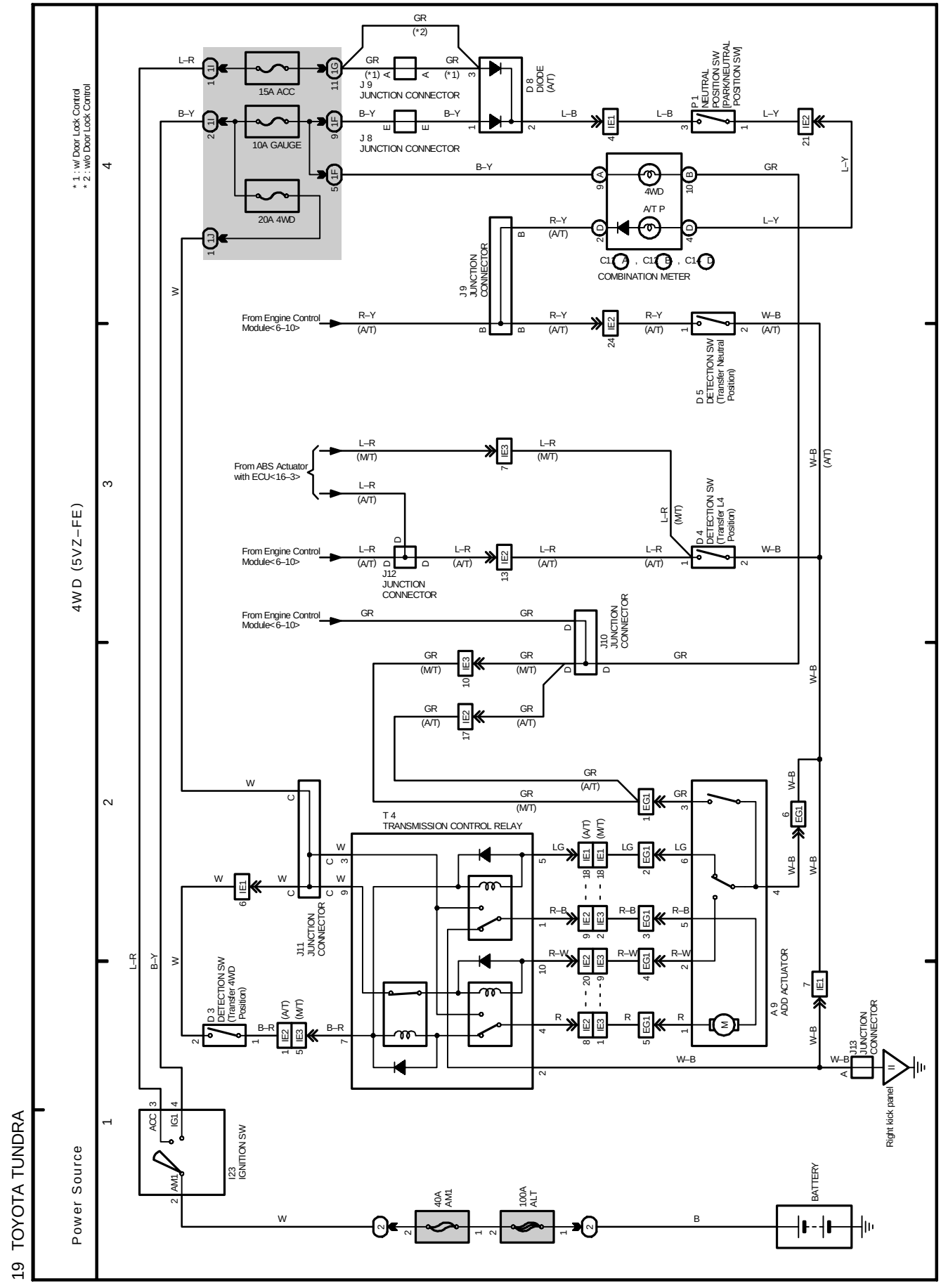

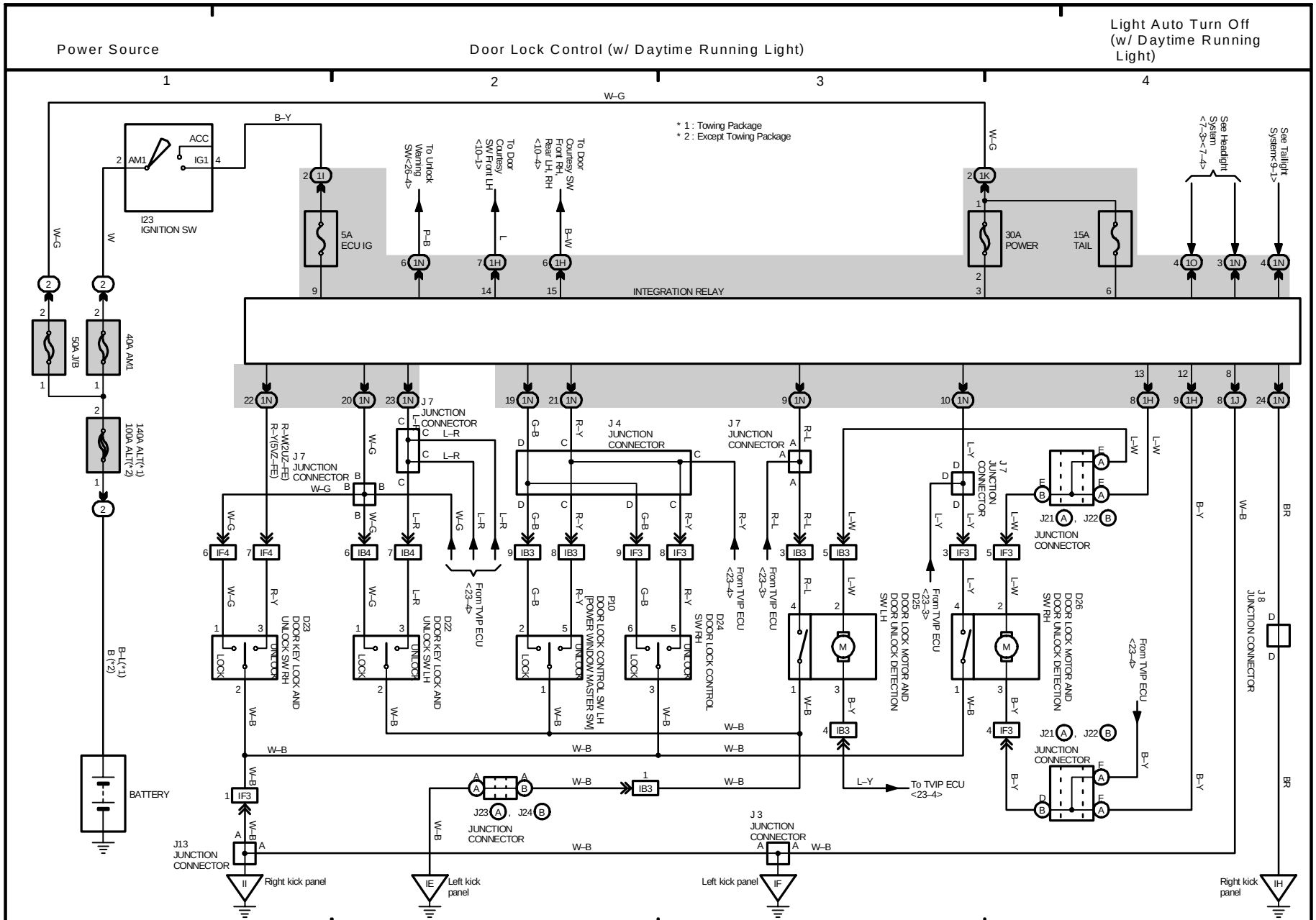
Power Source
Door Lock Control (w/ Daytime Running Light)
Light Auto Turn Off (w/ Daytime Running Light)
1
2
3
4
* 1 : Towing Package
* 2 : Except Towing Package
I23 IGNITION SW
ACC
AM1
IG1
5A ECU IG
30A POWER
15A TAIL
INTEGRATION RELAY
50A J/B
40A AM1
140A ALT(*1)
100A ALT(*2)
BATTERY
J 7 JUNCTION CONNECTOR
J 4 JUNCTION CONNECTOR
J 8 JUNCTION CONNECTOR
J 3 JUNCTION CONNECTOR
J13 JUNCTION CONNECTOR
J21, J22 JUNCTION CONNECTOR
J23, J24 JUNCTION CONNECTOR
D22 DOOR KEY LOCK AND UNLOCK SW LH
D23 DOOR KEY LOCK AND UNLOCK SW RH
D24 DOOR LOCK CONTROL SW RH
P10 DOOR LOCK CONTROL SW LH [POWER WINDOW MASTER SW]
D25 DOOR LOCK MOTOR AND DOOR UNLOCK DETECTION SW LH
D26 DOOR LOCK MOTOR AND DOOR UNLOCK DETECTION SW RH
To Unlock Warning SW<26-4>
To Door Courtesy SW Front LH <10-1>
To Door Courtesy SW Front RH, Rear LH, RH <10-4>
See Headlight System <7-3><7-4>
See Taillight System<9-1>
From TVIP ECU <23-3>
From TVIP ECU <23-4>
To TVIP ECU <23-4>
Right kick panel
Left kick panel
Left kick panel
Right kick panel
W-G
B-Y
W
P-B
L
B-W
R-W(2UZ-FE)
R-Y(5VZ-FE)
W-B
G-B
R-Y
R-L
L-W
L-Y
L-R
BR

M OVERALL ELECTRICAL WIRING DIAGRAM

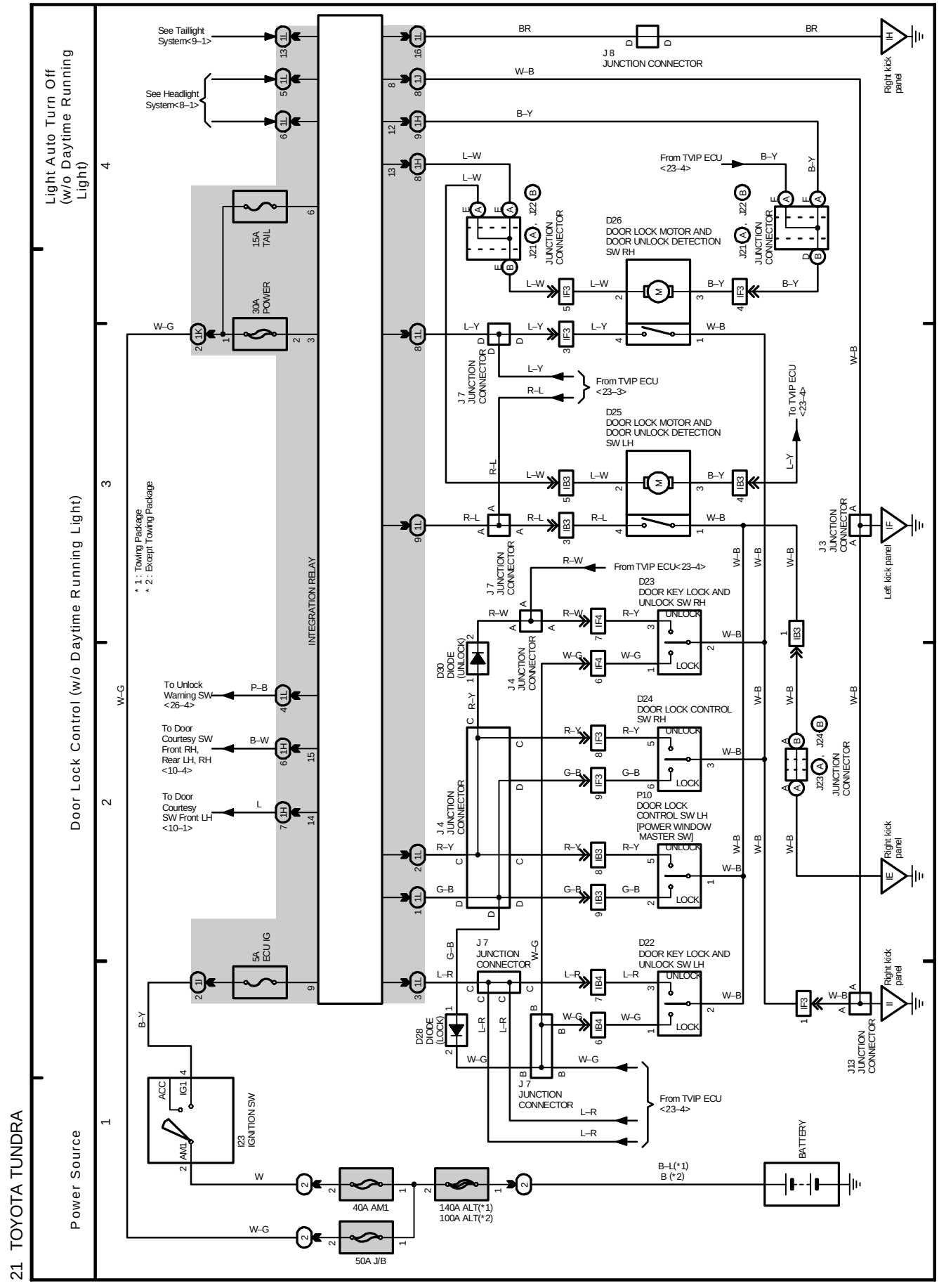

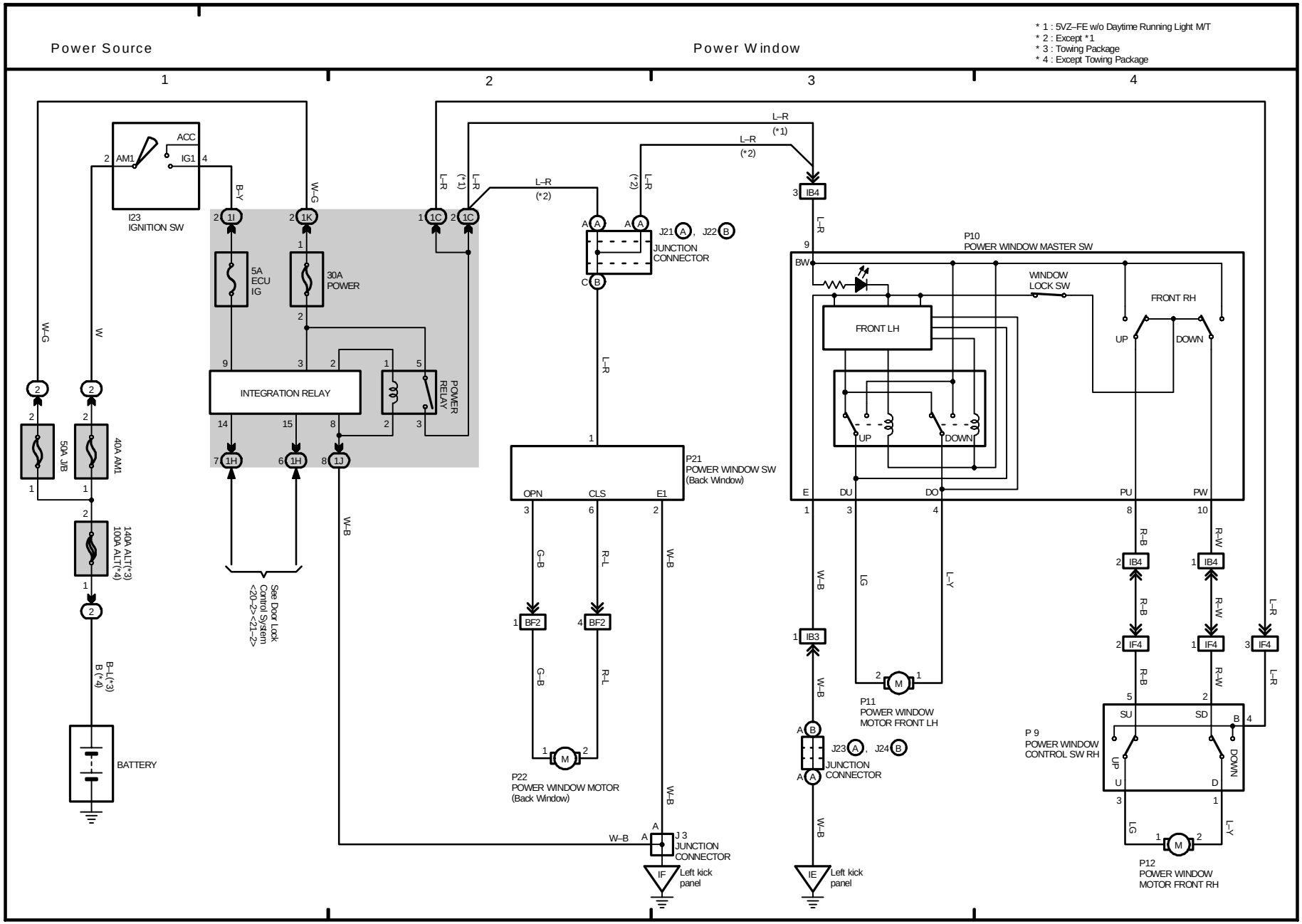
Power Source
Power Window
* 1 : 5VZ–FE w/o Daytime Running Light M/T
* 2 : Except *1
* 3 : Towing Package
* 4 : Except Towing Package
1
2
3
4
ACC
IG1
AM1
I23
IGNITION SW
B–Y
W–G
W
5A
ECU
IG
30A
POWER
INTEGRATION RELAY
POWER
RELAY
50A J/B
40A AM1
140A ALT(*3)
100A ALT(*4)
B–L(*3)
B (*4)
BATTERY
See Door Lock
Control System
<20–2> <21–2>
L–R
(*1)
L–R
(*2)
JUNCTION
CONNECTOR
J21
J22
P21
POWER WINDOW SW
(Back Window)
OPN
CLS
E1
G–B
R–L
W–B
BF2
P22
POWER WINDOW MOTOR
(Back Window)
J 3
JUNCTION
CONNECTOR
Left kick
panel
IF
IB4
P10
POWER WINDOW MASTER SW
BW
WINDOW
LOCK SW
FRONT LH
FRONT RH
UP
DOWN
E
DU
DO
PU
PW
LG
L–Y
IB3
P11
POWER WINDOW
MOTOR FRONT LH
J23
J24
IE
R–B
R–W
IF4
P 9
POWER WINDOW
CONTROL SW RH
SU
SD
U
D
P12
POWER WINDOW
MOTOR FRONT RH

M OVERALL ELECTRICAL WIRING DIAGRAM

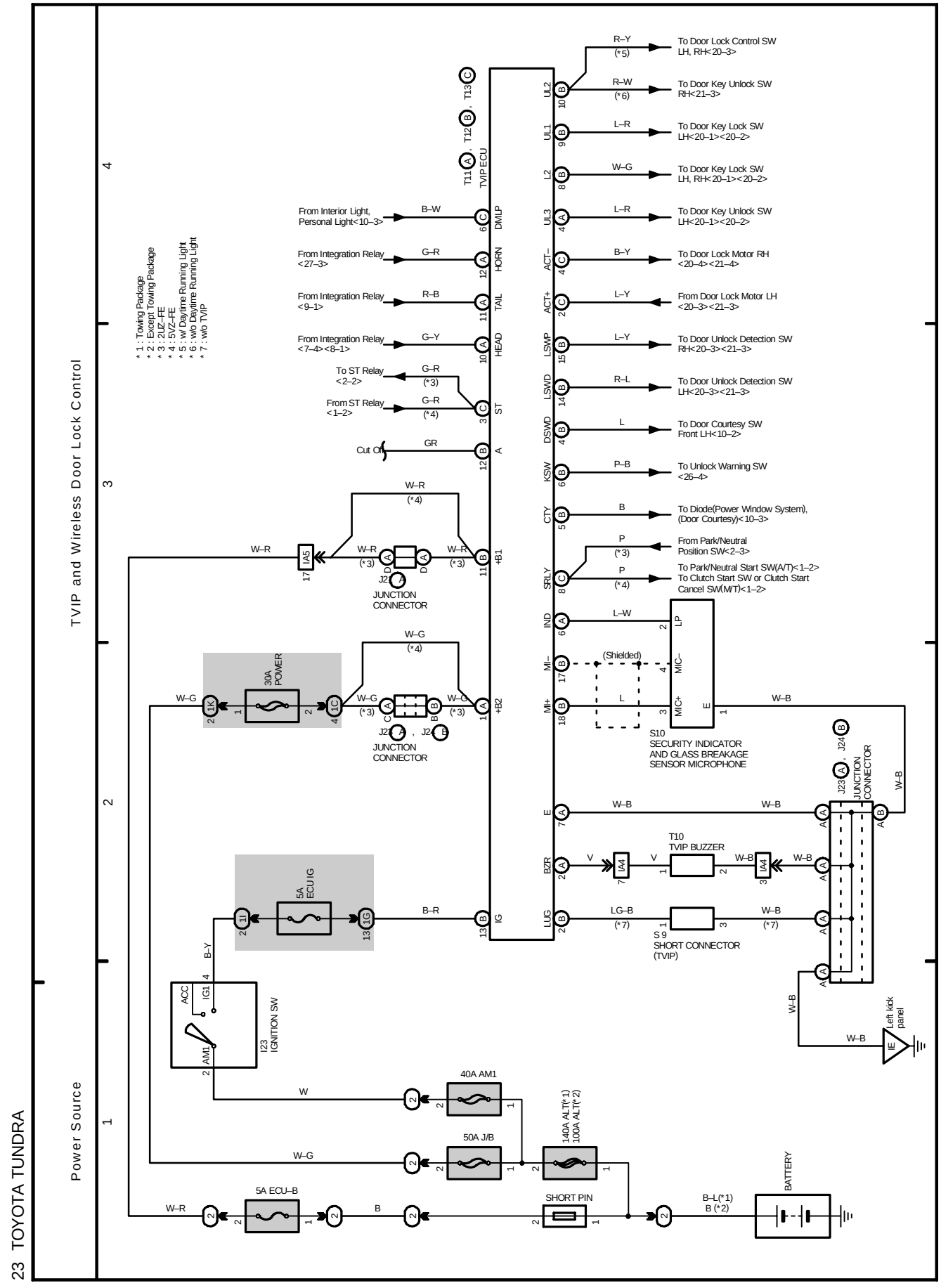

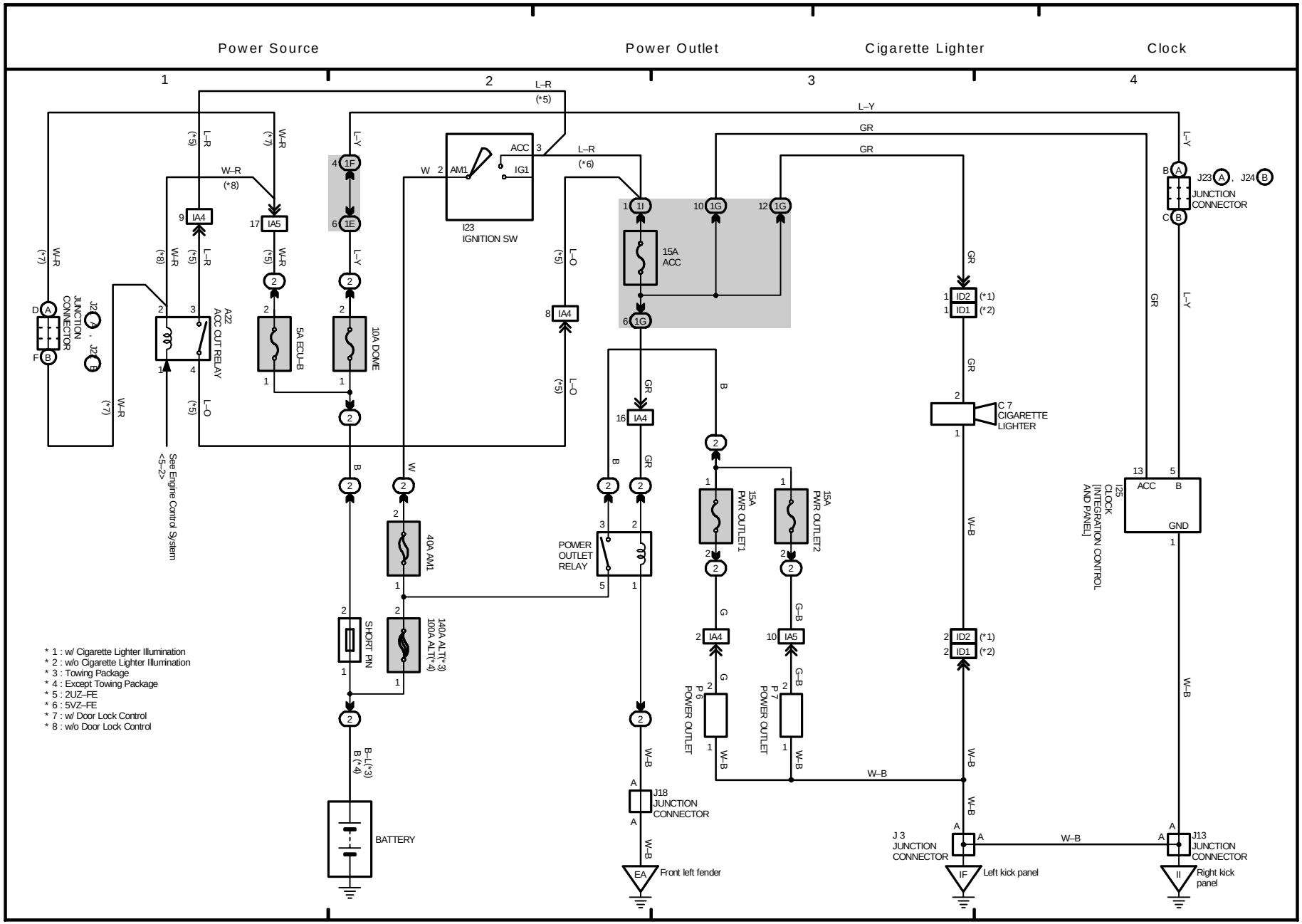
Power Source
Power Outlet
Cigarette Lighter
Clock
1
2
3
4
L–R (*5)
L–Y
GR
W–R (*8)
L–R (*6)
W–B
B
G
G–B
W
L–O
W–R
L–R
L–Y
(*5)
(*7)
(*8)
ACC
IG1
AM1
I23 IGNITION SW
15A ACC
A22 ACC CUT RELAY
5A ECU–B
10A DOME
40A AM1
140A ALT(*3) 100A ALT(*4)
SHORT PIN
POWER OUTLET RELAY
15A PWR OUTLET1
15A PWR OUTLET2
P 6 POWER OUTLET
P 7 POWER OUTLET
C 7 CIGARETTE LIGHTER
I25 CLOCK [INTEGRATION CONTROL AND PANEL]
ACC
GND
JUNCTION CONNECTOR
J18 JUNCTION CONNECTOR
J 3 JUNCTION CONNECTOR
J13 JUNCTION CONNECTOR
BATTERY
See Engine Control System <5–2>
Front left fender
Left kick panel
Right kick panel
* 1 : w/ Cigarette Lighter Illumination
* 2 : w/o Cigarette Lighter Illumination
* 3 : Towing Package
* 4 : Except Towing Package
* 5 : 2UZ–FE
* 6 : 5VZ–FE
* 7 : w/ Door Lock Control
* 8 : w/o Door Lock Control

M OVERALL ELECTRICAL WIRING DIAGRAM

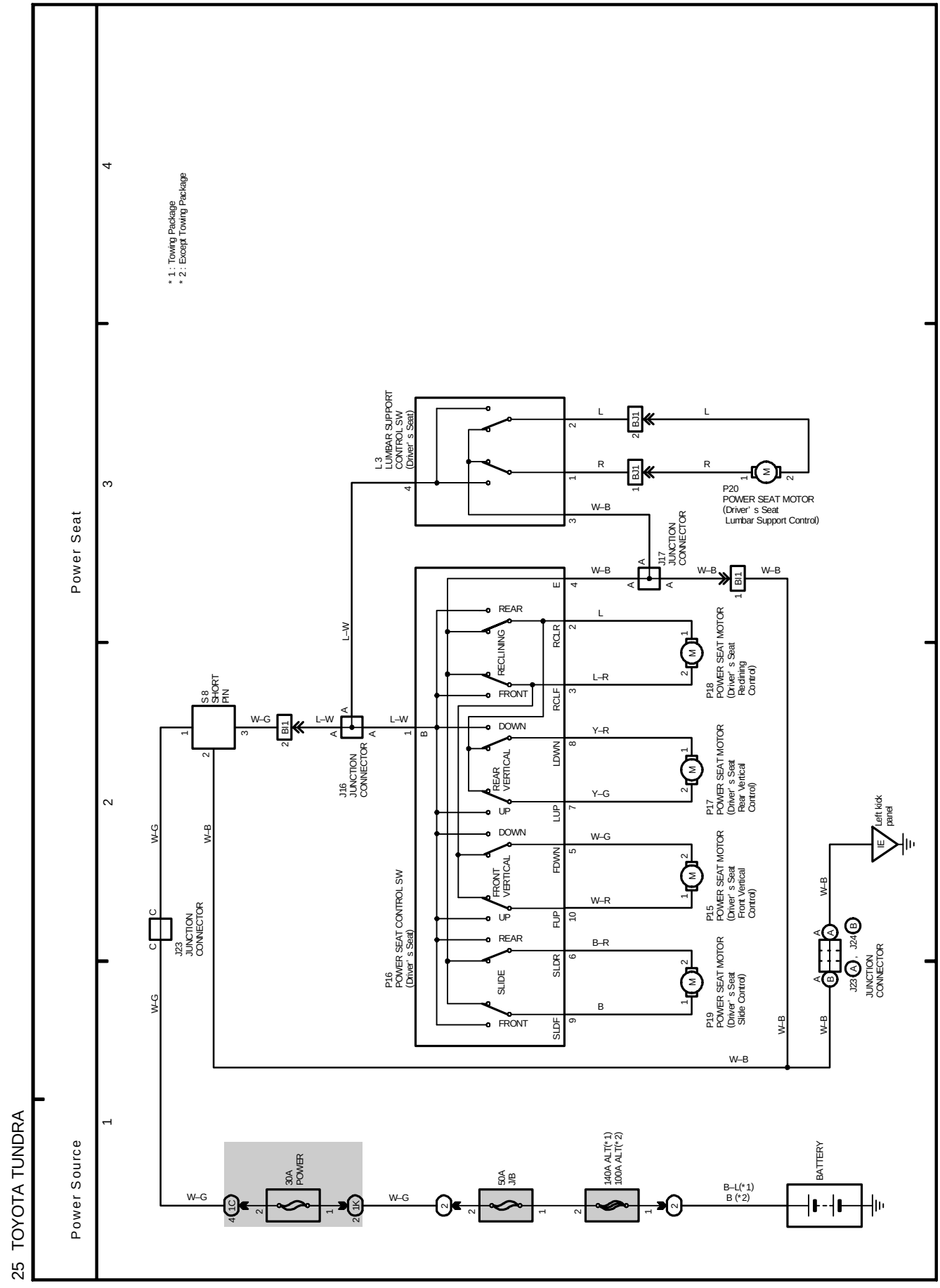

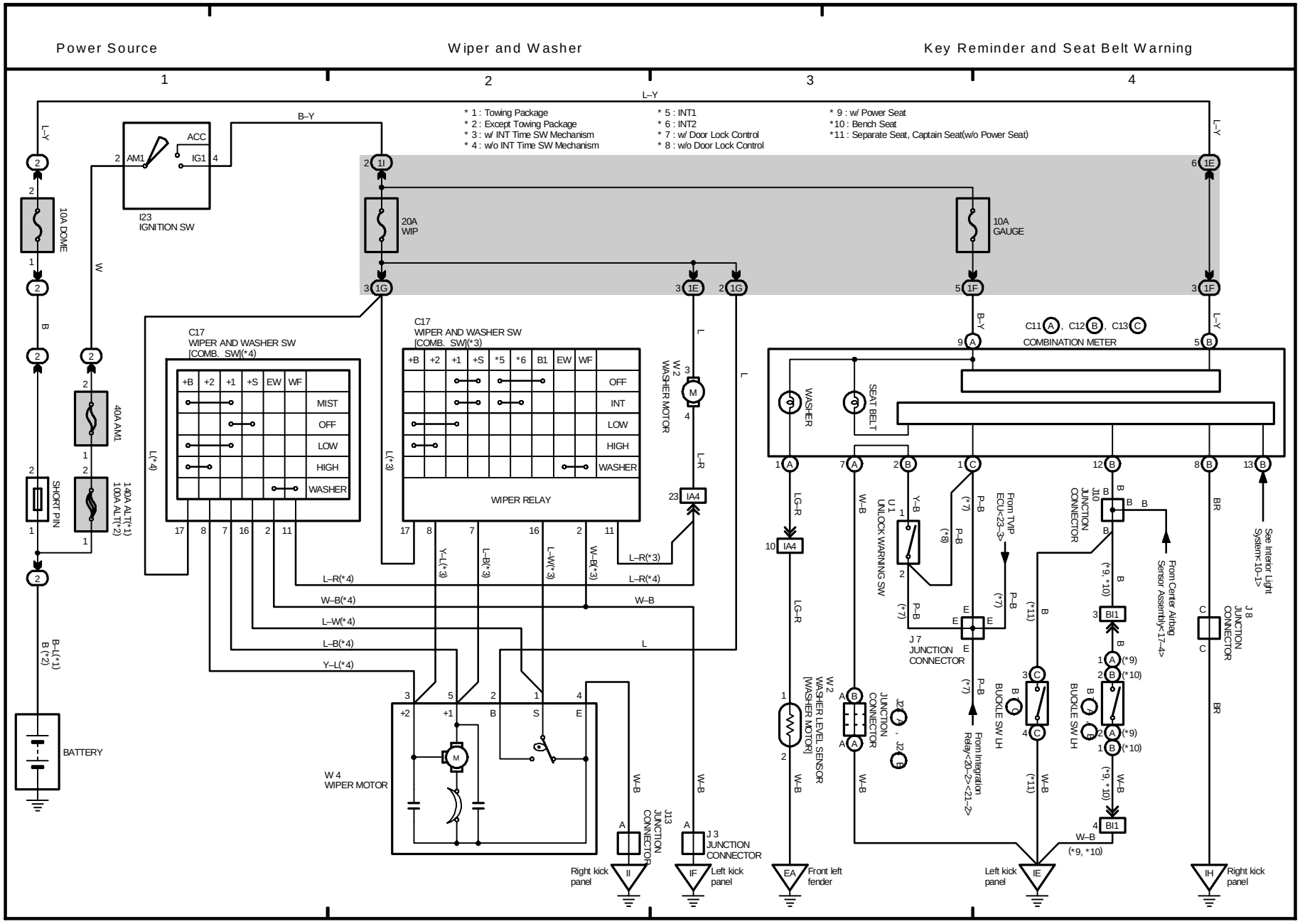
Power Source
Wiper and Washer
Key Reminder and Seat Belt Warning
1
2
3
4
L–Y
* 1 : Towing Package
* 2 : Except Towing Package
* 3 : w/ INT Time SW Mechanism
* 4 : w/o INT Time SW Mechanism
* 5 : INT1
* 6 : INT2
* 7 : w/ Door Lock Control
* 8 : w/o Door Lock Control
* 9 : w/ Power Seat
*10 : Bench Seat
*11 : Separate Seat, Captain Seat(w/o Power Seat)
10A DOME
ACC
IG1
AM1
I23
IGNITION SW
20A
WIP
10A
GAUGE
C11 A , C12 B , C13 C
COMBINATION METER
C17
WIPER AND WASHER SW
[COMB. SW](*4)
C17
WIPER AND WASHER SW
[COMB. SW](*3)
+B +2 +1 +S EW WF
MIST
OFF
LOW
HIGH
WASHER
+B +2 +1 +S *5 *6 B1 EW WF
OFF
INT
LOW
HIGH
WASHER
WIPER RELAY
W 2
WASHER MOTOR
WASHER
SEAT BELT
40A AM1
140A ALT(*1)
100A ALT(*2)
SHORT PIN
BATTERY
B–L(*1)
B (*2)
W 4
WIPER MOTOR
J13
JUNCTION
CONNECTOR
J 3
JUNCTION
CONNECTOR
Right kick
panel
Left kick
panel
Front left
fender
Left kick
panel
Right kick
panel
W 2
WASHER LEVEL SENSOR
[WASHER MOTOR]
J2
JUNCTION
CONNECTOR
U 1
UNLOCK WARNING SW
J 7
JUNCTION
CONNECTOR
From TVIP
ECU<23–3>
From Integration
Relay<20–2><21–2>
BUCKLE SW LH
BUCKLE SW LH
J10
JUNCTION
CONNECTOR
From Center Airbag
Sensor Assembly<17–4>
J 8
JUNCTION
CONNECTOR
See Interior Light
System<10–1>
L–R(*4)
W–B(*4)
L–W(*4)
L–B(*4)
Y–L(*4)
L–R(*3)
W–B
L
Y–L(*3)
L–B(*3)
L–W(*3)
W–B(*3)
L–R(*3)

M OVERALL ELECTRICAL WIRING DIAGRAM

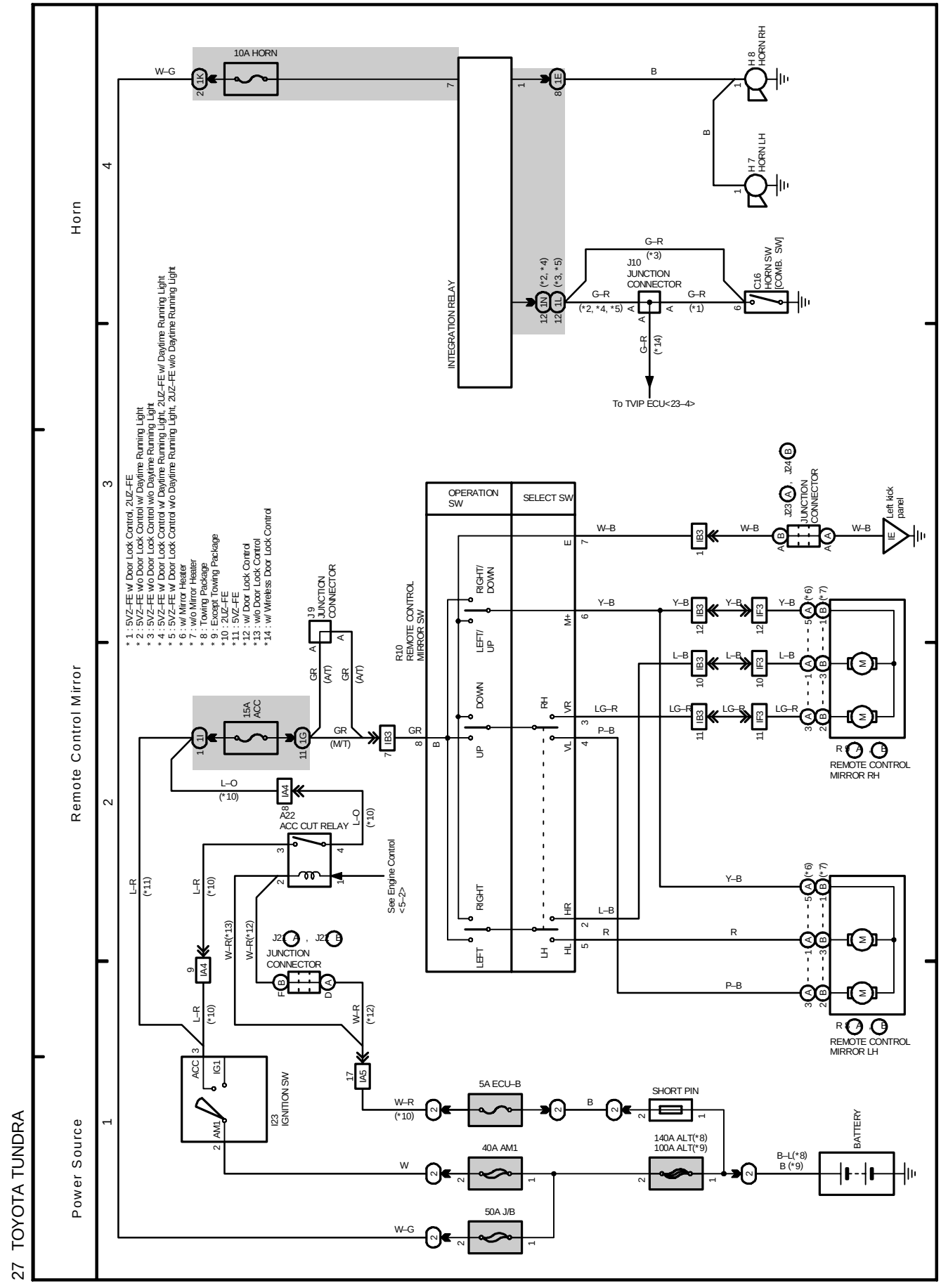

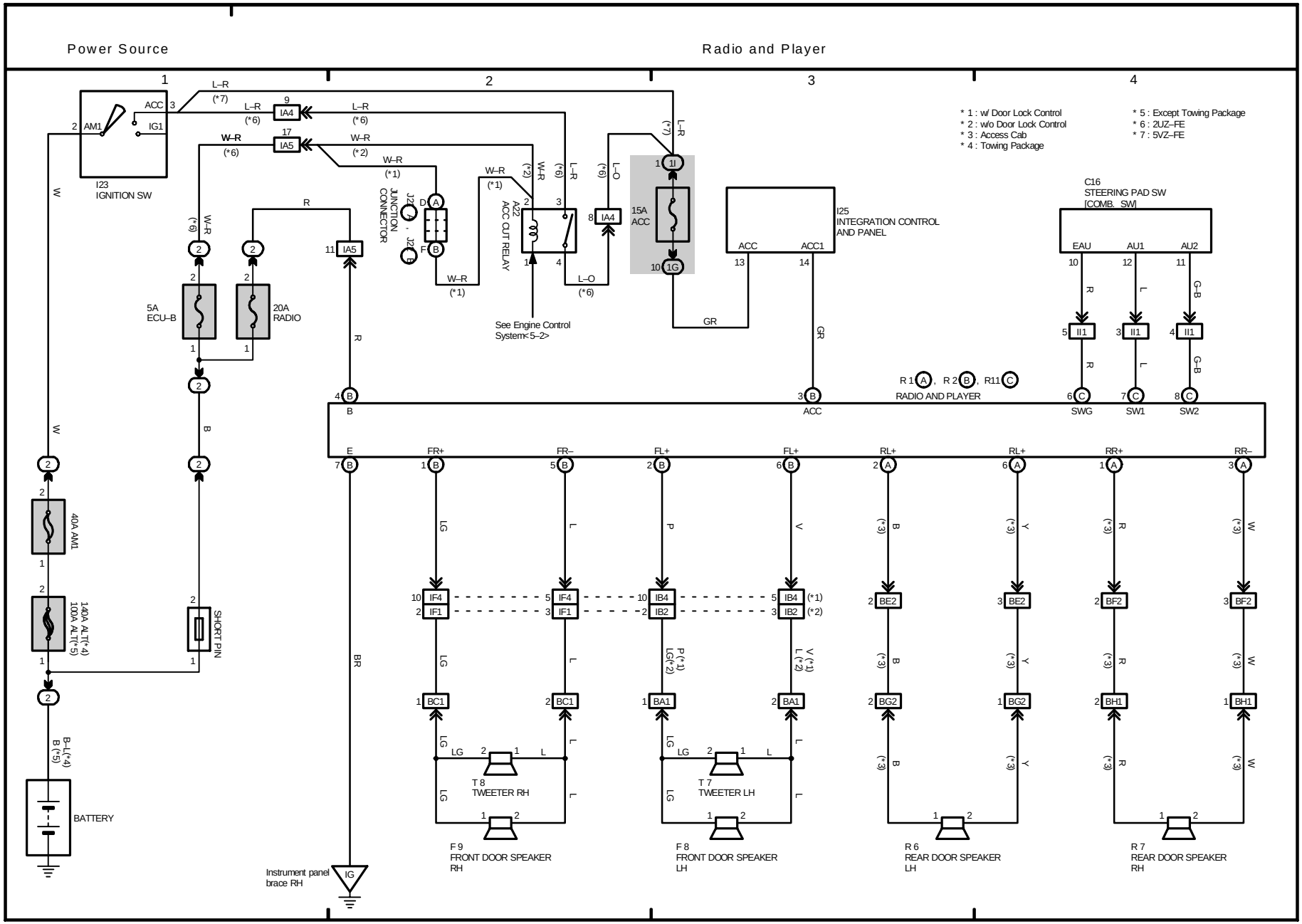
Power Source
Radio and Player
1
2
3
4
* 1 : w/ Door Lock Control
* 2 : w/o Door Lock Control
* 3 : Access Cab
* 4 : Towing Package
* 5 : Except Towing Package
* 6 : 2UZ–FE
* 7 : 5VZ–FE
I23
IGNITION SW
ACC
IG1
AM1
IA4
IA5
I1
1G
15A
ACC
5A
ECU–B
20A
RADIO
40A AM1
140A ALT(*4)
100A ALT(*5)
SHORT PIN
BATTERY
B–L(*4)
B (*5)
JUNCTION
CONNECTOR
J22
J23
A22
ACC CUT RELAY
See Engine Control
System<5–2>
I25
INTEGRATION CONTROL
AND PANEL
ACC
ACC1
C16
STEERING PAD SW
[COMB. SW]
EAU
AU1
AU2
SWG
SW1
SW2
R 1 (A), R 2 (B), R11 (C)
RADIO AND PLAYER
E
FR+
FR–
FL+
FL+
RL+
RL+
RR+
RR–
IF4
IF1
IB4
IB2
BC1
BA1
BE2
BG2
BF2
BH1
T 8
TWEETER RH
T 7
TWEETER LH
F 9
FRONT DOOR SPEAKER
RH
F 8
FRONT DOOR SPEAKER
LH
R 6
REAR DOOR SPEAKER
LH
R 7
REAR DOOR SPEAKER
RH
Instrument panel
brace RH
IG
W
R
B
BR
L–R
W–R
L–O
GR
LG
L
P
V
Y
G–B

M OVERALL ELECTRICAL WIRING DIAGRAM

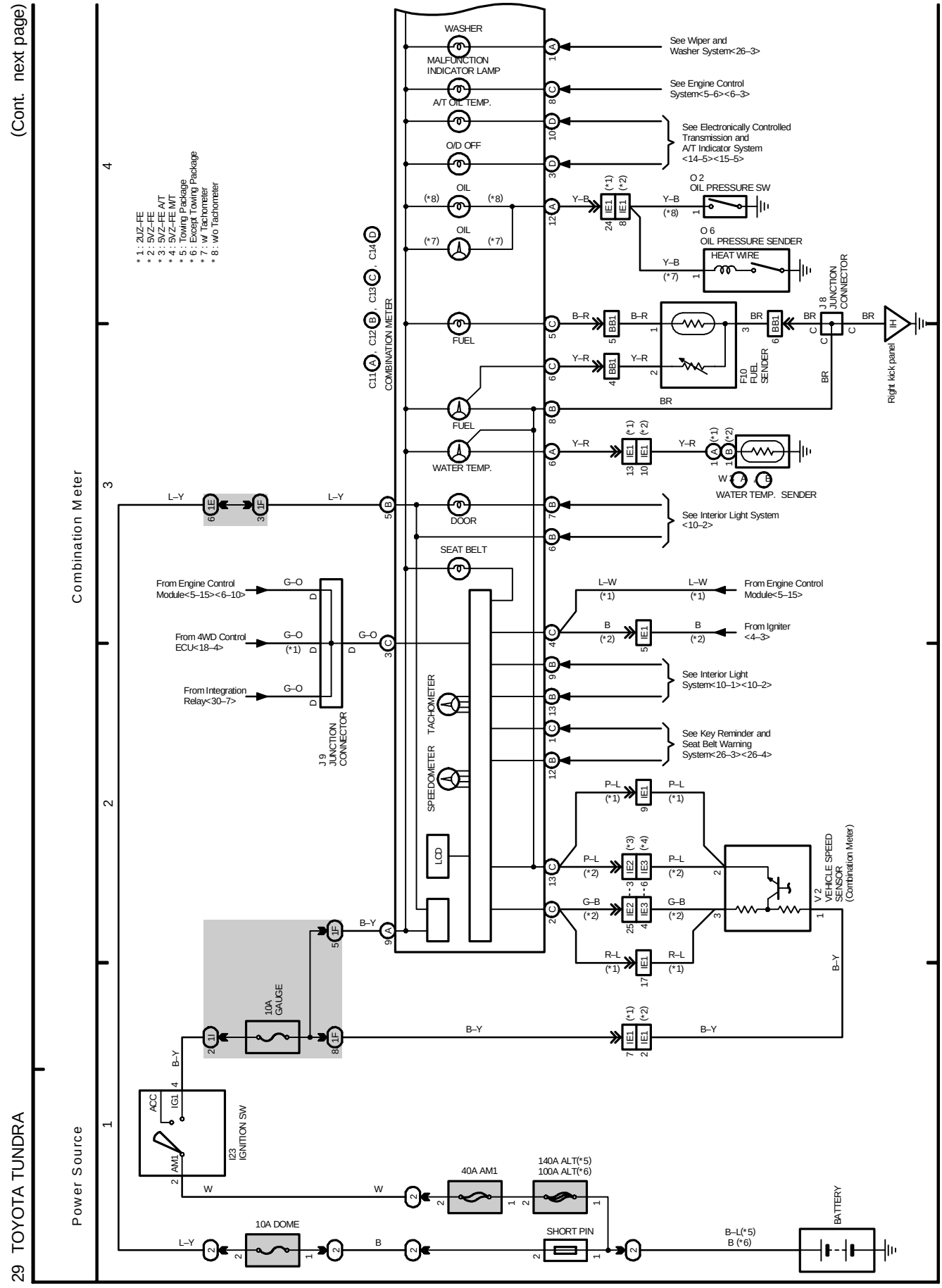

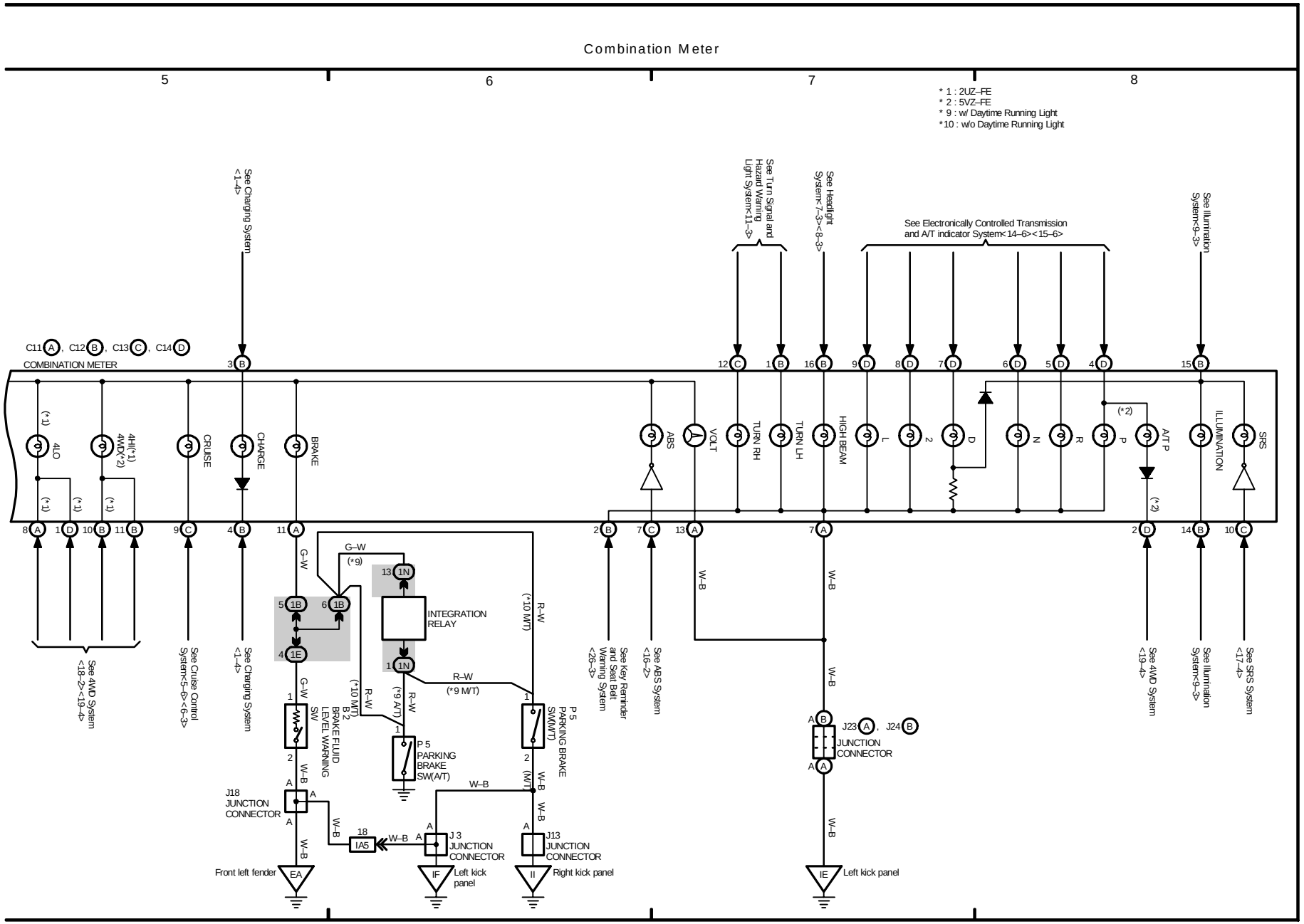
Combination Meter
5
6
7
8
* 1 : 2UZ–FE
* 2 : 5VZ–FE
* 9 : w/ Daytime Running Light
*10 : w/o Daytime Running Light
See Charging System <1–4>
See Turn Signal and Hazard Warning Light System<11–3>
See Headlight System<7–3><8–3>
See Electronically Controlled Transmission and A/T indicator System<14–6><15–6>
See Illumination System<9–3>
C11 A , C12 B , C13 C , C14 D
COMBINATION METER
4LO
4HI(*1) 4WD(*2)
CRUISE
CHARGE
BRAKE
ABS
VOLT
TURN RH
TURN LH
HIGH BEAM
L
2
D
N
R
P
A/T P
ILLUMINATION
SRS
(*1)
(*2)
INTEGRATION RELAY
G–W
R–W
W–B
(*9)
(*10 M/T)
(*9 A/T)
(*9 M/T)
P 5 PARKING BRAKE SW(A/T)
P 5 PARKING BRAKE SW(M/T)
BRAKE FLUID LEVEL WARNING SW
B 2
J18 JUNCTION CONNECTOR
J 3 JUNCTION CONNECTOR
J13 JUNCTION CONNECTOR
J23 A , J24 B
JUNCTION CONNECTOR
IA5
Front left fender
EA
IF
Left kick panel
II
Right kick panel
IE
Left kick panel
See 4WD System <18–2><19–4>
See Cruise Control System<5–6><6–3>
See Charging System <1–4>
See Key Reminder and Seat Belt Warning System <26–3>
See ABS System <16–2>
See 4WD System <19–4>
See Illumination System<9–3>
See SRS System <17–4>

M OVERALL ELECTRICAL WIRING DIAGRAM

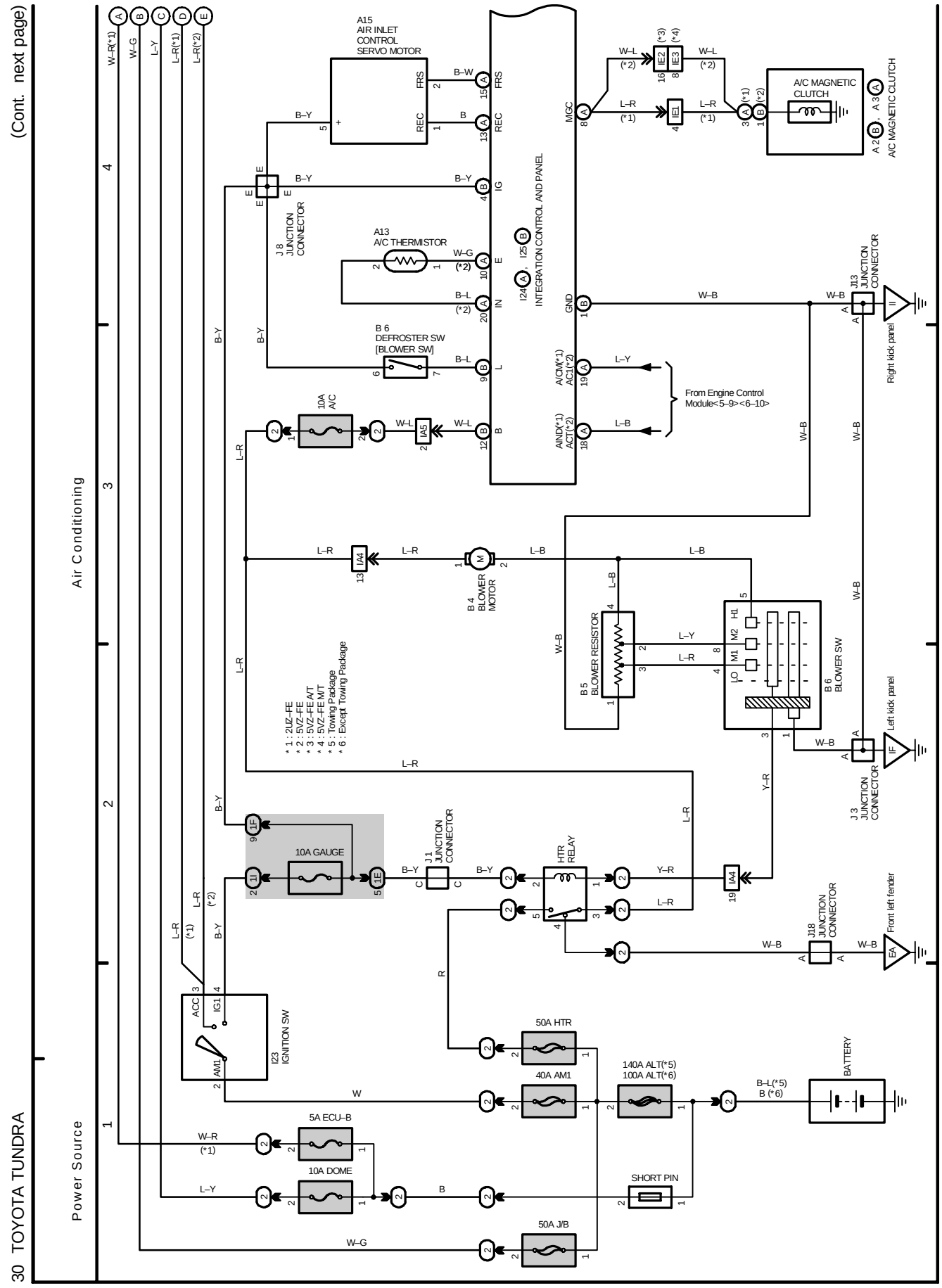

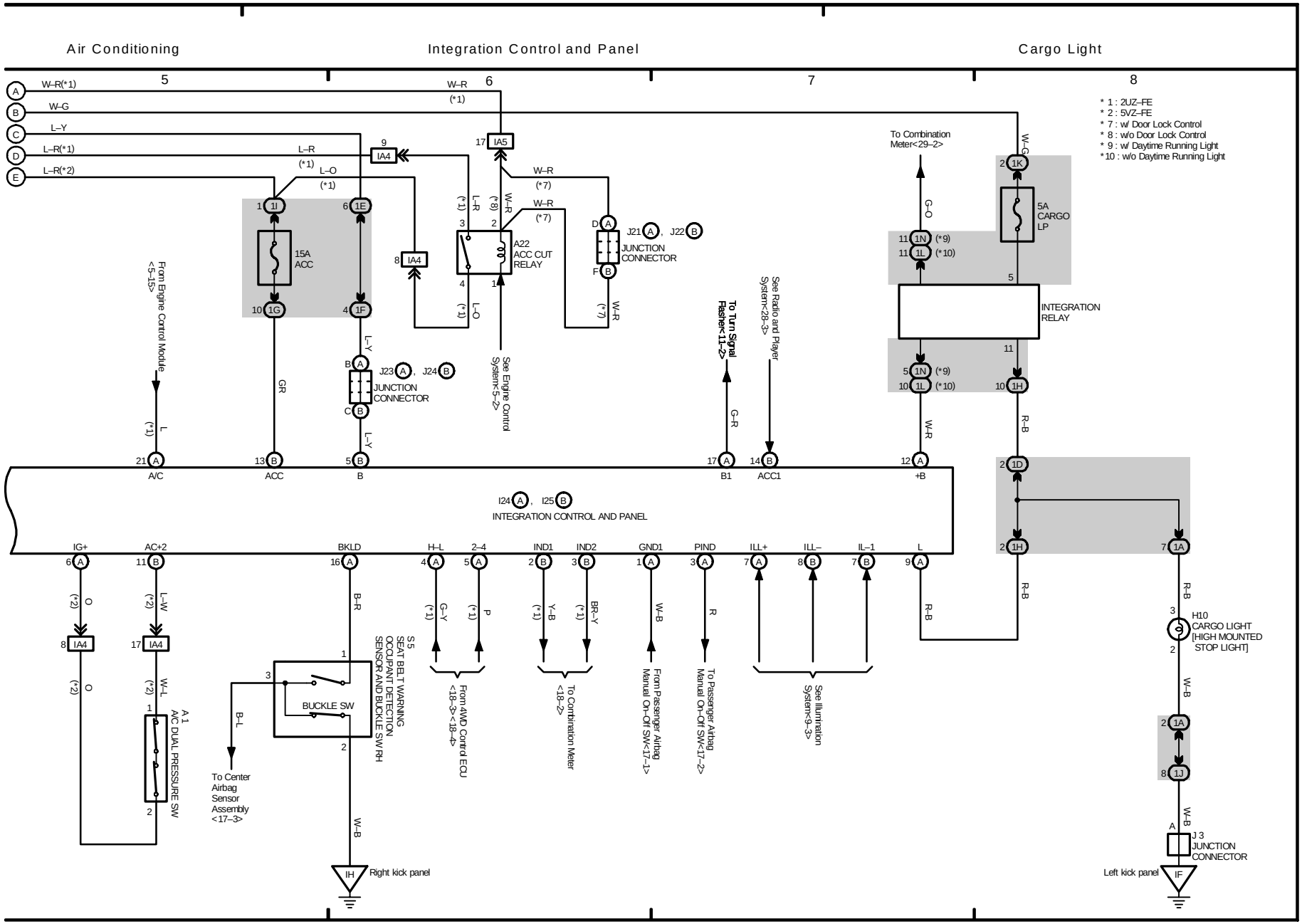
Air Conditioning
Integration Control and Panel
Cargo Light
5
6
7
8
* 1 : 2UZ–FE
* 2 : 5VZ–FE
* 7 : w/ Door Lock Control
* 8 : w/o Door Lock Control
* 9 : w/ Daytime Running Light
*10 : w/o Daytime Running Light
W–R(*1)
W–G
L–Y
L–R(*1)
L–R(*2)
W–R
(*1)
L–R
(*1)
L–O
(*1)
W–R
(*7)
W–R
(*7)
W–G
To Combination Meter<29–2>
G–O
5A CARGO LP
INTEGRATION RELAY
15A ACC
A22 ACC CUT RELAY
JUNCTION CONNECTOR
JUNCTION CONNECTOR
From Engine Control Module <5–15>
See Engine Control System<5–2>
To Turn Signal Flasher<11–2>
See Radio and Player System<28–3>
G–R
W–R
R–B
L
(*1)
GR
L–Y
L–Y
A/C
ACC
B
B1
ACC1
+B
I24 A , I25 B
INTEGRATION CONTROL AND PANEL
IG+
AC+2
BKLD
H–L
2–4
IND1
IND2
GND1
PIND
ILL+
ILL–
IL–1
L
O
(*2)
L–W
(*2)
B–R
G–Y
(*1)
P
(*1)
Y–B
(*1)
BR–Y
(*1)
W–B
R
R–B
R–B
R–B
W–L
(*2)
O
(*2)
A1 A/C DUAL PRESSURE SW
BUCKLE SW
S5 SEAT BELT WARNING OCCUPANT DETECTION SENSOR AND BUCKLE SW RH
B–L
To Center Airbag Sensor Assembly <17–3>
From 4WD Control ECU <18–3> <18–4>
To Combination Meter <18–2>
From Passenger Airbag Manual On–Off SW<17–1>
To Passenger Airbag Manual On–Off SW<17–2>
See Illumination System<9–3>
H10 CARGO LIGHT [HIGH MOUNTED STOP LIGHT]
W–B
W–B
J 3 JUNCTION CONNECTOR
Right kick panel
Left kick panel

M OVERALL ELECTRICAL WIRING DIAGRAM

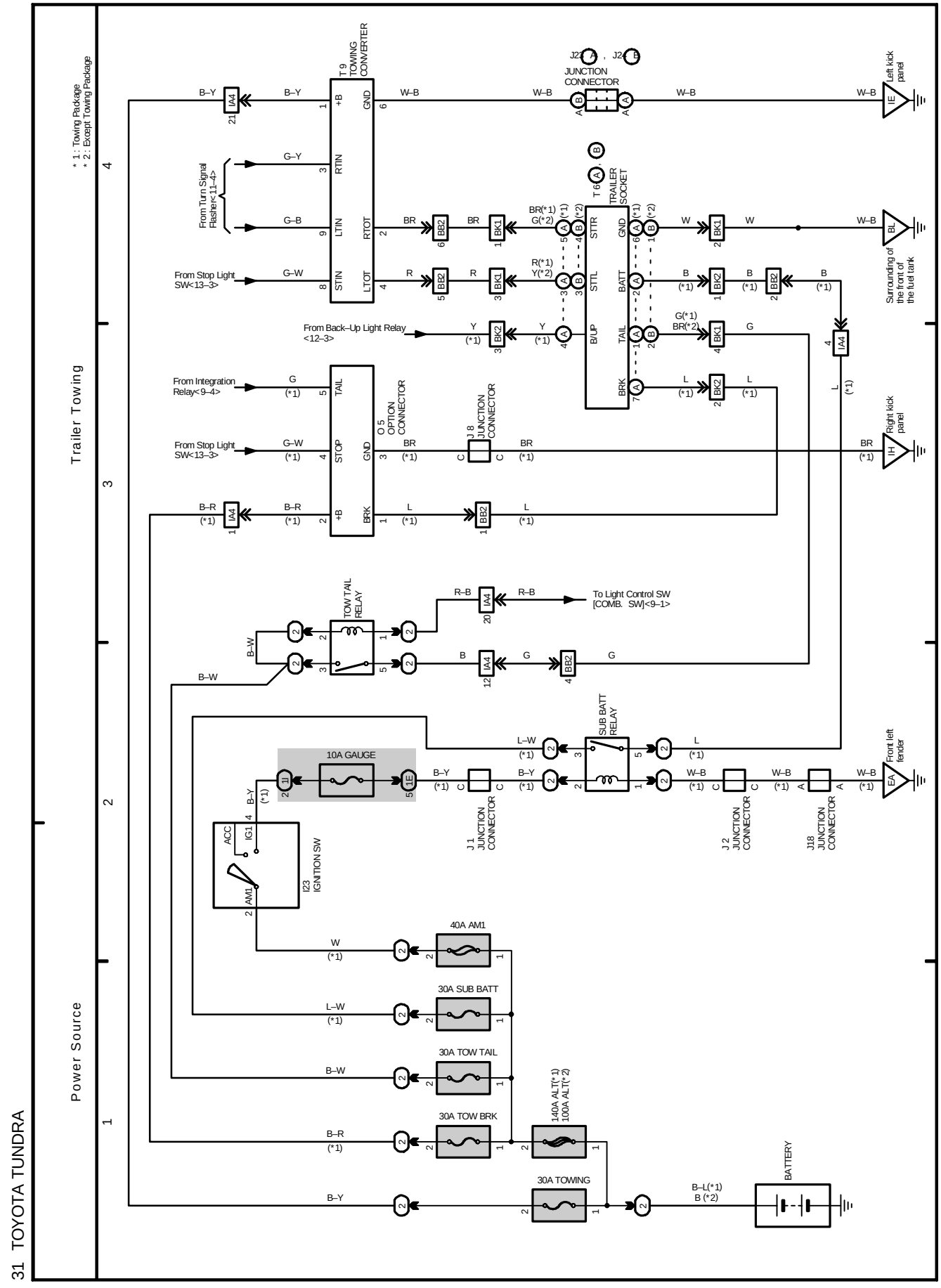

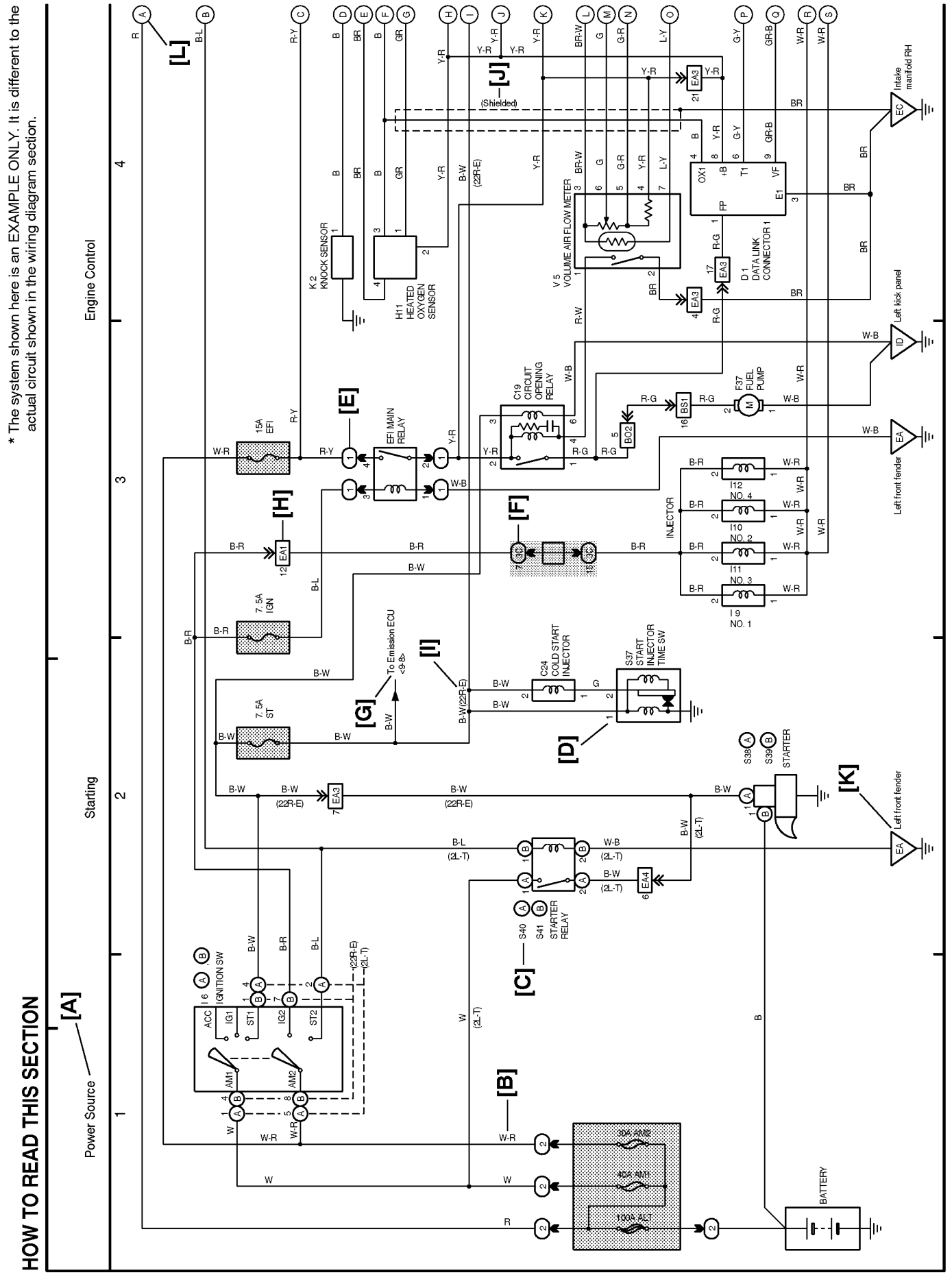
* The system shown here is an EXAMPLE ONLY. It is different to the actual circuit shown in the wiring diagram section.
HOW TO READ THIS SECTION
[A]
Power Source
Starting
Engine Control
[B]
[C]
[D]
[E]
[F]
[G]
[H]
[I]
[J]
[K]
[L]
K2 KNOCK SENSOR
H11 HEATED OXYGEN SENSOR
V5 VOLUME AIR FLOW METER
D1 DATA LINK CONNECTOR 1
C19 CIRCUIT OPENING RELAY
F37 FUEL PUMP
15A EFI
EFI MAIN RELAY
7.5A IGN
7.5A ST
INJECTOR
I12 NO. 4
I10 NO. 2
I11 NO. 3
I9 NO. 1
C24 COLD START INJECTOR
S37 START INJECTOR TIME SW
To Emission ECU <9-8>
IGNITION SW
ACC
IG1
ST1
IG2
ST2
AM1
AM2
STARTER RELAY
STARTER
BATTERY
30A AM2
40A AM1
100A ALT
Intake manifold RH
Left kick panel
Left front fender
(Shielded)
(22R-E)
(2L-T)

[A] : System Title

[B] : Indicates the wiring color.

Wire colors are indicated by an alphabetical code.

B	= Black	W	= White	BR	= Brown
L	= Blue	V	= Violet	SB	= Sky Blue
R	= Red	O	= Orange	LG	= Light Green
P	= Pink	Y	= Yellow	GR	= Gray
G	= Green				

The first letter indicates the basic wire color and the second letter indicates the color of the stripe.

Example: L – Y

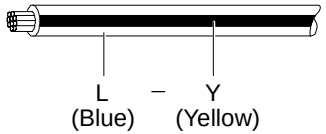

[C] : The position of the parts is the same as shown in the wiring diagram and wire routing.

[D] : Indicates the pin number of the connector. The numbering system is different for female and male connectors.

Example : Numbered in order from upper left to lower right / Numbered in order from upper right to lower left

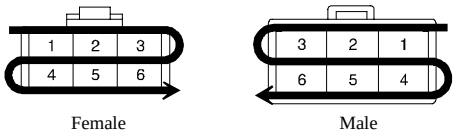

The numbering system for the overall wiring diagram is the same as above

[E] : Indicates a Relay Block. No shading is used and only the Relay Block No. is shown to distinguish it from the J/B.

Example : (1) Indicates Relay Block No.1

[F] : Junction Block (The number in the circle is the J/B No. and the connector code is shown beside it). Junction Blocks are shaded to clearly separate them from other parts.

Example:

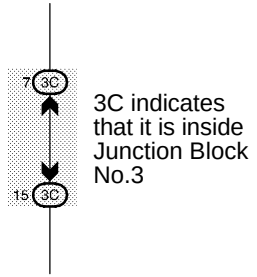

[G] : Indicates related system.

[H] : Indicates the wiring harness and wiring harness connector. The wiring harness with male terminal is shown with arrows (»). Outside numerals are pin numbers.

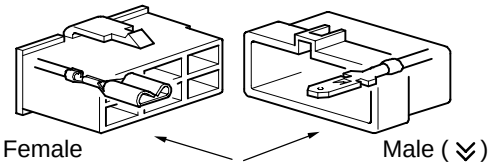

[I] : ( ) is used to indicate different wiring and connector, etc. when the vehicle model, engine type, or specification is different.

[J] : Indicates a shielded cable.



[K] : Indicates and located on ground point.

[L] : The same code occuring on the next page indicates that the wire harness is continuous.

SYSTEM INDEX

SYSTEMS	LOCATION
ABS	16–2
Air Conditioning	30–2
Back–Up Light	12–3
Cargo Light	30–8
Charging	1–4
Cigarette Lighter	24–3
Clock	24–4
Combination Meter	29–2
Cruise Control (2UZ–FE)	5–16
Cruise Control (5VZ–FE)	6–11
Door Lock Control (w/ Daytime Running Light)	20–2
Door Lock Control (w/o Daytime Running Light)	21–2
Electronically Controlled Transmission and A/T Indicator (2UZ–FE)	14–2
Electronically Controlled Transmission and A/T Indicator (5VZ–FE)	15–2
Engine Control (2UZ–FE)	5–2
Engine Control (5VZ–FE)	6–2
Fog Light (w/ Daytime Running Light)	12–2
Fog Light (w/o Daytime Running Light)	8–3
Headlight (w/ Daytime Running Light)	7–2
Headlight (w/o Daytime Running Light)	8–2
Horn	27–4
Ignition (2UZ–FE)	3–2
Ignition (5VZ–FE)	4–2
Illumination	9–3

SYSTEMS	LOCATION
Integration Control and Panel	30–6
Interior Light	10–2
Key Reminder	26–3
Light Auto Turn Off (w/ Daytime Running Light)	20–4
Light Auto Turn Off (w/o Daytime Running Light)	21–4
Mirror Heater	17–2
Power Outlet	24–2
Power Seat	25–4
Power Source	1~31–1
Power Window	22–2
Radio and Player	28–2
Remote Control Mirror	27–2
Seat Belt Warning	26–3
SRS	17–2
Starting (2UZ–FE)	2–2
Starting (5VZ–FE)	1–2
Stop Light	13–4
Taillight	9–2
Trailer Towing	31–2
Turn Signal and Hazard Warning Light	11–2
TVIP	23–2
Wiper and Washer	26–2
Wireless Door Lock Control	23–2
4WD (2UZ–FE)	18–2
4WD (5VZ–FE)	19–2